T
371
C55
1922

STANDARD LETTERING

ROY C. CLAFLIN

Class T 371
Book .C55
1922

STANDARD LETTERING

BY

ROY C. CLAFLIN

PUBLISHED BY THE

COLUMBIA SCHOOL OF DRAFTING

14TH AND T STREETS NORTHWEST

WASHINGTON, D. C.

T-371
.C55
1922

Copyright, 1916, by Roy C. Claflin

Second Edition, 1922

By Transfer
OCT 1 1924

L.C.S. 0.11 4/20

THE underlying principles in the art of lettering involve many elements which are deceptive and require careful observation.

A study of the origin of the standards of lettering discloses many interesting and instructive features. To become a master of lettering one must, to some extent at least, understand the fundamental logic of the subject. Upon making such a study we can formulate our observations into rules to be followed in practice.

Fig. 1

Fig. 2

In correct usage the upper parts of the figures 8 and 3, also of the letters Z, X, B, H, E and S, are made smaller than the lower parts. The reason for this is demonstrated in figures 1 and 2.

In figure 1 the upper and lower parts are made mechanically equal. In figure 2 the upper parts are smaller. We accept the characters of figure 2 as the correct forms because in figure 1 they appear "top heavy." We must adapt the proportions to a pleasing appearance and not to mechanical exactness.

An important factor which must be dealt with in lettering is that the human eye is not always a true discerner. A few simple well-known diagrams in addition to those of figures 1 and 2 will illustrate this point. See fig. 3.

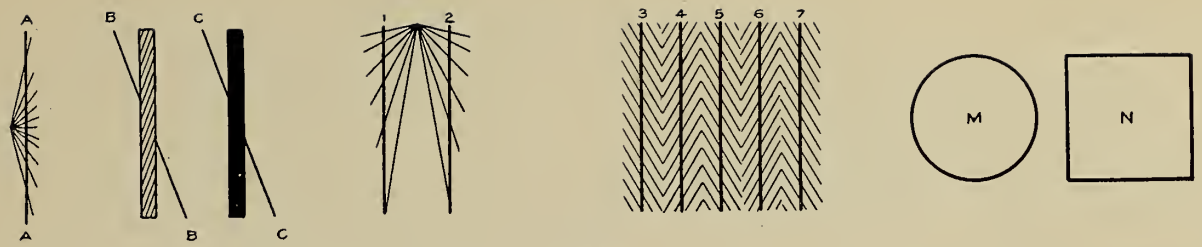

Fig. 3

Lines AA, BB, and CC are absolutely straight lines. Lines 1 and 2 are parallel with each other as also are lines 3, 4, 5, 6 and 7. Circle M is of the same diameter as square N.

These statements appear false to the eye; but they are easily proved true by test. This principle of "optical illusion" has been a great factor in the determination of the rules of lettering and in the spacing apart of letters in words.

The principle illustrated in the circle and square of the same diameter (M and N, fig. 3), makes it necessary that the "round" letters be given a greater height than the "square" letters, in order that they may all **appear** to be of a uniform height. Hence, one of our rules—

RULE 1. All curved portions of letters touching the upper or lower guide line extend beyond.

This rule applies to all styles of lettering. **A tendency to exaggerate this distance beyond the guide lines must be guarded against.**

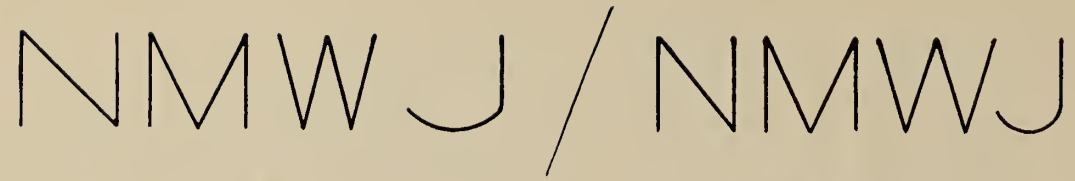

Fig. 4

Fig. 5

Mechanical equality and mechanical spacing are foreign to correct lettering. The letters of figure 4 demonstrate this. All the letters in that case are equal in width and are spaced equally apart. The trouble is obvious. Hence, the necessity of assigning different and specific widths to all letters. Figure 5 shows the same letters as in figure 4, but with their proper relative widths and spacing apart. They present, therefore, a much more satisfactory appearance. The widths assigned to the different letters are not a matter of guess-work or the product of the mind of any one person, but are the result of many years of experiment on the part of a great many individuals. There is a reason for every particular proportion of each letter which usually becomes obvious when the letter is made contrary to the correct proportion.

A very important rule in lettering which is commonly violated by the inexperienced is as follows:

RULE 2. In the letters, V, A, N, M, W, Y, K, X, and U, that is, the letters which offer a choice of direction in the light and heavy strokes, are shaded on the "down" stroke, or the stroke which slants from upper left to the lower right.

The heavy side of the "U" is easily remembered as it was originally made like the "V_2" (the present "W" being a "double U" of the old style "U"), so that it is shaded on the same side as the "V."

This rule applies not only to all styles of Roman Letters, but to all standard "shaded" letters. There is but a single case in this style in which a heavy stroke slants from **upper right to the lower left.** It is the "Z"; but as it offers no "choice" as to **which** stroke is shaded, it does not come under the rule just given.

Other rules will be formulated as we proceed with the study of the individual letters. The style of lettering first to be taken up will be the **ROMAN** letters, as that is the basic style.

We will first observe several short-cut methods which can be used to advantage in laying out letters, etc., by the use of the two triangles.

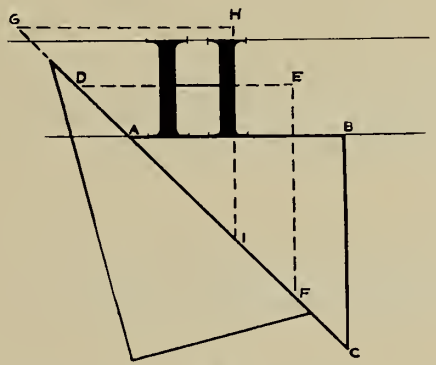

Fig. 6

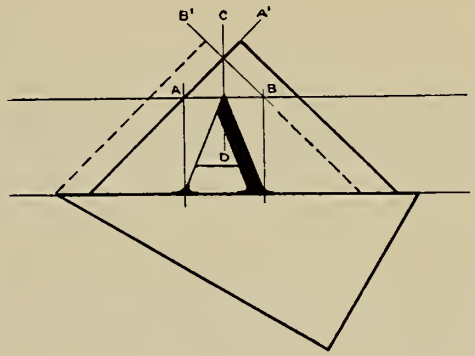

Fig. 7

Figure 6 illustrates the method of drawing **vertical and horizontal lines,** the same method being applied for drawing lines **parallel or perpendicular** to a given line at any angle. Place either triangle with its **right angle** in the position of point B, and its edge AB lying along the lower guide line (or the upper guide line could be used). Place the other triangle against the first one (usually the longest side is used—and hold it securely down against the paper with the left hand; then with the right hand slide the first triangle to the positions desired to draw horizontal lines along the edge AB as at DE, or to draw vertical lines along the edge BC as at HI. This method can be used for laying out the guide lines themselves. In that case the longest edge of the 30° triangle is preferred in the position of AB.

Figure 7 illustrates the method of bisecting a space. Lay the triangles in the positions indicated to find the center point of the letter A, for instance. With the one triangle in the dotted position draw line BB′, through point B, and in the position shown in solid lines draw line AA′ through point A. Then by turning the triangle draw line CD vertically through the intersection of lines AA′ and BB′. This line marks the midpoint between A and B.

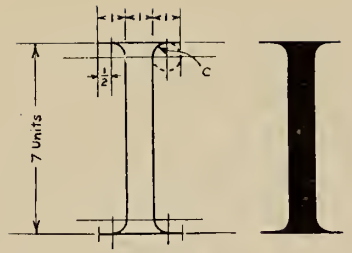

Fig. 8

ROMAN LETTERING

(Upper Case or Capitals)

Note.—The use of the terms "upper case" (capital letters) and "lower case" (small letters) originated with the printer, whose cases of type are arranged with the capitals above the cases containing the small letters.

We will study these letters not in their alphabetical order, but in their logical order according to the principles involved.

To enable us to observe the formation of each letter more conveniently we will study them in outline. The complete letter is usually filled in solid.

The height of the letter is divided into **seven equal parts,** one of these parts being taken as the **unit of measure.** (For a special scale giving these divisions, called the "Topographers' Scale," see page 43.) The thickness of the "I" and of the heavy straight strokes of the other letters is **one unit.** We will adopt "U" as the abbreviation of the unit of measure. The dimensions for the "I" are indicated in the accompanying sketch (figure 8).

The curve at C is a quarter of a circle with a radius of one-half a unit. That is, if the arc were continuous it would form a perfect circle and would be **one unit in diameter,** the center of the circle being **one-half unit** from the stem and the top line of the letter. This arc is called the "grace curve" as its purpose is to give grace to the letter.

Letters must, of course, be laid out in pencil before being inked. The pencil lines should be light and fine, made with a slender, sharp point. **Do not bear on the pencil,** as it makes it difficult to ink in and in case the position or a part of the letter is altered the original lines would be in evidence as grooves in the paper. A comparatively hard pencil should be used, depending on the nature of the surface of the paper. The finer and more clear cut the pencil lines are, the easier it is to ink in neatly and correctly.

RULE 3. Be sure the letter is correct in pencil before it is inked—leaving nothing to be corrected while inking.

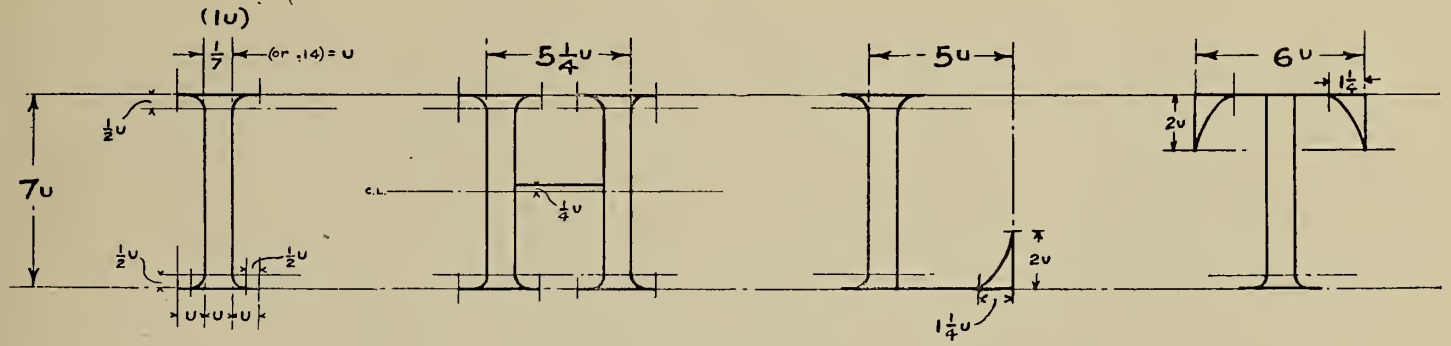

U (Unit) = $\frac{1}{7}$ height of letter.

It is advised that the entire alphabet be laid out in pencil first, one inch in height, with a special view to studying the formation of each individual letter, before attempting any ink work.

RULE 4. The straight lines may be ruled, but all curved lines must be drawn freehand.

The letter "H" is 5¼ units wide, and is formed by joining two I's with a horizontal line ¼ unit above the center of the letter. The center is found by measuring 3½ units from the top or bottom, or by bisecting the height by the use of the triangles.

The curve on the foot of the "L" is the fourth part of an **ellipse,** not a circle. The ellipse if completed would be about 4 units high.

The arms of the "T" are the same shape and size as the foot of the "L."

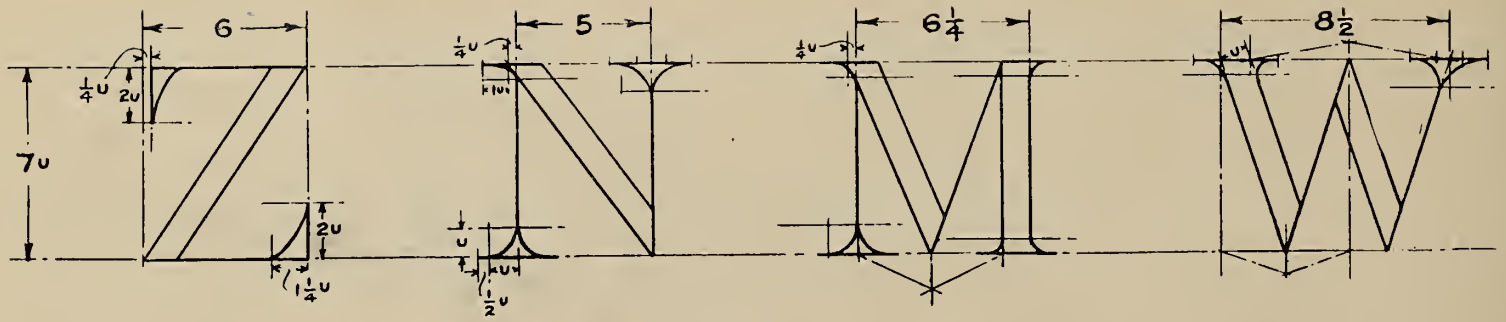

RULE 5. In laying off the heavy stroke or the stem of the "Z," its width—one unit—must be laid off at right angles. This applies also to the heavy stroke of all letters.

This is done by measuring from the upper right hand corner of the "Z" at right angles to what you can easily estimate will be the slant of the heavy stroke. Connect the point just laid off with the lower left corner of the letter and draw the other side of the heavy stroke parallel to the first line.

In the N and M, note that the lower line of the heavy slant stroke crosses the upper guide line ¼ unit to the left of the first light stroke. Also in drawing the grace curves to the light strokes of the letters note the following:

RULE 6. The grace curves on the vertical thin stroke of a letter are arcs of one unit radius joining the strokes one unit from the guide line. The projections are 1½ units on each side—three units in all.

To find the point where the middle portion of the "M" touches the lower guide line, bisect the distance from the left line of the letter to the **inside** of the heavy stroke at the right (using the triangle method). **Do not bisect the total width of the M.**

The W is a letter that has always given considerable trouble owing to the difficulty of getting the corresponding lines parallel and the angles equal. The following method, however, eliminates the difficulties entirely, and gives a perfect "W" even should the width of the letter happen to be laid out incorrectly.

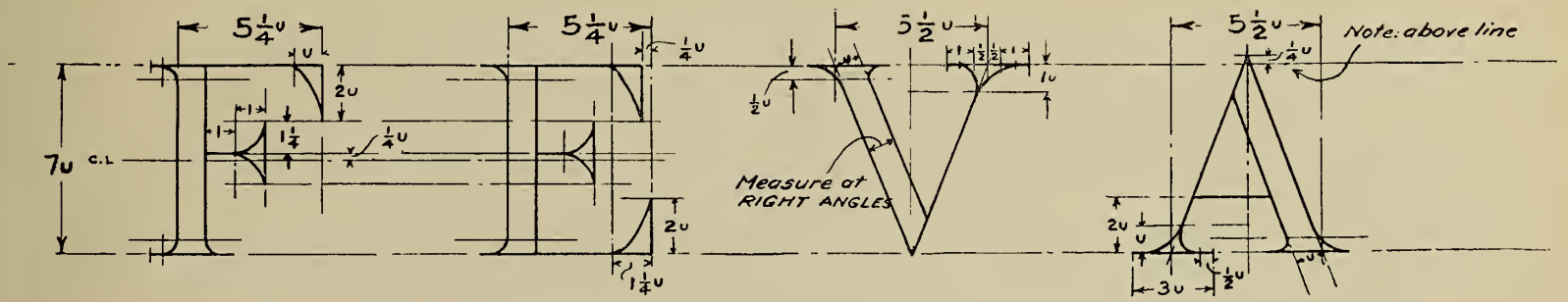

Lay off the total width. Lay off "U" on the upper guide line equal to one unit (full). Bisect the remaining width as indicated, and draw a vertical line. Bisect the space on the lower guide line as indicated. Connect the two points thus found on the upper and lower guide lines with a straight line and draw the right hand light stroke of the W parallel to it. Then draw the sides of the heavy strokes parallel to each other. This completes the W. The thickness of the second heavy stroke should be exactly one unit (measured at right angles), which is the test of the accuracy of your construction. The grace curves of the W have no specific radius in units, as is likewise the case on the **slant** strokes of the other letters.

Note in the letters F and E that the middle portion sets one-fourth of a unit above the center line ("C.L.").

Unlike the V, the point of the A projects ¼ U beyond the guide line. In the V draw the left side of the heavy stroke before laying off the unit of thickness for the other side, as this will give the correct angle at which to measure. Apply the same principle to the A.

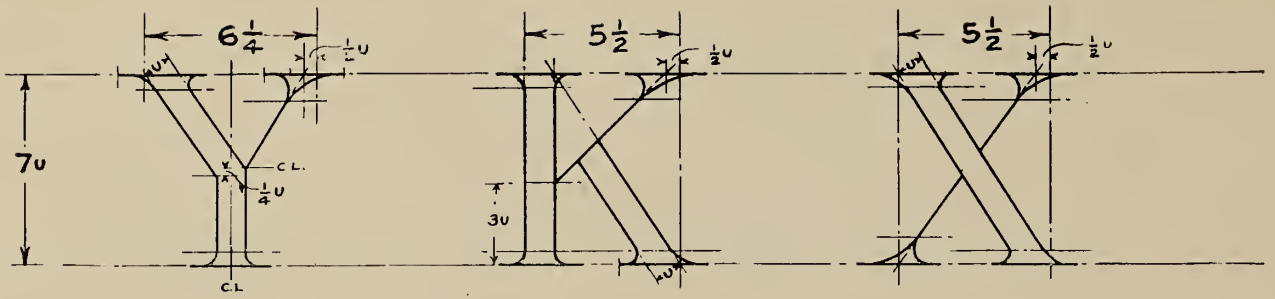

In the Y, K, and X note that the light stroke is set in ½ U at the top. This prevents the letters from appearing top heavy.

In the K, note that the outside line of the heavy slant stroke will, if produced, intersect the right side of the vertical heavy stroke at the top guide line. Draw this line before measuring the thickness of the slant stroke.

To lay off the thickness of the heavy stroke of the X, proceed as in the Z.

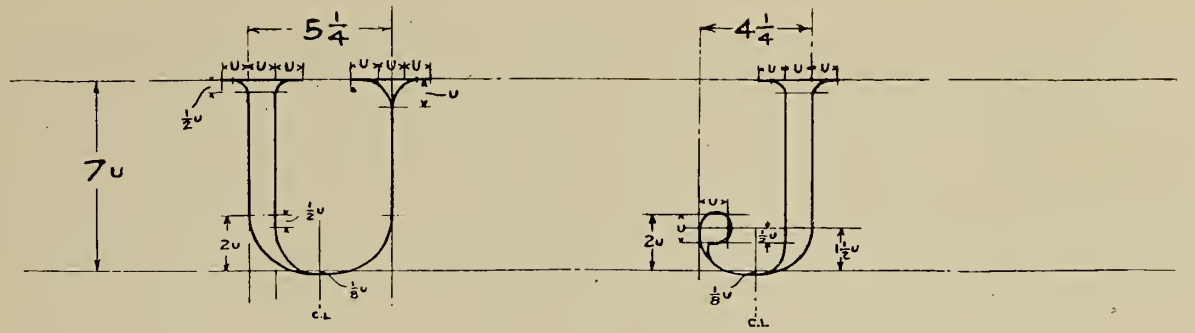

THE CURVED LETTERS

Bear in mind rules 1 and 4, that all curved portions of letters are made freehand; and that all curved portions of letters touching the guide lines extend an eighth of a unit beyond; also guard against exaggerating this distance. (In the drawings this distance is slightly exaggerated for the sake of clarity of instruction.)

Note on the heavy stroke of the U and J that the outside line starts to curve 2 U above the base line while the inside lines start to curve a half unit lower. The round portion of the J has a diameter of 1⅛ U. The thickness of the **curved stroke** of the D, and other curved letters is 1⅛ units. The reason for this added thickness is to give the **curved** heavy strokes of letters the appearance of having the same thickness as the **straight** heavy strokes. Hence our rule:

RULE 7. The curved heavy strokes of letters are drawn ⅛ U thicker than the straight heavy strokes.

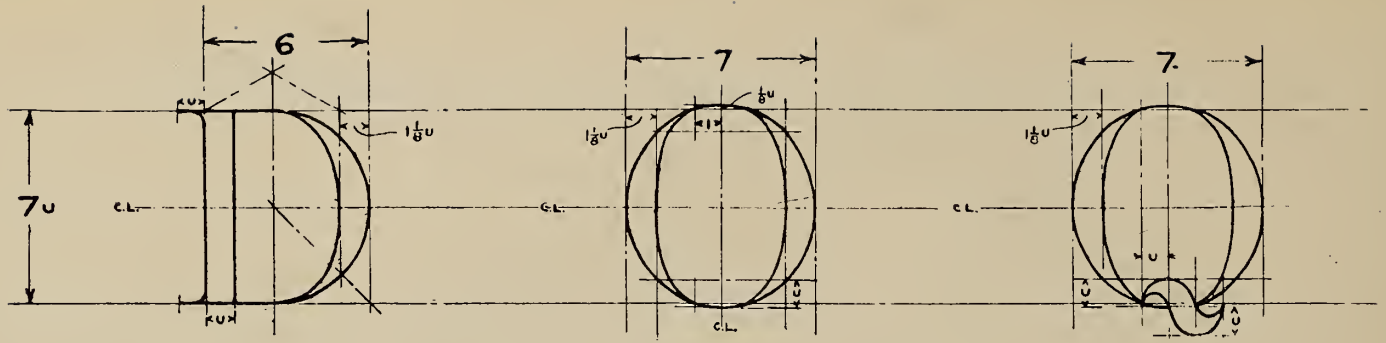

The curved part of the D starts at the line bisecting the distance between the left lines of both strokes as indicated. **Do not bisect the total width of the D.**

Figure 9 illustrates by steps the "skeleton method" of laying out the inside line of the curved stroke of the D, and the curved strokes of the other letters including the P, B, etc., which method insures symmetry and in the long run is an economy of time.

First step, draw line CD 1⅛ units from AB. 2d: bisect EG and FG at H and K, respectively (this can be done by the eye after a little practice). 3d: sketch in curves L and M. 4th: "Fatten" this portion of the letter by rounding out the hollows at L and M making the new curve continuous and tangent to CD at the mid-point, with the result as shown.

The finished letter is often left as in the 3d step, but that is a case of sacrificing, to some extent, the grace of design for the advantage of speed.

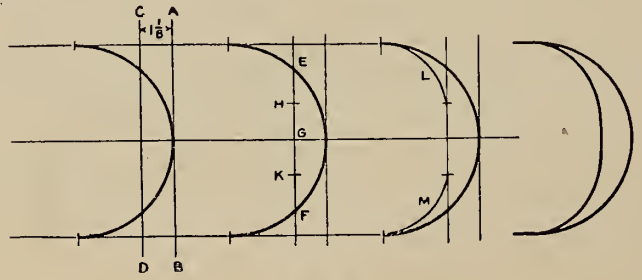

Fig. 9

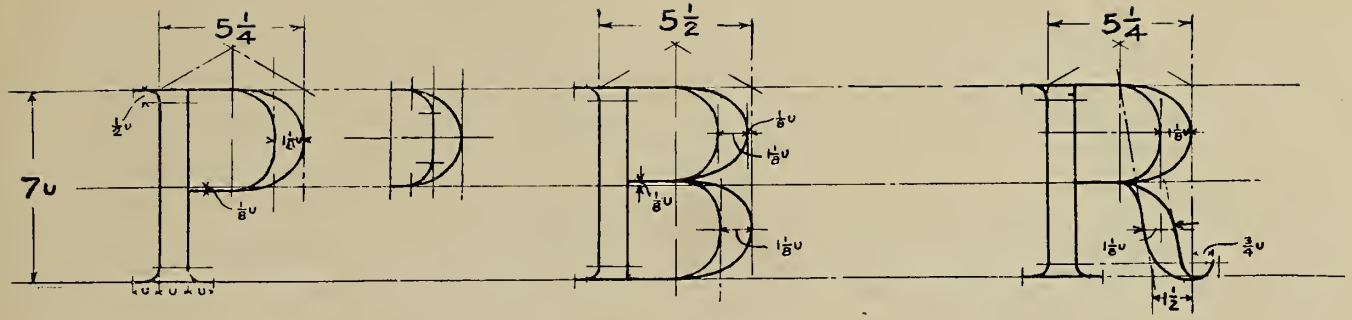

By studying the construction lines in the drawing of the O some short cuts will be discovered. For example note the points through which the outside curve of the letter passes.

The Q is the same as the O with the addition of four semi-circles, the larger two having a radius of a unit and the smaller one a radius of a half unit.

Note in the case of the P, B, and R that the middle line of the P lies **below** the center line; of the B **above;** and of the R on the center line. The curved strokes of these letters are constructed according to figure 9, except the reverse curve of the R. The left line of that stroke lies on the line which is found as indicated. Note the upper part of the B is "set in" ⅛ U. Make all the four arcs of the curved strokes of the B meet at one point on the vertical center line. This prevents the running together of the curved strokes when inked in, which would give too much blackness at the point of meeting. This principle also applies to the R.

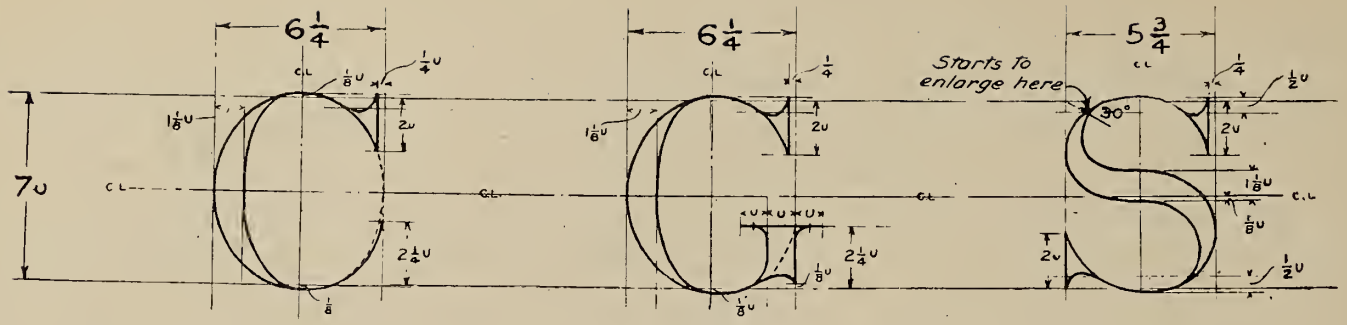

The upper parts of the C, G, and S are "set in" 1/4 U. The outline of the C, if continued as indicated by the dotted lines, would be the same as that of the O. The lower curve is "sprung out" to touch the line which determines the width of the letter.

The S is usually considered the most difficult letter of the alphabet. The method illustrated in Figure 10 reduces the drawing of that letter to its simplest elements.

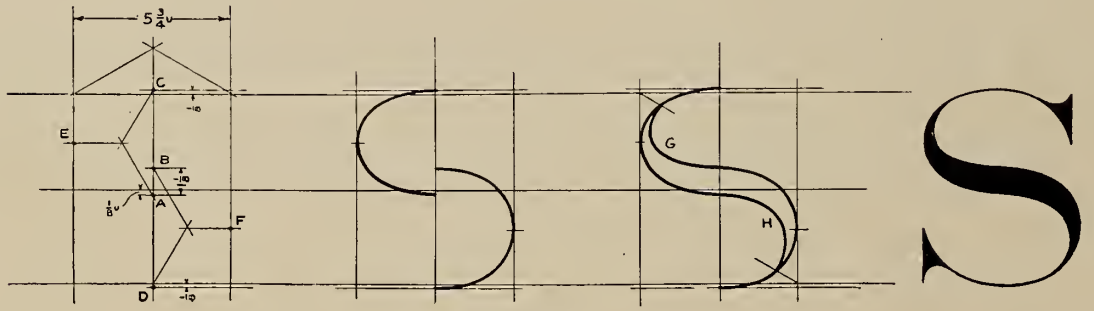

Fig. 10

The first step in drawing the S after laying out the width of the letter and drawing the vertical and horizontal center lines is to mark off a point (A) ⅛ unit below the intersection of the two center lines and a point (B) 1⅛ units above point (A). These two points determine the thickness of the heavy stroke at its widest point. Mark off points (C and D) ⅛ U above and below the upper and lower guide lines respectively. Mark off a point (E) on the left limiting line midway between the points A and C, and similarly mark off point F midway between B and D. These points can be found by the construction method indicated in the cut. After a little practice the position of these points can be determined by the eye, as can all the other points of the S.

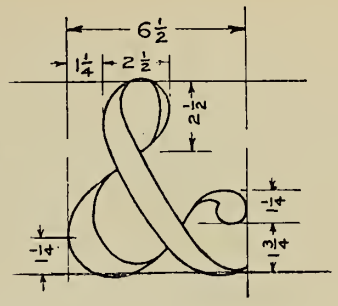

The next step is to sketch in the main curves as shown in the second view (Fig. 10), passing through the points just laid out. **These curves are not half circles,** but half ellipses. Perfect these curves by erasing and resketching where necessary.

Next, sketch in the inside curves as shown at G and H, third view, making them conform in symmetry to the outside curves, starting to enlarge the thickness of the stroke at points ½ U from each guide line, or at points found by drawing a 30° line from the near corner of the limiting lines. (These points can be estimated by the eye.) Perfect these curves and finish the letter as in the fourth view.

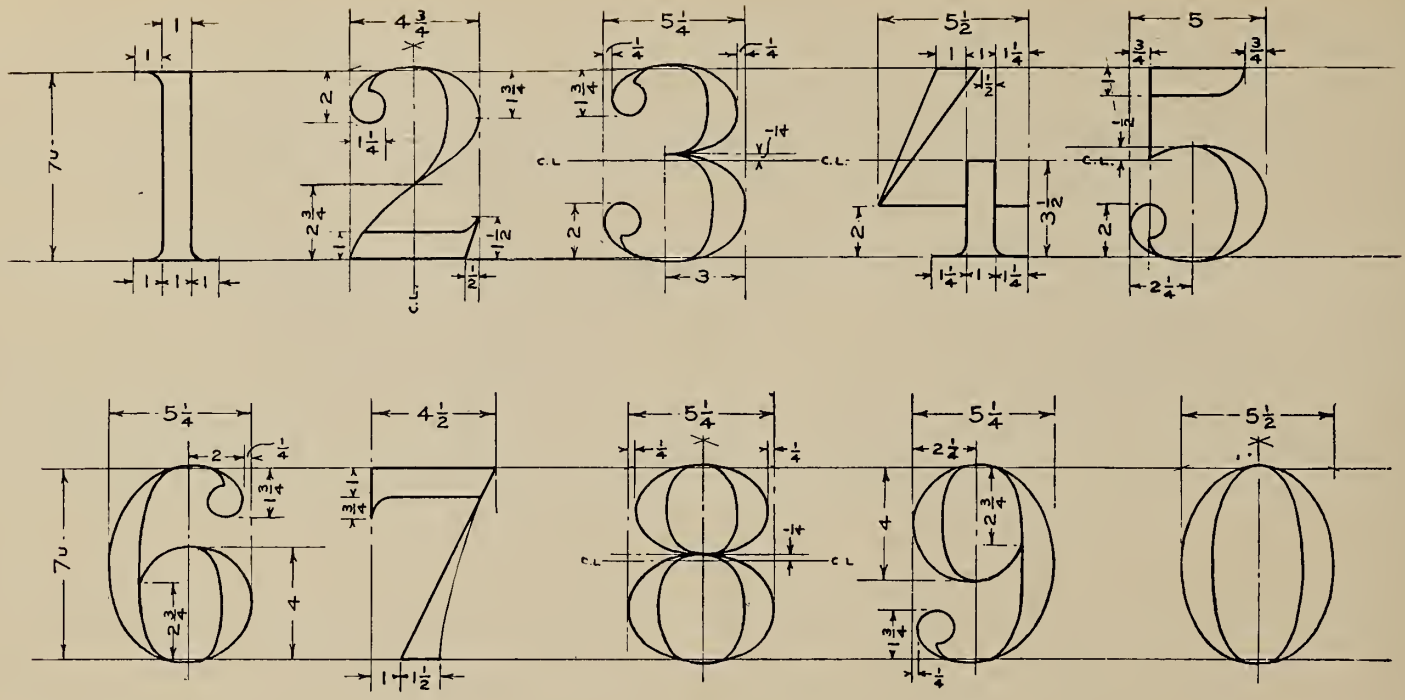

A detailed explanation of the numerals, aside from the charts, is not necessary as the notations in the drawings are self explanatory, and the proportions will be easily understood from the foregoing explanations of the Roman Letters. The principles involved are the same.

A B C D E F G H I J

K L M N O P Q

R S T U V W X Y Z

1 2 3 4 5 6 7 8 9 0 &

THE SLANT ROMAN CAPITALS

The proportions of the letters and figures of this alphabet are the same as those of the vertical Roman Capitals just preceding, and those dimensions may be followed in laying out the slant capitals.

The difference in principle between the vertical and slant letters is that the top guide line is, so to speak, moved along to the right for a distance of three-eighths (3/8) of the height of the letter. The top points of all the vertical lines move with the top guide line, the bottom points remaining stationary. This brings the formerly vertical lines to what is known as the "3 in 8" slant, being 3 parts in 8 parts. The number of degrees of this slant is approximately 21.3°. (For a special triangle giving this slant see page 44.) This is the "official" slant for lettering, adopted universally.

The directions for laying out the vertical Roman Capital letters applies in the main to the slant letters. They may be followed accordingly, making, of course, the necessary changes occasioned by the slant; for instance the radii of the grace curves will be changed.

The following is an important point to be remembered:

RULE 8. All measurements pertaining to the HEIGHT of slant Roman Capitals must be laid out VERTICALLY.

To illustrate this point, take the Y for an example. 3½ U measured up from the base line gives the center line, which establishes the point where the light stroke joins. **If this distance (3½ U) were measured on the slant it would not locate the center line,** the proper place for the light stroke to join the heavy.

It will be observed, in this connection, that the "I," for instance, is **lengthened** by being converted into a slant letter of the "same height." The height, be it remembered, is measured vertically.

The strokes which were originally **at an angle** in the vertical letters must still have their thickness **laid off at right angles.** This principle can readily be seen when applied to the Z. In many cases, however, the W for example, this question makes such a minute difference that the thickness of the heavy stroke may be laid off horizontally.

The principle of converting a vertical letter into a slant letter is graphically illustrated in the following diagram (figure 11).

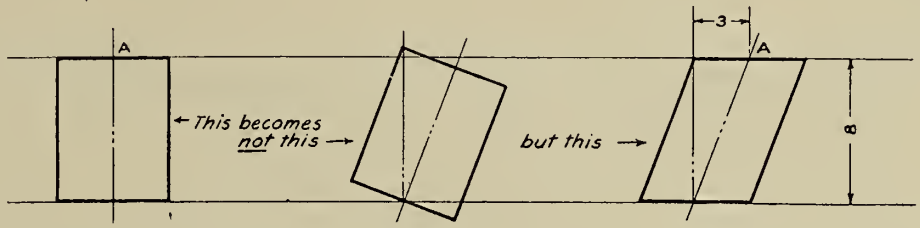

Fig 11

The letter is not "rolled along," not tilted over, but **the points move horizontally to the right** until the original vertical center line assumes a "3 in 8" slant, that is, until the point A, in the accompanying cut, has moved to the right through a distance of 3/8 of the height of the letter.

With these explanations of the general theory of the slant letter, no difficulties should be encountered.

ABCDEFGHIJ
KLMNOPQ
RSTUVWXYZ
1234567890&

LOWER CASE ROMAN LETTERS

The unit of measure for the lower case letters is one-tenth (**1/10**) of the height of the "full height" letters, that is the b, d, l, etc. The height of the short letters, the i, (excluding the dot), the v, z, etc., is three-fifths the height of the l, that is 6/10 or 6 units. The thickness of the l, i, and all **straight heavy strokes** is **one-tenth** the height of the l, or one unit. The other principles set forth in the study of the Capital letters apply here. For instance, **all curved portions touching the guide lines extend an eighth** (⅛) **unit beyond.** The regular curved heavy strokes are 1⅛ units thick. The grace curves on the heavy strokes are ½ U radius, and on the light strokes are one unit radius, etc. The similar letters of both alphabets are made according to the same methods, as in the S, W, X, etc.

The numerals for this style are the same as those of the Roman Vertical Capitals.

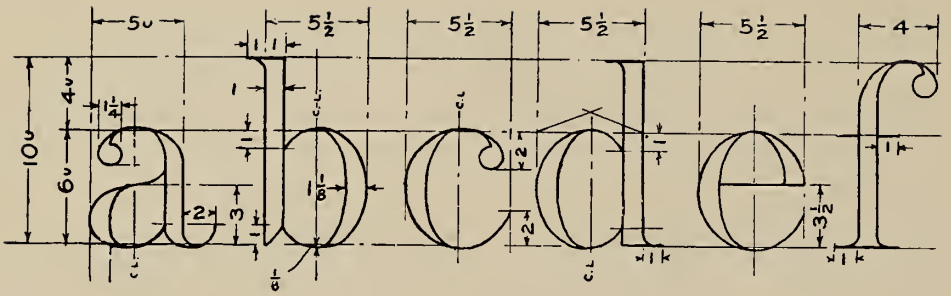
5u
5½
5½
5½
5½
4
10u
6u
4u
3
2
1
1⅛
3½
C.L.

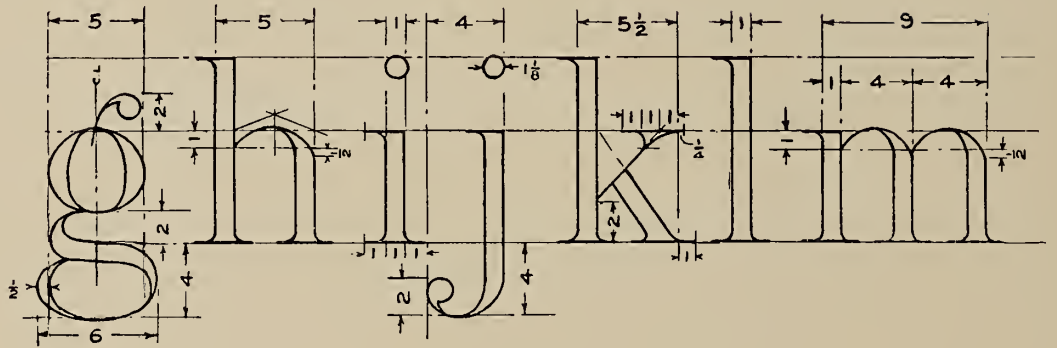
5
5
1
4
5½
1
9
1
4
4
1⅛
2
4
6
C.L.

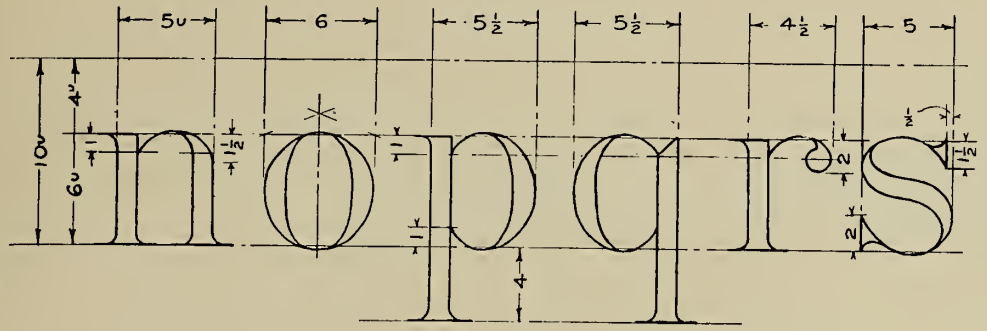
5u
6
5½
5½
4½
5
10u
6u
4"
4
2
2

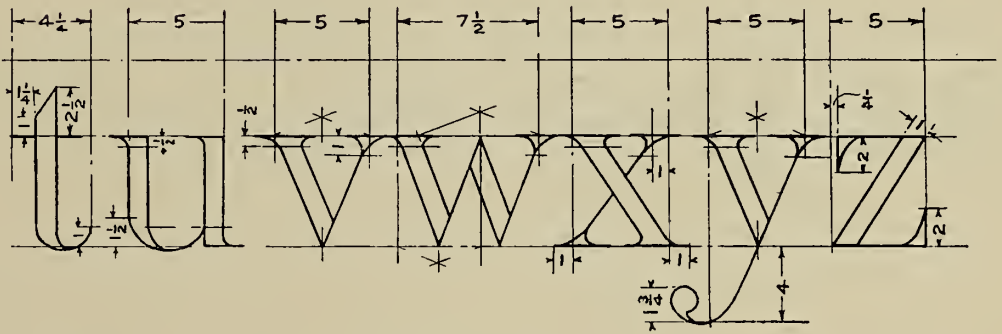
4¼
5
5
7½
5
5
5
2½
4
2
2

abcdefghijklm

nopqrstuvwxyz

GOTHIC LETTERING—VERTICAL CAPITALS

(Sometimes called Egyptian or Block Letters)

The unit of measure of the Gothic Letter is one-seventh (1/7) of the height. The thickness of all strokes is one unit, **the curved strokes being the same thickness as the straight.**

The accompanying diagrams give all the necessary information for laying out the letters.

GOTHIC LETTERING—SLANT CAPITALS

The slant for the Gothic letter is the same as for all slant lettering, that is "3 in 8," and the unit of measure again is one-seventh (1/7) of the height. See the diagrams, pp. 30 and 31.

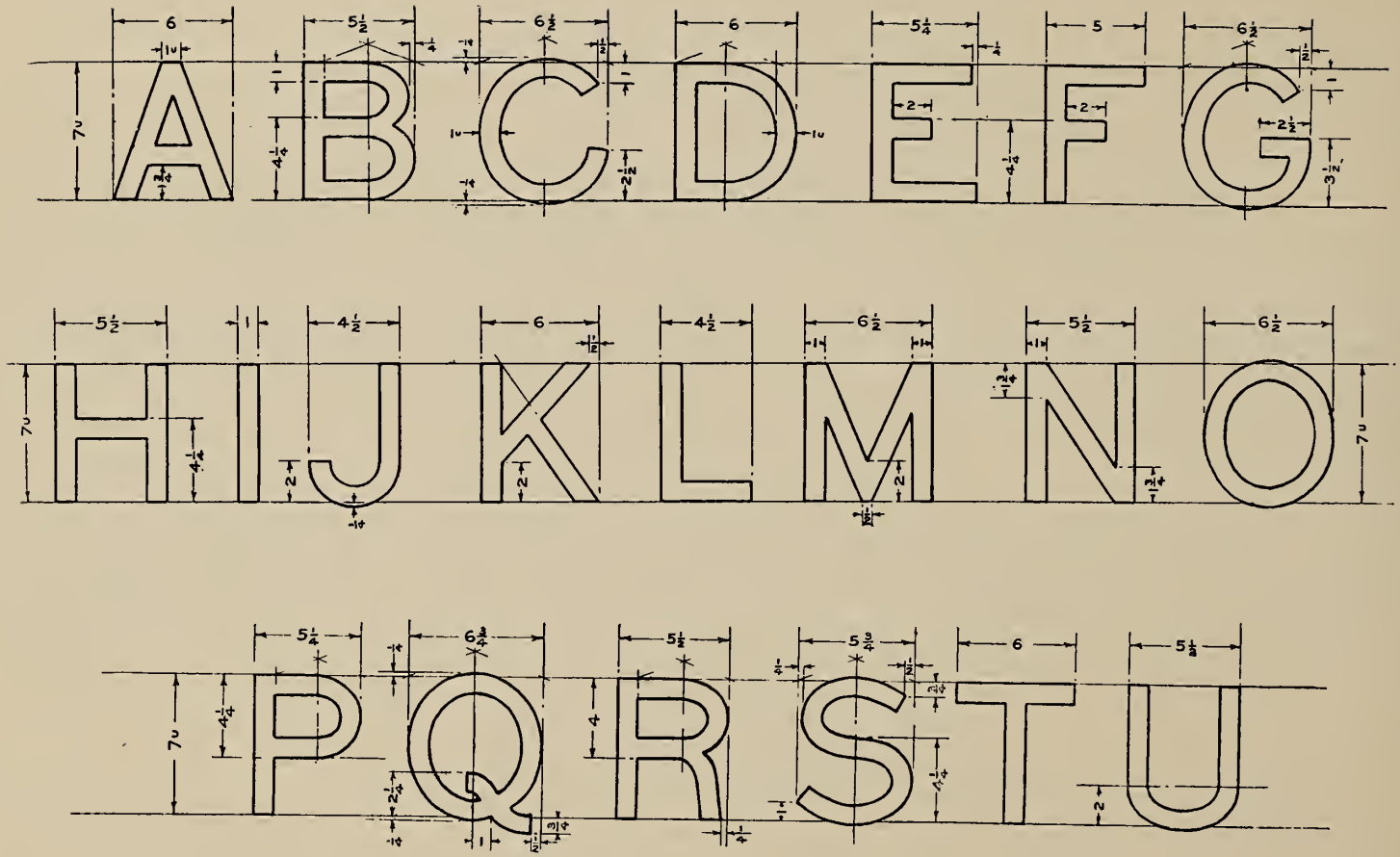
A B C D E F G
H I J K L M N O
P Q R S T U

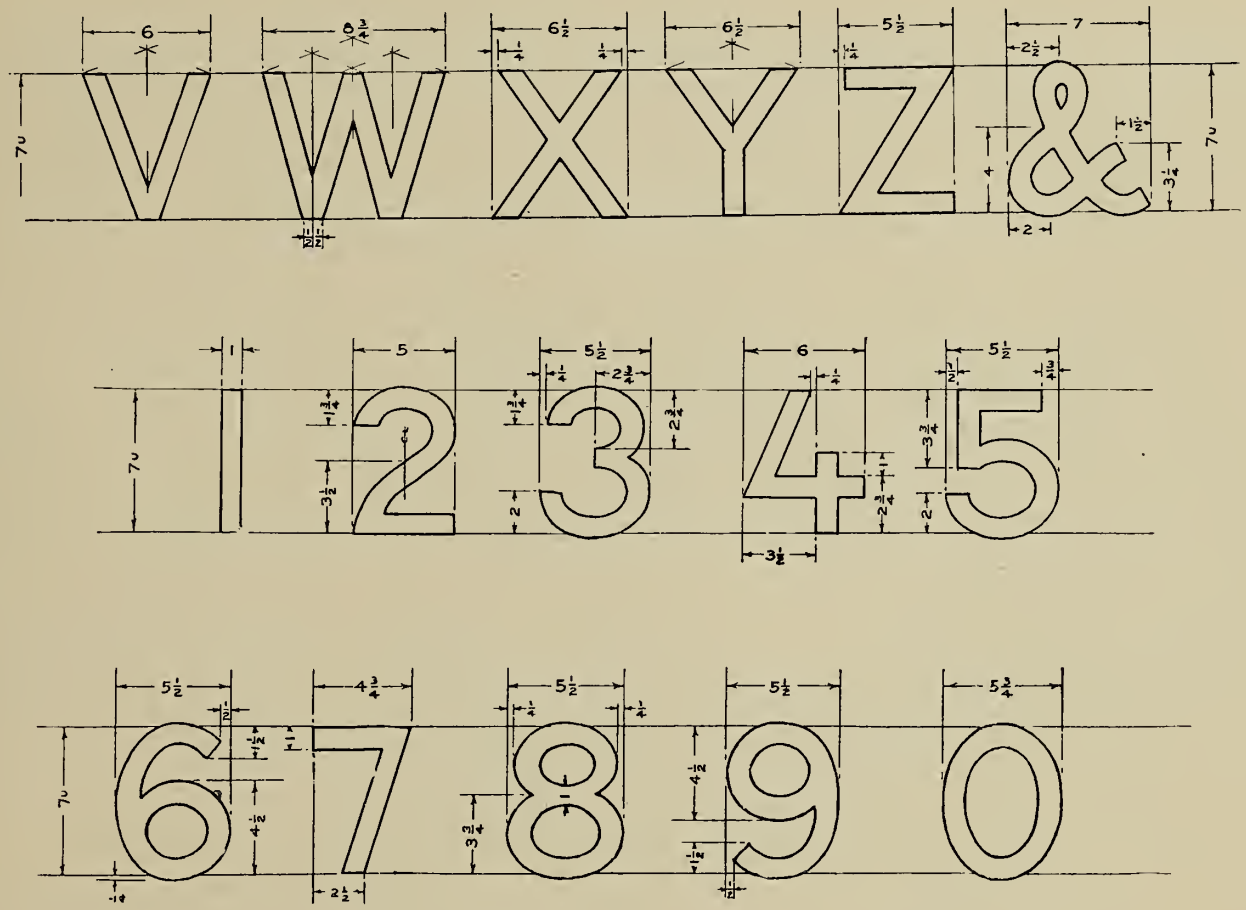
V W X Y Z &
1 2 3 4 5
6 7 8 9 0

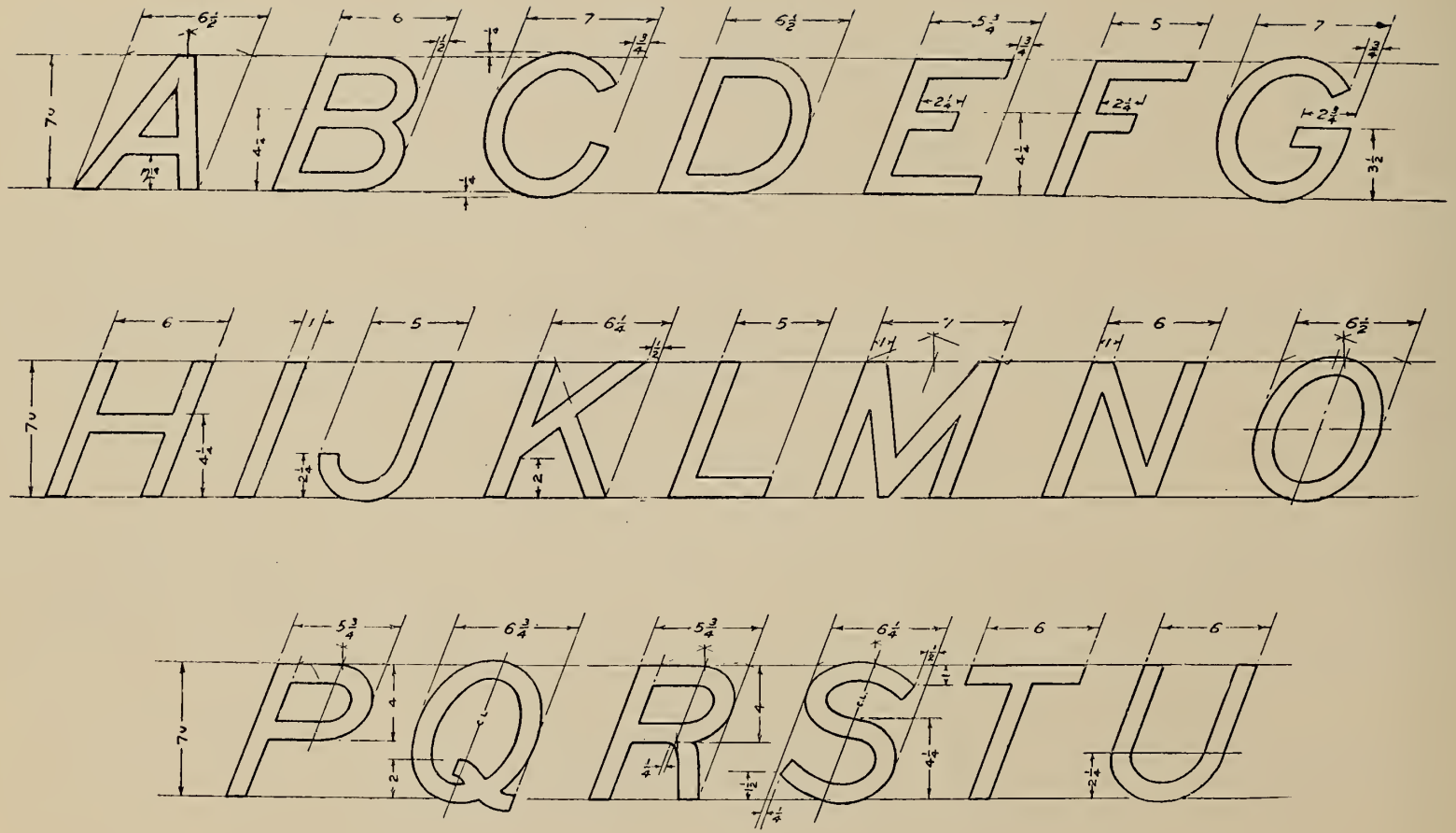
A
B
C
D
E
F
G
H
I
J
K
L
M
N
O
P
Q
R
S
T
U

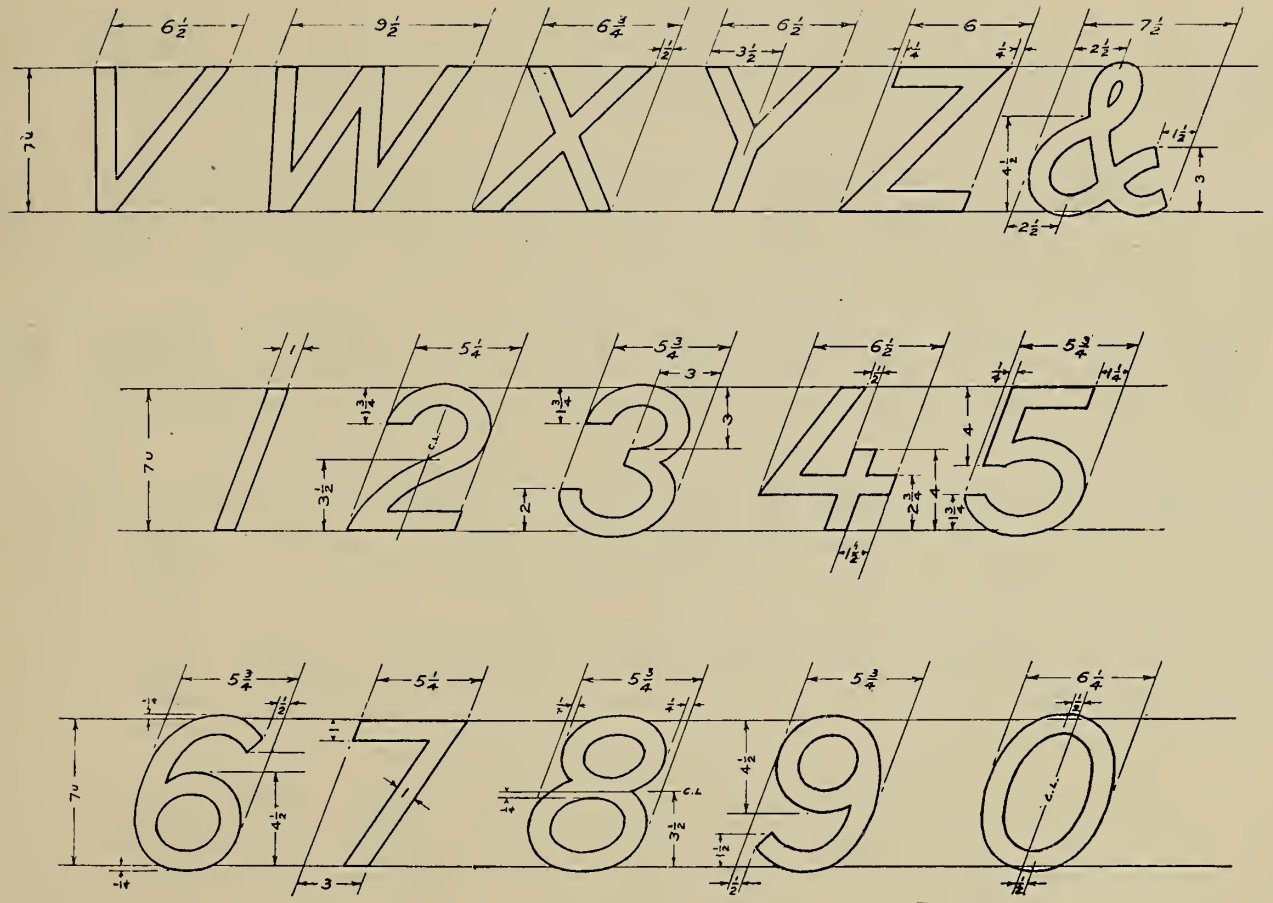
V W X Y Z &
1 2 3 4 5
6 7 8 9 0

A B C D E F G H I J K L M N O

P Q R S T U V W X Y Z &

A B C D E F G H I J K L M N O

P Q R S T U V W X Y Z &

1 2 3 4 5 6 7 8 9 0

1 2 3 4 5 6 7 8 9 0

ITALIC LETTERING—LOWER CASE

The unit of measure for the Italic letter is one-tenth (1/10) of the height, as is the case with the vertical lower case Roman. The straight strokes are one unit thick while the curved strokes such as in the c, o, etc., are 1⅛ units thick. When this style is made very small it may be done as a one-stroke letter, greater pressure being exerted for the heavy stroke. In making this as a purely free-hand letter, care must be exercised to get the "3 in 8" strokes parallel in order to present the best appearance.

OLD ENGLISH

See page 36

The cut of the "Old English" letters is presented not as a standard style, as there are a great many good styles of Old English lettering. This is only one of them.

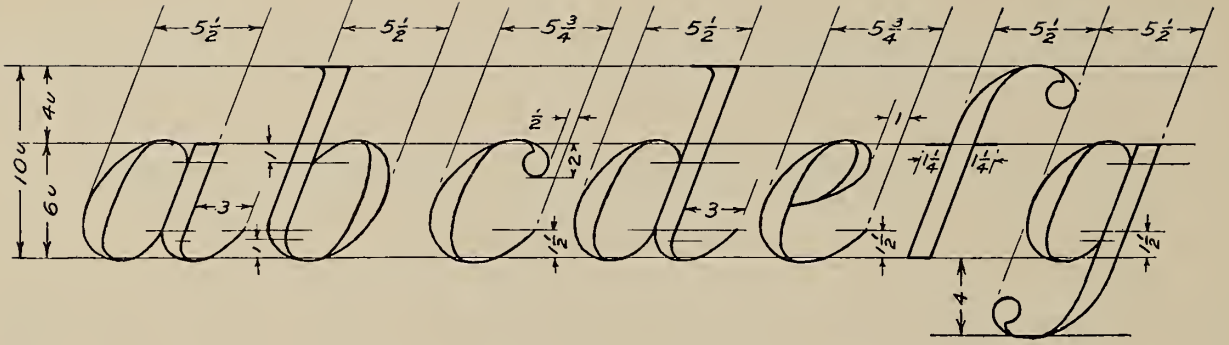
5½ 5½ 5¾ 5½ 5¾ 5½ 5½
10u 4u 6u
abcdefg

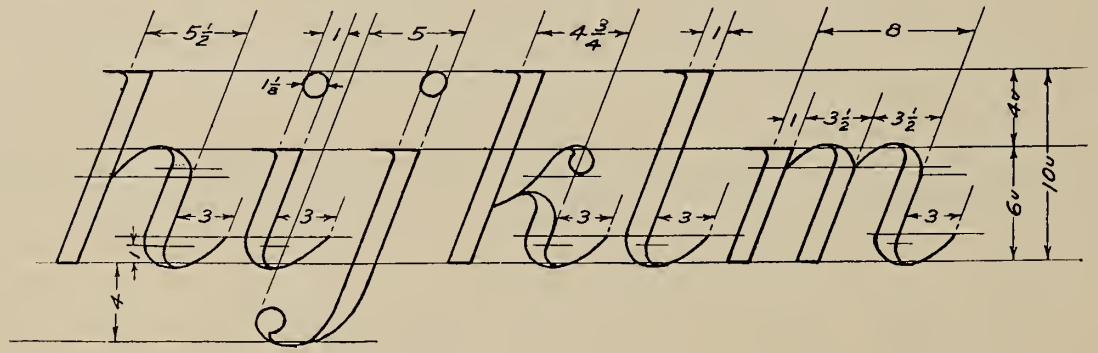
5½ 1 5 4¾ 1 8
hijklm

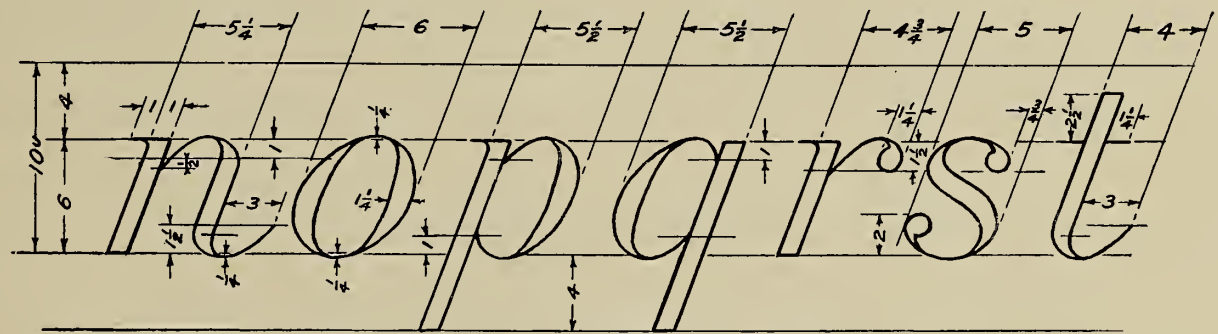
5¼
6
5½
5½
4¾
5
4
10
4
6
3
4
2

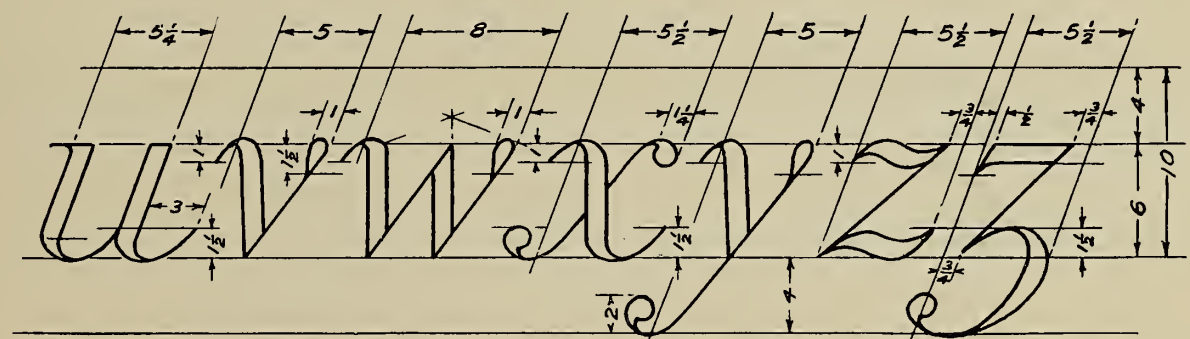
5¼
5
8
5½
5
5½
5½
4
10
6
3
4
2

abcdefghijklmnopqrstuvwxyzz

Old English

A B C D E F G H I J K L M
N O P Q R S T U V W X Y Z
a b c d e f g h i j k l m n o p q r
s t u v w x y z

TABLES OF WIDTHS

For handy reference the following tables are given showing the widths in units of the various letters and numerals.

ROMAN CAPITALS Unit = 1–7										
1	4¼	5	5¼	5½	5¾	6	6¼	6½	7	8½
I	J	L N	H F E U P R	V A K X B	S	T Z D	M Y C G	&	O Q	W

ITALIC—LOWER CASE Unit = 1-10								
1	4	4¾	5	5¼	5½	5¾	6	8
i *l*	*t*	*k* *r*	*j* *s* *v* *y*	*n* *u*	*a b d* *f g h* *p q x* *z*	*c* *e*	*o*	*m* *w*

LOWER CASE—ROMAN Unit = 1–10								
1	4	4¼	4½	5	5½	6	7½	9
i l	f j	t	r	a g h n s u v x y z	b c d e k p q	o	w	m

NUMERALS—ROMAN Unit = 1–7					
1	4½	4¾	5	5¼	5½
1	7	2	5	3 6 8 9	4 0

TABLES OF WIDTHS (*Continued*)

VERTICAL GOTHIC CAPITALS Unit=1–7										
1	4½	5	5¼	5½	5¾	6	6½	6¾	7	8¾
I	J L	F	E P	B H N R U Z	S	A D K T V	C G M O X Y	Q	&	W

SLANT GOTHIC CAPITALS Unit=1–7									
1	5	5¾	6	6¼	6½	6¾	7	7½	9½
I	F J L	E P R	B H N T U Z	K S	A D O V Y	Q X	C G M	&	W

VERTICAL GOTHIC NUMERALS Unit=1–7					
1	4¾	5	5½	5¾	6
1	7	2	3 5 6 8 9	0	4

SLANT GOTHIC NUMERALS Unit=1–7				
1	5¼	5¾	6¼	6½
1	2 7	3 5 6 8 9	0	4

SPACING

The "science" of correct spacing has always been an elusive subject. In fact it has never been reduced to a science but remains an art. Many attempts, and some of them clever, have been made to provide a rule or set of rules whereby letters can be automatically spaced in forming words and appear to be equidistant from each other.

The ideal to be reached, of course, is that **the individual letters shall appear uniformly spaced**. Of the many attempts to do this "mechanically" none of them so far have succeeded. It has proved as perplexing and futile a task as the solution of the problem of perpetual motion, and will probably never be solved for the same reason. The reason, too, is obvious.

If we were dealing in similarly shaped characters the problem would be easy. But practically every letter having an entirely different shape and on account of the infinite number of combinations in which we are called upon to place the letters, there can be but one rule for spacing and that is a simple one—**The eye** is the rule.

As the eye must be the final judge, and as the letters in a word must all **appear** to be equally spaced apart, though they **can not** be so mechanically, the surest and shortest cut to correct spacing is to satisfy the eye at the start in the "blocking out" of the letters. Refer to figures 4 and 5, page 6, for a graphic illustration of the fundamental principle involved in spacing.

A few general observations here will be helpful. One should not refer to lettering printed from type as a model for spacing. While some careful typesetting can present the effect of correct spacing, it is usually not practicable, and often impossible. The following is an example. In the word

MILTON MILTON

either in the Gothic or Roman Capitals it is not possible to have the space between the L and T appear equal to the other spaces unless the whole word should be spaced out more than the regular run of the composition, which would be just as bad.

In hand lettering a greater flexibility is possible. In the case of the L and T in the word "MILTON," for example, the arm of the T can be placed directly over the foot of the L or they can be made to overlap if necessary to insure a uniform appearance in the spacing.

Another common difficulty in spacing is encountered in the word LAW.

In hand lettering the base of the L is usually shortened, as is the foot of the A, in order to place the two letters as close together as possible, thus reducing the intervening space to a minimum.

The chief thing to bear in mind in spacing is to keep the areas of the spaces between the letters as apparently equal as possible.

There being so many different shapes to these spaces is another reason why a satisfactory "automatic" system of spacing has not been possible.

Another element to be considered in spacing is the **character of the adjoining strokes.** For example, in the combination HI two heavy straight strokes come together; in NM two light strokes adjoin; in IM a heavy and a light stroke adjoin; DO, two heavy curved strokes; ON, a curved and a light stroke; DI, curved and straight heavy stroke; and there are numerous other combinations of strokes.

Two heavy strokes must be spaced farther apart then two light strokes, which in turn must be closer spaced than a light and heavy stroke.

The shapes and positions of the adjoining strokes must also be considered. Note these examples: JUJ; LAL; LIL; AVR; CVC; IEX; KXE; OPO; TVA; YVZ. It will be observed that the relative position of the strokes is an important factor. It is obvious that the "J and U" must be spaced farther apart than the "U and J"; same with the LA and AL, and so on, because of the difference in the shapes and positions of the various adjoining strokes.

Finally, each factor controlling the spacing is not considered individually. But the eye instinctively takes all these factors into consideration at a glance. **The space between the letters of a word is determined by the placing of the first two letters. After that each letter must be blocked in lightly in pencil at such a space from the preceding letter as will "balance" with the preceding space.**

The importance of correct spacing must not be underestimated. The effect of good lettering may be injured by poor spacing.

MARGINAL LETTERING (For Map Work).

ABCDEFGHIJKLMNOPQRSTUVWXYZ

abcdefghijklmnopqrstuvwxyz

OTHER STYLES OF ONE-STROKE LETTERS
For Rapid Work

ABCDEFGHIJKLMNOPQRSTUVWXYZ

ABCDEFGHIJKLMNOPQRSTUVWXYZ

abcdefghijklmnopqrstuvwxyz

1234567890 *1234567890*

The Topographers' Scale

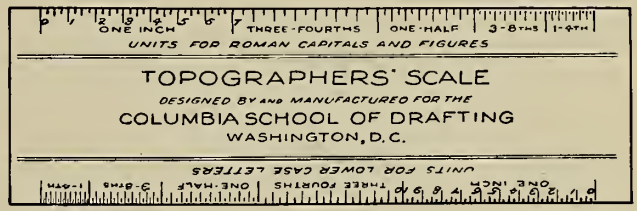

In standard lettering, as used in Topographic Drafting, the capital letters are laid out in "units" one-seventh the height of the letters. As ordinary scales do not provide this unusual division of the inch, three-quarter inch, etc., a special scale has been devised and is now manufactured, giving **seventh divisions** for various heights of letters. On the opposite edge the **tenth units** are given for the lower case letters.

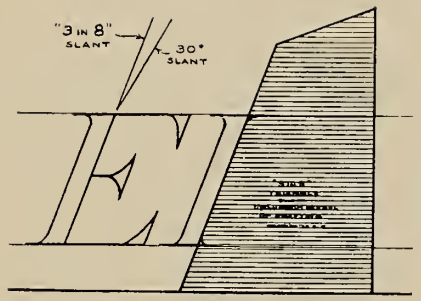

The "3 in 8" Triangle

The correct slant for lettering is three parts in eight, or approximately 21.3°. A thirty degree slant is sometimes used because the 30° triangle is handy, but that slant is incorrect.

The "3 in 8" triangle supplies the need. It has been designed by and is manufactured for the Columbia School of Drafting, Washington, D. C.

LIBRARY OF CONGRESS
0 019 934 524 2