DECLASSIFIED E.O. 12065 SECTION 3-402 / NNDG NO. 775015

SRS - [redacted] - SCAP

ROUTING SLIP JUL 16 1948

Date

M/C Log No. 18

| To | Initials | | For | |
|---|---|---|---|---|
| Chief | | | Action | |
| Executive | 1 | | Comment/Concur | |
| Personnel | | | Note-Return | |
| Radio | | | Dispatch | |
| Editorial | | | Info | |
| Statistics | | | File | 2 |
| Admin. | 2 | | Initials | |
| Historical | | | Signature | |
| Library | | | Suspense Slip to Library | |

Remarks:

Capt Beard,
Check on
See attached
note JBR
OK EGB

(Adm: #2 - 6 Aug 47)

DECLASSIFIED E.O. 12065 SECTION 3-402 / NNDG NO. 775015

SRS

GENERAL HEADQUARTERS
FAR EAST COMMAND
APO 500

AG 400 (20 Jan 48) GD 15 July 1948

SUBJECT: Supply Discipline

TO: Commanding General, Eighth Army, APO 343
Commanding General, United States Army Forces in Korea, APO 235
Commanding General, Philippines-Ryukyus Command, APO 707
Commanding General, Marianas-Bonins Command, APO 246
Commanding General, Far East Air Forces, APO 925
Commanding General, Headquarters and Service Group, General Headquarters, Far East Command, APO 500

Letter General Headquarters, Far East Command, AG 400 (20 Jan 48)GD, subject: Supply Discipline, 20 January 1948 is amended to add:

5. Letter General Headquarters, United States Army Forces, Pacific, AG 400.8 (13 June 46) GD, subject: Conservation of Supplies and Equipment, 13 June 46, is rescinded.

BY COMMAND OF GENERAL MacARTHUR:

MAILED 16 30 JUL 1948 GHQ

R. M. LEVY,
Colonel, AGD,
Adjutant General.

(31)

DECLASSIFIED E.O. 12065 SECTION 3-402 / NNDG NO. 775015

14 July 1948

To: Executive Officer

For info.

Admin. Div.

DECLASSIFIED E.O. 12065 SECTION 3-402 / NNDG NO. 775015

14 July 1948

TO: SUPPLY OFFICER

SUBJECT: Inventory of serial-numbered Office Equipment assigned to SRS.

TYPEWRITER, portable, w/carrying case, Remington, # NH164841 in use by Mr. McDonald at his Billet.

All other machines within Section and accounted for.

S/Sgt. Edward McGee

Supply Sergeant

(30)

DECLASSIFIED E.O. 12065 SECTION 3-402 / NNDG NO. 775015

RICHARD J. MARSHALL
Major General, General Staff Corps,
Chief of Staff.

OFFICIAL:

B. M. FITCH,
Brigadier General, AGD,
Adjutant General.

DECLASSIFIED E.O. 12065 SECTION 3-402 / NNDG NO. 775015

10 July 41

To: Capt Beard

For info.

OK
JBR

Admin Dir

DECLASSIFIED E.O. 12065 SECTION 3-402 / NNDG NO. 775015

9 July 1948.

Weekly Inventory of INK, drawing, CEMENT, rubber and PEN, LeRoy

| | Nomenclature | Balance Last Week | Received | Issued | Balance on Hand |
|---|---|---|---|---|---|
| 1. | INK, drawing, black, 2 oz. btl. | 22 | 0 | 1 | 21 |
| 2. | INK, drawing, black, 3/4 oz. btl. | 25 | 0 | 2 | 23 |
| 3. | INK, drawing, white, 3/4 oz. btl. | 22 | 0 | 0 | 22 |
| 4. | CEMENT, rubber | 11 qt | 0 | 1/2 qt | 10½ qt |
| 5. | PEN, LeRoy, #00 | 9 | 0 | 0 | 9 |
| | 0 | 22 | 0 | 0 | 22 |
| | 1 | 25 | 0 | 1 | 24 |
| | 2 | 34 | 0 | 0 | 34 |
| | 3 | 22 | 0 | 0 | 22 |
| | 4 | 34 | 0 | 0 | 34 |
| | 5 | 32 | 0 | 0 | 32 |
| | 6 | 27 | 0 | 0 | 27 |
| | 7 | 28 | 0 | 0 | 28 |
| | 8 | 30 | 0 | 0 | 30 |
| | 9 | 11 | 0 | 0 | 11 |
| | 10 | 11 | 0 | 0 | 11 |

* * * * * * * * * * * * * * * * * * * * * * *

DECLASSIFIED E.O. 12065 SECTION 3-402 / NNDG NO. 775015

Juveniles

| | |
|---|---|
| Larceny | 42 |
| Illegal possession of U.S. property | 7 |
| Trespassing into military reservation | 12 |
| Bartering | 3 |
| Violation of ceiling prices | 2 |
| Total | 66 |

ARRESTS IN NORTHERN RYUKYUS
March

| | |
|---|---|
| Fraud | 7 |
| Larceny | 34 |
| Assault | 7 |
| Gambling | 10 |
| Illegal abortion | 3 |
| Violation of M.G. Proclamation | 32 |
| Accidental fire | 2 |
| Coercion | 5 |
| Usurpation | 4 |
| Negligent homicide | 1 |
| Injury resulting in death | 1 |
| Total | 106 |

ARRESTS IN SOUTHERN RYUKYUS
March

| | |
|---|---|
| Larceny | 8 |
| Violation of proclamation | 3 |
| Blackmarketing | 1 |
| Miscellaneous crimes | 8 |
| Total | 20 |

Illegal Entry

5. Blackmarketing between the Northern Ryukyus and Japan has stopped almost entirely. The stormy condition of the sea at this season of the year and the constant efforts made by the Water Police Patrol throughout the Northern Ryukyus at such locations where these activities have been most prevalent continue to keep illegal transactions at a low level.

POLICE

6. The police organization of the Northern Ryukyus was reduced to 249 officers and men due to the dismissal of one policeman for malfeasance in office and the retirement of two others. No appointments were made to fill these vacancies.

DECLASSIFIED E.O. 12065 SECTION 3-402 / NNDG NO. 775015

T.o Enc 9.

7 July

For my part

admin Dw

DECLASSIFIED E.O. 12065 SECTION 3-402 / NNDG NO. 775015

6 July 1948.

TO: SUPPLY OFFICER

SUBJECT: Inventory of serial-numbered Office Equipment assigned to SRS.

TYPEWRITER, portable, w/carrying case, Remington, # N1164841 in use by Mr. McDonald at his Billet.

All other machines within Section and accounted for.

S/Sgt. Ernest Meyers

Supply Sergeant

(4)

DECLASSIFIED E.O. 12065 SECTION 3-402 / NNDG NO. 775015

LIVESTOCK TREND - OKINAWA GUNTO
March

| Animal | Births | Deaths | Slaughtered | Present Population | |
|---|---|---|---|---|---|
| Cattle | 7 | 2 | 0 | 3,288 | |
| Horses | 0 | 4 | 0 | 2,706 | a/ |
| Swine | 287 | 54 | 211 | 17,186 | b/ |
| Goats | 171 | 6 | 0 | 11,523 | |
| Poultry | 7,921 | 500 | 0 | 59,249 | |
| Rabbits | 667 | 0 | 50 | 5,708 | |

a/ The 96 horses which were reported as losses in January have been accounted for and are shown as gains for Okinawa. In addition 55 horses were imported to Okinawa from outlying islands during March.

b/ Seven swine were exported from Okinawa; four to the Daitos Islands and three to Amami O-Shima, Northern Ryukyus.

Miyako exported 191 pigs and 11 goats to Yaeyama in March.

During the war 90 percent of the livestock population in Okinawa Gunto was destroyed and as a result an important source of fertilizer was lost. The importance of increasing the animal population in the Ryukyus to increase both soil fertility and production cannot be over-emphasized.

DECLASSIFIED E.O. 12065 SECTION 3-402 / NNDG NO. 775015

To: Exec O. - for sig

29 June 1948

TO: SUPPLY OFFICER

SUBJECT: Inventory of serial-numbered Office Equipment assigned to SRS.

TYPEWRITER, portable, w/carrying case, Remington, # N1164841 in use by Mr. McDonald at his Billet.

The four (4) machines listed below are at the Typewriter Shop for a general overhaul.
Remington Rand, # J622996
Underwood, # S115779149
L.C. Smith, # 1A1877351-11
L.C. Smith, # 1A1879108-11

All other machines within Section and accounted for.

J B R

S/Sgt. [illegible]

Supply sergeant

27

27

DECLASSIFIED E.O. 12065 SECTION 3-402 / NNDG NO. 775015



Page and urgently requested that the new navy minister be recommended since all other government business had been decided. After renewed insistence by both NAGANO and the witness, SHIMADA agreed to accept.

The witness and SHIMADA continued their conversations relative to the navy's views on the negotiations with America and the need for arriving at a peaceful solution. SHIMADA fully agreed to the witness' position and they discussed the procedure to be followed in carrying out the navy viewpoint. SHIMADA then went to see Premier TOJO to give him a prerequisite to his acceptance of the post. This was to continue negotiations sincerely and earnestly, and approach them from a completely new slant.

SHIMADA was selected simply because he was a high
34574 ranking admiral whom the witness thought possessed * excellent qualifications. The procedure followed in recommending him was no different than that pursued in the past. Both shared the same views and the navy decision to fight was entirely dependent upon the then existing situation which then took a violent turn for the worse.

DECLASSIFIED E.O. 12065 SECTION 3-402 / NNDG NO. 775015

GHQ SUPPLY APO 500

1 1

STATISTICS AND REPORTS SECTION
Rm. 406, Bank of Chosen Building, (M-4)

1. STAPLER, paper, fasting, wire, performed, (to fit Stapler, box exp none none 6
Stock Number: 54-M-21630-888)

////////////////////////////////Nothing Follows////////////////////////////////

REMARKS

BASIS: This item is needed to fit machine(Japanese make), paper, fasting, issued this Section on Property Issue Slip dated 11 June 1948.

AUTHORITY: Revised Proposed T/A Overhead Bulk Allotment Personnel for GHQ, SCAP and FEC, 1 January 1947.

RESPONSIBLE OFFICER: J. B. BEARD, CAPT., INF.

TELEPHONE NUMBER: 26-8542

25 June 48.

J.B. BEARD, CAPT., INF.

26 26

DECLASSIFIED E.O. 12065 SECTION 3-402 / NNDG NO. 775015

1 1

GHQ SUPPLY APO 500

STATISTICS AND REPORTS SECTION
Rm. 406, Bank of Chosen Building, (N-4) XXX

| | | | | | | | |
|---|---|---|---|---|---|---|---|
| 1. | 53-4192.150.007 | INK, drawing, waterproof, black, FS TT-I-526, 3/4 oz. bottle | btl | exp | none | none | 6 |
| 2. | 53-2108.500.600 | CEMENT, rubber, FS ZZ-C-191, type I, photographers and artists, liquid, 1 qt. can | can | exp | none | none | 6 |
| 3. | 53-2995.500.200 | ERASER, rubber, art gum, No PD-15 | ea | exp | none | none | 12 |
| 4. | 53-3451.150.180 | FOLDER, file, fibre, wallet, type, w/tie, w/full size gusset, 3½" expansion, 12 X 15 in. | ea | exp | none | none | 100 |
| 5. | 53-6244.700.200 | PAPER, cross, section, printed, FS UU-P-201, class B, drawing, type I, fourth line, hvy., engraved orange, in roll, 20" width, 20" lgth. section, 4 x 20 | roll | exp | none | none | 1 |
| 6. | 53-6265.200.200 | PAPER, cross section, printed, FS UU-P-201, class B, tracing, type II, tenth line, hvy., engraved orange, in roll, 20" width, 20" lgth. section, to in. 10 x 10 | roll | exp | none | none | 1 |

////////////////////////////////////////Nothing Follows////////////////////////////////////////

BASIS: To be used in offices of this Section employing 78 persons.

AUTHORITY: Revised Proposed T/A Overhead Ration Allotment Personnel for GHQ, SCAP and FEC, 1 January 1947.

25 June 6.

J. B. BEARD, CERT., INF.

DECLASSIFIED E.O. 12065 SECTION 3-402 / NNDG NO. 775015

GHQ SUPPLY AFO 500

STATISTICS AND REPORTS SECTION
Rm. 406, Bank of Chosen Building. (M-4)

| | | | | | | |
|---|---|---|---|---|---|---|
| 1. | 52-C-9095 | CARDS, index, filing, chemical, wood, white, ruled, 3 x 5 | ea | exp | none | none 500 |
| 2. | 52-C-12344 | CLIPS, paper, wire, gem, pattern, large | box | exp | none | none 10 |
| 3. | 52-E-2084 | ENVELOPES, mailing, common type, side opening, kraft, printed, 3-7/8" X 8-7/8" | ea | exp | none | none 100 |
| 4. | 52-E-2086 | ENVELOPES, common type, kraft, printed, 4-1/8" X 9-1/2" | ea | exp | none | none 100 |
| 5. | 52-E-4196 | ENVELOPES, mailing, common type, side opening, white, printed, 4-1/8" X 9-1/2" | ea | exp | none | none 100 |
| 6. | 52-E- | ENVELOPES, mailing, common type, end opening, kraft, printed, 8-1/2" X 11-1/2" | ea | exp | none | none 100 |
| 7. | 52-E- | ERASER, typewriter, oblong, #777 | ea | exp | none | none 6 |
| 8. | 52-E-5548 | ERASER, rubber, pencil, oblong, 40-to-pound | ea | exp | none | none 12 |
| 9. | 52-E-5808 | ERASER, rubber, typewriter, circular, with brush | ea | exp | none | none 12 |
| 10. | 52-F | FASTENER, metal, complete | box | exp | none | none 4 |
| 11. | 52-M-1654 | MUCILAGE, gum, pure, w/suitable brush or spreader | btl | exp | none | none 6 |
| 12. | 52-P-2610 | PAPER, blotting, standard, smbs. 300, sons, green, 19" X 24" | sht | exp | none | none 24 |

////////////////////////////////Continued Page -2-////////////////////////////////

DECLASSIFIED E.O. 12065 SECTION 3-402 / NNDG NO. 775015

| | | | | | | | | | |
|---|---|---|---|---|---|---|---|---|---|
| | | | | | 2 | 3 | | | |
| 13. | 53-P-16700 | PAPER, mimeograph, wood, pulp, chemical, subs. 18, white, 8 X 10½ | rm | exp | none | none | 24 | | |
| 14. | 53-P-1236 | PADS, memorandum, white, ruled, 6" X 9" | ea | exp | none | none | 12 | | |
| 15. | 53-P-23566 | PAPER, wraping, kraft, 30" | roll | exp | none | none | 1 | | |
| 16. | 52-P-26720 | PASTE, office, semi-liquid, w/brush or spreader, 4 oz. jars | btl | exp | none | none | 6 | | |
| 17. | 53-P-29212 | PENCILS, wood-cased, colored, green | ea | exp | none | none | 48 | | |
| 18. | 53-P-29228 | PENCILS, wood-cased, colored, red | ea | exp | none | none | 24 | | |
| 19. | 53-P-30000 | PENCILS, general writing, with-rubber, #1(soft) | ea | exp | none | none | 48 | | |
| 20. | 53-P-30004 | PENCILS, general writing, with-rubber, #2(med. soft) | ea | exp | none | none | 48 | | |
| 21. | 52-P-35695 | PENS, writing, steel, medium-point | gross | exp | none | none | 1 | | |
| 22. | 53-R-2876 | RIBBONS, typewriter, record, black, med. inked, ½" wide, L.C. SMITH | ea | exp | none | none | 12 | | |
| 23. | 53-R-2882 | RIBBONS, typewriter, record, black, med. inked, ½" wide, WOODSTOCK | ea | exp | none | none | 2 | | |
| 24. | 53-P-20836 | PAPER, stencil, duplicating-machine, waxless, dry-process, cellulose, blue, SU-P-546, 8½" X 14" | quire | exp | none | none | 6 | | |
| 25. | 53-T-360 | TABS, index, linen, gummed, stripe, without-celluloid, projection, grey, 1" X 6" | box | exp | none | none | 6 | | |
| 26. | 53-T-655 | TACKS, thumb, steel, FF-T-311, type III, 1/2" | box | exp | none | none | 6 | | |
| 27. | 53-T-280 | TWINE, cotton, 12 ply. 2-1/2 lb. ball | ball | exp | none | none | 3 | | |

Continued Page -3-

DECLASSIFIED E.O. 12065 SECTION 3-402 / NNDG NO. 775015

GHQ, SUPPLY APO 500

STATISTICS AND REPORTS SECTION
Rm. 406, Bank of Chosen Building, (N-4) XX

| | | | | | | | |
|---|---|---|---|---|---|---|---|
| 28. | 65-Y-300 | VARNISH, fluid correction, for stencil | btl | exp | none | none | 5 |
| 29. | 55-B-32720 | BOOKS, blank note, stenographer, board, cover, ruled, both sides, pen or pencil, 4 x 8 | ea | exp | none | none | 10 |
| 30. | 55-B-32800 | BOOK, blank, record, drill, bond, record, ruled, index and not pgnd, pages 150, 7-3/4"x12-1/8" | ea | exp | none | none | 10 |
| 31. | 55-B-32850 | BOOK, blank, record, drill, bond, record, ruled, not indexed, pgd., 152 pgs. 12-3/4" x 8" | ea | exp | none | none | 10 |

////////////////////////////////////Nothing Follows////////////////////////////////////

BASIS: To be used in offices of this Section employing 78 persons.

ADDENDUM: Revised Proposed S/A Overhead Bulk Allotment Personnel for GHQ, SCAP and FEC, 1 January 1948.

25 June 8.

J.D. BOARD, CAPT., INF.

DECLASSIFIED E.O. 12065 SECTION 3-402 / NNDG NO. 775015

FILE

Capt. Beard 26-5541

AG 311.15 (1 Jul 48)SRS

Inventory of Penalty Matter

SRS

CG, Hq & Sv Gp
Attn: G-4

1 July 1948

In compliance with Check Sheet, Headquarters and Service Group, GHQ FEC, APO 500, HC 311.15, 29 August 1947, subject: "Inventory of Penalty Matter," the following report is submitted:

Inventory made 30 June 1948.

| Penalty Matter | No. on Hand | No. acquired during Reporting Period | No. on Requisition |
|---|---|---|---|
| Envelopes | 1728 | 400 | 0 |
| Labels | 0 | 0 | 0 |
| Wrappers | 0 | 0 | 0 |
| Cards | 0 | 0 | 0 |

Penalty matter on which carrying postage is paid.

| Penalty Matter | No. used |
|---|---|
| Envelopes | 186 |
| Labels | 0 |
| Wrappers | 0 |
| Cards | 0 |

0 self-addressed penalty envelopes enclosed with outgoing correspondence for authorized replies.

0 number of reply envelopes returned under the indicia.

1 Incl:
WD Form 195 ---------- C. H. U. ----------

15

DECLASSIFIED E.O. 12065 SECTION 3-402 / NNDG NO. 775015

# QUARTERLY PENALTY MAIL STATEMENT UNDER PUBLIC LAW 364 AS AMENDED

REPORTS CONTROL SYMBOL AG-90

TO: GHQ Supply, Hq & Sv Gp

FROM: Statistics and Reports Section GHQ, SCAP

APPROPRIATION ----------

1. QUARTERLY STATEMENT OF PENALTY MAIL INVENTORIES, AND SUCH MATTER PROCURED, USED, AND OTHERWISE DISPOSED OF DURING THE QUARTER ENDING _____, 194__, UNDER THE REQUIREMENTS OF PUBLIC LAW 364, AS AMENDED, FOLLOWS:

| | | ENVELOPES, ALL SIZES | LABELS | WRAPPERS | CARDS | TAGS | OTHER ARTICLES | TOTAL |
|---|---|---|---|---|---|---|---|---|
| (1) | *a.* BEGINNING INVENTORY FOR QUARTER: (*See note 1a*) | | | | | | | |
| (2) | (1) TOTAL NUMBER ON HAND REPORTED IN PREVIOUS QUARTER | | | | | | | |
| (3) | (2) ADJUSTMENTS | | | | | | | |
| (4) | (3) TOTAL ADJUSTED BEGINNING INVENTORY (*Line 2 plus line 3*) | | | | | | | |
| (5) | *b.* ACTUAL ACQUISITIONS DURING CURRENT QUARTER (*See note 1b*) | | | | | | | |
| (6) | (1) BY REQUISITION ON WAR DEPARTMENT SUPPLY AGENCIES | | | | | | | |
| (7) | (2) UNDER POSTMASTER GENERAL CONTRACTS | | | | | | | |
| (8) | (3) FROM GOVERNMENT PRINTING OFFICE | | | | | | | |
| (9) | (4) UNDER WAR DEPARTMENT ARMY PERMIT NO. | | | | | | | |
| (10) | (5) TOTAL ACQUISITIONS DURING QUARTER (*Total of lines 6 to 9, inclusive*) | | | | | | | |
| (11) | *c.* MAILINGS BY OTHER AGENCIES FOR WAR DEPARTMENT (*See note 1c*) | | | | | | | |
| (12) | (1) GOVERNMENT PRINTING OFFICE | | | | | | | |
| (13) | (2) OTHERS | | | | | | | |
| (14) | (3) TOTAL MAILINGS BY OTHERS (*Line 12 plus line 13*) | | | | | | | |
| (15) | *d.* TOTAL TO BE ACCOUNTED FOR (*See note 1d*) (*Total of lines 4, 10, and 14*) | | | | | | | |
| (16) | *e.* DEDUCTIONS ACCRUING DURING CURRENT QUARTER (*See note 1e*) | | | | | | | |
| (17) | (1) OBSOLETE | | | | | | | |
| (18) | (2) DESTROYED, SPOILED, WASTED, OR USED FOR OTHER THAN MAIL PURPOSES | 0 | 0 | 0 | 0 | 0 | 0 | 0 |
| (19) | (3) USED FOR INTRA-THEATER OR INTER-CONTIGUOUS THEATER MAILING PURPOSES | 0 | 0 | 0 | 0 | 0 | 0 | 0 |
| (20) | (4) REPLY ENCLOSURES NOT RETURNED | 6 | 0 | 0 | 0 | 0 | 0 | 6 |
| (21) | (5) ITEMS ON WHICH CARRYING POSTAGE HAS BEEN PAID | 0 | 0 | 0 | 0 | 0 | 0 | 0 |
| (22) | (6) TRANSFERS TO OR MAILINGS FOR OTHER DEPARTMENTS | 186 | 0 | 0 | 0 | 0 | 0 | 186 |
| (23) | (7) ISSUED TO OTHER REPORTING AGENCIES OR ORGANIZATIONS | 0 | 0 | 0 | 0 | 0 | 0 | 0 |
| (24) | (8) TOTAL DEDUCTIONS (*Total of lines 17 to 23, inclusive*) | 0 | 0 | 0 | 0 | 0 | 0 | 0 |
| (25) | *f.* ENDING INVENTORY FOR QUARTER (*See note 1f*) | 192 | 0 | 0 | 0 | 0 | 0 | 192 |
| (26) | (1) NUMBER ON HAND | | | | | | | |
| (27) | *g.* TOTAL ON HAND PLUS DEDUCTIONS (*See note 1g*) (*Line 24 plus line 26*) | | | | | | | |
| (28) | *h.* TOTAL PIECES MAILED DURING QUARTER (*See note 1h*) (*Line 15 minus line 27*) | | | | | | | |
| (29) | *i.* ADJUSTMENTS TO CORRECT MAILINGS IN PREVIOUS QUARTER (*See note 1i*) | | | | | | | |
| (30) | (1) PLUS OR MINUS ADJUSTMENTS | | | | | | | |
| (31) | *j.* TOTAL AMOUNT TO BE REPORTED FOR CURRENT QUARTER (*See note 1j*) (*Line 28 + or − 30*) | | | | | | | |
| (32) | *k.* TOTAL COST AT $ PER THOUSAND PIECES (*See note 1k*) | | | | | | | |
| (33) | *l.* UNFILLED ORDERS AT END OF CURRENT QUARTER (*See note 1l*) | | | | | | | |
| (34) | (1) FOR PENALTY MATTER REQUISITIONED FROM OTHER AGENCIES OR ORGANIZATIONS WITHIN THE WAR DEPARTMENT | | | | | | | |
| (35) | (2) FOR PENALTY MATTER ORDERED UNDER POSTMASTER GENERAL'S CONTRACT | | | | | | | |
| (36) | (3) FOR PENALTY MATTER ORDERED THROUGH GOVERNMENT PRINTING OFFICE | | | | | | | |
| (37) | (4) FOR PENALTY MATTER PROCURED OR PREPARED UNDER WAR DEPARTMENT ARMY PERMIT NO. | | | | | | | |

2. I CERTIFY that the foregoing report is true and correct to the best of my knowledge and belief.

NAME, GRADE, AND TITLE OF REPORTING OFFICER

J. B. BEARD, Captain, Infantry

WD AGO FORM 1 SEPT 47 195

DECLASSIFIED E.O. 12065 SECTION 3-402 / NNDG NO. 775015

## INSTRUCTIONS

1*a*. (1) All using agencies making complete reports will complete item (1).

(2) All reporting agencies will show adjustments necessary to correct amounts reported in previous quarter in item (1). (*Explain by inclosure discrepancies due to previously unreported matter, etc.*)

*b*. (1) All using agencies making complete reports and all supply agencies will complete item (1).

(2)–(3) Procurement agencies only will complete items (2) and (3).

(4) Agencies procuring or preparing penalty matter under War Department permit number only will complete item (4).

*c*. All organizations and agencies will complete entries under *c* when notifications of such mailings have been received.

*d*. Entry under item *d* will be the total of items *a*, *b*, and *c*.

*e*. (1), (2), (3), (4), and (5). Report number of items bearing penalty indicia declared obsolete; destroyed, spoiled, or wasted; used for other than mail purposes; used for mail purposes within the theater or command, or with another theater or command in which mail matter will not pass out of Army Postal Service channels (*to be completed by oversea areas only*); return material not returned, or matter on which carrying postage (*air mail or parcel post*) has been paid.

(6) All agencies or organizations will report under item (6) the total number of pieces transferred to, or mailed for, other governmental departments during the quarter. Support by inclosures showing particulars.

(7) Agencies issuing penalty matter to other reporting agencies or organizations will enter the total amount of each type of such matter issued under item (7), except where the issuing agencies consolidate report data and report for their using agencies.

*f*. All organizations and agencies will record physical inventory count under this item.

*g*. Record total entries under item 1*e* and *f*.

*h*. Record item 1*d* less item 1*g*.

*i*. The same figure should be entered under item 1*i*, (1) as is used in item 1*a* (2). However, if a plus entry is used in 1*a* (2), a minus entry must be used in 1*i* (1), and vice versa.

*j*. Record item 1*h* plus or minus 1*i*, depending upon the type of entry in item 1*i* (1).

*k*. This item will not be completed by reporting agencies.

*l*. (1) This item will be completed by all reporting agencies, showing amounts on requisition or in transit but not received.

(2) This item will be completed by all procurement agencies obtaining penalty matter under Postmaster General Contract.

(3) This item will be completed by all procurement agencies obtaining penalty matter through the Government Printing Office.

(4) This item will be completed by all procurement agencies preparing or procuring penalty matter under War Department permit number.

NOTE.—Address to the headquarters which consolidates report data for the preparing agency when applicable. Headquarters, organizations, and installations reporting direct to The Adjutant General will address the report to: The Adjutant General, Attn: Chief, Army Postal Service Branch, Washington 25, D. C.

Reports will be submitted so as to reach The Adjutant General 20 days after the close of each quarter.

REMARKS



Eighth Army Printing Plant Shreveport
3602

DECLASSIFIED E.O. 12065 SECTION 3-402 / NNDG NO. 775015

28 June

To Exec O.

A For info B

Admin Dept

DECLASSIFIED E.O. 12065 SECTION 3-402 / NNDG NO. 775015

25 June 1948.

Inventory of INK drawing, CEMENT rubber and PEN, LeRoy

1. INK, drawing, black, 2 oz. btl. - - - - - - 22 bottles
" " " 3/4 " " - - - - - - 26 "
INK, drawing, white, 3/4 " " - - - - - - 22 "

2. CEMENT, rubber - - - - - - - - - - - - 12 qts.

3. PEN, LeRoy, #00 - - - - - - 9
0 - - - - - - 22
1 - - - - - - 26
2 - - - - - - 34
3 - - - - - - 22
4 - - - - - - 34
5 - - - - - - 32
6 - - - - - - 27
7 - - - - - - 28
8 - - - - - - 30
9 - - - - - - 11
10 - - - - - - 11

-*-*-*

DECLASSIFIED E.O. 12065 SECTION 3-402 / NNDG NO. 775015

23 June

To Exec O.

For Mike — By

Capt Beard
Enter on Secy.
card. Mrs Chapin

Admin Div

File
JBB

DECLASSIFIED E.O. 12065 SECTION 3-402 / NNDG NO. 775015

22 June 1948

TO : SUPPLY OFFICER

SUBJECT : Inventory of serial-numbered Office Equipment assigned to SRS.

TYPEWRITER, portable, w/carrying case, Remington, # N1164841 in use by Mr. McDonald at his Billet.

All other machines within Section and accounted for.

S/Sgt. Ernest Myers
Supply sergeant

DECLASSIFIED E.O. 12065 SECTION 3-402 / NNDG NO. 775015

16 June 48

To Exec O

For info

admin Div.

DECLASSIFIED E.O. 12065 SECTION 3-402 / NNDG NO. 775015

15 June 1948

TO : SUPPLY OFFICER

SUBJECT : Inventory of serial-numbered Office Equipment assigned to SRS.

TYPEWRITER, L.C. Smith, non-portable, 11" carriage, # 1A1879004-11 in for repairs.

TYPEWRITER, portable, w/carrying case, Remington, # N-1164841 in use by Mr. McDonald at his Billet.

All other machines within Section and accounted for.

E L B

S/Sgt. Louis Mayo Jr.

Supply sergeant

EJ

DECLASSIFIED E.O. 12065 SECTION 3-402 / NNDG NO. 775015

FILE

Report of Office Machines

SRS GHQ Supply 12 June 1948

1. In compliance with Check Sheet, your office, 7 June 1948, subject: "Report of Office Machines," the following report of Quartermaster issue machines is submitted:

| Stock No. | Item | Unit | Quantity on Hand |
|---|---|---|---|
| 54-M-25500 | Machine, duplicating, stencil, field kit | ea | 0 |
| 54-M-25980 | Machine, duplicating, using-composition-printing-surface, hand-operated, printing surface (Approx.), 8 x 13" | ea | 0 |
| 54-M-26000 | Machine, duplicating, using-composition-printing-surface, motor-driven, printing surface (Approx.), 8 x 13" | ea | 0 |
| 54-M-26792 | Machine, duplicating, using-spirit-process, hand-operated, printing surface (Approx.), 8 x 13" | ea | 0 |
| 54-M-26795 | Machine, duplicating, using-spirit-process, motor-driven, printing surface (Approx.), 8 x 13" | ea | 0 |
| 54-M-26810 | Machine, duplicating, using-spirit-process, military field kit | ea | 0 |
| 54-M-28580 | Machine, duplicating, using-stencil-paper, hand-operated, printing surface (Approx.), 8 x 13" | ea | 1 |
| 54-M-28780 | Machine, duplicating, using-stencil-paper, motor-driven, printing surface (Approx.), 8 x 13" | ea | 1 |

DECLASSIFIED E.O. 12065 SECTION 3-402 / NNDG NO. 775015

Report of Office Machines

SRS — OHQ Supply — 12 June 1948

| 1. (Cont'd.) | Stock No. | Item | Unit | Quantity on Hand |
|---|---|---|---|---|
| | 51-M-12220 | Machine, computing, listing, portable, hand-operated, 8 column capacity, without stand | ea | 1 |
| | 51-M-12540 | Machine, computing, listing, portable, hand-operated, 10 column capacity, without stand | ea | 2 |
| | 51-M15310 | Machine, computing, listing, portable, motor-driven, 8 column capacity, without stand | ea | 0 |
| | 51-M-15410 | Machine, computing, listing, portable, motor-driven, 10 column capacity, without stand | ea | 1 |
| | 51-M-16600 | Machine, computing, non-listing, (calculating), hand-operated, 8 key columns | ea | 3 |
| | 51-M-16606 | Machine, computing, non-listing, (calculating), hand-operated, 10 key columns | ea | 0 |
| | 51-M-16612 | Machine, computing, non-listing, (calculating), hand-operated, 12 key columns | ea | 0 |
| | 51-M-18030 | Machine, computing, non-listing, (calculating), motor-driven, 8 key columns | ea | 0 |
| | 51-M-18036 | Machine, computing, non-listing, (calculating), motor-driven, 10 key columns | ea | 1 |
| | 51-M-18042 | Machine, computing, non-listing, (calculating), motor-driven, 12 key columns | ea | 0 |

C. H. U.

DECLASSIFIED E.O. 12065 SECTION 3-402 / NNDG NO. 775015

FILE

GHQ SUPPLY APO 500

STATISTICS AND REPORTS SECTION
Rm. 404, Bank of Chosen Building (M-4)

| | | | | | |
|---|---|---|---|---|---|
| 1. | 17-2160.500.120 FAN, air circulating, desk and wall type (FS W-F-121), 110 volt AC, oscillating, metal blades, 12 inch | ea | 6 | 6 | 12 |

Last Item

BASIS: Request immediate procurement of the required number of fans.

These fans are the absolute minimum needed in order to achieve efficient operation and reasonable comfort of employees of Statistics and Reports Section during the excessively hot Summer season. No air conditioning facilities are available in the Section, as found among Staff Sections assigned to other buildings of the General Headquarters and the present number of fans issued is inadequate. Twelve offices (actually equivalent to 16 offices) must be supplied with only eight fans at present.

Room 404, for example, has no windows opening on the outside of the building, receives little if any fresh air and requires a minimum of four fans to maintain proper circulation.

Statistics and Reports Section employs 78 persons. The required number of fans were forecast for Second Quarter 1948 on Line 15, Bill of Materials, Forecast of Materials to be Supplied under Real Estate Demand for the Period 1 Jan 48 to 31 Dec 48, GHQ-37, Statistics and Reports Section GHQ SCAP, Bank of Chosen; and again confirmed on Line 22, Quartermaster Section, Forecast of Miscellaneous Indigenous Procurement Requirements (other than Operation and Management Services), GHQ-37, 1 April 48 to 31 March 49, GHQ SCAP.

11 June 48

P.M.D. HICKS, CAPT., INF.

(10)

DECLASSIFIED E.O. 12065 SECTION 3-402 / NNDG NO. 775015

2 June 48

To Exec. O.

For info.

admin Div.

DECLASSIFIED E.O. 12065 SECTION 3-402 / NNDG NO. 775015

1 June 1948

TO: SUPPLY OFFICER

SUBJECT : Inventory of serial-numbered Office Equipment assigned to SRS.

All machines within Section and accounted for.

S/Sgt. Ernest Meyer

Supply sergeant

DECLASSIFIED E.O. 12065 SECTION 3-402 / NNDG NO. 775015

26 May 48

To Exec O.

For info.

A. McGrew
Admin Div.

DECLASSIFIED E.O. 12065 SECTION 3-402 / NNDG NO. 775015

25 May 1948

TO : SUPPLY OFFICER

SUBJECT : Physical Inventory of serial-numbered Office Equipment assigned to SRS.

All machines assigned SRS are within Section and accounted for.

Ernest Meyer Jr., S/Sgt.
Supply sergeant

(15)

DECLASSIFIED E.O. 12065 SECTION 3-402 / NNDG NO. 775015

SRS - GHQ - SCAP
ROUTING SLIP

Date MAY 25 1948
M/C Log No. 22

| To | Initials | For Action | 2 |
|---|---|---|---|
| Chief | | Comment/Concur | |
| Executive | 1 | Note & Return | |
| Personnel | | Discuss | |
| Radio | | Info | |
| Editorial | | File | |
| Statistics | | Initials | |
| Admin. | 2 | Signature | |
| Historical | | Suspense Slip | |
| Library | | to Library | |

3 June 48

Remarks: Exec O.

Forecast for 1 Apr. 49 to 31 Mar. 1950 attached for approval.

Admin Div.

(Adm. #2 - 6 Aug 47)

DECLASSIFIED E.O. 12065 SECTION 3-402 / NNDG NO. 775015

SRS

HEADQUARTERS
HEADQUARTERS AND SERVICE GROUP
GENERAL HEADQUARTERS, FAR EAST COMMAND
APO 500

HC 400.12 HSD 24 May 1948

SUBJECT: Forecasting of Miscellaneous Indigenous Procurement for Occupation Forces Requirements.

TO: See Distribution

1. References.

a. Circular 25, Headquarters Eighth Army, 12 April 1948, "Forecasting of Miscellaneous Indigenous Procurement for Occupation Forces Requirements."

b. CINCFE Radio (CX60646)

c. Eighth Army Radio NR: EX 35587 GO, dated 19 May 1948.

2. a. Next Forecast of Miscellaneous Indigenous Procurement for Occupation Forces Requirements will cover period 1 April 1949 to 31 March 1950.

b. This Forecast is due into the S-4 Forecasting Section, Headquarters and Service Group, not later than 8 June 1948.

c. This Forecast must be hand-carried to the above Section by one familiar with the Forecast, before 8 June 1948, in the event there may be corrections necessary before final submission of consolidation to this Section.

d. Forms A and B, necessary for preparing this Forecast, are available at the S-4 Forecasting Section.

e. On Forms A and B, for Major Agency, use full name of organization or unit. An abbreviation is not acceptable.

f. All Indigenous Forecast Supplies (other than Operation and Management Services) will be prepared on Form A (Eighth Army Form 33). For sample Form A, reference is made to Eighth Army Circular 25, dated 12 April 1948. On opposite page of sample Form are detailed instructions for filling out the Form requirements properly. Column 6 (Requirements) has been changed. Column 6 will be divided into first half (first six months' requirements) and second half (second six -- months' requirements).

(17)

DECLASSIFIED E.O. 12065 SECTION 3-402 / NNDG NO. 775015

g. All Indigenous Forecast Services (Operation and Management Services), will be prepared on Form B. For sample Form B, reference is made to Eighth Army Circular 25, dated 12 April 1948. On opposite page of sample Form are detailed instructions for filling in the information required by this Form.

h. All organizations assigned Account Code 100 (U. S. Army) will consolidate Forecasts of units within the organization and forward the consolidation to this Section in three legible copies. Newspapers and magazines are Adjutant General requirements and will be forwarded in six legible copies to S-4 Forecasting Section.

i. Foreign Missions and other organizations with Account Codes other than 100 (U. S. Army) will forward their consolidated Forecast in six legible copies, with name of Receiving Officer included.

j. Correct Army Nomenclature will be used.

k. Items will be listed in alphabetical order.

l. Description and sizes will be fully stated.

m. Detailed basis and justification will be used for each line item. This will be typed across the page under the line item, or if the justification fits a group, then under the last line item of the group of items.

n. Within each section of each consolidated Account Code Forecast: A single series of line item numbers will be used and all consolidated to a single line item.

o. The "On-hand" column in Form A will reflect the total quantity expected to be on hand as of 1 July 1948 of the line item concerned.

p. The "Due-in" column in Form A will reflect the total quantity of the line item concerned, as due in, from any and all sources as of 1 July 1948.

q. Items and Services should be classified under the proper Technical Section. Ex: QM, AG, Signal, Ordnance, Engineer, Special Service, Transportation, Medical, Chemical or Air Technical.

5. For additional information regarding the Forecast of Miscellaneous Indigenous Procurement, telephone S-4 Forecasting Section - 43-2253.

FOR THE COMMANDING GENERAL:

QUINTUS C. ATKINSON
Captain, Cavalry
Adjutant

DISTRIBUTION:
"A"
"B"
Staff Sections of
GHQ and SCAP

SRS 82

DECLASSIFIED E.O. 12065 SECTION 3-402 / NNDG NO. 775015

REPORTS CONTROL SYMBOL
QGD-27

# FORECAST OF MISCELLANEOUS INDIGENOUS PROCUREMENT REQUIREMENTS (OTHER THAN OPERATION AND MANAGEMENT SERVICES)

Account Code: 100

Major Agency: Statistics and Reports Section

Command: General Headquarters, Supreme Commander for the Allied Powers

SECTION: ADJUTANT GENERAL

Beginning of forecast period: 1 April 1949

End of forecast period: 31 March 1950

| 1 Item No. | 2 Item | 3 Unit | 4 Quantity Due In | 5 Quantity on Hand | 6 ~~1st Qtr Rqt's by months~~ 1st Half | 2nd Half | 3 | 7 ~~2nd Qtr~~ | 8 ~~3rd Qtr~~ | 9 ~~4th Qtr~~ | 10 ~~Est'd $ Value~~ |
|---|---|---|---|---|---|---|---|---|---|---|---|
| 1. | Mainichi (JPNZ -9257-A from 1 Dec 47 to 30 June 48). | SUBS. ~~ea~~ | 5 ~~daily~~ | 5 ~~daily~~ | 5 ~~daily~~ | 5 ~~daily~~ | | | | | |
| 2. | Nippon Times (JPNZ -9257-A from 1 Dec 47 to 30 June 48). | SUBS. ~~ea~~ | 5 ~~daily~~ | 5 ~~daily~~ | 5 ~~daily~~ | 5 ~~daily~~ | | | | | |
| 3. | Nippon Times (Bound Copy) (JPNZ -9259-A from 1 Dec 47 to 30 June 48). | SUBS. ~~ea~~ | 1 ~~monthly~~ | 1 ~~monthly~~ | 1 ~~monthly~~ | 1 ~~monthly~~ | | | | | |
| 4. | Rengo Press (JPNZ -9258-A from 1 Dec 47 to 30 June 48). | SUBS. ~~ea~~ | 1 ~~semi-monthly~~ | 1 ~~semi-monthly~~ | 1 ~~semi-monthly~~ | 1 ~~semi-monthly~~ | | | | | |
| 5. | Jiji Commercial News (JPNZ -9257-A from 1 Dec 47 to 30 June 48). | SUBS. ~~ea~~ | 1 ~~daily~~ | 1 ~~daily~~ | 1 ~~daily~~ | 1 ~~daily~~ | | | | | |
| 6. | Jiji Home News Service (JPNZ -9257-A from 1 Dec 47 to 30 June 48). | SUBS. ~~ea~~ | 1 ~~ea. edition issued daily~~ | 1 ~~ea. edition issued daily~~ | 1 ~~ea edition issued daily~~ | 1 ~~ea. edition issued daily~~ | | | | | |

8A FORM 33

Eighth Army Printing Plant Bookpile 5526

DECLASSIFIED E.O. 12065 SECTION 3-402 / NNDG NO. 775015

100
Account Code

# FORECAST OF MISCELLANEOUS INDIGENOUS PROCUREMENT REQUIREMENTS (OTHER THAN OPERATION AND MANAGEMENT SERVICES)

REPORTS CONTROL SYMBOL
QGD-27

Statistics and Reports Section
Major Agency

General Headquarters, Supreme
Commander for the Allied Powers

ADJUTANT GENERAL SECTION

1 April 1948
Beginning of forecast period

31 March 1950
End of forecast period

| 1 | 2 | 3 | 4 | 5 | 6 | | | 7 | 8 | 9 | 10 |
|---|---|---|---|---|---|---|---|---|---|---|---|
| Item No. | Item | Unit | Quantity Due In | Quantity on Hand | ~~1st Qtr Rqt's by months~~ 1 | 2 | 3 | ~~2nd Qtr~~ | ~~3rd Qtr~~ | ~~4th Qtr~~ | ~~Est'd $ Value~~ |
| | | | | | 1st Half | 2nd Half | | | | | |
| 7. | Tokyo News (Okuyama Service) (JPNZ -9257-A from 1 Dec 47 to 30 June 48). | SUBS. ~~ea~~ | 1 ~~daily~~ | 1 ~~daily~~ | 1 ~~daily~~ | 1 ~~daily~~ | | | | | |
| 8. | Economic News (Okuyama Service) (JPNZ -9257-A from 1 Dec 47 to 30 June 48). | SUBS. ~~ea~~ | 1 ~~2 daily~~ | 1 ~~2 daily~~ | 1 ~~2 daily~~ | 1 ~~2 daily~~ | | | | | |
| 9. | Contemporary Japan, Review of East Asiatic Affairs (JPNZ -9256-A from 1 Dec 47 to 30 June 48). | SUBS. ~~ea~~ | 2 ~~ea.~~ ~~quarterly~~ | 2 ~~ea.~~ ~~quarterly~~ | 2 ~~ea.~~ ~~quarterly~~ | 2 ~~ea.~~ ~~quarterly~~ | | | | | |
| 10. | Japan Review (JPNZ -9256-A from 1 Dec 47 to 30 June 48). | SUBS. ~~ea~~ | 1 ~~weekly~~ | 1 ~~weekly~~ | 1 ~~weekly~~ | 1 ~~weekly~~ | | | | | |
| 11. | Oriental Economist (JPNZ -9256-A from 1 Dec 47 to 30 June 48). | SUBS. ~~ea~~ | 5 ~~weekly~~ | 5 ~~weekly~~ | 5 ~~weekly~~ | 5 ~~weekly~~ | | | | | |
| 12. | Democracy (JPNZ -9256-A from 1 Dec 47 to 30 June 48). | SUBS. ~~ea~~ | 1 ~~monthly~~ | 1 ~~monthly~~ | 1 ~~monthly~~ | 1 ~~monthly~~ | | | | | |

8A FORM 33

Eighth Army Printing Plant Zoo/Ide
5674

# FORECAST OF MISCELLANEOUS INDIGENOUS PROCUREMENT REQUIREMENTS (OTHER THAN OPERATION AND MANAGEMENT SERVICES)

REPORTS CONTROL SYMBOL
QGD-27

100
Account Code

Statistics and Reports Section
General Headquarters, Supreme
Commander for the Allied Powers
Major Agency

~~ADJUTANT GENERAL~~ SECTION

1 April 1949
Beginning of forecast period

31 March 1950
End of forecast period

| 1 Item No. | 2 Item | 3 Unit | 4 Quantity Due In | 5 Quantity on Hand | 6 ~~1st Qtr Req'ts by months~~ 1 2 3 | 7 ~~2nd Qtr~~ | 8 ~~3rd Qtr~~ | 9 ~~4th Qtr~~ | 10 ~~Est'd $ Value~~ |
|---|---|---|---|---|---|---|---|---|---|
| | | | | | 1st Half-2nd Half | | | | |
| 13. | Spotlight (JPRS-9256-A from 1 Dec 47 to 30 June 48). | ~~SUBS.~~ | ~~1 monthly~~ | ~~1 monthly~~ | ~~1 monthly~~ ~~1 monthly~~ | | | | |

Items 1-13 used by Executive, Editorial, Statistics and Historical Divisions in preparing and checking material and statistical data for semiweekly Operations Report, monthly Summation of Non-Military Activities in Japan and Historical Record of the Occupation; and by the Reference Library as material available for use by all Sections of GHQ, as required by G.O. No. 6, GHQ SCAP, 18 April 1947. Deliver to SRS.

8A FORM 33

Eighth Army Printing Plant, Zama
5576

DECLASSIFIED E.O. 12065 SECTION 3-402 / NNDG NO. 775015

DECLASSIFIED E.O. 12065 SECTION 3-402 / NNDG NO. 775015

100
Account Code

Statistics and Reports Section
Major Agency
General Headquarters, Supreme Commander for the Allied Powers
Command

# FORECAST OF MISCELLANEOUS INDIGENOUS PROCUREMENT REQUIREMENTS (OTHER THAN OPERATION AND MANAGEMENT SERVICES)

QUARTERMASTER SECTION

REPORTS CONTROL SYMBOL
QGD-27

1 April 1949
Beginning of forecast period

31 March 1950
End of forecast period

| 1 | 2 | 3 | 4 | 5 | 6 | | 7 | 8 | 9 | 10 |
|---|---|---|---|---|---|---|---|---|---|---|
| Item No. | Item | Unit | Quantity Due In | Quantity on Hand | ~~1st Qtr fiqt's by months~~ 1st Half | 2nd Half | ~~2nd Qtr~~ | ~~3rd Qtr~~ | ~~4th Qtr~~ | ~~Est'd $ Value~~ |
| 1. | Blinds, venetian, metal 42" x 80" | ea | 29 | 0 | 2 | 1 | | | | |
| | Normal replacements required for venetian blinds. Twenty-nine blinds were approved in Forecast for 1 July 48 to 31 Dec 48. SRS employs 83 people. Deliver to SRS. | | | | | | | | | |
| 2. | Cabinet, stationery, 52" x 18" x 72" high, stain walnut | ea | 1 | 2 | 1 | 0 | | | | |
| | Normal replacement required for cabinet, stationery. One replacement cabinet approved in Forecast for 1 July 48 to 31 Dec 48. SRS employs 83 people. Deliver to SRS. | | | | | | | | | |
| 3. | Ladder, portable, metal, 9'6" long x 14" wide. Paint grey (See sketch) | ea | 0 | 2 | 1 | 0 | | | | |
| | Normal replacement item to meet filing and reference operations prescribed by Par. 3, G.O. No. 6, GHQ SCAP, 18 April 1947. This item is non-standard, was especially manufactured in Japan in order to facilitate operation of SRS and is required because of limited aisle space and extremely high shelves. Deliver to SRS. | | | | | | | | | |
| 4. | Table, file, caster mounted, 31" x 21" x 32", Blonde furniture (See sketch) | ea | 0 | 2 | 1 | 0 | | | | |
| | Normal replacement item to meet filing and reference operations prescribed by Par. 3, G.O. No. 6, GHQ SCAP, 18 April 1947. This item is non-standard and was especially manufactured in Japan in order to facilitate operation of SRS. Deliver to SRS. | | | | | | | | | |
| 5. | "Roppo Zensho" (Compendium of Laws). Yearly edition. Book published by Iwanomi Shoten, Kanda, Tokyo. | ea | 1 copy of edition for 1945-47 | 0 | 1 copy of edition for 1948 | 1 copy of edition for 1949 | | | | |



Eighth Army Printing Plant Bonnyville 5576

DECLASSIFIED E.O. 12065 SECTION 3-402 / NNDG NO. 775015

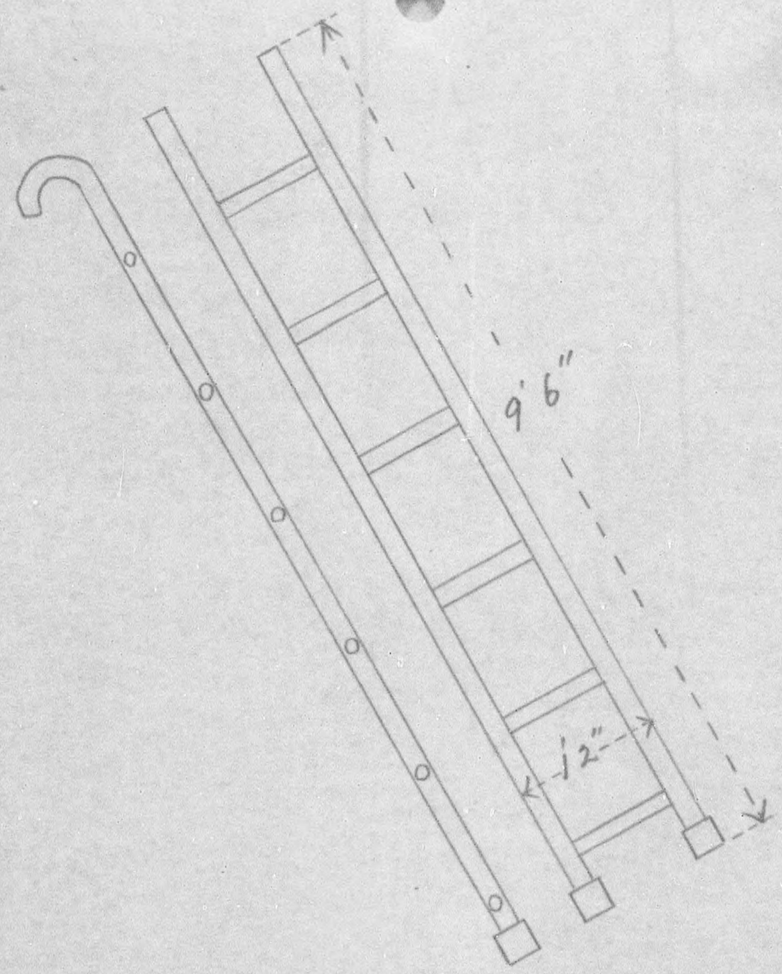


Ladder, portable, metal, 9 ' 6 " X 1 ' 2 " wide, Line 3, QM Section, Forecast, SRS, GHQ, QGD 27, 1 April 1949 to 31 March 1950. Paint Grey.

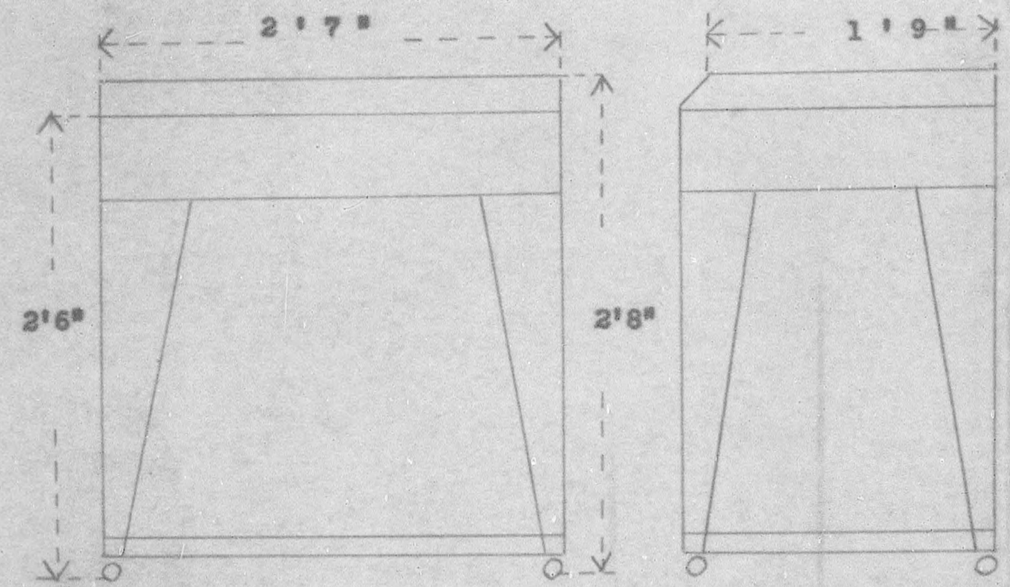


Table, file, caster mounted, 31 " X 21 " X 32 ", Blonde furniture,
Line No. 43, QM Section, Forecast, SRS, GHQ, SCAP,
QSD - 27, 1 April 1949 to 31 March 1950.

DECLASSIFIED E.O. 12065 SECTION 3-402 / NNDG NO. 775015

DECLASSIFIED E.O. 12065 SECTION 3-402 / NNDG NO. 775015

# FORECAST OF MISCELLANEOUS INDIGENOUS PROCUREMENT REQUIREMENTS (OTHER THAN OPERATION AND MANAGEMENT SERVICES)

REPORTS CONTROL SYMBOL
QGD-27

Account Code: 100

Major Agency: Statistics and Reports Section
General Headquarters, Supreme Commander for the Allied Powers

~~QUARTERMASTER~~ SECTION

Beginning of forecast period: 1 April 1949

End of forecast period: 31 March 1950

| 1 | 2 | 3 | 4 | 5 | 6 | | | 7 | 8 | 9 | 10 |
|---|---|---|---|---|---|---|---|---|---|---|---|
| Item No. | Item | Unit | Quantity Due In | Quantity on Hand | ~~1st Qtr Rqt's by months~~ 1st Half | 2nd Half | 3 | ~~2nd Qtr~~ | ~~3rd Qtr~~ | ~~4th Qtr~~ | ~~Est'd $ Value~~ |
| 6. | "Shin Horei Zenshu" (New Laws & Regulations) | ea | 1 copy of Volumes 1 thru 5 | 0 | 1 copy of Vol. 6 and succeeding volumes covering 1948. | 1 copy of volumes covering 1949. | | | | | |

Need for items 5 and 6 has risen in preparing and checking material for the monthly Summation of Non-Military Activities in Japan and the Historical Record of the Occupation and in operating SCAP Reference Library for benefit of all Sections of GHQ. These activities prescribed by G.O. No. 6, GHQ SCAP, 18 April 1947. Accuracy of SRS publications depends upon receipt of these items. Deliver to SRS.

8A FORM 33

Eighth Army Printing Plant Bonnefoy
5574

DECLASSIFIED E.O. 12065 SECTION 3-402 / NNDG NO. 775015

SRS - GHQ - SCAP
ROUTING SLIP

Date APR 21 1948

M/C Log No. 6

| To | Initials | | For |
|---|---|---|---|
| Chief | | | Action 2 |
| Executive | 1 | B | Comment/Concur |
| Personnel | | | Note-Return |
| Radio | | | Dispatch |
| Editorial | | | Info |
| Statistics | | | File |
| Admin. | 2 | | Initials |
| Historical | | | Signature |
| Library | | | Suspense Slip to Library |

Remarks: Exec O.

attached is breakdown of
one cost for info.
Suggested distribution of
Nippon Times & mainichi

Miss McGee

- 6 Aug 47)

DECLASSIFIED E.O. 12065 SECTION 3-402 / NNDG NO. 775015

GENERAL HEADQUARTERS
FAR EAST COMMAND

# CHECK SHEET

(Do not remove from attached sheets)

File No: HC 400.12 HSD  Subject: Forecast of Miscellaneous Indigenous Procurement

Note No.

From: S-4, Hq & Sv Gp  To: Statistics and Reports Section
Attn: Capt. Hicks  Date: 19 April 1948

Reference is made, for your information, to your Forecast of Miscellaneous Indigenous Procurement for the period 1 July 1948 to 31 December 1948.

a. Adjutant General Section
Items 1-13 are approved but not to exceed five copies of any one publication.

b. Quartermaster- Other than Operation and Management Services
Items 1 and 3 are approved.
Items 4-7 and 10-14 are disapproved. These items are available through normal supply channels.
Items 2 and 15 are disapproved. Should be fabricated locally.
Items 8 and 9 are disapproved due to insufficient basis and justification.

B.A.P.

FEC AGO Form No. 37
(9 February 1948)

0493—FEC Printing Plant—2/48—25M

1574

DECLASSIFIED E.O. 12065 SECTION 3-402 / NNDG NO. 775015

Re sub-paragraph (a)

ADJUTANT GENERAL SECTION

| | | |
|---|---|---|
| 1. | Mainichi | 8 daily |
| 2. | Nippon Times | 9 " |
| 3. | Nippon Times (Bound Copy) | 1 monthly |
| 4. | Rengo Press | 1 semi-monthly |
| 5. | Jiji Commercial News | 1 daily |
| 6. | Jiji Home News Service | 1 daily |
| 7. | Tokyo News (Okuyama Service) | 1 daily |
| 8. | Economic News (Okuyama Service) | 2 daily |
| 9. | Contemporary Japan | 2 quarterly (listed under Quartermaster Section) |
| 10. | Japan Review (Magazine) | 1 weekly " " " " |
| 11. | Oriental Economist (Magazine) | 5 weekly " " " " |
| 12. | Democracy (Magazine) | 1 monthly " " " " |
| 13. | Spotlight (Magazine) | 1 monthly " " " " |

Reference check note from S-4, Hq & Sv Gp, subject, "Forecast of Miscellaneous Indigenous Procurement," 19 April 1948, the above listed publications are approved, but are not to exceed five copies of any one publication. Mainichi and Nippon Times exceed the approved amount. Distribution as follows:

| | | | Filed |
|---|---|---|---|
| a. Mainichi (8) | - Radio, Exec., Stat. | (1 cy routed) | |
| | Library | (3 cys) | |
| | Edit. | (4 cys) | Library |
| b. Nippon Times (9) | - Radio, Stat. | (1 cy routed) | |
| | Exec., Hist. | (1 cy routed) | |
| | Library | (3 cys) | Library |
| | Edit. | (3 cys) | |
| | Colonel Unger | (1 cy) | |

Request consideration of a reduced distribution of the Mainichi & Nippon Times.

a. mc Shane
Admin Div.

Suggested distribution (cleared thru Mr. Hutchinson)

Mainichi (5 cys)
Radio, Exec, Stat, Edit. (1cy routed)
Edit. (1 cy)
Lib. (3 cys)

Nippon Times (5)
Radio, Stat, Edit. (1 cy routed)
Chief, Exec, Hist, Edit.-1 cy routed
Lib. (3 cys)

DECLASSIFIED E.O. 12065 SECTION 3-402 / NNDG NO. 775015

Re sub-paragraph (b)

QUARTERMASTER SECTION

| | Item | Unit | Quan. on Hand | Fore-casted | |
|---|---|---|---|---|---|
| 1. | Blinds, venetian, metal, 42" x 80". | ea | 0 | 29 | Approved |
| 2. | Book Shelves, 36" x 18" x 36" high w/two adjustable shelves. | ea | 9 | 1 | Disapproved, fabri-cated locally |
| 3. | Cabinet, stationery 52" x 18" x 72" | ea | 2 | 1 | Approved |
| 4. | Hall Rack, clothing 42" x 60" | ea | 4 | 1 | Disapproved, normal supply channels |
| 5. | Stools, foot, 36" x 18" x 6" high | ea | 10 | 1 | " " |
| 6. | Ladder, portable, metal, 9'6" long x 14" wide | ea | 3 | 1 | " " |
| 7. | Lamp, desk, gooseneck, 12" high | ea | 46 | 4 | " " |
| 8. | Lamp, desk, fluorescent, 100 volt | ea | 7 | 4 | Disapproved, insuffi-cient basis, & justifi-cation |
| 9. | Screens, movable, partition, wood | ea | 4 | 1 | " " |
| 10. | Stand, ash tray | ea | 0 | 6 | Disapproved, normal supply channels |
| 11. | Tree, coat, 65" high | ea | 2 | 1 | " " |
| 12. | Table, side, 54" x 18" x 30" high | ea | 5 | 1 | " " |
| 13. | Table, file, caster mounted | ea | 2 | 1 | " " |
| 14. | Trays, ash, small, glass | ea | 22 | 4 | " " |
| 15. | Board, bulletin, 3"6" x 2'4" | ea | 6 | 1 | Disapproved, fabri-cated locally. |

DECLASSIFIED E.O. 12065 SECTION 3-402 / NNDG NO. 775015

23 Apr 48

Col Hager

NIPPON TIMES

RADIO, Edit, Star, Hist (1)

CHIEF, SRS LIB (1)

EXEC (1)

LIB (2)

OK

MAINICHI

RADIO Edit Star (1)

EXEC (1)

LIB (3)

effective 1 July 48

DECLASSIFIED E.O. 12065 SECTION 3-402 / NNDG NO. 775015

1/

**Preparation of Table of Allowance**

SRS CO, HQ & SV GP 18 May 1948
Attn: T/A Board

Reference letter, Hq & Sv Gp, HC 400.34, dated 22 April 1948, subject: "Preparation of Table of Allowance," enclosed herewith is Table of Allowance No. 301-1043 for Statistics and Reports Section.

4 Incls:
1. Quartermaster Section
2. Engineer Section
3. Ordnance Section
4. Job description & rating list

C. H. U.

T/A filed in Supply Room - (Sgt. Meyer)

(5)

DECLASSIFIED E.O. 12065 SECTION 3-402 / NNDG NO. 775015

SRS - GHQ - SCAP
ROUTING SLIP

Date APR 23 1948
M/C Log No. 38

| To | Initials | | For | |
|---|---|---|---|---|
| Chief | | | Action | 23 |
| Executive | 1 | | Comment/Concur | |
| Personnel | 2 | | Note-Return | |
| Radio | | | Dispatch | |
| Editorial | | | Info | |
| Statistics | | | File | |
| Admin. | 3 | | Initials | |
| Historical | | | Signature | |
| Library | | | Suspense Slip to Library | |

Remarks: Mr. Powell

List of Personnel by job description & rating must accompany T/A.

301 - 1043
Table Dist.

(Adm. #2 - 6 Aug 47)

DECLASSIFIED E.O. 12065 SECTION 3-402 / NNDG NO. 775015

SRS

HEADQUARTERS
HEADQUARTERS AND SERVICE GROUP
GENERAL HEADQUARTERS
FAR EAST COMMAND

APO 500
22 April 1948

HC 400.34

SUBJECT: Preparation of Table of Allowance

TO: Staff Sections, SCAP and FEC, GHQ.

1. It is requested that sections of SCAP and FEC, GHQ prepare T/A's for their respective section based upon T/A 20-130 (FEC) dated 1 January 1948. This T/A will bear the same number as the Table of Distribution for that section.

2. It is requested that the following procedure will be used in the preparation of section T/A's:

a. A separate section will be prepared for each of the technical services and property will be listed alphabetically by nomenclature.

b. TA 20-130 (FEC) dated 1 January 1948 will be used as a guide. The basis of issue listed therein will not apply to each section; this should be adjusted to actual needs.

c. Items required for efficient operation of the section and not included in TA 20-130 should be included in the section T/A and marked by an asterisk. Complete justification must be shown for each of these items.

d. A list of the number of personnel by job description and rating will accompany each T/A.

e. Inclosure #1 is a sample of form to be used.

3. Any questions relative to the preparation of T/A's should be directed to Lt. V. W. Underwood, phone 43-2219, on ordnance items and to Capt. P. S. Finney, phone 43-2268, on items of the other technical services.

4. At this time the number of copies of T/A 20-130 (FEC) dated 1 January 1948 is limited. Copies may be drawn on hand receipt from GHQ Supply for a specific period.

5. T/A should be completed and submitted to the T/A Board, room 231A Finance Building prior to 20 May 1948.

FOR THE COMMANDING GENERAL:

Quintus C Atkinson

QUINTUS C ATKINSON
Captain, Cavalry
Adjutant

1 Incl.
1. Staff Bn, Hq & Sv Gp, T/A

301—1043
3/28 STATISTICS & REPORTS SECTION

STAFF BN. HQ. & SV. GP.

Table of Allowance No. 301-1105 Quartermaster Items

| ITEM (1) | ALLOWANCE (2) | QUANTITY ON HAND (3) | BASIS AND JUSTIFICATION (4) |
|---|---|---|---|
| DESK, executive type 35" x 60" | 35 | 35 | 1 per Officer, Warrant Officer, and Civilian equiv. in rating. 31 |

1. Complete nomenclature of item.

2. Allowance is the total quantity required for effecient operation of the section.

3. This figure will represent an actual physical inventory of all organizational and P.C.&S., property, including Japanese, presently on hand within the section

4. State here the basis of issue for each item and give justification for each item of an unusual nature or for an excessive quantity.

RECEIVED APR 23 1948 SRS 38

Inclosure #1 to Letter, Hq. & Sv.Gp., HC 400.34, 22 April 48.

DECLASSIFIED E.O. 12065 SECTION 3-402 / NNDG NO. 775015

DECLASSIFIED E.O. 12065 SECTION 3-402 / NNDG NO. 775015

Statistics & Reports Section

Table of Allowance No. 301-1043

| ITEM (1) | ALLOWANCE (2) | QUANTITY ON HAND (3) | BASIS AND JUSTIFICATION (4) |
|---|---|---|---|

DECLASSIFIED E.O. 12065 SECTION 3-402 / NNDG NO. 775015

Lab Chief

3 May

Request authority for Adm Asst to act Director to reproduce necessary number of copies of forms listed in 2e of attached lab complet report. Inclosure #1 is on reverse side of attached.

OK Maj Byrne

DECLASSIFIED E.O. 12065 SECTION 3-402 / NNDG NO. 775015

GHQ SUPPLY APC 500

STATISTICS AND REPORTS SECTION
Rm. 406, Bank of Chosen Building, (B-4)

| | | | | | | | |
|---|---|---|---|---|---|---|---|
| 1. | 16-D-300 | DESK, typing, drop center, 60 x 34 | ea. | 16 | 15 | none | 1 |
| 2. | 52-D-650 | DICTIONARY, Webster's Collegiate | ea. | 8 | 7 | none | 1 |
| 3. | 26-C-2750 | CHAIRS, typewriter, curved-adjustable-spring-back, vent-back | ea. | 16 | 0 | none | 1 |

Nothing Follows

BASIS: 1 per clerk typist.

AUTHORITY: T/A 20-120 (FEC), W.D., 1 January 1948. Consolidated T/A Overhead Unit Allotment Personnel for Japan and Korea, 1 January 1948.

17 May, 8.

E.M.D. HICKS, CAPT., INF.

(14)

DECLASSIFIED E.O. 12065 SECTION 3-402 / NNDG NO. 775015

1 1

GHQ SUPPLY APO 500

STATISTICS AND REPORTS SECTION
Rm. 406, Bank of Chosen Building.(N-4) XX

1. 54-2-4911 TYPEWRITER, non-portable, 11" carriage, L.C.Smith(Request new typewriter) on 29 28 0 6

////////////////////////////////Nothing Follows////////////////////////////////

BASIS:

Statistics and Reports Section is increasing its personnel from 77 persons to 83 persons which will include five (5) additional writers (historian) and one (1) additional clerk-typist. This increase in personnel necessitates the use of six(6) additional typewriters in order to provide minimum operational efficiency in this Section. These typewriters will be used a minimum of 40 hours per week. No part of this requirement can be met by redistributing machines within the Section, due to age of typewriters on hand and shortened deadlines for publications and monographs listed below. Deadlines have been reduced in compliance with desire of the Supreme Commander..

L.C.Smith typewriters, non-portable, 11" carriage are used to type reproduction copies for off-set printing of the Supreme Commander's monthly Summation of Non-Military Activities in Japan, monthly Catalog of SCAPIN's and monthly Catalog of SCAPIN-A's; and for the Commander-in-Chief's bi-monthly Summation of U.S. Army Military Government Activities in the Ryukyu Islands. The typed reproduction copies are photographed for printing process.

Historical Monographs of Non-Military Activities in Japan are being produced in greater volum against reduced deadlines, using L.C.Smith machines. Stencils for the Daily Gazette and monthly Index of SCAPIN's are also prepared on L.C.Smith typewriters.

These publications are required by General Order No. 6, GHQ, SCAP 18 April 1947. The increased rate of production has intensified the need for typewriters and for machines in good condition in order to maintain the required standards of these publications.

AUTHORITY: T/A 20-120(FEC), W.D., 1 January 1948. Consolidated T/A Overhead Bulk Allotment Personnel for Japan and Korea, 1 January 1948.

I certify that the typewriters listed hereon are required for official use within this Section and that no part of this requirement can be set aside by redistribution within this Section.

C.H.UNGER
Col, Cavalry
Chief, SRS

15 May, 8

T.H.B.HICKS, CAPT., INF.

DECLASSIFIED E.O. 12065 SECTION 3-402 / NNDG NO. 775015

GHQ SUPPLY APO 500

1 1

STATISTICS AND REPORTS SECTION
Rm. 406, Bank of Chosen Building. (B-4)

XXXX

| | | | | | | | |
|---|---|---|---|---|---|---|---|
| 1. | 52-7377.600.005 | PEN, Lefoy, lettering, single #00 | ea | exp | none | none | 24 |
| 2. | 52-7377.600.006 | PEN, Lefoy, lettering, single #0 | ea | exp | none | none | 18 |

Last Item

BASIS:

1. Request immediate procurement of above listed items for use in ten (10) sets of Pens, lettering, Lefoy w/guide issued to Statistics and Reports Section. Despite repeated regular and mergency requisitions, no issue of pens has been received since 27 February 1948. Stock on hand of these items is critically low. The replacement factor from the ZI is entirely inadequate for needs of this Section. Japanese manufactured pens break easily and are consumed at much faster than American type.

2. All ten (10) Lefoy sets are used in preparing graphs and charts for the monthly Summation of Non-Military Activities in Japan published by Supreme Commander of the Allied Powers, bi-monthly Summation of U.S. Army MilitaryGovernment Activities in the Ryukyu Islands published by the Commander-in-Chief, Far East and for the Historical record are prescribed by Par. 3, GO. No. 6, GHQ, SCAP, 18 April 1947.

3. Lefoy pens, sizes #00 and # 0 were forecast in lies 1 to 4, Engineer Section(forecast for 1 January 1948 to 31 December 1948).

4. Request advise on action taken.

14 May, 8.

T.H.D. HICKS, CAPT., INF.

DECLASSIFIED E.O. 12065 SECTION 3-402 / NNDG NO. 775015

**Request for Procurement of LeRoy Pens**

SRS GHQ Supply 14 May 1948

(1) 1. Request immediate procurement of the below listed types of LeRoy pens:

| Stock No. | Nomenclature | Quantity Desired |
|---|---|---|
| 53-7377.600.005 | Pen, LeRoy, lettering single #00 | 24 |
| 53-7377.600.006 | " " # 0 | 18 |

Requisition is enclosed.

These items are used in ten (10) sets of Pens, Lettering, LeRoy, w/guides issued to Statistics and Reports Section. Despite repeated regular and emergency requisitions, no issue of pens has been received since 28 February 1948. Stock on hand of these items is critically low. The replacement factor from the ZI is entirely inadequate for needs of this Section. Japanese-manufactured pens break easily and are consumed at a much faster rate than American types.

2. All ten (10) LeRoy sets are used in preparing graphs and charts for the monthly Summation of Non-Military Activities in Japan published by Supreme Commander for the Allied Powers, bimonthly Summation of U.S. Army Military Government Activities in the Ryukyu Islands published by the Commander-in-Chief, Far East and for the Historical Records of Non-Military Activities of the Occupation of Japan. Summations and histroical record are prescribed by Par. 3, G.O. No. 6, GHQ, SCAP, 18 April 1947.

3. LeRoy pens, sizes #00, #0, were forecast in lines 1 and 2, Engineer Section (forecast for 1 January 1948 to 31 December 1948).

4. Request advice on action taken.

1 Incl:
Requisition

G. H. U.

DECLASSIFIED E.O. 12065 SECTION 3-402 / NNDG NO. 775015

1 1

CINC SUPPLY APO 500

STATISTICS AND REPORTS SECTION
Rm. 406, Bank of Chosen Building,(U-A) XIX

1. SR-3829.ACO.500 CLEANING, LIQUID, heavy pur.
1 qt. bottle bbl qty none none 6
/////////////////////Nothing Follows/////////////////////

REMARKS

BASIS: To be used in offices of this section employing 78 persons.

AUTHORITY: Revised Proposed T/A Overhead Bulk Allotment Personnel for CINC, SCAP and FEC, 1 January 1947.

RESPONSIBLE OFFICER: T.M.D. HICKS, Capt., Inf.

TELEPHONE NUMBER: 26-5542

2A INF, G. T.M.D. HICKS, CAPT., INF.

DECLASSIFIED E.O. 12065 SECTION 3-402 / NNDG NO. 775015

1 1

CINC SUPPLY APO 500

STATISTICS AND REPORTS SECTION
Rm. 406, Bank of Chosen Building,(16-4)

1. 52-2108.500.600 CEMENT, rubber, FS [illegible]-C-191, type I, photographers and artists, liquid, 1 qt. can can cup none none 6

////////////////////Nothing Follows////////////////////

EMERGENCY

BASIS: Rubber cement is urgently needed by Statistics and Reports Section, the present critical shortage threatens to force a discontinuance of the following publications. This item is used in preparing reproduction copies of charts, graphs and text for monthly Summation of Non-Military Activities in Japan, monthly Summation of U.S.Army Military Government Activities in the Ryukyu Islands, monthly Catalog of SCAP Directives to the Japanese Government, monthly Catalog of Administratives(SCAPIN-A's) to the Japanese Government, and Allocation of Staff Responsibilities for Execution of Policies Adopted by the Far Eastern Commission as prescribed by Par. 3a, b and c, GO No. 6, 13 April 1947.

To be used in offices of this section employing 72 persons.

AUTHORITY: Revised Proposed T/A Overhead Bulk Allotment Personnel for CINC, SCAP and FEC, 2 January 1947.

RESPONSIBLE OFFICER: T.M.B. HICKS, Capt., Inf.

TELEPHONE: 26 - 5542

24 May, 8. T.M.B. HICKS, CAPT., INF.

DECLASSIFIED E.O. 12065 SECTION 3-402 / NNDG NO. 775015

1 1

GHQ SUPLY APO 500

STATISTICS AND REPORTS SECTION
Rm. 406, Bank of Chosen Building,(N-4) XXX

1. 53-9635.070.725 TAPE, scotch, cellulose, FS-GTG-T-101, transparent, 3/4" x 72 yd. roll ea none none 0

//////////Nothing Follows//////////

EMERGENCY

BASIS: To be used in offices of this section employing 78 persons.

AUTHORITY: Revised Proposed T/A/ Overhead Bulk Allotment Personnel for GHQ, SCAP and FEC, 1 January 1947.

RESPONSIBLE OFFICER: T.M.H. HICKS, Capt., Inf.

TELEPHONE NUMBER: 26 - 5542

1A 1cy, ea. T.M.H. HICKS, CAPT., INF.

DECLASSIFIED E.O. 12065 SECTION 3-402 / NNDG NO. 775015



GHQ SUPPLY APO 500

STATISTICS AND REPORTS SECTION
Rm. 406, BNHK OF CHOSEN BUILDING,(M-4) X XX

| | | | | | | |
|---|---|---|---|---|---|---|
| 1. 21-7470. 500.045 | ROPE, jute, FS T-R-592, mildew proof, MS 100-17, type I, solvent application, 7/16" | Coil | Exp | None | None | 8 |

NOTHING FOLLOWS

EMERGENCY

BASIS: This item is needed to perpare Summations and other publications for shipping overseas to Department of Army, Philrycom, Rykom and USAFIK.

Previously obtained by P.D. No. TKYC-3891, GHQ 2193.

Twenty coils of this item were Forecast in Line 16, Quartermaster Section, Forecast of Miscellaneous Indigenous Procurement Requirements (other than Operation and Management Services), QSD - 27, 1 January to 31 December 1948, Statistics and Reports Section, GHQ, SCAP.

AUTHORITY: Revised Proposed T/A Overhead Bulk Allotment Personnel for GHQ, SCAP and FEC, 1 January 1947.

RESPONSIBLE OFFICER: T.M.B. Hicks
T.M.B. HICKS, CAPT., INF.

TELEPHONE: 26 - 5542

14 May, T.M.B. Hicks
T.M.B. HICKS, CAPT., INF.

DECLASSIFIED E.O. 12065 SECTION 3-402 / NNDG NO. 775015



GHQ SUPPLY APO 500

STATISTICS AND REPORTS SECTION
Rm. 406, Bank of Chosen Building, (E-4)

| | | | | | | |
|---|---|---|---|---|---|---|
| 1. | 53-C-9075 | CARDS, index, filing, standard, wood, white, ruled, 3 x 5 | ea | exp | none none | 500 |
| 2. | 53-C-12344 | CLIPS, paper, wire, gem, pattern, large | ea | exp | none none | 10 |
| 3. | 53-C-12418 | CLIPS, paper, wire, ideal, pattern, large | ea | exp | none none | 4 |
| 4. | 53-C-12459 | CLIPS, paper, wire, med. ideal, pattern | ea | exp | none none | 4 |
| 5. | 53-E-5648 | ERASER, rubber, pencil, oblong, 60 - to - pound | ea | exp | none none | 12 |
| 6. | 53-E-5658 | ERASER, rubber, typewriter, eleraser, with brush | ea | exp | none none | 12 |
| 7. | 53-F-300 | FASTENER, fluid, correction, for stencil | bil | exp | none none | 2 |
| 8. | 53-F-5125 | FOLDERS, file, manila, vertical, flat type, plain, bottom, heavy, $\frac{1}{3}$ cut, 9½ x 11-3/4 | ea | exp | none none | 100 |
| 9. | 53-F-5127 | FOLDERS, file, manila, vertical, flat type, plain-bottom, heavy, $\frac{1}{3}$ cut, 9½ x 14-7/8 | ea | exp | none none | 100 |
| 10. | 53-P-2520 | PAPER, blotting, standard sube, 160, white, 3 x 9½ | ea | exp | none none | 50 |
| 11. | 53-P-2610 | PAPER, blotting, standard sube, 200 sheet, green, 19 x 24 | ea | exp | none none | 24 |
| 12. | 53-P-6116 | PAPER, carbon, typewriter, black, light weight, med. coating, 8 x 10½ | pkg | exp | none none | 2 |

//////////Continued Page 2//////////

DECLASSIFIED E.O. 12065 SECTION 3-402 / NNDG NO. 775015

| | | | | | | | 2 | 3 |
|---|---|---|---|---|---|---|---|---|
| 13. | 53-P-6116 | PAPER, carbon, typewriter, black, light weight, med. coating, 8 x 13 | pkg | exp | none | none | 2 | |
| 14. | 53-P-16700 | PAPER, mimeograph, wood, pulp, chemical, subs. 18, white, 8 x 10½ | rm | exp | none | none | 24 | |
| 15. | 53-P-22736 | PAPER, manifold, sulphite, white, 8 x 10½ | rm | exp | none | none | 10 | |
| 16. | 53-P-26720 | PASTE, office, semi-liquid, w/brush or spreader, 4 oz. jars. | btl | exp | none | none | 6 | |
| 17. | 53-P-29189 | PENCILS, wood-cased, colored, BLUE | ea | exp | none | none | 24 | |
| 18. | 53-P-29212 | PENCILS, wood-cased, colored, GREEN | ea | exp | none | none | 48 | |
| 19. | 53-P-29228 | PENCILS, wood-cased, colored, RED | ea | exp | none | none | 24 | |
| 20. | 53-P-30000 | PENCILS, general-writing, w/rubber, #1(soft) | ea | exp | none | none | 48 | |
| 21. | 53-P-30008 | PENCILS, general-writing, w/rubber, #2(med. soft) | ea | exp | none | none | 48 | |
| 22. | 53-R-2672 | RIBBONS, typewriter, record, black, med. inked, ½" wide, ROYAL | ea | exp | none | none | 3 | |
| 23. | 53-R-2676 | RIBBONS, typewriter, record, black, med. inked, ½" wide, L.C. SMITH | ea | exp | none | none | 12 | |
| 24. | 53-R-2682 | RIBBONS, typewriter, record, black, med. inked, ½" wide, WOODSTOCK | ea | exp | none | none | 2 | |
| 25. | 53-S-5044 | STAPLES, paper, fasting, wire, performed, ½ x ½ | box | exp | none | none | 2 | |
| 26. | 53- | TABS, index, strips, w/celluloid, projection, clear, 1 x 6 | box | exp | none | none | 6 | |
| 27. | 53-T-910 | TAGS, shipping, paper, stock, 15-30, with-twine-strings, 5-1/4 x 2-5/8 | ea | exp | none | none | 100 | |

Continued Page 3

DECLASSIFIED E.O. 12065 SECTION 3-402 / NNDG NO. 775015

CHQ SUPPLY AND SCD

STATISTICS AND REPORTS SECTION
Rm A06, Bank of China Building,(X-4) XXX

| | | | | | | |
|---|---|---|---|---|---|---|
| 28. | 53-T-280 | TWINE, cotton, 12 ply, 2½ lbs. ball | roll | sup | none | none | 3 |
| 29. | 53-R-3116 | RIBBONS, typewriter, record, black and red, mid. inked, ½" wide, REMINGTON | ea | sup | none | none | 4 |
| 30. | 53-R-3124 | RIBBONS, typewriter, record, black and red, mid. inked, ½" wide, L.C. SMITH | ea | sup | none | none | 4 |

Nothing follows

BASIS: To be used in offices of this Section employing 78 persons.

AUTHORITY: Revised Proposed T/A Overhead Bulk Allotment Personnel for CHQ, SCAP and FEC, 1 January 1947.

24 May 48. [signature]
C.M.B. HICKS, CAPT., INF.

DECLASSIFIED E.O. 12065 SECTION 3-402 / NNDG NO. 775015



CINC, SHIPLY AFO 900

STATISTICS AND REPORTS SECTION
Rm. 406, Bank of Chosen Building, (Ink.)

XYZ

| | | | | | | |
|---|---|---|---|---|---|---|
| 1. | 53-1453.220.300 | BOARD, bristol, FS UU-B-36l, smooth, type II, white, 2nd, grade, class B, 3 ply, 22 x 30 | sht | exp | none | none | 90 |
| 2. | 18-2716.530.400 | CELLULOID, transparent, clear, matte, finish surface, 1 side, sheet, 0.05" thick, 18" x 20" | sht | exp | none | none | 6 |
| 3. | 20-2750.370.056 | BRUSH, acid, 1/4" x 3/4", bristles, 1-3/4" long, osborne, No. 950l or equal | ea | exp | none | none | 36 |
| 4. | 53-4192.150.007 | INK, drawing, waterproof, black, FS TT-I-528, 3/4 oz. btl. | btl | exp | none | none | 8 |
| 5. | 53-5218.500.100 | LEAD, artists, FS GG-P-186, 6 refills, HB | doz | exp | none | none | 6 |
| 6. | 53-5218.500.700 | LEAD, artists, FS GG-P-186, 6 refills, 9H | doz | exp | none | none | 6 |
| 7. | 53-7653.600.500 | PENCIL, wax-chine, marking, green | ea | exp | none | none | 12 |
| 8. | 53-7697.600.400 | PENCILS, drawing, HB | ea | exp | none | none | 12 |
| 9. | 53-7697.600.090 | PENCILS, drawing, 9H | ea | exp | none | none | 24 |
| 10. | 53-8083.420.300 | CLOTH, tracing, FS CCC-C-531, ink, type I, 42" x 24 yds. | roll | exp | none | none | 3 |
| 11. | 27-9650.500.050 | CLOTH, wiping, cotton | lb | exp | none | none | 20 |
| 12. | 53-2795.300.300 | ERASER, rubber, erasing machine | doz. | exp | none | none | 2 |

//////////////////////Continued Page -2-//////////////////////

DECLASSIFIED E.O. 12065 SECTION 3-402 / NNDG NO. 775015



GHQ SUPPLY APO 500

STATISTICS AND REPORTS SECTION
Rm. 406, Bank of Chosen Buildings (B-4) XIX

| | | | | | | |
|---|---|---|---|---|---|---|
| 13. | 52-2095.200.200 | ERASER, rubber, art gum, No FE-12 | ea | exp | none | none | 12 |
| 14. | 52-7652.600.200 | PENCILS, wax-china, marking, black, | ea | exp | none | none | 12 |
| 15. | 52-7697.200.002 | PENCIL, wood-cased, colored, drawing, thin lead, hexagonal, assorted, 24 colors | set | exp | none | none | 2 |

Nothing Follows

BASIS: To be used in offices of this Section employing 78 persons.

AUTHORITY: Revised Proposed T/A Overhead Rolk Allotment Personnel for GHQ, SCAP and FEC, 1 January 1947.

14 May. 0. J.C.D.W.

W.H.B. HICKS, CAPT., INF.

DECLASSIFIED E.O. 12065 SECTION 3-402 / NNDG NO. 775015

GHQ SUPPLY, APO 500

STATISTICS AND REPORTS SECTION
Rm. 406, Bank of Chosen Building (H-4)

| | | | | | | |
|---|---|---|---|---|---|---|
| 1. | 17-4168.500.120 | FAN, air circulating, desk and wall type (FS W-F-101), 110 volt AC, Oscillating, metal blades, 12 inch | ea | 8 | none | 11 |

Nothing Follows

BASIS: Request immediate procurement of the required number of fans.

These fans are the absolute minimum needed in order to achieve efficient operation and reasonable comfort of employees of Statistics and Reports Section during the excessively hot Summer season. No air conditioning facilities are available in the Section, as found among Staff Sections assigned to other buildings of the General Headquarters and the present number of fans issued is inadequate. Twelve offices (actually equivalent to 16 offices) must be supplied with only eight fans at present.

Room 406, for example, has no windows opening on the outside of the building, receives little if any fresh air and requires a minimum of four fans to maintain proper circulation.

Statistics and Reports Section employs 76 persons. The required number of fans were forecast for Second Quarter 1948 on Line 10, Bill of Materials, Forecast of Materials to be Supplied under Real Estate Demand for the Period 1 Jan 48 to 31 Dec 48, QMC-27, Statistics and Reports Section GHQ SCAP, Bank of Chosen; and again confirmed on Line 25, Quartermaster Section, Forecast of Miscellaneous Indigenous Procurement Requirements (other than Operation and Management Services), QMC-37, 1 April 48 to 31 March 49, GHQ SCAP.

9 April 48

T.H.D. HICKS, CAPT., INF.

(3)

DECLASSIFIED E.O. 12065 SECTION 3-402 / NNDG NO. 775015

# CALCULATIONS USED IN PREPARING DRAFT REQUISITION

| | REQUIRED | ON HAND | REQUISITION |
|---|---|---|---|
| C/S & Exec ② 408 - | 2 Jans | | |
| Hist ① 401 - | 1 | | |
| Hist ① 402 - | 1 | | |
| Type Pool ① 403 - | 2 | | |
| Edit. ① 403A - | 1 | | |
| Edit Anal. ② 404A - | 3 | | |
| Lib. ① 404B - | 1 | | |
| Lib. Vault ① 404C - | 1 | | |
| Lib. ① 405 - | 1 | | |
| Adm. ① 406 - | 1 | | |
| Supply ① 407 - | 1 | | |
| Stat. ② 404 - | 4 | | |
| 120 offices | 19 | 8 | 11 |

$$17 \overline{)78.0} \quad 4.6$$
$$68$$
$$100$$

Formerly authorized 1 jan per 10 people
Now authorized 0 Jans
(Due to change in T/A)
Proposed basis 1 jan per 4.6 people
or
19 Jans to 12 offices

NO Jans are authorized in current T/A

DECLASSIFIED E.O. 12065 SECTION 3-402 / NNDG NO. 775015

FILE

311.15

**Inventory of Penalty Matter** 1 April 1948

SRS
CO, Hq & Sv Gp
Attn: S-4

In compliance with Check Sheet, Headquarters and Service Group, GHQ FEC, APO 500, HC 311.15, 29 August 1947, subject: "Inventory of Penalty Matter," the following report is submitted:

Inventory made 31 March 1948.

| Penalty Matter | No. on Hand | No. acquired during Reporting Period | No. on Requisition |
|---|---|---|---|
| Envelopes | 1520 | 0 | 0 |
| Labels | 0 | 0 | 0 |
| Wrappers | 0 | 0 | 0 |
| Cards | 0 | 0 | 0 |

Penalty matter on which carrying postage is paid.

| Penalty Matter | No. used |
|---|---|
| Envelopes | 98 |
| Labels | 0 |
| Wrappers | 0 |
| Cards | 0 |

0 self-addressed penalty envelopes enclosed with outgoing correspondence for authorized replies.

0 number of reply envelopes returned under the indicia.

1 Incl:
WD Form 195 C. H. U.

(1)

# QUARTERLY PENALTY MAIL STATEMENT UNDER PUBLIC LAW 364 AS AMENDED

REPORTS CONTROL SYMBOL AG-90

TO: GHQ Supply, Hq & Sv Gp

FROM: Statistics and Reports Section, GHQ SCAP

APPROPRIATION

1. QUARTERLY STATEMENT OF PENALTY MAIL INVENTORIES, AND SUCH MATTER PROCURED, USED, AND OTHERWISE DISPOSED OF DURING THE QUARTER ENDING _____, 194___, UNDER THE REQUIREMENTS OF PUBLIC LAW 364, AS AMENDED, FOLLOWS:

| | | ENVELOPES, ALL SIZES | LABELS | WRAPPERS | CARDS | TAGS | OTHER ARTICLES | TOTAL |
|---|---|---|---|---|---|---|---|---|
| (1) | a. BEGINNING INVENTORY FOR QUARTER: (*See note 1a*) | | | | | | | |
| (2) | (1) TOTAL NUMBER ON HAND REPORTED IN PREVIOUS QUARTER | | | | | | | |
| (3) | (2) ADJUSTMENTS | | | | | | | |
| (4) | (3) TOTAL ADJUSTED BEGINNING INVENTORY (*Line 2 plus line 3*) | | | | | | | |
| (5) | b. ACTUAL ACQUISITIONS DURING CURRENT QUARTER (*See note 1b*) | | | | | | | |
| (6) | (1) BY REQUISITION ON WAR DEPARTMENT SUPPLY AGENCIES | | | | | | | |
| (7) | (2) UNDER POSTMASTER GENERAL CONTRACTS | | | | | | | |
| (8) | (3) FROM GOVERNMENT PRINTING OFFICE | | | | | | | |
| (9) | (4) UNDER WAR DEPARTMENT ARMY PERMIT NO. | | | | | | | |
| (10) | (5) TOTAL ACQUISITIONS DURING QUARTER (*Total of lines 6 to 9, inclusive*) | | | | | | | |
| (11) | c. MAILINGS BY OTHER AGENCIES FOR WAR DEPARTMENT (*See note 1c*) | | | | | | | |
| (12) | (1) GOVERNMENT PRINTING OFFICE | | | | | | | |
| (13) | (2) OTHERS | | | | | | | |
| (14) | (3) TOTAL MAILINGS BY OTHERS (*Line 12 plus line 13*) | | | | | | | |
| (15) | d. TOTAL TO BE ACCOUNTED FOR (*See note 1d*) (*Total of lines 4, 10, and 14*) | | | | | | | |
| (16) | e. DEDUCTIONS ACCRUING DURING CURRENT QUARTER (*See note 1e*) | | | | | | | |
| (17) | (1) OBSOLETE | 0 | 0 | 0 | 0 | 0 | 0 | 0 |
| (18) | (2) DESTROYED, SPOILED, WASTED, OR USED FOR OTHER THAN MAIL PURPOSES | 0 | 0 | 0 | 0 | 0 | 0 | 0 |
| (19) | (3) USED FOR INTRA-THEATER OR INTER-CONTIGUOUS THEATER MAILING PURPOSES | 21 | 0 | 0 | 0 | 0 | 0 | 21 |
| (20) | (4) REPLY ENCLOSURES NOT RETURNED | 0 | 0 | 0 | 0 | 0 | 0 | 0 |
| (21) | (5) ITEMS ON WHICH CARRYING POSTAGE HAS BEEN PAID | 98 | 0 | 0 | 0 | 0 | 0 | 98 |
| (22) | (6) TRANSFERS TO OR MAILINGS FOR OTHER DEPARTMENTS | 0 | 0 | 0 | 0 | 0 | 0 | 0 |
| (23) | (7) ISSUED TO OTHER REPORTING AGENCIES OR ORGANIZATIONS | 0 | 0 | 0 | 0 | 0 | 0 | 0 |
| (24) | (8) TOTAL DEDUCTIONS (*Total of lines 17 to 23, inclusive*) | 119 | 0 | 0 | 0 | 0 | 0 | 119 |
| (25) | f. ENDING INVENTORY FOR QUARTER (*See note 1f*) | | | | | | | |
| (26) | (1) NUMBER ON HAND | | | | | | | |
| (27) | g. TOTAL ON HAND PLUS DEDUCTIONS (*See note 1g*) (*Line 24 plus line 26*) | | | | | | | |
| (28) | h. TOTAL PIECES MAILED DURING QUARTER (*See note 1h*) (*Line 15 minus line 27*) | | | | | | | |
| (29) | i. ADJUSTMENTS TO CORRECT MAILINGS IN PREVIOUS QUARTER (*See note 1i*) | | | | | | | |
| (30) | (1) PLUS OR MINUS ADJUSTMENTS | | | | | | | |
| (31) | j. TOTAL AMOUNT TO BE REPORTED FOR CURRENT QUARTER (*See note 1j*) (*Line 28 + or − 30*) | | | | | | | |
| (32) | k. TOTAL COST AT $ PER THOUSAND PIECES (*See note 1k*) | | | | | | | |
| (33) | l. UNFILLED ORDERS AT END OF CURRENT QUARTER (*See note 1l*) | | | | | | | |
| (34) | (1) FOR PENALTY MATTER REQUISITIONED FROM OTHER AGENCIES OR ORGANIZATIONS WITHIN THE WAR DEPARTMENT | | | | | | | |
| (35) | (2) FOR PENALTY MATTER ORDERED UNDER POSTMASTER GENERAL'S CONTRACT | | | | | | | |
| (36) | (3) FOR PENALTY MATTER ORDERED THROUGH GOVERNMENT PRINTING OFFICE | | | | | | | |
| (37) | (4) FOR PENALTY MATTER PROCURED OR PREPARED UNDER WAR DEPARTMENT ARMY PERMIT NO. | | | | | | | |

2. I CERTIFY that the foregoing report is true and correct to the best of my knowledge and belief.

NAME, GRADE, AND TITLE OF REPORTING OFFICER

T. M. B. HICKS, Captain, Infantry

WD AGO FORM 1 SEPT 47 195

DECLASSIFIED E.O. 12065 SECTION 3-402 / NNDG NO. 775015

DECLASSIFIED E.O. 12065 SECTION 3-402 / NNDG NO. 775015

## INSTRUCTIONS

1*a*. (1) All using agencies making complete reports will complete item (1).

(2) All reporting agencies will show adjustments necessary to correct amounts reported in previous quarter in item (1). (*Explain by inclosure discrepancies due to previously unreported matter, etc.*)

*b*. (1) All using agencies making complete reports and all supply agencies will complete item (1).

(2)–(3) Procurement agencies only will complete items (2) and (3).

(4) Agencies procuring or preparing penalty matter under War Department permit number only will complete item (4).

*c*. All organizations and agencies will complete entries under *c* when notifications of such mailings have been received.

*d*. Entry under item *d* will be the total of items *a*, *b*, and *c*.

*e*. (1), (2), (3), (4), and (5). Report number of items bearing penalty indicia declared obsolete; destroyed, spoiled, or wasted; used for other than mail purposes; used for mail purposes within the theater or command, or with another theater or command in which mail matter will not pass out of Army Postal Service channels (*to be completed by oversea areas only*); return material not returned, or matter on which carrying postage (*air mail or parcel post*) has been paid.

(6) All agencies or organizations will report under item (6) the total number of pieces transferred to, or mailed for, other governmental departments during the quarter. Support by inclosures showing particulars.

(7) Agencies issuing penalty matter to other reporting agencies or organizations will enter the total amount of each type of such matter issued under item (7), except where the issuing agencies consolidate report data and report for their using agencies.

*f*. All organizations and agencies will record physical inventory count under this item.

*g*. Record total entries under item 1*e* and *f*.

*h*. Record item 1*d* less item 1*g*.

*i*. The same figure should be entered under item 1*i*, (1) as is used in item 1*a* (2). However, if a plus entry is used in 1*a* (2), a minus entry must be used in 1*i* (1), and vice versa.

*j*. Record item 1*h* plus or minus 1*i*, depending upon the type of entry in item 1*i* (1).

*k*. This item will not be completed by reporting agencies.

*l*. (1) This item will be completed by all reporting agencies, showing amounts on requisition or in transit but not received.

(2) This item will be completed by all procurement agencies obtaining penalty matter under Postmaster General Contract.

(3) This item will be completed by all procurement agencies obtaining penalty matter through the Government Printing Office.

(4) This item will be completed by all procurement agencies preparing or procuring penalty matter under War Department permit number.

NOTE.—Address to the headquarters which consolidates report data for the preparing agency when applicable. Headquarters, organizations, and installations reporting direct to The Adjutant General will address the report to: The Adjutant General, Attn: Chief, Army Postal Service Branch, Washington 25, D. C.

Reports will be submitted so as to reach The Adjutant General 20 days after the close of each quarter.

REMARKS



Eighth Army Printing Plant Shreveport
3952

DECLASSIFIED E.O. 12065 SECTION 3-402 / NNDG NO. 775015

FILE

1 1

GHQ SUPPLY APO 500

STATISTICS AND REPORTS SECTION, Rm. 405, Bank of Chosen Building.
(M-4)

| | | | | | |
|---|---|---|---|---|---|
| 1. | 18-9206.<br>570.420 | T-SQUARE, steel, protractor, head, 42" | Ea | 2 | FWT |
| 2. | 18-9206.<br>370.420 | T-SQUARE, maple, plastic, lined, (FS GG-T-711), fixed head, 42" | Ea | 2 | FWT |
| 3. | 54-5840.<br>500.500 | MACHINE, erasing, electric operated, 110 volt, A.C. complete, with 6 ft. cord, plug & 12 erasers. HC PE-91 | Ea | 1 | FWT |
| 4. | 18-5830.<br>500.240 | PROTRACTOR, parallel motion, 24" arm, Drumming Model, 3699 or equal | Ea | 1 | FWT |
| 5. | 18-9053.<br>670.080 | TRIANGLE, plastic , transparent, 45 degrees,(FS GG-T-671) 8" | Ea | 2 | FWT |
| 6. | 18-9052.<br>670.060 | TRIANGLE, plastic, transparent, 45 degrees,(FS GG-T-671) 6" | Ea | 5 | FWT |
| 7. | 18-9052.<br>630.120 | TRIANGLE, plastic, transparent, 30 and 60 degrees,(FS GG-T-671) 12" | Ea | 4 | FWT |
| 8. | 42-5752.<br>800.020 | LOCK, pad, FS FF-P-101, pin, tumbler, mechanism, type I, bronze or brass case, 2" | Ea | 1 | FWT |

////////////////////////// Nothing Follows //////////////////////////////////

Turn-In
(Voucher No. 936-M4)

16 March 8

T.M.B. Hicks

T.M.B. HICKS, CAPT., INF.

(1)

DECLASSIFIED E.O. 12065 SECTION 3-402 / NNDG NO. 775015



GHQ SUPPLY, GHQ FEC, APO # 500
STATISTICS AND REPORTS SECTION
Rm. 406, Bank of Chosen Building (M-4)

X

| | | | | | | |
|---|---|---|---|---|---|---|
| 1. 18-9206. 570.420 | T-SQUARE, steel, protractor head, 42" | ea | 6 | 4 | none | 2 |
| 2. 18-9206. 370.420 | T-SQUARE, maple, plastic lined, (FS GG-T-711) fixed head, 42" | ea | 4 | 2 | none | 2 |
| 3. 18-9052. 670.080 | TRIANGLE, plastic, transparent, 45 degrees, (FS GG-T-671) 8" | ea | 15 | 13 | none | 2 |
| 4. 18-9052. 670. 060 | TRIANGLE, plastic, transparent, 45 degrees, (FS GG-T-671) 6" | ea | 24 | 19 | none | 5 |
| 5. 18-9052. 630.120 | TRIANGLE, plastic, transparent, 30 and 60 degrees, (FS GG-T-671) 12" | ea | 12 | 8 | none | 4 |
| 6. 54-5840. 500.500 | MACHINE, erasing, electric operated, 110 volt, AC complete with 6 ft. cord, plug and 12 erasers MC FD-91 | ea | 2 | 1 | none | 1 |
| 7. 18-5830. 500.240 | PROTRACTOR, parallel motion, 24" arm, Brunning Model 2699 or equal | ea | 3 | 2 | none | 1 |
| 8. 42-5752. 500.020 | LOCK, pad, FS FF-P-101, pin tumbler mechanism, type I, bronze or brass case, 2" | ea | 8 | 4 | 3 | 1 |

////////////////////////////// Last Item //////////////////////////////

BASIS: Replacement of items turned in on Property Turn-In-Slip dated 16 March 1948. Items turned in are unserviceable due to Fair Wear and Tear. Replacement will not result in quantities in excess of authorized allowance.

AUTHORITY: Revised Proposed T/A Overhead Bulk Allotment Personnel for GHQ, SCAP and FEC, 1 January 1947.

16 March 8

T.M.B. HICKS, CAPT., INF.

DECLASSIFIED E.O. 12065 SECTION 3-402 / NNDG NO. 775015

GHQ SUPPLY, APO 500

STATISTICS AND REPORTS SECTION
Room 406, Bank of Chosen Building, (M-4) XX

| | | | | | | |
|---|---|---|---|---|---|---|
| 1. | 54-T-4811 | TYPEWRITER, non-portable, 11" carriage, L. C. Smith (Request new typewriters) | Ea | 33 | 28 | none 2 |

LAST ITEM

BASIS: Statistics and Reports Section is authorized 33 typewriters, non-portable, 11" carriage, but has on hand only 28 such machines. Addition of two typewriters will still be below authorized allowance, will provide only for the minimum operating needs of the Section, and will not permit any reserve to replace machines in repair shop. These typewriters will be used a minimum of 40 hours per week. No part of this requirement can be met by redistributing machines within the Section, due to age of typewriters on hand and shortened deadlines for publications and monographs listed below. Deadlines have been reduced in compliance with desires of the Supreme Commander.

L. C. Smith typewriters, non-portable, 11" carriage are used to type reproduction copies for off-set printing of the Supreme Commander's monthly Summation of Non-Military Activities in Japan, monthly Catalog of SCAPIN's and monthly Catalog of SCAPIN-Ai's; and for the Commander-in-Chief's bi-monthly Summation of U. S. Army Military Government Activities in the Ryukyu Islands. The typed reproduction copies are photographed for printing process.

Historical Monographs of Non-Military Activities in Japan are being produced in greater volume against reduced deadlines, using L. C. Smith machines. Stencils for the Daily Gazette and monthly Index of SCAPIN's are also prepared on L. C. Smith typewriters.

These publications are required by General Order No. 6, GHQ, SCAP, 18 April 1947. The increased rate of production has intensified the need for typewriters and for machines in good condition in order to maintain the required standards of these publications.

AUTHORITY: T/A 20-130(FEC), W. D., 1 January 1948. Consolidated T/A Overhead Bulk Allotment Personnel for Japan and Korea, 1 January 1948.

I certify that the typewriters listed hereon are required for official use within this Section and that no part of this requirement can be set aside by redistribution within this Section.

C. H. UNGER
Col, Cavalry
Chief, SRS

12 March

T.M.B. Hicks
8 T.M.B. HICKS, Capt, Inf.

(10)

DECLASSIFIED E.O. 12065 SECTION 3-402 / NNDG NO. 775015



GHQ SUPPLY, GHQ FEC, APO# 500
STATISTICS AND REPORTS SECTION
Rm. 406, Bank of Chosen Building

X

| | | | | | | | |
|---|---|---|---|---|---|---|---|
| 1. | 26-C-2425 | CHAIR, wood, swivel, with arms, executive type | ea | 12 | none | none | 8 |

////////////////////////////////Last Item ////////////////////////////////

BASIS: 1 per Officer, field grade and above, and civilian with equiv rating in office.

AUTHORITY: Revised Proposed T/A Overhead Bulk Allotment Personnel for GHQ, SCAP and FEC, 1 January 1947.

12 March 8
T.M.B. HICKS, CAPT., INF.

(2)

DECLASSIFIED E.O. 12065 SECTION 3-402 / NNDG NO. 775015



GHQ SUPPLY, GHQ FEC, APO # 500

STATISTICS AND REPORTS SECTION
Rm. 406, Bank of Chosen Building (M-4)

X

1. 54-M-18030 MACHINE, calculating, electric, non-listing, 8-key-columns ea 1 1 none 1

////////////////////////////////// Last Item //////////////////////////////////

BASIS: This machine is urgently needed in order to prepare and check statistical data for the Supreme Commander's monthly Summation of Non-Military Activities in Japan, Historical Monographs of Non-Military Activities in Japan and the Commander-in-chief's bi-monthly Summation of U.S. Army Military Activities in the Ryukyu Island, Rate of production for all these publications has been greatly increased in compliance with desires of the Supreme Commander.

The machine now on hand is unserviceable and repeated attempts to repair it have been unsuccessful. Machine has been returned from repair shop after being worked over from 20 January 1948 to 12 March 1948 and will be submitted for salvage on 6 April 1948, the regular QM salvage date, on Property Turn-In-Slip.

AUTHORITY: Revised Proposed T/A Overhead Bulk Allotment Personnel for GHQ, SCAP and FEC, 1 January 1947.

12 March

8 T.M.B. Hicks
T.M.B. HICKS, CAPT., INF.

(8)

DECLASSIFIED E.O. 12065 SECTION 3-402 / NNDG NO. 775015

FILE

GHQ SUPPLY APO # 500#

STATISTICS AND REPORTS SECTION
Rm. 406, Bank of Chosen Building (N-4)

1 1

X

1. COSTUMERS, wood, "Coat Tree", (upright type) on 1 none 10

Last Item

EMERGENCY

BASIS: These costumers, wood, ("coat tree" upright type) are urgently needed in order to hang within offices overcoats, raincoats, hats ect, belonging to civilian and military personnel of SRS. Several items of clothing have been stolen recently from corridors of the building. Corridors are not secure against entry by thieves. SRS employs 73 personnel assigned to 12 offices. The requisitioned costumers will be barely adequate to hold coats and hats of assigned personnel. Requisition per phone conversation this date between Capt. Hicks, Supply Officer, SRS and Capt. Kopelka, GHQ Supply.

T.H.B.

REQUESTED BY: T.H.B. HICKS,
OFFICER: Capt., Inf.

TELEPHONE: 36-6542

2 March 8 T.H.B.
T.H.B. HICKS, CAPT., INF.

(1)

DECLASSIFIED E.O. 12065 SECTION 3-402 / NNDG NO. 775015

FILE

GHQ SUPPLY APO 500

STATISTICS AND REPORTS SECTION
Rm. 406, Bank of Chosen Building.(M-4)

XX

| | | | | | | | |
|---|---|---|---|---|---|---|---|
| 1. | 43-5753.890.020 | LOCK, pad, FS P-101, pin tumbler mechanism, type I, steel case, cadmium plated, 2 inch, Master No. 5 or equal | Ea | 6 | 5 | none | 3 |
| 2. | 18-5466.800.850 | PEN, drawing, ruling, spring, hinge, NS 26-2, 5½ inch | Ea | 8 | 6 | none | 2 |
| 3. | 18-5136.300.380 | PANTOGRAPH, precision,(NS 7-538), 38 in. suspended bars, ratio from 1 to 20, with 2 bases of leads, one 3 H and one 6 H, and instruction book, in hardwood case | Ea | 1 | none | none | 1 |

Last Item

BASIS: Replacement of item turned in on Property Turn-In-Slip dated ~~February 1948.~~ 2 March 48 These items were turned in due to fair wear ~~and tear.~~ Replacement will not result in quantities excess of authorized allowances.

AUTHORITY: Revised Proposed T/A Overhead Unit Allotment Personnel For GHQ , SCAP and FEC, 1 January, 1947.

~~19 Feb. 48.~~ 2 March 48

T.M.R.HICKS,CAPT.INF.

(6)

DECLASSIFIED E.O. 12065 SECTION 3-402 / NNDG NO. 775015

FILE

Addendum to Revised Proposed Table of Allowances for Overhead Bulk Allotment Personnel

SRS

Attn: CG, Hq. & Sv. Gp. 26 February 1948
S-3

1. Reference Revised Proposed Table of Allowances for Overhead Bulk Allotment Personnel in General Headquarters, Supreme Commander for the Allied Powers and Far East Command, 1 January 1947. The following addendum to Section IV is requested in order that SRS may operate efficiently in performing its assigned function of preparing graphs, charts and maps for the monthly Summation of Non-military Activities in Japan, bi-monthly Summation of United States Army Military Government Activities in the Ryukyus Islands and Historical Monographs of Non-military Activities in Japan:

ADDENDUM TO SECTION IV
ENGINEER EQUIPMENT

| Item | Allowance | Basis of Issue and Remarks |
|---|---|---|
| Pen. Lettering, LeRoy, w/guides | 1 | per draftsman SRS |

2. At present time the Proposed Table of Allowances authorizes only one (1) Pen, Lettering, LeRoy, w/guides per Section, and one (1) per 10 draftsmen.

a. One (1) set per each draftsman in this Section is essential, inasmuch as the LeRoy Pen is the principal instrument constantly in use by each SRS draftsman in preparing the outlays of graphs, charts and maps incorporated in the Summations.

b. The current allotment of authorized draftsman allowed SRS is 10. Ten LeRoy sets are on hand. Replacement issues of pen points from the Z. I. are received only on the basis of two authorized sets. This makes it necessary to depend on issues of pen points obtained through procurement demand on Japanese manufacturers. Japanese points in sizes #00 particularly are not of proper quality, break far too easily, and are not received in sufficient quantities because of difficulty in manufacture.

3. Deadlines for publication of Summations and completion of Monographs have been greatly emphasized in compliance with recently expressed desires of the Supreme Commander. This intensifies the need for an increase in LeRoy sets and for adequate replacement of pen points.

4. In view of the above facts, it is requested that Addendum to Table of Allowances be made in order that the issue of replacement pen points may be increased by the increase of authorized LeRoy sets from two to 10.

C. H. U.

MEMO FOR RECORD: Maj. Lucas (Organization & Equipment Branch, G-3) on 26 February informed Exec. SRS that correct channel for above is to CG, Hq & Sv. Gp. Attn: S-3.

CFB

DECLASSIFIED E.O. 12065 SECTION 3-402 / NNDG NO. 775015

DRAFT

DRAFT

Subject: Addendum to Revised Proposed Table of Allowances for Overhead Bulk Allotment Personnel

From: SRS To: G-3 Date: 14 February 1948

1. Reference Revised Proposed Table of Allowances for Overhead Bulk Allotment Personnel in General Headquarters, Supreme Commander for the Allied Powers and Far East Command, 1 January 1947. The following addendum to Section IV is requested in order that SRS may operate efficiently in performing its assigned function of preparing graphs, charts and maps for the monthly Summation of Non-military Activities in Japan, bi-monthly Summation of United States Army Military Government Activities in the Ryukyus Islands and Historical Monographs of Non-military Activities in Japan:

ADDENDUM TO SECTION IV
ENGINEER EQUIPMENT

| Item | Allowance | Basis of Issue and Remarks |
|---|---|---|
| Pen, Lettering, LeRoy, w/guides | 1 | per draftsman SRS |

2. At present time the Proposed Table of Allowances authorizes only one (1) Pen, Lettering, LeRoy, w/guides per Section, and one (1) per 10 draftsmen.

a. One (1) set per each draftsman in this Section is essential, inasmuch as the LeRoy Pen is the principal instrument constantly in use by each SRS draftsman in preparing the outlays of graphs, charts and maps incorporated in the Summations.

b. The current allotment of authorized draftsmen allowed SRS is 10. Ten LeRoy sets are on hand. Replacement issues of pen points from the Z. I. are received only on the basis of two authorized sets. This makes it necessary

DECLASSIFIED E.O. 12065 SECTION 3-402 / NNDG NO. 775015

GENERAL HEADQUARTERS
SUPREME COMMANDER FOR THE ALLIED POWERS
CIVIL PROPERTY CUSTODIAN

APO 500

095 (30 JAN 1948)CPC/FP

30 JAN 1948

MEMORANDUM FOR: Ministry of Finance, Japanese Government
Tokyo, Japan

SUBJECT: Property in Japan Owned on 7 December 1941 by Rising Sun Petroleum Co., Ltd.

1. Reference is made to:

a. Memorandum for the Japanese Government, file AG 386.3 (6 May 46)CPC, SCAPIN 926, 6 May 1946, subject, "Procedure for Returning Property in Japan to Nationals of the United Nations," from General Headquarters, Supreme Commander for the Allied Powers;

b. Memorandum for the Japanese Government, file AG 386.3 (22 Nov 46)CPC/FP, SCAPIN 1354, 22 November 1946, subject, "Restitution of United Nations Nationals' Property Wrongfully Transferred," from General Headquarters, Supreme Commander for the Allied Powers.

2. There are transmitted herewith for action, in accordance with paragraph 1b of reference 1a, two copies of "Demand for Return of Property," file No. 06506 , submitted by Rising Sun Petroleum Co., Ltd.
The Ministry of Finance will return, by 1 March 1948 , one copy of the "Demand for Return of Property," with its comments to the Civil Property Custodian, and will retain one copy for its files.

3. The Ministry of Finance is directed to furnish the following additional information on each item of property covered by the "Demand for Return of Property": (1) the date taken by the Japanese Government; (2) name and address of the custodian; (3) date the custodian was appointed; (4) name of the present owner, and (5) name of the present occupant and the present location of all identifiable property known to have belonged to the petitioner.

4. The Ministry of Finance is further directed to submit photographs of the buildings and a dimension sketch of the land, showing all boundaries, where applicable.

1. Action is initiated on line No. 16864.
2. Suspense date - 5 Mar 48.
3. Previous correspondence - Memo for CLO, 12 Dec 47.

1 Incl
CPC Form 3, "Demand for Return of Property" (in dup)

PATRICK H. TANSEY
Brig Gen, USA
Custodian

DECLASSIFIED E.O. 12065 SECTION 3-402 / NNDG NO. 775015

GENERAL HEADQUARTERS
SUPREME COMMANDER FOR THE ALLIED POWERS
CIVIL PROPERTY CUSTODIAN

PHT/DHB/JWB/mv
APO 500

095 ( 30 JAN 1948 )CPC/FP

30 JAN 1948

MEMORANDUM FOR: Ministry of Finance, Japanese Government
Tokyo, Japan

SUBJECT: Property in Japan Owned on 7 December 1941 by Rising Sun Petroleum Co., Ltd.

1. Reference is made to:

a. Memorandum for the Japanese Government, file AG 386.3 (6 May 46)CPC, SCAPIN 926, 6 May 1946, subject, "Procedure for Returning Property in Japan to Nationals of the United Nations," from General Headquarters, Supreme Commander for the Allied Powers;

b. Memorandum for the Japanese Government, file AG 386.3 (22 Nov 46)CPC/FP, SCAPIN 1354, 22 November 1946, subject, "Restitution of United Nations Nationals' Property Wrongfully Transferred," from General Headquarters, Supreme Commander for the Allied Powers.

2. There are transmitted herewith for action, in accordance with paragraph 1b of reference 1a, two copies of "Demand for Return of Property," file No. 05506 , submitted by Rising Sun Petroleum Co., Ltd.
The Ministry of Finance will return, by 1 March 1948 , one copy of the "Demand for Return of Property," with its comments to the Civil Property Custodian, and will retain one copy for its files.

3. The Ministry of Finance is directed to furnish the following additional information on each item of property covered by the "Demand for Return of Property": (1) the date taken by the Japanese Government; (2) name and address of the custodian; (3) date the custodian was appointed; (4) name of the present owner, and (5) name of the present occupant and the present location of all identifiable property known to have belonged to the petitioner.

4. The Ministry of Finance is further directed to submit photographs of the buildings and a dimension sketch of the land, showing all boundaries, where applicable.

1. Action is initiated on line No. 16864.
2. Suspense date - 5 Mar 48.
3. Previous correspondence - Memo for CLO, 12 Dec 47.

1 Incl
CPC Form 3, "Demand for Return of Property" (in dup)

PATRICK H. TANSEY
Brig Gen, USA
Custodian

DECLASSIFIED E.O. 12065 SECTION 3-402 / NNDG NO. 775015



D R A F T

to depend on issues of pen points obtained through procurement demand on Japanese manufacturers. Japanese points in sizes #00 particularly are not of proper quality, break far too easily, and are not received in sufficient quantities because of difficulty in manufacture.

3. Deadlines for publications of Summations and completion of Monographs have ~~recently~~ been greatly ~~tightened~~ emphasized in ~~accordance~~ compliance with recently expressed desires of the Supreme Commander. This intensifies the need for an increase in LeRoy sets and for adequate replacement of pen points.

4. In view of the above facts, it is requested that Addendum to Table of Allowances be made in order that ~~three additional LeRoy sets may be authorized and issued~~ may be increased by the increase of authorized LeRoy sets from the 12 to 15. and the issue of replacement pen points ~~increased~~.

C. H. U.

DECLASSIFIED E.O. 12065 SECTION 3-402 / NNDG NO. 775015

To: S. R. S.

ATTN: SUPPLY OFFICER

TTMTT

DECLASSIFIED E.O. 12065 SECTION 3-402 / NNDG NO. 775015

GPA FORM 2
(4-46)

PROCUREMENT RECEIPT

Page 1 of 1 Pages

Received From: Tomiya Shoji Co.
Individual / Firm

Address: #5 2-chome Kofune-cho Chuo-ku, Tokyo Tokyo
Number and Street / City / Prefecture

Date Received: 13 Dec. 1947

Account Code (If Applicable to All Items): 800-0-11-000-1
Or Period Covered

(Partial) (Final) Receipt
Delete One

Receipt No. JPNZ-9080-A
(Read Instructions on Back of this Form) GHQ-3027

| Item No. | Specific Description of Items Received | Unit | Quantity | Enter Estimated Relative Value on U.S. Copies Only | |
|---|---|---|---|---|---|
| | | | | Unit Value | Total Value |
| 1. | Cover, Froht, photograph album, blue, 12" x 12". Three hole punch, 3" between holes. | ea. | 50 | | |
| 2. | Cover, Back, photograph album, blue, 12" x 12". Three hole punch, 3 between holes | ea. | 50 | | |
| 3. | Paper, stiff, photograph, mounting white, 12" x 12". Three hole punch, 3" between holes | ea. | 2,500 | | |
| 4. | Paper, Manifold, sulphite, white, 12" x 12", Three hole punch, 3" between holes | ea. | 2,500 | | |

Statistic Reports Section

---------- Last Item ----------

(Detach Along this Line for Additional Pages) Grand Total

(Space of Mil. Govt. Unit Only)

Previously Reported Value: None Revaluation: None

Net Change — (Increase) (Decrease) Total Record By: None
Delete One

Net Change — (Increase) (Decrease) Monthly Record By: None
Delete One

III Proc. Dist. Tokyo
Mil. Govt. Hq./&/Hq./Co. Unit / Prefecture
(Mil. Govt. Unit which Prepared Demand)

III Proc. Dist. Tokyo
Mil. Govt. Hq./&/Hq./Co./ Unit / Prefecture
(Mil. Govt. Unit which Processed Demand)

(Space for Receiving Agency Only)

Authority for Restricted Item: O/GPA SCAP, Approved s/KHL 17 Nov. 47
Letter Reference or Signature

Taken up on Property Records of: Not Applicable By: Expendable
Organization / Accountable Officer / Rank / Date
(Japanese Delivery) (Occ. Force Pick Up)
Delete One

Remarks:

Certified Correct as to Quantity and Items Except as Noted and Initialed:

By: Hubert T. Long S-4 Proc. Div.
Receiving Officer HUBERT T. LONG CAPT. INF. Organization Hq & Sv. Gp. Date 13 Dec. 1947

By: Akio Shimagyoji Tomiya Shoji Co. 13 Dec. 1947
Japanese Representative Agency Date

UNIT FILE

9720

DECLASSIFIED E.O. 12065 SECTION 3-402 / NNDG NO. 775015

## INSTRUCTIONS FOR USE OF FORM 2

(Local reproduction of this form is not authorized)

1. This form will be used to receipt for all Japanese supplies and facilities procured by procurement demand and will be the basis to support the suppliers', property owners', and contractors' claim for payment by the Japanese government. It will also serve to furnish information to higher headquarters of the value of supplies and facilities procured from Japanese civilian sources.
2. A receipt will be issued for every procurement demand prepared, unless such demand is voided.
3. The procurement receipt number assigned this receipt will be the same as was used on the demand for the supplies and facilities hereon with the following changes: Third group — A consecutive letter sequence for partial receipts starting with the letter A for the first delivery (partial receipt). Revaluations will be indicated by adding a letter sequence in inverse order starting with the letter Z for the first revaluation receipt. Illustration: KYTE-5 or KYTE-5-A or KYTE-5-Z or KYTE-5-AZ.
4. Item numbers will correspond to those used on the procurement demand. Item not delivered will be lined out.
5. The specific description of the supplies and facilities received will be as stated on the demand; verified, corrected, and amplified by inspection at time of delivery.
6. If a single account code is not applicable to all items on the receipt, enter after each item described, the proper account code given in Incl 5**.
7. Detach the lower half of all except the last page, if more than one page is required.
8. Relative value, calculated as given in Incls 6 to 10** will be entered on all copies *except those given to the Japanese.*
9. In reporting revaluations, the original or previously reported value, the correct or recalculated value, and the net change in value will be given, as explained in Incl 6**.
10. Under "Remarks", include the following, if appropriate:
    a. Statement as to the materials, equipment, labor and supervision furnished by occupation forces in filling demand.
    b. Reference to any attached statements, invoices, hand receipts, and inventories.
11. Alterations in the nomenclature and quantity of items will be initialed by both the receiving officer and the Japanese representative.
12. Both representatives will sign all copies of the receipt and inventory.
13. List of papers in connection with receipt, number of copies, and by whom prepared:

| | | |
|---|---|---|
| a. Procurement receipt, GPA Form 2 | 6 copies | Japanese Liaison Office |
| b. Procurement data, Form MGP 2 | 2 copies | Military government unit |
| c. Inventory | 4 copies | Requesting unit |
| d. Utilities statement of service rendered | 3 copies | Japanese Liaison Office |
| e. Japanese hand receipts | 2 copies | Japanese supplier, etc. |

14. Distribution of papers and member of copies:

| | | |
|---|---|---|
| a. Central Records | 1 copy | of 13a and b above |
| b.* Military government unit | 1 copy | of a, b, c, d, and e |
| c. Appropriate staff section | 1 copy | of a, c and d |
| d. Japanese Liaison Office | 2 copies | of a, |
| | 1 copy | of c and d |
| e. Japanese supplier, | 1 copy | of a and e |
| f. or Japanese property owner | 1 copy | of a, c and e |
| g. or Japanese contractor | 1 copy | of a and e |

15. Partial receipts will be prepared and distributed in the same manner.
16. Receipts issued to record revaluations will be prepared by the military government unit in duplicate. One copy will be forwarded to Central Records and one copy retained in file. A procurement data form will be prepared and attached to each copy of a revaluation receipt.
17. Military government unit will forward Central Records copy directly to Military Government Section, Headquarters Eighth Army, APO 343, attention Procurement Division.

* When receipt is received by a military government unit which did not prepare the demand, extra copies of each paper must be made for the files of the unit which prepared the demand.

** Inclosure references are to Eighth Army Operational Directive.

RECEIVED JAN 29 1948 SRS 11

DECLASSIFIED E.O. 12065 SECTION 3-402 / NNDG NO. 775015

GPA FORM 2
(4-46)

PROCUREMENT RECEIPT



Received From: Tokyo News Service
Individual / Firm

Address: Tokyo / Tokyo
Number and Street / City / Prefecture

Date Received: For December 1947
Or Period Covered

(Partial) (Final) Receipt
Delete One

Account Code (If Applicable to All Items): 800-0-11-000-1 (Read Instructions on Back of this Form)

Receipt No. JPNZ 9257 A

| Item No. | Specific Description of Items Received | Unit | Quantity | Enter Estimated Relative Value on U.S. Copies Only | |
|---|---|---|---|---|---|
| | | | | Unit Value | Total Value |
| 1. | Delivery of Tokyo News to Statistics and Reports Section for December 1947 | copies | 26 | | |
| | - - - - - - - - - - - - - - - - Last Item - - - - - - - - - - - - - - - - | | | | |

HFL/mn

(Detach Along this Line for Additional Pages) Grand Total

(Space of Mil. Govt. Unit Only)

Previously Reported Value: None Revaluation: None

Net Change — (Increase) (Decrease) Total Record By: None
Delete One

Net Change — (Increase) (Decrease) Monthly Record By: None
Delete One

III Proc. Dist. Mil. Govt. Hq. & Hq. Co. Tokyo
Unit / Prefecture
(Mil. Govt. Unit which Prepared Demand)

III Proc. Dist. Mil. Govt. Hq. & Hq. Co. Tokyo
Unit / Prefecture
(Mil. Govt. Unit which Processed Demand)

(Space for Receiving Agency Only)

Authority for Restricted Item: 2 Ind to Ltr. Hq & Sv. Gp. SCAP AG 400.12 (16 July 47) GPA dtd 22 Sept 47 (Japanese Delivery) (Occ. Force Pick Up)
Letter Reference or Signature / Delete One

Taken up on Property Records of: N/A By: Expendable
Organization / Accountable Officer / Rank / Date

Remarks:

Certified Correct as to Quantity and Items Except as Noted and Initialed:

By: Hubert F. Long S-4, Proc. Div., Hq & Sv. Gp. 17 Jan. 1948
Receiving Officer / Organization / Date
Hubert F. Long Capt. Inf.

By: M. Maruyama Tokyo News Service 17 Jan. 1948
Japanese Representative / Agency / Date

UNIT FILE

DECLASSIFIED E.O. 12065 SECTION 3-402 / NNDG NO. 775015

## INSTRUCTIONS FOR USE OF FORM 2

(Local reproduction of this form is not authorized)

1. This form will be used to receipt for all Japanese supplies and facilities procured by procurement demand and will be the basis to support the suppliers', property owners', and contractors' claim for payment by the Japanese government. It will also serve to furnish information to higher headquarters of the value of supplies and facilities procured from Japanese civilian sources.
2. A receipt will be issued for every procurement demand prepared, unless such demand is voided.
3. The procurement receipt number assigned this receipt will be the same as was used on the demand for the supplies and facilities hereon with the following changes: Third group — A consecutive letter sequence for partial receipts starting with the letter A for the first delivery (partial receipt). Revaluations will be indicated by adding a letter sequence in inverse order starting with the letter Z for the first revaluation receipt. Illustration: KYTE-5 or KYTE-5-A or KYTE-5-Z or KYTE-5-AZ.
4. Item numbers will correspond to those used on the procurement demand. Items not delivered will be lined out.
5. The specific description of the supplies and facilities received will be as stated on the demand; verified, corrected, and amplified by inspection at time of delivery.
6. If a single account code is not applicable to all items on the receipt, enter after each item described, the proper account code given in Incl 5**.
7. Detach the lower half of all except the last page, if more than one page is required.
8. Relative value, calculated as given in Incls 6 to 10** will be entered on all copies *except those given to the Japanese.*
9. In reporting revaluations, the original or previously reported value, the correct or recalculated value, and the net change in value will be given, as explained in Incl 6**.
10. Under "Remarks", include the following, if appropriate:
    a. Statement as to the materials, equipment, labor and supervision furnished by occupation forces in filling demand.
    b. Reference to any attached statements, invoices, hand receipts, and inventories.
11. Alterations in the nomenclature and quantity of items will be initialed by both the receiving officer and the Japanese representative.
12. Both representatives will sign all copies of the receipt and inventory.
13. List of papers in connection with receipt, number of copies, and by whom prepared:

| | | |
|---|---|---|
| a. Procurement receipt, GPA Form 2 | 6 copies | Japanese Liaison Office |
| b. Procurement data, Form MGP 2 | 2 copies | Military government unit |
| c. Inventory | 4 copies | Requesting unit |
| d. Utilities statement of service rendered | 3 copies | Japanese Liaison Office |
| e. Japanese hand receipts | 2 copies | Japanese supplier, etc. |

14. Distribution of papers and member of copies:

| | | |
|---|---|---|
| a. Central Records | 1 copy | of 13a and b above |
| b.* Military government unit | 1 copy | of a, b, c, d, and e |
| c. Appropriate staff section | 1 copy | of a, c and d |
| d. Japanese Liaison Office | 2 copies | of a, |
| | 1 copy | of c and d |
| e. Japanese supplier, | 1 copy | of a and e |
| f. or Japanese property owner | 1 copy | of a, c and e |
| g. or Japanese contractor | 1 copy | of a and e |

15. Partial receipts will be prepared and distributed in the same manner.
16. Receipts issued to record revaluations will be prepared by the military government unit in duplicate. One copy will be forwarded to Central Records and one copy retained in file. A procurement data form will be prepared and attached to each copy of a revaluation receipt
17. Military government unit will forward Central Records copy directly to Military Government Section, Headquarters Eighth Army, APO 343, attention Procurement Division.

* When receipt is received by a military government unit which did not prepare the demand, extra copies of each paper must be made for the files of the unit which prepared the demand.

** Inclosure references are to Eighth Army Operational Directive.

RECEIVED JAN 29 1948 SRS

DECLASSIFIED E.O. 12065 SECTION 3-402 / NNDG NO. 775015

400.

Forecast of Miscellaneous Indigenous
Procurement for Occupation Forces Requirement

SRS

CG, Hq & Sv Gp.
Attn: S-4

15 January 1948

Reference letter, Hq & Sv Gp, HC 400.12 (2 Jan. 48) (HSD), 2 January 1948, subject: "Forecasting of Miscellaneous Indigenous Procurement for Occupation Forces Requirement", forecast of requirements for Statistics and Reports Section during the period 1 July 1948 to 31 December 1948 is enclosed.

2 Incls
Incl 1 - Adjutant General Section, Forecast
Incl 2 - Quartermaster Section, Forecast

- - - - - - - - - - - - - - - - - - - - - - - - - - C. H. U. - - - - - - - -

(6)

DECLASSIFIED E.O. 12065 SECTION 3-402 / NNDG NO. 775015

FORM A

FORECAST OF MISCELLANEOUS INDIGENOUS PROCUREMENT REQUIREMENTS (OTHER THAN OPERATION AND MANAGEMENT SERVICES)



REPORT CONTROL SYMBOL OGD-27

100
Acct Code

Statistics and Reports Section
Major Agency

GHQ SCAP
Command

Adjutant General SECTION

Beginning of forecast period 1 July 1948

End of forecast period 31 December 1948

| 1 Item | 2 Item | 3 Unit | 4 Quan Due In | 5 Quan on Hand | 6 1st Qtr Rqt's by months 1 | 2 | 3 | 7 2d Qtr | 8 3d Qtr | 9 4th Qtr | 10 Es'd $ Value |
|---|---|---|---|---|---|---|---|---|---|---|---|
| 1. | Mainichi | ea | 8 daily | 8 daily | | | | | | 8 daily | |
| 2. | Nippon Times | ea | 9 daily | 9 daily | | | | | | 9 daily | |
| 3. | Nippon Times (Bound Copy) | ea | 1 monthly | 1 monthly | | | | | | 1 monthly | |
| 4. | Rengo Press | ea | 1 semi monthly | 1 semi monthly | | | | | | 1 semi monthly | |
| 5. | Jiji Commercial News | ea | 1 daily | 1 daily | | | | | | 1 daily | |
| 6. | Jiji Home News Service | ea | 1 daily (to include all three daily editions) | 1 daily | | | | | | 1 daily | |
| 7. | Tokyo News (Okuyama Service) | ea | 1 daily | 1 daily | | | | | | 1 daily | |
| 8. | Economic News (Okuyama Service) | ea | 2 daily | 2 daily | | | | | | 2 daily | |

Items 1-8 used by Executive, Editorial, Statistics and Historical Divisions in preparing and checking material and statistical data for semi-weekly Operations Report, monthly Summation and Historical Monographs of Nonmilitary Activities of the Occupation of Japan; and by the Reference Library as material available for use by all Sections of GHQ, as required by Par. 3, G.O. No. 6, GHQ SCAP, 18 April 1947. Deliver to SRS.

Incl 1

DECLASSIFIED E.O. 12065 SECTION 3-402 / NNDG NO. 775015

FORM A

FORECAST OF MISCELLANEOUS INDIGENOUS PROCUREMENT REQUIREMENTS (OTHER THAN OPERATION AND MANAGEMENT SERVICES)

Page 1 of 3 Pages

REPORT CONTROL SYMBOL QGL-27

100
Acct Code

Statistics and Reports Section
Major Agency

Quartermaster SECTION

Beginning of forecast period 1 July 1948

End of forecast period 31 December 1948

GHQ SCAP
Command

| 1 Item No. | 2 Item | 3 Unit | 4 Quan Due In | 5 Quan on Hand | 6 1st Qtr Rqt's by months 1 | 2 | 3 | 7 2d Qtr | 8 3d Qtr | 9 4th Qtr | 10 Es'd $ Value |
|---|---|---|---|---|---|---|---|---|---|---|---|
| 1. | Blinds, Venetian, metal, 42"x60" | ea | 0 | 0 | | | | | | 29 | |
| | Required for windows in SRS. Present shades are unsatisfactory. SRS employs 78 people. Deliver to SRS. | | | | | | | | | | |
| 2. | Book shelves, 36"x18"x36" high, w/ two adjustable shelves, stain walnut. | ea | 0 | 9 | | | | | | 1 | |
| 3. | Cabinet, stationery, 52"x18"x72" high. Stain walnut. | ea | 0 | 2 | | | | | | 1 | |
| | Items 2 & 3 Normal replacement. SRS employs 78 people. Deliver to SRS. | | | | | | | | | | |
| 4. | Hall rack, clothing, 42"x60", stain walnut. | ea | 0 | 4 | | | | | | 1 | |
| | Normal replacement item. SRS employs 78 people. Deliver to SRS. | | | | | | | | | | |
| 5. | Stools, foot, 36"x18"x6" high. Stain walnut. | ea | 0 | 10 | | | | | | 1 | |
| | Normal replacement item, enabling draftsmen to reach all parts of drafting tables. Deliver to SRS. | | | | | | | | | | |
| 6. | Ladder, portable, metal, 9'6" long x 14" wide. Paint grey. (See sketch) | ea | 0 | 3 | | | | | | 1 | |
| | Normal replacement item to meet filing and reference operations prescribed by Par. 3, G.O. No. 6, GHQ SCAP, 18 April 1947. Deliver to SRS. | | | | | | | | | | |
| 7. | Lamp, desk, gooseneck, 12" high. | ea | 0 | 46 | | | | | | 4 | |
| 8. | Lamp, desk, fluorescent, 100 volt, 50 cycle, T-8 medium Bipin, w/tubes, 24". | ea | 0 | 7 | | | | | | 4 | |
| | Items 7 and 8 required for increase in personnel and normal replacement items. SRS employs 78 people. Deliver to SRS | | | | | | | | | | |

Incl 2[3]

DECLASSIFIED E.O. 12065 SECTION 3-402 / NNDG NO. 775015

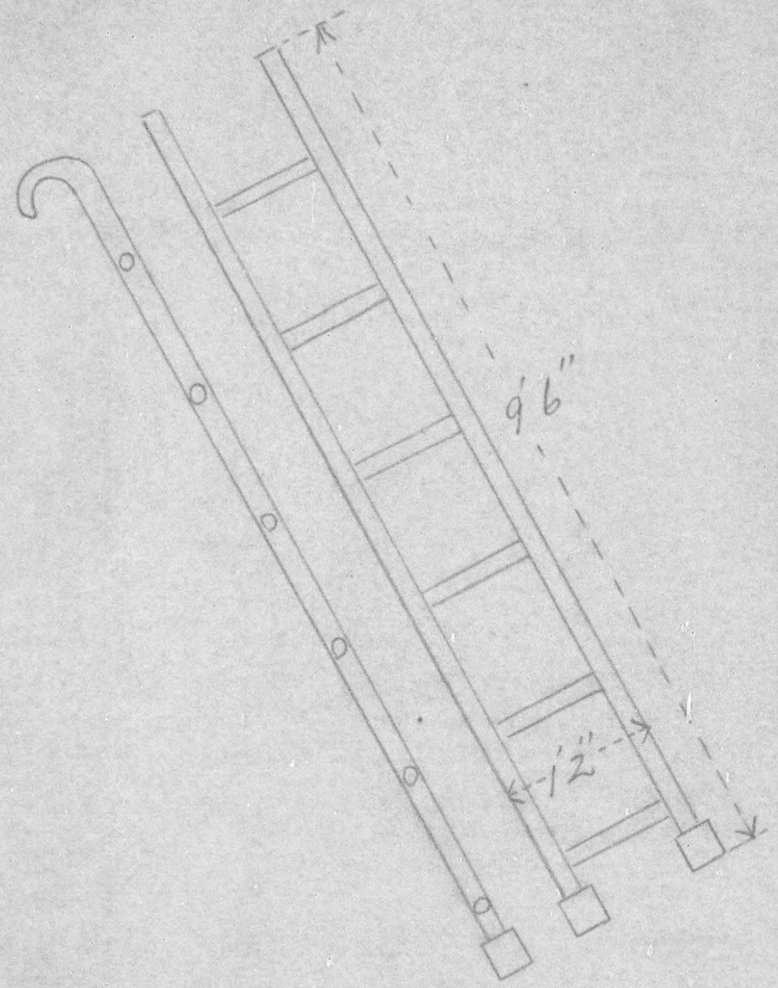


Ladder, portable, metal, 9 ' 6 " long X 1 ' 2 " wide, Line 6, QM Section, Forecast, SRS, GHQ, SCAP, QGD 27, 1 July to 31 Dec 48. Paint grey.

DECLASSIFIED E.O. 12065 SECTION 3-402 / NNDG NO. 775015

FORM A

FORECAST OF MISCELLANEOUS INDIGENOUS PROCUREMENT REQUIREMENTS (OTHER THAN OPERATION AND MANAGEMENT SERVICES)



REPORT CONTROL SYMBOL QGD-27

100
Acct Code

Statistics and Reports Section
Major Agency

Quartermaster SECTION

Beginning of forecast period 1 July 1948

End of forecast period 31 December 1948

GHQ SCAP
Command

| 1 Item No. | 2 Item | 3 Unit | 4 Quan Due In | 5 Quan on Hand | 6 1st Qtr Rqt's by months 1 | 2 | 3 | 7 2d Qtr | 8 3d Qtr | 9 4th Qtr | 10 Es'd $ Value |
|---|---|---|---|---|---|---|---|---|---|---|---|
| 9. | Screens, movable, partition, wood, 72"x72". Stain Walnut. | ea | 0 | 4 | | | | | | 1 | |
| 10. | Stand, ash tray. | ea | 0 | 0 | | | | | | 6 | |
| 11. | Tree, coat, 65" high. Stain walnut. | ea | 0 | 2 | | | | | | 1 | |
| | Items 2 to 11 required for increase in personnel and normal replacement items. SRS employs 78 people. Deliver to SRS. | | | | | | | | | | |
| 12. | Table, side, 54"x18"x30" high. Stain walnut. | ea | 0 | 5 | | | | | | 1 | |
| | Normal replacement item required to handle chart files for draftsmen and statisticians. Deliver to SRS. | | | | | | | | | | |
| 13. | Table, file, caster mounted, 31"x21"x32", Blonde furniture (See sketch) | ea | 0 | 2 | | | | | | 1 | |
| | Normal replacement item required to perform reference operations prescribed in Par. 3, G.O. No. 6, GHQ SCAP, 18 April 1947. Deliver to SRS. | | | | | | | | | | |
| 14. | Trays, ash, small, glass | ea | 0 | 22 | | | | | | 4 | |
| 15. | Board, bulletin, 3'6"x2'4". Paint border grey. | ea | 0 | 6 | | | | | | 1 | |
| | Items 14 and 15 needed to accomodate increase in personnel and for normal replacement items. SRS employs 78 people. Deliver to SRS. | | | | | | | | | | |
| 16. | Contemporary Japan, Review East Asiatic Affairs (Magazine) | ea | 2 quarterly | 2 quarterly | | | | | | 2 quarterly | |
| 17. | Japan Review (Magazine) | ea | 1 weekly | 1 weekly | | | | | | 1 weekly | |
| | Items 16 & 17 used by Executive, Editorial, Statistics and Historical Divisions in preparing and checking material and statistical data for semi-weekly Operations Report, monthly Summation and Historical Monographs of Nonmilitary Activities of the Occupation of Japan; and by the Reference Library as material available for use by all Sections of GHQ, as required by Par. 3, G.O. No. 6, GHQ SCAP, 18 April 1947. Deliver to SRS. | | | | | | | | | | |

Incl 23

DECLASSIFIED E.O. 12065 SECTION 3-402 / NNDG NO. 775015

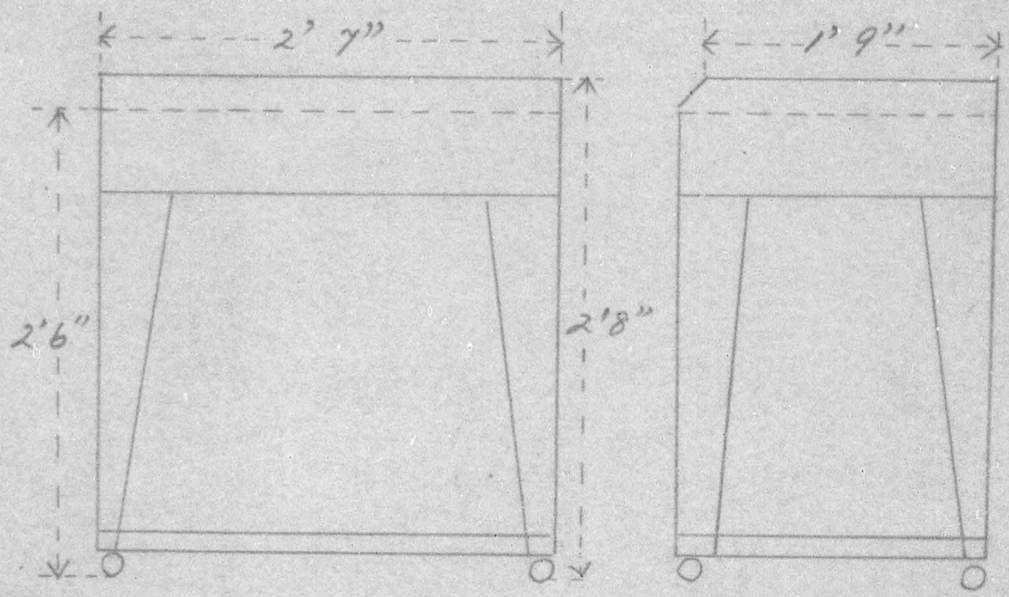


Table, file, caster mounted, 31 " X 21 " X 32 ". Blonde furniture.
Line No. 13, QM Section, Forecast, SRS GHQ SCAP,
QGD - 27, 1 July 48 to 31 Dec 48.

DECLASSIFIED E.O. 12065 SECTION 3-402 / NNDG NO. 775015

FORM A

FORECAST OF MISCELLANEOUS INDIGENOUS PROCUREMENT REQUIREMENTS (OTHER THAN OPERATION AND MANAGEMENT SERVICES)



REPORT CONTROL SYMBOL CGD-27

100
Acct Code

Statistics and Reports Section
Major Agency

Quartermaster SECTION

Beginning of forecast period 1 July 1948

End of forecast period 31 December 1948

GHQ SCAP
Command

| 1 Item No. | 2 Item | 3 Unit | 4 Quan Due In | 5 Quan on Hand | 6 1st Qtr Rqt's by months 1 | 2 | 3 | 7 2d Qtr | 8 3d Qtr | 9 4th Qtr | 10 Es'd $ Value |
|---|---|---|---|---|---|---|---|---|---|---|---|
| 18. | Oriental Economist (Magazine) | ea | 5 weekly | 5 weekly | | | | | | 5 weekly | |
| 19. | Democracy (Magazine) | ea | 1 monthly | 1 monthly | | | | | | 1 monthly | |
| 20. | Spotlight (Magazine) | ea | 1 monthly | 1 monthly | | | | | | 1 monthly | |

Items 18 to 20 used by Executive, Editorial, Statistics and Historical Divisions in preparing and checking material and statistical data for semi-weekly Operations Report, monthly Summation and Historical Monographs of Nonmilitary Activities of the Occupation of Japan; and by the Reference Library as material available for use by all Sections of GHQ, as required by Par. 3, C.O. No. 6, GHQ SCAP, 18 April 1947. Deliver to SRS.

Ind 2

DECLASSIFIED E.O. 12065 SECTION 3-402 / NNDG NO. 775015

Restricted

HEADQUARTERS
HEADQUARTERS AND SERVICE GROUP
GENERAL HEADQUARTERS
FAR EAST COMMAND

HC 400.12 (2 Jan 48) (HSD)

APO 500
2 January 1948

SUBJECT: Forecasting of Miscellaneous Indigenous Procurement for Occupation Forces Requirement

TO: See Distribution

1. References

a. Circular 163, Headquarters 8th Army, 1 October 1947, "Forecasting of Miscellaneous Indigenous Procurement for Occupation Forces Requirements.

2. The next Miscellaneous Indigenous Forecasts (Report Control Symbol QGD-27) will be due in S-4, Headquarters and Service Group not later 17 January 1948. This forecast will be performed in accordance with reference 1 a above, except as follows:

a. Circular 163

(1) Paragraph 4a: Forecasts will be submitted in duplicate.

(2) Paragraph 4b: Forecasts will cover requirements for the period 1 July - 31 December only.

(3) Paragraph 6a: Services already approved for the entire calendar year 1948 on the basis of previous forecasts will be excluded.

(4) Paragraph 7d & e: "On hands" and "dues-in" will be computed as of 1 July 1948.

(5) Instructions for Form . (Inclosure 4): Leave columns 6 - 8 and 10 blank. Insert total requirements for period in column 9.

(6) Instructions for Form B (Inclosure 5): Leave column 3 blank.

BY COMMAND OF BRIGADIER GENERAL STARR:

QUINTUS C. ATKINSON
Captain, Cavalry
Adjutant

Distribution:
"A & B"
plus
Staff Sections SCAP & FEC

Restricted

DECLASSIFIED E.O. 12065 SECTION 3-402 / NNDG NO. 775015

FILE

311.15 Inventory of Penalty Matter

SNS CG, Hq & Sv Gp
Attn: S-4 2 January 1948

In compliance with Check Sheet, Headquarters and Service Group, GHQ FEC, APO 500, HC 311.15, 29 August 1947, subject, "Inventory of Penalty Matter," the following report is submitted:

Inventory made 31 December 1947.

| Penalty Matter | No. on Hand | No. acquired during Reporting Period | No. on Requisition |
|---|---|---|---|
| Envelopes | 1639 | 8 | 0 |
| Labels | 0 | 0 | 0 |
| Wrappers | 0 | 0 | 0 |
| Cards | 0 | 0 | 0 |

Penalty matter on which carrying postage is paid.

| Penalty Matter | No. used |
|---|---|
| Envelopes | 65 |
| Labels | 0 |
| Wrappers | 0 |
| Cards | 0 |

0 self-addressed penalty envelopes enclosed with outgoing correspondence for authorized replies.

0 number of reply envelopes returned under the indicia.

C. H. U.

DECLASSIFIED E.O. 12065 SECTION 3-402 / NNDG NO. 775015

# QUARTERLY PENALTY MAIL STATEMENT UNDER PUBLIC LAW 364 AS AMENDED

REPORTS CONTROL SYMBOL AG-90

TO: GHQ Supply, Hq & Sv Gp

FROM: Statistics and Reports Section, GHQ SCAP

APPROPRIATION

1. QUARTERLY STATEMENT OF PENALTY MAIL INVENTORIES, AND SUCH MATTER PROCURED, USED, AND OTHERWISE DISPOSED OF DURING THE QUARTER ENDING 31 December, 1947, UNDER THE REQUIREMENTS OF PUBLIC LAW 364, AS AMENDED, FOLLOWS:

| | | ENVELOPES, ALL SIZES | LABELS | WRAPPERS | CARDS | TAGS | OTHER ARTICLES | TOTAL |
|---|---|---|---|---|---|---|---|---|
| (1) | a. BEGINNING INVENTORY FOR QUARTER: (*See note 1a*) | | | | | | | |
| (2) | (1) TOTAL NUMBER ON HAND REPORTED IN PREVIOUS QUARTER | | | | | | | |
| (3) | (2) ADJUSTMENTS | | | | | | | |
| (4) | (3) TOTAL ADJUSTED BEGINNING INVENTORY (*Line 2 plus line 3*) | | | | | | | |
| (5) | b. ACTUAL ACQUISITIONS DURING CURRENT QUARTER (*See note 1b*) | | | | | | | |
| (6) | (1) BY REQUISITION ON WAR DEPARTMENT SUPPLY AGENCIES | | | | | | | |
| (7) | (2) UNDER POSTMASTER GENERAL CONTRACTS | | | | | | | |
| (8) | (3) FROM GOVERNMENT PRINTING OFFICE | | | | | | | |
| (9) | (4) UNDER WAR DEPARTMENT ARMY PERMIT NO. | | | | | | | |
| (10) | (5) TOTAL ACQUISITIONS DURING QUARTER (*Total of lines 6 to 9, inclusive*) | | | | | | | |
| (11) | c. MAILINGS BY OTHER AGENCIES FOR WAR DEPARTMENT (*See note 1c*) | | | | | | | |
| (12) | (1) GOVERNMENT PRINTING OFFICE | | | | | | | |
| (13) | (2) OTHERS | | | | | | | |
| (14) | (3) TOTAL MAILINGS BY OTHERS (*Line 12 plus line 13*) | | | | | | | |
| (15) | d. TOTAL TO BE ACCOUNTED FOR (*See note 1d*) (*Total of lines 4, 10, and 14*) | | | | | | | |
| (16) | e. DEDUCTIONS ACCRUING DURING CURRENT QUARTER (*See note 1e*) | | | | | | | |
| (17) | (1) OBSOLETE | 0 | 0 | 0 | 0 | 0 | 0 | 0 |
| (18) | (2) DESTROYED, SPOILED, WASTED, OR USED FOR OTHER THAN MAIL PURPOSES | 0 | 0 | 0 | 0 | 0 | 0 | 0 |
| (19) | (3) USED FOR INTRA-THEATER OR INTER-CONTIGUOUS THEATER MAILING PURPOSES | 81 | 0 | 0 | 0 | 0 | 0 | 81 |
| (20) | (4) REPLY ENCLOSURES NOT RETURNED | 0 | 0 | 0 | 0 | 0 | 0 | 0 |
| (21) | (5) ITEMS ON WHICH CARRYING POSTAGE HAS BEEN PAID | 65 | 0 | 0 | 0 | 0 | 0 | 65 |
| (22) | (6) TRANSFERS TO OR MAILINGS FOR OTHER DEPARTMENTS | 0 | 0 | 0 | 0 | 0 | 0 | 0 |
| (23) | (7) ISSUED TO OTHER REPORTING AGENCIES OR ORGANIZATIONS | 0 | 0 | 0 | 0 | 0 | 0 | 0 |
| (24) | (8) TOTAL DEDUCTIONS (*Total of lines 17 to 23, inclusive*) | 146 | 0 | 0 | 0 | 0 | 0 | 146 |
| (25) | f. ENDING INVENTORY FOR QUARTER (*See note 1f*) | | | | | | | |
| (26) | (1) NUMBER ON HAND | | | | | | | |
| (27) | g. TOTAL ON HAND PLUS DEDUCTIONS (*See note 1g*) (*Line 24 plus line 26*) | | | | | | | |
| (28) | h. TOTAL PIECES MAILED DURING QUARTER (*See note 1h*) (*Line 15 minus line 27*) | | | | | | | |
| (29) | i. ADJUSTMENTS TO CORRECT MAILINGS IN PREVIOUS QUARTER (*See note 1i*) | | | | | | | |
| (30) | (1) PLUS OR MINUS ADJUSTMENTS | | | | | | | |
| (31) | j. TOTAL AMOUNT TO BE REPORTED FOR CURRENT QUARTER (*See note 1j*) (*Line 28 + or − 30*) | | | | | | | |
| (32) | k. TOTAL COST AT $ PER THOUSAND PIECES (*See note 1k*) | | | | | | | |
| (33) | l. UNFILLED ORDERS AT END OF CURRENT QUARTER (*See note 1l*) | | | | | | | |
| (34) | (1) FOR PENALTY MATTER REQUISITIONED FROM OTHER AGENCIES OR ORGANIZATIONS WITHIN THE WAR DEPARTMENT | | | | | | | |
| (35) | (2) FOR PENALTY MATTER ORDERED UNDER POSTMASTER GENERAL'S CONTRACT | | | | | | | |
| (36) | (3) FOR PENALTY MATTER ORDERED THROUGH GOVERNMENT PRINTING OFFICE | | | | | | | |
| (37) | (4) FOR PENALTY MATTER PROCURED OR PREPARED UNDER WAR DEPARTMENT ARMY PERMIT NO. | | | | | | | |

2. I CERTIFY that the foregoing report is true and correct to the best of my knowledge and belief.

NAME, GRADE, AND TITLE OF REPORTING OFFICER

T. M. B. HICKS, Captain, Infantry

WD AGO FORM 1 SEPT 47 195