INDEX TO VOLUME V

THE NICKELODEON AND MOTOGRAPHY

January 1 to June 30, 1911.

Including 346 pages of The Nickelodeon and 160 pages of Motography, with which The Nickelodeon was incorporated April 15, 1911.

THE NICKELODEON

MOTOGRAPHY

THE NICKELODEON

$2.00 Per Year | Published Weekly by ELECTRICITY MAGAZINE CORPORATION, Monadnock Building, Chicago | 10 Cents Per Copy

Vol. V | CHICAGO, JANUARY 7, 1911 | No. 1

THE NICKELODEON

PUBLISHED EVERY SATURDAY BY THE

ELECTRICITY MAGAZINE CORPORATION

MONADNOCK BULDING, CHICAGO

ED J. MOCK AND PAUL H. WOODRUFF, EDITORS — JAMES B. CRIPPEN, ASSOCIATE EDITOR

LONG DISTANCE TELEPHONE: HARRISON 3014

NEW YORK OFFICE: 1433 HARTFORD BLDG., 41 UNION SQUARE
LAURENCE F. COOK, Eastern Representative
TELEPHONE, STUYVESANT 1672

LONDON OFFICE: 36 MAIDEN LANE, COVENT GARDEN
S. RENTELL & CO., Representatives

Table of Contents

Terms of Subscription.—UNITED STATES, CUBA and MEXICO ..... PER YEAR $2.00
CANADA ..... PER YEAR 2.50
FOREIGN COUNTRIES WITHIN THE POSTAL UNION ..... PER YEAR 3.00
SINGLE COPY ..... .10

DISTRIBUTING AGENTS: The Western News Company and its International Branches.

NOTICE TO ADVERTISERS.—Changes of advertising copy should reach the office of publication not less than five days in advance of date of issue. Regular date of issue, the first and fifteenth of each month. New advertisements will be accepted up to within three days of date of issue, but proof of such advertisement can not be shown until the appearance of the edition containing it.

NOTICE TO SUBSCRIBERS.—Remittances should be made by check, New York draft or money order, in favor of THE NICKELODEON. Foreign subscriptions may be remitted directly by International Postal Money Order, or sent to our London office. The old address should be given as well as the new, and notice should be received two weeks in advance of the desired change.

ENTERED AS SECOND CLASS MATTER JANUARY 15, 1910 AT THE POST OFFICE AT CHICAGO, ILLINOIS, UNDER THE ACT OF MARCH 3, 1879.

Scene from the Vitagraph Feature Film "Water Lilies."

THE NICKELODEON

AMERICA'S LEADING JOURNAL OF MOTOGRAPHY

VOL. V . CHICAGO, JANUARY 7, 1911. No. 1

GREETINGS.

WHEN we say in this, the first issue of the weekly NICKELODEON, that we wish every one connected, however remote, with the film industry a most happy and prosperous New Year, we do so in no perfunctory manner. The wish is as hearty and whole-souled and sincere as any wish could well be, for it has in it something of selfishness. We ourselves are a part of the industry for which we are wishing prosperity and happiness. Indeed, in the two years of our existence we have come to be recognized as no small part. Upon the prosperity of the trade at large depends our own prosperity and our consequent happiness and satisfaction with life. In the two years past we have had much to be thankful for. In the year to come we look confidently forward to still more blessing; and in return we expect and promise to do all we can in our feeble way to aid the cause with which we have become identified.

The most prominent subject of this number of THE NICKELODEON is the manufacture of motion picture films. There is much to be said on this subject; an infinite amount, in fact, as it embraces the whole industry. The manufacture of motion pictures is a fine art. It is an art which embodies all of science, of literature, of humanity itself. In the poor space at our disposal we cannot attempt to cover all these diversified branches of our subject and we shall not try to. Suffice it to say that motion pictures have improved the past year and they will doubtless improve next year. If mistakes are being made they are being discovered, too, and with the alert minds engaged in the business discovery means immediate rectification. A little better photography here, a little more attention to details there, a broader conception of art in another place and we have nearly attained perfection. And "nearly" is quite as near as we can expect to get in the short time we have been engaged in this industry.

In the pages of this number we have let some of the more prominent film manufacturers of this country tell their own story in their own way. We have no comment to add. You of the trade who read this are familiar with their work and know how to judge of their efforts. We might repeat the usual platitudes, urging quality rather than quantity, art rather than action, excellence rather than ingenuity. But those things are already pretty well understood and the constantly improving order of selection exercised by the exhibitor will convince the doubting manufacturers more thoroughly and quickly than would a hundred editorials.

In closing we want to compliment you all on the wonderful strides the industry has made under your guiding hand and on the wonderful prospects which even a slight glimpse into the future reveals.

POOR PROJECTION IN GOOD THEATERS.

IT might naturally be supposed that the legitimate theater, with its enormous expenditure of money for its fittings and apparatus, would surround its incidental use of motion pictures with the best possible conditions. The truth is that the very poorest possible projection of pictures is to be found among the best theaters. In this we are, of course, referring to the better class of vaudeville houses and so-called music halls, since the regular playhouse seldom uses pictures. In these high class vaudeville houses, where the admission price ranges perhaps as high as a dollar or a dollar and a half, motion pictures are used merely to fill in, a sort of single act in the vaudeville program, or perhaps a chaser or "supper show."

No doubt the purely auxiliary nature of the pictures in such a theater is sufficient excuse in the mind of the manager for neglecting their proper presentment. Thus we find their projectng or operating rooms located wherever vacant space affords the opportunity. As a rule such theaters are not primarily designed for the projection of motion pictures and the result is that the operating booth must be located wherever it can find a place. That place is generally high up above the gallery, where if any seating capacity is sacrificed it will be of the least profitable sort and where the construction of the booth itself need not be of an expensive nature. The inevitable result is that the pictures are projected downward at a considerable angle, meeting the screen in a decidedly oblique manner. The bottom of the screen being considerably farther from the projection apparatus than the top, the bottom of the picture is correspondingly larger. Furthermore, the height of the picture is so extended by its inclined meeting with the screen that the figures are often distorted to an extraordinary degree. And this distortion acts not only to lengthen the pictures upon the screen, but to convey to them some of the characteristics of the picture as a whole. That is to say, as the picture is wider at the bottom than it is at the top, so the details of the picture are wider at the bottom than they are at the top. Thus the human figure will usually be considered larger than normal at its feet and considerably smaller at the head. It is needless to comment upon the effect produced upon an intelligent audience by this distortion.

The high class vaudeville house numbers among its patrons many who never attend a picture theater. This class of patronage, fortunately growing smaller day by day, can only judge of the merits of the motion picture by what they see of it at their favorite show house. When we add to the case against the vaudeville house of bad projection, a tendency to display only the cheapest, oldest and dirtiest pictures obtainable, we should not be surprised that there are many people still remaining in this country who have a very bad idea of the motion picture. The influence of the

straight picture theater is broader and better than that of the vaudeville house, however good and high grade the latter may be. But the vaudeville house still retains considerable influence, and that influence is unquestionably being exercised to the disadvantage of motion pictures.

We believe it is the duty of every exchange man who serves films to vaudeville houses to do his utmost to improve the quality of the service he furnishes and to aid in perfecting the projection in those houses. We believe also that the Motion Picture Patents Company, in the furthering of its promise to act at all times for the good of the art, should take this matter in hand and direct its affiliated exchanges not to supply service to those houses which wilfully neglect the first essentials of good projection and good selection. We are doing much to improve our own service and methods as exhibitors of straight motion pictures, but meanwhile we are allowing another branch of the entertainment profession to discount all our efforts and to create an impression unfavorable to our industry.

ON FILMING A CLASSIC.

"CLASSIC" is here used in a rather loose and unrestricted sense, as it generally is used by adherents of the photoplay, meaning vaguely a kind of piece that is laid in a bygone era and one which aims to evoke some kind of poetic and idealistic illusion differing from that illusion of mere reality with which photoplays are ordinarily concerned. "Costume play," "historical piece," "poetic drama," variously convey a similar idea. Often the subject is one that is already known to the drama and universally admired, or it may be an adaptation from some story of poetry or fiction, or taken from the pages of history or the bible, or it may be taken out of the producer's own head.

Whatever the source of the plot, the conditions already named prevail; the time and people differ from our own, and there is an effort to create an idealistic illusion.

It is needless to say that such subjects are the hardest kind to present. They demand an expensive outlay of costumes and scenic effects, deep and careful research into the manners and customs of the era depicted, actors possessing special qualities of grace and dignity and comeliness, faultless photography, and above all a Producer, a very king of producer, who shall, in addition to his usual qualifications, possess the eye of an artist and the mind of a poet in order to engineer and bring into being that idealistic illusion which is so necessary to the proper effect of the piece.

Each of these requisites is difficult in itself, and yet each must be well-nigh perfect, and combined with all the others in balance and harmony, before we have a satisfactory classic. A great many classics are produced in America, but a truly satisfactory one is a rare bird, seeming to be more indigenous to foreign climes. The classics that come from the hands of American producers are usually quite satisfactory on the material side, the mountings are lavish, the groupings are handled with good effect, the chronological details are passably accurate, and the pictures, as pictures, are often really beautiful; but as for weaving that magic spell, that poetic and ideal essence which forms the charm of the original, they fall in most cases woefully short. And when this is lacking, what good is the rest? It is hard to point out always just wherein any particular classic production does fail, because the failure usually lies in nothing very tangible, the spectator experiencing a dull disappointment that is located in no particular spot. The production simply fails to create that idealistic illusion which is expected. There are one or two causes, however, that nearly always attend this failure, and it may be of profit to point them out.

One source of disillusionment lies with the actors. The usual stock players do well enough in the part of Tom, Dick and Harry, Nellie and Kate; but when it comes to assuming the roles of Prince Florizel and the Lady Eglantine, they must either look and be the part, or else the whole performance becomes an empty pretension and falls flat. Prince Florizel and Lady Eglantine must have beauty and polish and grace and distinction; they must be ideal, "perfectly grand," and we'll have them no less. Romance, painting, poetry, even history, demands it. That few of our stock actors possess the requisite qualifications for such roles goes without saying. Special physical endowments and special histrionic training are required. That is why foreign producers engage special actors for their classical presentations, realizing full well that their ordinary players will not do.

Aggravating and emphasizing the deficiencies of the actors as above indicated, is the style of "close-up" photography which now prevails. This practice of stationing the camera almost within reaching distance of the performers is like putting everything under the magnifying glass. All the crass details obtrude with hard angularity. We see the make-up of the actors, the lip paint and darkened eye-brows and the falsity of their wigs. Owing to the absence of retouching wrinkles are augmented and the flesh takes on a pock-marked appearance that is vastly unbecoming. Every detail of the *tout ensemble* suffers in like manner. Wherever there is anything false or flimsy we spot it at once, because things are viewed at such close range. It is like watching a dramatic performance from a stage box. Under such circumstances there is no chance for illusion. Nowhere does the well-known adage, "Distance lends enchantment to the view," apply with such force as to dramatic performances. Distance is an absolute requisite to any kind of idealistic illusion. Therefore, it would seem as if the "close-up" style of photography should be uncompromisingly abandoned when a classical production is on the tapis.

Another respect in which classics commonly fail is in faulty and jumbled adaptation. A knowledge of the original is often necessary before the photoplay form becomes comprehensible. The effect on one who is not familiar with the original is bewildering, and this results either in boredom or irritation.

Some day we will produce satisfactory classics in America, but for the present there is no class of photoplays so vexatious and disappointing. They aim high, and missing the mark, their fall is all the greater. Every deviation from the ideal produces a jolt. They are like music that wanders from pitch, like poetry that dips into bathos, like paintings that grate on the eye. There is no particular reason why satisfactory classics should not be produced in America; in fact, several have been; but the majority belong to the doubtful category of half successes. Classics always win easy praise, and this has drugged producers into the belief that their half-successes approached perfection. A more exacting ideal must be established.

Making the Pictures

By David S. Hulfish*

A SIMPLE SUBJECT.

When the subject is simple, such as a picture of shipping in a harbor, the making of a motion picture film is pretty much the same as making a lantern slide of the same scene, the difference being only in the materials and the machines used.

FIXED VS. MOTION PICTURES.

A little table may be made here showing comparatively the process and materials for making a fixed picture lantern slide and for making a motion picture film of the same scene.

FOR MAKING LANTERN SLIDE:	FOR MAKING MOVING PICTURE:
Ordinary camera.	Special camera.
Plate with fast emulsion.	Strip film with fast emulsion.
Develop in tray or tank.	Develop in tray or tank.
Dry the negative.	Dry the negative.
Make contact print on glass plate with slow emulsion.	Make contact print on strip film with slow emulsion.
Develop in tray or tank.	Develop in tray or tank.
Dry and cover with glass.	Dry.

Coming down to the final analysis of operations, the making of a motion picture film is even simpler than the making of a lantern slide, since when the moving picture print is dry it is ready for the projecting lantern, whereas the lantern slide requires still further operations of mounting it before it is ready for projection. To become thoroughly familiar with the making of lantern slides with a fixed camera is good preliminary practice for the making of moving picture films.

Filming the Matterhorn.

THE RAW FILM.

Taking up in detail the apparatus, materials and processes of making moving pictures, the first item to be considered is the strip film which is used, first for the making of the negative from the subject itself, and later for making a contact print or positive from the negative, for projection.

The manufacture of the celluloid, and the coating of it with the sensitive emulsion should not be attempted except by a thoroughly competent factory, and after thorough test of all details. The celluloid is made in sheets 22 inches wide and 200 or 400 feet long and 1/200 of an inch thick; this is coated with a photographic emulsion on one side only, giving a "curling" film as it is known in the trade, and when this broad strip is dry it is split into strips 1⅜ inches wide. It may be bought from the manufacturer in these strips, unperforated, or may be bought perforated by the manufacturer. Also, it may be bought coated with fast emulsion for the making of negatives, or with slow emulsion for the making of positive prints.

At the Mosque of Omar, Persia.

THE MOTION PICTURE CAMERA.

The camera has a good, fast lens, say an anastigmat working to an aperture of *f/6* or thereabouts, and with a focal length of two to four inches. Lenses are offered which work at an aperture of *f/3.5* at focal lengths of two to three inches, giving a sharp image about an inch in diameter. The camera is arranged to take a picture one inch wide by three-quarters of an inch high.

Outside of the camera box is a crank, and inside of the box are two mechanisms driven by the crank. The first of these is the film shift mechanism, which drives a roller with teeth in step-by-step jerky manner. The film, which is put in the camera, is carried over this roller and the teeth of the roller catch the holes in the edge of the film strip. At each jerk of the toothed roller, when driven by the crank, the film is jerked down three-quarters of an inch, or just the height of one little picture. The action is the same as that of a projecting machine.

The other mechanism of the camera is the shutter. This is arranged to shut out all light from the film when the handle is not turned, and when the handle is turned it shuts out the light while the film is being jerked down, step-by-step, but admits the light through

*From the author's book "The Motion Picture—Its Making and Its Theater. Photographs by courtesy of Charles Urban.

the lens during a period when the film is at rest, between jerks.

CAMERA OPERATION.

The shutter and the film mechanism work in co-operation, exposing the film to the light from the lens and jerking down a new section of film in darkness, and again exposing and jerking, until a number of little pictures are made in a row down the middle of the strip, except that they are negatives, and as yet undeveloped.

The shutter may be opened about one-half of the time, the film being shifted in darkness during the remaining time. The speed of taking the pictures is from ten to twenty per second, depending to some extent upon the effect desired upon the screen when projected.

DEVELOPMENT OF THE NEGATIVE.

Several methods of development possible for motion picture films will be described. In the work of the professional moving picture maker, the lengths of film frequently will be so great that only the drum method is possible. The constantly increasing number of amateurs now making moving pictures and constantly experimenting with the subject will include many workers whose needs may be met with simpler and more convenient as well as less expensive apparatus. The professional camera makes an image ¾ by 1 inch, running sixteen images to the foot of film strip. There are on the market cameras designed for amateur use, making pictures smaller in size, some of them measuring only one-half the dimensions given. In such a camera, pictures run thirty-two to the foot of film, and when taken at a rate of sixteen images per second the film measures but one-half of a foot per second of exposure. A scene lasting for ten seconds is sufficiently long for experiment, and probably as long as the average scene taken by the amateur, while a developing outfit suited for five-foot lengths of film may be used to develop longer strips by cutting into five-foot lengths. This would mean the loss of an image or two only every two seconds when the picture is projected upon the screen.

Railway Motography in Borneo.

DRUM DEVELOPMENT.

The process best suited to general work is drum development. This method permits the handling easily of film strips up to 400 feet in length, which is as long as film can be bought, and twice as long as the capacity of the ordinary moving picture camera's film reel box.

In drum development, the exposed strip of film is wound upon a drum and developed by revolving the drum while its lower portion dips into a tank of developing solution.

In this method, the drum is hung upon supports, and the film is wound spirally with the sensitive surface outward. Naturally, with such a method, double-coated film, or non-curling film, can not be used. The drum then is turned above the tank of developer, with its lower surface running in the developer; then lifted to a tank of water and similarly turned; then to a tank of fixing solution; then to several successive tanks of wash water; then to a tank containing a glycerine mixture. The film may be dried without removing it from the drum by suspending the drum in a room where the air is at a temperature of 80 degrees, and turning the drum until the film is dried. A small motor of any kind is a convenience for this process.

The preferable method of drum development is to have a developing drum of slats, so that it may be cleaned thoroughly and easily, but to dry a film upon such a drum will leave drying marks upon the finished print. Therefore, the print is reeled off while wet onto a drum having a smooth surface preferably of wood covered with cheese cloth. The drying drum must be turned until the film is dry, or drops of water will gather on the film at the under surface of the drum and will leave marks upon the finished print.

PIN-TRAY DEVELOPMENT.

For pin-tray development, a pair of crossed bars are provided with pins, say, one-half inch apart, and as high as the width of the film. The exposed film is wound spirally upon these pins, thus arranging the film in flat pancake form, much like a large flat clock spring coiled up, which then is placed in a tray and developed as a photographic plate would be developed. The tray should be sufficiently deep to permit the developer to cover the film completely. The film, after passing through trays containing in succession all of the solutions and wash waters required and finally the glycerine bath, may be dried upon the pin arms, but preferably it is reeled off onto a drying drum and turned in warm air while drying. In drying upon the pin arms, the film may be permitted to dry with the arms horizontal; thus all of the water drops will collect upon the lower edge of the film and not upon any of the images, and the film need not be kept in motion while drying. However, drying the film upon the pin arms is liable to leave marks caused by the pins which will be visible in the finished print.

HAND DEVELOPMENT.

With short pieces of film, the two ends of the film may be grasped, and the film drawn through the solutions and washes by lifting first one end and then the other; this should not be attempted with too long a film, nor with too small a dish of developer. Four feet is probably the maximum length of film, unless considerable skill is possessed.

DAYLIGHT DEVELOPMENT.

Obviously, daylight developing machines may be specially built to accommodate long length of film.

When the film has been made ready for such a machine, it may be developed by "machine" or "tank" methods, either in daylight tanks or in the darkroom.

DOUBLE-REEL DEVELOPMENT.

For short lengths only, the print may be reeled upon a reel or drum, and then reeled off onto another similar reel or drum, passing through a tank of developer between the two reels; it is then reeled back and forth between the two reels until development is complete. The tray containing the developer then is replaced with one containing water, then fixing bath, etc., and so on until the film is ready to dry, when it is reeled onto a drying drum. With reels one foot in diameter, three feet of film per turn is taken up; and lengths of twenty-five to fifty feet may be handled in this manner. Sufficient length of dead film strip, or "leader" must be attached between the film to be developed and the drum at each end to permit the film ends to reach the developing solutions. Small rollers or weights under which the film may run are convenient for keeping the loop of film in the developer between the two reels. This method is a simple modification of the "hand development" method of working strip films, but posseses many disadvantages.

BELT DEVELOPMENT.

Belt development is practically only for short lengths of film. The two ends of the film to be developed are fastened together, and the "belt" thus formed is passed over a reel, drum or wheel of large diameter, but leaving the film with sufficient slack to dip into the tray of developer set beneath the drum. The tray or its contents are changed as the progress of development requires, and the belt remains upon the drum in constant motion until ready for drying, or even until dried, if desired.

PRELIMINARY TESTS FOR DEVELOPMENT.

When the exposure value is not known absolutely, and the development therefore is somewhat in doubt,

The Boer War Through an Urban Camera.

pieces a few inches long may be cut from the end of the strip of the film and developed to determine what the proper development of the long strip should be. In making an exposure upon a subject the crank may be turned upon the subject a few turns before or after the action which it is desired to record, this end then being available for tests in development.

FORMULAE.

The entire subject of chemical formulae may be disposed of summarily by the statement that any developer which is suitable for the development of dry plates is suitable for the development of motion picture negatives, and any developer suitable for the development of lantern slides on glass is suitable for the

Motographing the Russo-Jap War.

development of motion picture positive prints. The photographer should become proficient with plates or flexible hand camera films before attempting motion picture films.

INSPECTING.

The finished negative may be inspected by drawing through the hands before a window. The illustration on page 25 is apt on this point. Any image showing a fault may be cut out and a splice made. The omission of a single image is less objectionable than the appearance of a fault upon the screen, but if faults are at all numerous the negative should be discarded and a new exposure made upon the subject if feasible. If a new exposure is not feasible, as is the case with public events recorded by motion pictures, retouching may be done, but it is a tedious and expensive process. Dust should be watched for and should be avoided in all operations.

MAKING THE PRINT.

Having completed a satisfactory negative, the next step is the making of the print. The steps of the process, in order, are printing, developing, drying, inspecting.

EXPOSURE OF PRINT.

As in making any photographic print, the sensitive surface of the material for the positive must be placed in contact with the film side of the negative and light in proper quantity must pass through the negative to the material which is to become the positive print. With a negative 200 to 400 feet in length, as is the case with a motion picture negative, the ordinary type of photographic printing frame is impracticable, and machines are used which print a portion at a time until the whole strip is printed.

PRINTING MACHINES.

The printing machines must take a roll of the negative and a roll of raw film stock coated with slow emulsion, on which the positive images are to be

printed, and must pass these two photographic ribbons together in front of a suitable light. The ribbons then may fall into a basket (in the darkroom) or may be reeled up separately, automatically.

STEP-BY-STEP.

A step-by-step printing machine is very similar to a motion picture camera or projecting machine. It has a step feed for both negative and positive films, and a shutter controlling the amount of light admitted to each image. Usually the person in charge of the machine is able to observe the progress of the work by watching the light upon the positive film, through a red glass. The negative film must be kept "framed" in the printing machine.

CONTINUOUS.

A continuous-movement printing machine merely draws the two films, the negative and positive, together, in front of a lamp, and at a steady speed. Great accuracy of construction is required in this type of machine. When the two films are drawn by one sprocket, one is likely to slip, or "creep" upon the other. With two sprockets, one for each film, the movement of the two sprockets must be exactly the same at all times.

Camera Man on the Zambesi River, Africa.

The continuous-movement type of printing machine is the more rapid, but unless the machine is absolutely accurate the step-by-step printing machine will give the better results.

PRINTING WITH THE CAMERA.

The method usually used by amateurs for printing from a negative is to run the two films together through the camera. The negative and the raw "slow" film may be reeled up together, face to face, the raw film underneath as it runs on the reel, and the raw film cut off to the length of the negative. The ends of the two are threaded through the sprocket of the camera, the lens is removed and the camera without any lens is set to face the sky, or an electric lamp. The two films then are ground through together, the shutter working as in taking the picture, but unless the light is very strong the grinding through will be much slower.

PRELIMINARY TESTS FOR PRINTING.

Tests must be made with short pieces, say a foot long, of the printed film until the proper speed of printing for a given lamp is learned. This will vary with different densities of negatives, just as in making glass lantern slides.

PRINT DEVELOPMENT.

The development of the print is substantially identical with the development of the negative in all its processes, including the final glycerine bath. The differences are such as might exist between the development of a dry plate into a negative or into a lantern slide. The darkroom conditions for a "safe" light are less rigorous, by reason of the slower emulsion with which the positive film is coated.

SECTIONAL PRINTING.

Very long picture films necessarily are printed in parts or sectional lengths, and these parts are inspected and spliced together and finally reeled up ready for the projecting machine.

Motion Pictures in the Orient

Consul John A. Ray, of Maskat, capital of the Arabian sultanate of Oman, reports as follows concerning the growing taste for moving picture shows in the middle east:

An American has been giving moving picture shows at Maskat during March and meeting with great success. He opened a hall and gave public exhibitions for several nights. The prices of seats were 65, 33, and 16 cents. Private entertainments were given in the sultan's palace and in the houses of some of the wealthier residents. In one case the showman received $260 for an entertainment, and he reports that he received nowhere less than $50.

The same man has been in the middle east for more than a year, entering Turkey at Aleppo and coming to the Persian gulf by way of Bagdad. He has given shows at Mohammerah, Bassorah, and Bushire. He left Maskat for Aden. Success seems to have crowned his efforts everywhere, as the Arabs are very fond of such entertainments, and the wealthier sheiks quite generous.

The machine used was of French manufacture and so were most of the films. The subjects were largely Turkish, with scenes from the Arabian Nights. The greatest difficulty the operator had found was in obtaining a supply of new films and of chemicals. Films had to be purchased outright and chemicals imported from India. The chemicals were needed for the limelight, as electricity is unobtainable.

It is a question of only a short time until every important town in the middle east has a moving picture theater. At present France has practically a monopoly of the business of furnishing films, but there seems to be no reason why American manufacturers might not share in the business.

No Barkers in Kansas City

Proprietors of all moving picture shows and other places of amusement in Kansas City, Mo., have been notified by order of Acting Chief of Police Snow that they will be held liable for allowing men in their employ to solicit patronage on the street by "barking" for their attractions. Chief Snow says he has received numerous complaints and has instructed all officers to see that the practice is suppressed at once.

The Original Vitagraph Studio at Greenfield, Brooklyn, N. Y.

The Vitagraph Plant and Personnel

FIFTEEN years ago when Messrs. William T. Rock, J. Stuart Blackton and Albert E. Smith unfurled to the business breeze the banner of the Vitagraph Company of America, little did the world at large and the motion picture interests know that it was destined to grow to such large proportions and to be a representative concern of both hemispheres with branches in every metropolis.

Starting at 116 Nassau street, where it still has its New York offices, its has grown steadily until today the Vitagraph studios and works at East Fifteenth street and Locust avenue, Brooklyn, occupy one whole square of land surrounded by a high concrete block wall. Within this enclosure there are six buildings containing four large studios, complete mechanical and photographic departments, printing, developing, tinting and accomodations for costumes, scenic painting, carpenter shops and upholstering. In addition to this they have large manuscript, reference, publicity and negative departments. Other features that make the Vitagraph plant a model institution are its private and bookkeeping offices, lunch, lounging and dressing rooms.

It employs over two hundred persons in its several divisions, including a stock company of forty actors and actresses and is often obliged to engage "extras" to make up the casts for the larger and more elaborate life portrayals which are frequently produced; eight directors preside over the studio and twelve camera men are at their service. There are scene setters and property men who are thoroughly drilled experts in the arts that are necessary to make

The New Vitagraph Plant, Brooklyn.

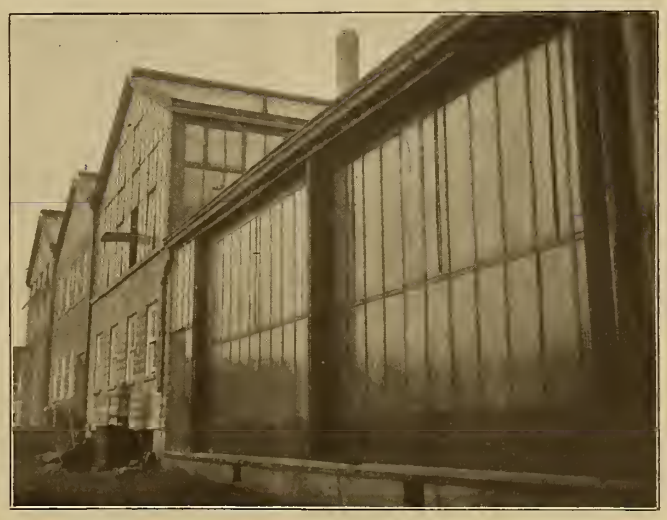

Modern Studio of the Vitagraph Company.

A Group of Vitagraph Players.

them capable and efficient in all the details for which the Vitagraph life portrayals are famous.

The five reels of "Moses" was a signal and stupendous undertaking, the largest ever produced, and met with unqualified approval and pronounced success, astonishing everybody by its perfection. "Uncle Tom's Cabin" in three reels has received universal commendation. Recently "Francesca da Rimini" has dazzled and held spell-bound audiences; and these have led to the announcement of Dicken's "Tale of Two Cities" in three reels, to be followed by J. Fenimore Cooper's "The Last of the Mohicans" and the Biblical production "The Deluge."

It may be of interest to refer to a few of the life portrayals of late date that have made the art of Vitagraph acting notable, namely, "The Turn of the Balance," "White Rose Leaves," "A Life for a Life," "Two Waifs and a Stray," "Convict 796," "A Modern Knight Errant," "Her Adopted Parents," "A Home Melody," "The Legacy," "Auld Robin Gray," "The Telephone," "Nine of Diamonds," "Woman's Love," "The Law and the Man," and "A Dixie Mother," all of which have received the highest praise and endorsement. Its comedies and spectacular pictures have all attracted attention and won for the Vitagraph the position it now enjoys.

William T. Rock, President.

In the management of the Vitagraph Company there is one peculiarity which is noticeably predominant and individual: the general courtesy among its heads and employees. Everybody works in perfect accord and harmony, thus eliminating friction with the least possible resistance. Annually Mr. Rock, the president; Mr. Blackton, the vice-president and secretary, and Mr. Smith, the treasurer, with all the people in their em-

J. Stuart Blackton, Vice-President and Secretary.

Albert E. Smith, Treasurer.

ploy, sit down in banquet together and join in the entertainment and dance which is part of the program. At Christmas time everyone is presented with a large fat turkey and good will and cheer reigns supreme throughout the year. It is like one big happy family and that is one of the secrets of the Vitagraph success.

The illustrations on these pages show the offices of the Vitagraph Company, the original studio, the splendid, modern plant recntly completed by the company, equiped with every facility for producing the highest grade of pictures, and a group of the Vitagraph actors.

Morality and Film Censorship

J. Stuart Blackton, vice-president and secretary of the Vitagraph Company of America, has contributed the following interesting discussion of morality and censorship of moving pictures:

"Having been asked the mooted question, 'When is a film not a film?' or in other words 'Why is the censorship board?' I take considerable pleasure in being permitted to formulate an appreciation of the New York Board of Censors, and at the same time to say a word for the poor downtrodden, much abused and misunderstood manufacturer. There is no doubt that the Censorship Board has been of great benefit and service to the motion picture industry. An exchange manager recently complained to me of the lack of sensational subjects. His actual words were 'They (the public) want red meat and they want it raw.' The fact that the public is now being served cooked viands instead of 'raw' is due to the perspicacity, decency and intelligence of the licensed manufacturers and to the restraining influence of the Board of Censors.

"They realize with us that tragedy and drama, history and mythology, are all impossible in books, on the stage or in motion pictures without an undercurrent of love, hate, jealousy and revenge. Without these impelling motives Balzac and Zola would be dull and uninteresting, Dickens and Thackeray unconvincing, Victorien Sardou and Clyde Fitch unknown, and motion pictures—non-existing.

"During the early years of moving pictures anything that moved would satisfy. Then interest in railroad trains, sea waves and soldiers parading began to lag and it was the introduction of the fundamental principles of life reproduced faithfully and intelligently that revived the public demand for what is now known and dignified by the appropriate term 'The Silent Drama.' A fair-minded investigator of the entire film products of the licensed manufacturers can but admit that there is much to praise and little to criticise in the 'silent drama' of today, and that the Board of Censors is fair-minded no one will deny. In this connection it is a tribute to their good work and to the hearty co-operation of the manufacturers that out of the hundreds of film subjects submitted for censorship so few are even questioned and none are condemned. Slight changes and modification are sometimes suggested, and often actually improve the effect of the story. Several years ago many of the film manufacturers yielded to the public clamor for rampant sensationalism and made hold-ups and shootings galore.

"Now all unnecessary crime is eliminated, and if the plot of the drama requires crime as a cause for a subsequent effect the crime is merely suggested. In our recent production of 'Victims of Fate' it was necessary for a man to be killed in a Western saloon. The exterior of the saloon was pictured with half a dozen Mexicans and cowboys lounging about outside. Suddenly they are seen to duck and scatter in every direction. A wreath of smoke floats out through the open door, a man backs out from the interior, glances furtively about and flees, and the loungers, returning one by one, tell by their expressive gestures and pantomime that a man has been shot. The story is told with all the horror and brutality of a shooting removed. In Chicago, because there is no well regulated, intelligent censorship such as we rejoice in in New York, the police department censors the films. All 'crime' is suppressed—'cut out' bodily. They cut out the killing of Julius Caesar. Ye gods! Imagine a couple of brawny policemen walking on the stage of a New York theater and (not) politely ordering E. H. Sothern to 'cut out the murder part, cull.' And yet no one blames the Chicago police. Good for them, I say. They are doing their duty like good soldiers (or police). It is not the police who are to blame, not the manufacturers who make the films, not the public that (in spite of all said to the contrary) clamors for tragedy; it is the fault of a few narrow-minded bigots who have not grown up with the good old U. S. A. and the good new motion picture industry. When every city has a broad-minded, intelligent board of censors that can see a little further than its nose, when the iconoclast, the agitator, the narrow-gauge fellow is shamed into silence by the splendid serious 'life portrayals' that the licensed manufacturers are producing daily to uphold the dignity and honor of the greatest, most popular and most educational form of amusement in the world, then, and then only, will the 'motion picture,' 'the silent drama,' 'the life portrayal' come into its own."

Motion Pictures in Germany

Moving picture machines have not taken a very great hold on Germany, that is, the American moving pictures. Comparatively few motion pictures of American origin are shown in Hamburg. The German public seems to prefer travel pictures and those having a quieter action to the exciting incidents of American life commonly submitted. The moving picture shows in Hamburg are not managed by Americans.

The usual admission price to the shows of this variety is 1 mark. Tickets are stamped with the hour of arrival, and between series notices are displayed on the canvas that at a certain time tickets have expired and that supplementary tickets can be purchased of the ushers without going outside.

The ushers pass among the audience and see that persons holding expired tickets do not remain for the next performance. The same picture is never repeated in an evening, and the usual length of one admission is about two hours. Small orchestras furnish the music and smoking in the theaters is prohibited in the first-class places.

Fight Pictures on the Mississippi

The promoters of the Jeffries-Johnson fight films, when barred from exhibiting their pictures in the states of Tennessee and Arkansas, attempted to give their show on a barge in mid-stream of the Mississippi, claiming this territory to be outside the jurisdiction of the authorities of either state. Officers interfered and prohibited the performance, however, and the promoters are now planning to appeal to the federal government, asking that it prevent interference on the waters of a navigable stream, according to the constitution.

A Remarkable Essanay Photoplay

BEFORE long there will be released for exhibition in the licensed theaters of the country another of those intensely dramatic photoplays which have made the motion pictures of America in demand the world over. The title will be "His Master's Son."

This drama, enacted by the Essanay eastern company, is a finely produced subject that will appeal to any audience. It is a technically correct story of love and frenzied finance, dealing with the great grain market of Chicago.

her at her home he requests that she read to him the "letter" which has caused his young master such concern, and thus inadvertently acquaints her with her lover's impending ruin. Even while she is explaining the situation to the old man, she is formulating a plan to save her sweetheart, and while the faithful old servant is gathering together his own savings (which, owing to the young man's generosity, are fairly large) she seeks to enlist her father's aid.

The wily old speculator, realizing that the rival has probably overstepped himself in manipulating the

Scene from the Essanay Photoplay "His Master's Son."

Underlying this gripping portrayal of the great battle on the Board of Trade is a deeply touching story of the devotion of an old negro to the son of his former master.

When the young man is caught in the web by the machinations of his rival in love, and is about to give up the hopeless fight, the old Negro, deeply concerned to learn what is causing such worriment to his young master, picks up from the floor the broker's notice that more funds are required to tide him over.

Unable to read, the Negro seeks a confidant who will interpret the writing to him, and finally decides to appeal to the young man's sweetheart. Seeking

market, enters the arena, and, supported by his friends, bulls the price of July wheat, until the young man, instead of facing ruin, finds himself with a handsome profit; the Negro's savings having provided the requisite margin to keep his master from being sold out before the turn of the tide.

The part of the Negro will command attention as one of the finest bits of character work in photoplay, and the financial details of the drama, both in story and in settings, are among the most accurate ever portrayed upon the screen.

This picture should rank with the best ever turned out by the Essanay company.

Edison Photoplays and Players

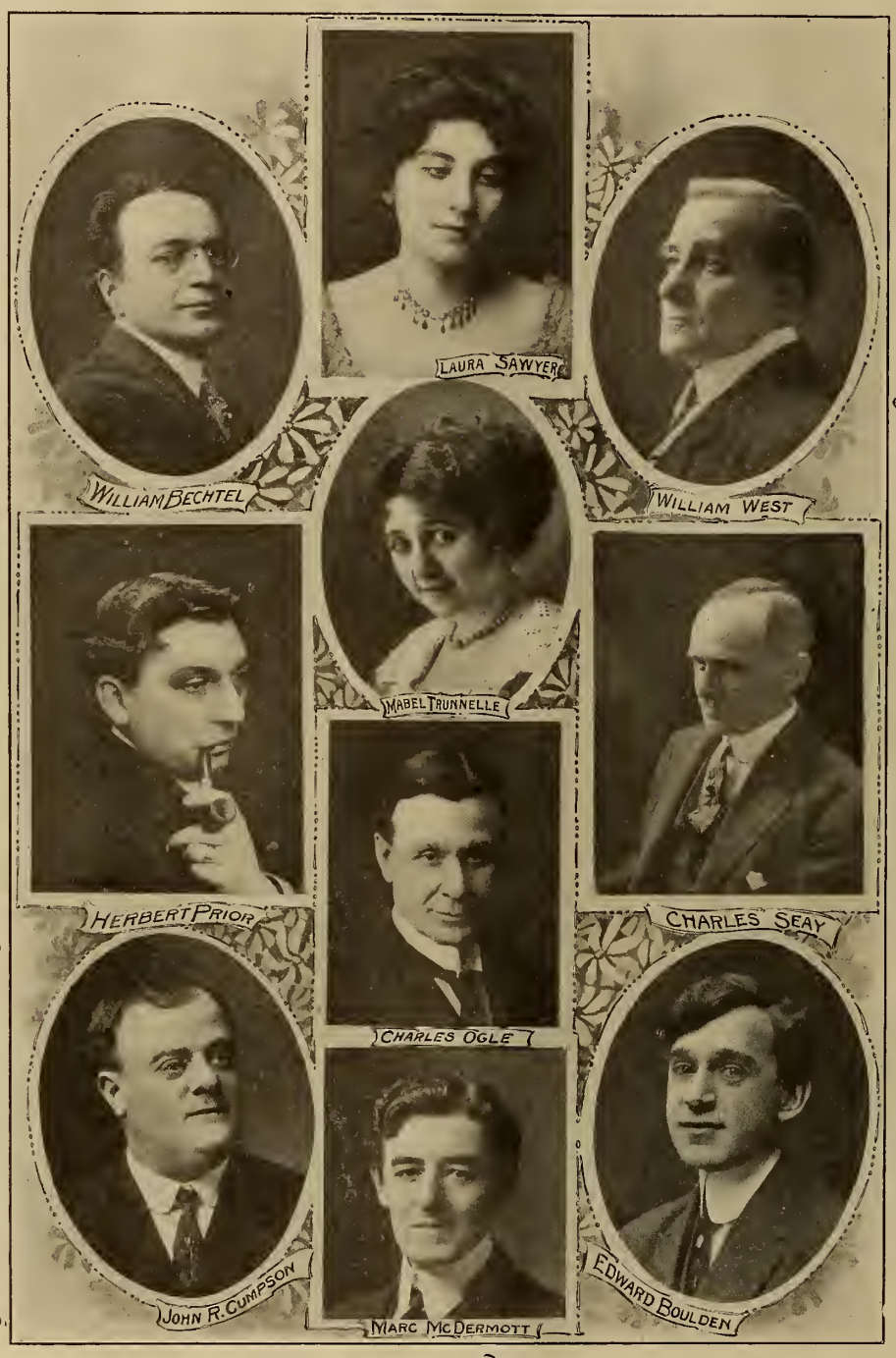

A Group of Edison Players.
Favorite Faces We See on the Screen.

THE Edison studio, located at Bedford Park, New York City, is claimed to be the largest single building devoted to the production of motion pictures in the world. The stage space is approximately 100 feet square, covered with a sloping glass roof and with glass on two sides. It is not an uncommon thing to have four sets of scenes in operation at the same time while two or three are matters of almost daily occurrence. On the other hand the whole studio is sometimes utilized for one large scene which, on account of its size, would hardly be possible otherwise. As examples of such scenes may be mentioned the street scene in "The Prince and the Pauper," the deck of the Bon Homme Richard in "The Stars and Stripes," the convention hall in "Through the Clouds," and the shipwreck in "The Captain's Bride." All of these will be remembered as so convincing in their reality that it seemed hardly possible that they could have been set up and taken in a studio. Indeed, one of the things which has made for recent Edison success has been the convincing character of the scenery. Every attention is paid to detail and expense is not considered when it is a question of having a thing right.

The entire operation of production is carried on in the studio from the inception of the plot of a picture to the approval of a sample positive print. When the picture is thought to be satisfactory in all respects, the negative is sent to the main plant in Orange, New Jersey, where the prints for the orders are made. Of plots or scenarios a great number are received weekly and their consideration involves no small amount of work. There is a special force engaged in handling these plots so that they may be read, returned or accepted promptly and at the same time receive due consideration as to their merits. The Edison Company was a pioneer in enlisting the services of well known authors for film plots and this policy has been followed consistently. The list of names is now quite an imposing one. Beginning with Mark Twain, from whom the company secured the right to produce "The Prince and the Pauper," we find E. W. Townsend, Richard Harding Davis, Roy Norton, Rex Beach, John Luther Long, Ellis Parker Butler, O. Henry, Carolyn Wells and more to come. That the use of plots from such sources has given Edison pictures an originality and attractiveness far beyond the ordinary, is recognized by all.

The studio at present maintains a stock company of actors, ten in number, being composed of Laura Sawyer, Mabel Trunnelle, John R. Cumpson, Marc McDermott, Herbert Prior, Charles Ogle, William West, William Bechtel, Edward Boulden, Charles Seay.

All these are people well-known in the theatrical profession and they are daily becoming better known

on the motion picture screen. With the excellent photography which the company is turning out every individuality of the actor is manifest and the public is remarkably quick in recognizing one of its favorites. Of course, outside the stock company a large number of actors are employed by the day who stand high in theatrical circles and many of these are under an exclusive arrangement with the company.

All the above makes for interest in plot and competent acting but after all the best story and the best acting are nothing unless properly photographed, and it is here, perhaps, that the Edison Company has progressed in the last year at an amazing rate. It is not enough that a scene should be clear and distinct—it must also be artistic, properly lighted and toned, and the film itself must be steady on the screen. Exhibitors have been quick to see the improvements and the company is daily receiving compliments for its superb photography. Its Christmas release, "A Christmas Carol," may, without exaggeration, be called one of the most remarkable pieces of photographic work ever thrown on a screen.

A brief biographical sketch of each of the Edison players who comprise the group illustration, may be of interest.

William Bechtel, a German by birth, was introduced to Edison films through the medium of the Irving Place theater, New York City, where he was engaged as character comedian for three years. He has been associated with and received signal recognition under such stars as John Drew, Kathryn Kidder and Lillian Russell, and was also under the Frohman management for a number of years.

Laura Sawyer, having been associated with Ada Rehan, Otis Skinner and various stock and road companies for a number of years, has stepped into the moion picture field well trained for its more exacting standard of work and easily and quickly became an exceptionally strong factor in Edison productions.

William West has served the dramatic stage for over thirty years, appearing in a hundred different parts, both in stock and road productions. He has the broad reputation of being without a superior among motion picture actors in the art of make-up.

The Edison Studio at Bedford Park, New York, N. Y.

Mabel Trunnelle has an intimate knowledge of the technicalities of the stage secured through several years of stock work in New Orleans, Syracuse and with the Schubert "All Star" cast in Philadelphia.

Charles Ogle has had a varied career. The son of a minister, he was educated for that calling, abandoned it for the stage and later was admitted to the bar, returning after a few years' practice to the theatrical ranks. Since that time—1904—he has played prominent parts in Klaw & Erlanger, Augustus Pitou and Schubert productions, in Rex Beach's "Spoilers," and has also been associated with Chauncey Olcott and Hilda Spong.

Charles M. Seay, a native of the South, is a won-

At Work in the Edison Studio.

derful imitator of the southern negro and the "poor white trash" as well as that American knight of chivalry, the southern "colonel." Mr. Seay has played over two hundred weeks in stock in New York City and five years in vaudeville.

John R. Cumpson's work in the recent "Bumptious" films is fresh in the memory of every exhibitor. Mr. Cumpson began his real stage career in Col. Sinn's Old Montauk cast and later appeared in Frohman productions, as the star of German and Swedish comedies, and later still in Geo. V. Hobart's and Victor Herbert's "Song Birds."

Marc McDermott, an Englishman by birth, has toured the United Kingdom, Australia and this country with such stars as George Rignold, Mrs. Patrick Campbell, Marie Dainton and the late Denis O'Sullivan. He was also associated for a year with Richard Mansfield and later with Joseph Brooks under the Klaw & Erlanger management.

Edward Boulden practically began his professional career from infancy, having come from a theatrical family. At the age of twelve he was given a part in the revival of Rice's "1492" and in more mature years was identified with the Castle Square Opera Company, the "King's Carnival," with Creston Clark, Edward Harrigan and other stars under the Harris and Savage managements. He has also had considerable experience in stock companies.

Herbert Pryor was born in Oxford, England, but a large part of his professional career has been spent

Producing an Interior, Edison Studio.

upon American boards and covers a large field of experience, appearing at various times under such managers as W. A. Brady, Sam Harris, F. C. Whitney and with Olga Nethersole for a number of seasons, while he has had splendid stock experience in Cincinnati, St. Louis and Chicago.

Animated Journalism

To what lengths is the camera going as a factor in modern life? asks the *World's Work*. A Japanese prince is assassinated, and it is found that a complete moving-picture representation of the tragedy has been made. A mayor of New York is shot, and the evening papers publish photographs of the act, taken within a few feet of the assailant and his victim. The psychology of the trained photographer, whose instinctive impulse, when a shot is fired or a magazine explodes, is to press the button of his camera, would be an interesting study, but the fact that the omnipresence of the machine is rapidly creating a complete pictorial mirror of life is more important.

So well are the camera men "covering" the events of the day that they threaten (or shall we say promise?) to drive the reporter out of business. They have in London three daily papers, each of enormous circulation, which contain practically nothing but news-pictures with descriptive captions. They have more:

Pathé Frères, the cinematograph manufacturers, have established a daily service of moving-pictures of the news. The enterprise, which goes by the name of *The Animated Gazette,* is a complete news organization, with an editor, Mr. Steer, who has abandoned the old methods of Fleet Street for the new journalism, and a staff of 5,000 "photo-correspondents" scattered pretty well over the world. The product of this organization is a cinematograph film which is sent out to a circuit of moving-picture theaters, and is already being seen daily and nightly by more than two millions of people. An idea of the circulation possibilities of this kind of a newspaper may be gathered from the fact that New York today has 250 moving-picture shows, that London has 500, that every city and town of Europe and America has from one to a dozen.

There is little doubt that the new idea will soon be at work in America. The editor of *The American Animated Gazette* would sit in his office in New York, scan telegraphed "flashes" of the news of the day, and send out his orders. Where the old-fashioned managing editor would send for a "thousand words Roosevelt," he will wire his photo-correspondent: "Send 500 feet Roosevelt; feature insurgent smile"; or he will order: "Rush 450 feet Aviation Meet; 200 if Post turns handsprings in air." Instead of dispatching his brilliant member of the "sympathy squad" to watch the girl-murderess on the witness stand and, with glowing adjective and picturesque fancy, dilate upon the moral lesson of her career, he will dispatch his moving-picture man, and the machine will do the work of poignant sympathy.

Journalism has never been an altogether restful enterprise; some of us had fondly hoped that it could not grow more "animated." But Mr. Edison has made the world over in many ways.

A. N. Wolff, manager of the Gem theater at River Falls, Wisconsin, publishes the *Village Story Teller* tri-weekly in the interests of his house. Besides the program it carries some good jokes, local news, and a goodly lot of advertising.

First Factory Ever Occupied by Pathé Freres.

One of the Studios at Vincennes.

World-Wide Activities of Pathé Frères

SMALL wonder that Pathé Frères have chosen a rooster for their trade-mark—'tis always sunrise for this great organization. Like the British flag, the Cock is always basking in the morning rays of Old Sol, somewhere in the world. So vast are the activities of the company that probably no one man knows all of just what is going on at any one time and because of its very greatness no one has ever attempted to tell of its varied and interesting labors.

Away up in the land of ice and snow, inside the Arctic circle trudges a man with a couple of companions. An Esquimo musher drives the dog sled packed with provisions and the accoutrements of their trade.

These men, Esquimo and all are in the employ of Pathé Frères. No glory is to be their portion. No honors are to be showered on them for their efforts to win from the frozen north the secret of its mystic grandeur. It's all in the day's work for them, and through the faithful eye of the camera in the hands of these men the world may see the glittering beauty of the cruel land where life is a constant war against the cold.

When Jack London made his famous trip around the world in the "Snark," his 28-foot boat, he found three men in the Solomon islands, sick with the dreaded Solomon Islands fever. Lacking medicine, lacking proper food and proper care, what do you think these men were doing? Giving up in despair? No. They were taking pictures of native life and scenes, and today through the kindness of Mr. London, who beyond doubt saved the lives of these three men, Pathé Frères are enabled to show the millions of moving picture lovers such rare scenes as linger long in the memory of the beholder and which do much to spread the knowledge of our distant neighbors, their ways and customs, among all mankind.

On the steppes of Siberia, in the wilds of Africa, beneath the torrid sun of India, in China, Japan, Thibet, Egypt, South Africa, Australia, South and Central America, and swarming over the countries of Europe are Pathé camera men, scaling mountains, exploring caverns, brooking any danger from man, beast or climate, and all constantly on the alert for anything of interest to the stay-at-homes who travel only with the motion picture screen.

These things are much, but in addition to these, Pathé Frères have an enormous studio at Montreuil-sous-Bois, near Paris, three more at Vincennes, one in Milan, another in Munich, still another at Moscow, and one nearing completion in this country at Jersey City, N. J. They have several factories in France where they make their

Some of the Employees at Joinville-le-Pont.

Corner of Verification Department in the Vincennes Factory.

films, make their tin film boxes, wooden shipping cases, print their own posters and advertising matter, manufacture their projecting machines and cameras. There is another factory at Foots-Cray, near London, and one in Bound Brook, New Jersey. In the Joinville-le-Pont factory alone over 2,000 people are employed, and the amount of positive films turned out of their various establishments in a year would circle the globe at the equator over five and one-half times, being no less than 140,000 miles in length.

The list alone of offices necessary to conduct this great organization is imposing. From the headquarters in Paris its business with the world is conducted through its agencies and branches in Barcelona, Berlin, Bucharest, Budapest, Buenos Ayres, Calcutta, Chicago, Havana, Hong Kong, Kiew, London, Madrid, Mexico City, Milan, Moscow, Melbourne, New York, Odessa, Rio Janeiro, Rostoff, Shanghai, Sydney, Singapore, Stockholm, Warsaw and Vienna.

So much for things material. How was such an enormous business built up and maintained in the few years since motography became a fact? To what are the great successes of Pathé Frères due? First, by enterprise; second, a high ideal, that of making only the best in cinemotography, to which ideal the Pathé company has always been true; third, the loyalty of every man in their employ—Pathé men swear by Pathé—not occasionally but continuously—and fourth, by the rule of a square deal for everyone with whom they do business. The African, the Chinaman, the German, the Jap, the American, the Russian, all are alike treated with honesty and truthfulness in every transaction.

When the motion picture began to be a practical thing Pathé Frères were leaders. They have maintained their leadership for skill in photography, for wealth of detail in their studio productions, for variety of subjects, and for exquisite coloring. They have been the first to make practically every marked advance in the business, and they have been the ones to introduce motion pictures to more than half of the entire world.

Everyone interested in the photoplay of today, exchange man, exhibitor, and spectator, owes a debt of gratitude to Pathé Frères for putting the business on the high plane of excellence which it now enjoys and those who know the personnel and the motives actuating their movements know that in the struggle to a still higher plane, and in the effort for still greater excellence in everything pertaining to moving pictures Pathé Frères will be as it always has been, in the very front rank.

America to Lose Montagu

The many friends of E. H. Montagu will learn with mingled joy and sorrow of the change to take place in that jovial individual's affairs.

On January 7, 1911, Mr. Montagu severs his long connection with Pathé Frères to take a prominent part in the affairs of the Selig Polyscope Company. Montagu broke into the picture game years and years ago. The industry captured him young, away back in 1903, in fact, when he was first connected with the film renting business.

In 1905 he formed connections with Pathé Frères that have continued up to the present time. "Monty" opened up the Chicago office for that concern and proved to be a most excellent film salesman, and still holds some records that others must strive hard to equal.

Always jovial, even tempered, he got along excellently with the Western trade, and now he leaves Pathé to go with a typically western company.

He leaves his former employers with their hearty congratulations and the best wishes of the whole company.

On the announcement that "Monty" is going with Selig, harmless as it may seem, there is a string. You can't see it at first, but the truth of the matter is that he is going to Europe, and then some. In fact, he is to be William N. Selig's personal representative for the eastern hemisphere. Some territory that. Europe is a pretty fair territory, but here you have Asia, Africa, Australia and a few other minor countries thrown in for good measure.

Still, E. H. is a pretty big man, and needs room to grow. All of this doesn't mean that he is going to sell films in that territory. That has been seen to long ago. Just a personal representative in the eastern hemisphere, and that is enough for one man.

Regulating Bill for Kansas City

A substitute ordinance regulating the moving picture shows of Kansas City has recently been drawn up. The ordinance prohibits the exhibition of any pictures that are immoral or suggestive. All pictures must meet with the approval of the secretary of the board of public welfare and receive a permit from him.

Another section provides that no child under 14 years of age shall be permitted to work, act or perform in any of these places. The enforcement of this probably will do away with the present "amateur night." The penalty for violating the ordinance is a fine of not less than $10 nor more than $500 for each offense.

The ordinance has yet to be considered by a special upper house council committee—Aldermen Oppenstein and Frame. It was said yesterday that it may be made stronger by prohibiting the exhibition of pictures showing crime scenes.

Motion Pictures for Hop Field Laborers

F. A. Proulx and William Neuert, of South Bend, Washington, have been induced to put up a moving picture show in a large hop field near Littell, which is owned by Herman Klaber. Mr. Klaber thinks it will be a paying proposition, as there will be about 1,000 hop pickers employed, and he also thinks that it will help him to keep his employes from becoming restless. He believes what a prominent millman said recently, that it is hard to get an American laborer more than a mile away from a moving picture show.

School Board Asked to Give Pictures

The board of education of Berkeley, Cal., has been asked to join the circuit of moving picture shows, which will be devoted solely for the education of children. It is planned to have the theaters under the charge of the school boards and only films instructive to the children will be exhibited. It was the consensus of opinion of the board that some arrangement could be made with the local moving picture men, for the display of motion pictures which will be educational.

American Film Company Personalities

IN these pages it is our privilege to present the portraits and something of the personal history of those who are guiding the destinies of the American Film Manufacturing Company. That the young company has already achieved distinction in the independent ranks is due entirely to the experience, ability and untiring zeal of these workers.

Samuel S. Hutchinson.

Samuel S. Hutchinson, president of the company, is known as an exceptionally capable and shrewd film man. He has been identified with the motion picture industry virtually since its inception. For two years he was president and general manager of the Theater Film Service Company of Chicago and San Francisco. He is now, and has been for over a year, president of the H. & H. Film Service, until recently a licensed exchange.

Upon the incorporation of the General Film Company, Mr. Hutchinson sold out his interests in the Theater Film Service. He retained his controlling interests in and took active charge of the H. & H. Film Exchange, which he subsequently took over to the independent side.

Mr. Hutchinson's advent in the independent field was hailed as an acquisition. His knowledge of the film business, his appreciation of the wants and necessities of the exhibitors, and his personal knowledge, obtained directly from the exhibitors, as to what they require, have proven one of the greatest assets of the American Film Manufacturing Company.

Aubrey M. Kennedy.

Aubrey M. Kennedy, general manager of the company for three years, occupied the unique position of successfully managing both a film exchange and an established manufacturing concern. In the central states his name is a by-word for progressiveness and energetic accomplishment. The invaluable experience of Mr. Kennedy, insofar as the technical end of the American Company is concerned, is a guarantee of success. His personal acquaintance with numberless exhibitors assures exhibitors film of a caliber such as will unquestionably meet with the approval of the majority of moving picture patrons. His aggressive spirit coupled with his well-known business ability, are an assurance of success.

Gilbert P. Hamilton, manager of production, is exceptionally fitted for the responsible position occupied by him in this new manufacturing concern.

His experience in the making and handling of moving pictures dates back fifteen years. At that time he was employed in the projecting room of the Eidoloscope Company situated in lower Broadway near Whitehall street, New York. Mr. Hamilton remained in the employ of the Eidoloscope Company two years. He then transferred his allegiance to the Biograph Company and remained with that firm for five years. Desiring to settle further west, Mr. Hamilton came to Chicago and entered the employ of George K. Spoor, who was at that time just establishing his Kinodrome service. For five years Mr. Hamilton devoted his entire time and attention to the development of the Kinodrome.

Gilbert P. Hamilton.

The first plant of the Essanay Film Manufacturing Company was established under Mr. Hamilton's supervision, and since that time Mr. Hamilton, in the capacity of superintendent of factory and studio, has attained results that speak for themselves through the medium of the Essanay pictures.

Mr. Hamilton, skilled in the knowledge of men, and quick to judge of their abilities, seldom makes a mistake in judgment. His connection with the American Film Manufacturing Company augers well for good pictures.

Frank Beal.

Miss Adriene Kroell, the leading lady of the American Company, is unquestionably destined to reach heights as yet unattained by many various favorites at present seen in motion picture theaters. Miss Kroell's beauty is well attested by the fact that in 1907 she won the International Beauty Contest of the St. Louis *Republic*. In her theatrical career she has supported such stars as Virginia Harned, Amelia Bingham, Henrietta Crossman, Wilton Lackaye, James K. Hackett, Marguerite Clarke, and Jules Herne. Miss Kroell is a remarkably clever actress and versatile.

"That handsome lead" is the term commonly applied to Mr. Warren Kerrigan. He has occupied leading roles since the early part of last year. He is likewise commonly termed the "Gibson man" as an appreciation of his good looks, which are of the true southern aristocratic type.

Mr. Kerrigan has appeared in many films of note since his connection with motion picture work, and is undoubtedly an acquisition to the American Company. He has gathered quite a following of admirers among the moving picture theater audiences, and his splendid work is so well known to the average moving picture patron that nothing we can say will enhance the impression that he has already made in the moving picture field with his handsome appearance and clever and versatile acting.

Miss Adriene Kroell.

Frank Beal, producer, is a man of great experience in his line and had already attained success when he joined the American Company. His work speaks for itself and for him and needs no extended comment.

A rather remarkable innovation introduced by the American Company in connection with the release of its first films was an offer of $200 in prizes to exhibitors, operators and patrons of motion pictures.

The company offers a first prize of $75, and five prizes of $25 each to all who are likely to see some of the American films. The only requirements for the contest are that the contestant write a letter addressed to the contest editor of the American Film Manufacturing Company, informing the company in a general way as to exactly what his opinion is of the first four releases of American film. The letter is not to exceed 200 words in length.

Warren Kerrigan.

This offer ought to prove very interesting in its results. Exhibitors, operators and the public are often severe critics and they notice faults that are not observed by the manufacturer. Thus, the company hopes to get some ideas of film structure which might not occur in its organization. The company has added to its offer an advertising value to the exhibitor. This was done by supplying each exhibitor of American films with a couple of posters suitable for display in front of the house and calling the patron's attention to the contest and prize offer.

The contest closes January 20 and the trade awaits with interest the publication of such letters as meet the approval of the company's board of judges.

Sunday in Syracuse

The common council of Syracuse, N. Y., has rejected the proposition from the Syracuse Ministerial Association for an advisory commission to guide the Commissioner of Public Safety in determining whether Sunday entertainments at the theaters and moving picture shows are legal or proper; also that for limiting the time of a theater license to the last six days of the week. There were but six aldermen for the resolution and ordinance submitted by the ministers, the other thirteen members voting in the negative.

The majority did, however, decide to keep the theaters dark between the hours of 6 and 8 p. m. on Sundays. This was agreed upon at a conference of Democrats and Republicans which lasted about two hours. It was offered as a sort of concession to the Ministerial Association in answer to the argument that the moving picture shows attracted people who would otherwise attend the early Sunday evening services in the churches.

International Photographic Exhibition in Moscow

United States Consul-General John H. Snodgrass says, with reference to previous reports on the International Photographic Exhibition to be held at Moscow next spring, it has been definitely decided to open the exhibition March 14 and continue the same to May 7, 1911. Applications for admittance must be handed in not later than December 1 to the exhibition committee, Russian Photographic Society, Moscow. The reception of exhibits will continue from January 28 to March 14, 1911.

The manager of the American and English department, Mr. P. Betton Done, is anxious to get into correspondence with all American manufacturers of photographic supplies, as well as allied trades and publishers of photographic journals. The addresses of the various photographic societies are also requested.

Poor Children Treated to Pictures

Equipped with a roll of choice films, Messrs. Kidd & Coggins, moving-picture purveyors of 1107 North Monroe street, Baltimore, went out to the Baltimore Fresh Air Farm recently, put up their screen against the porch on the back of the main building, got their picture machine in position, and, when it was plenty dark enough there began for those youngsters one of the most marvelous shows their eyes had ever beheld. For almost two hours this juvenile audience of some 300 spell-bound "kids" held their places on the slope of lawn, so thoughtfully put there for the purpose by Dame Nature years and years ago in anticipation of just such an occasion, and with many "ohs!" and "ahs!" and loud clapping of hands gave evidence of what a delightful entertainment it was for them.

Praises Picture Shows

"I cannot understand the attacks that are continually made on the motion picture theaters," said the Rev. H. H. Jacobs, before the Drama league in the club room of the Hotel Pfister at Milwaukee.

"The moving picture houses present better shows than the high priced theaters, for 50 per cent of the shows of the big houses reduced to pictures would never pass the board of censors. The moving picture shows have cleaned out the 'gallery gods' of the high priced houses."

Recent Films Reviewed

In The Wilderness.—Selig. One of those "early settler" subjects which Selig does so well, and of which Selig seems to have a private monopoly. Nobody else tries them, yet they are of large value and effectiveness. The beauty of them is that they offer valid excuse for conflict and turmoil—conflict with nature and with Indians. This one, like its predecessors, suggests with fine effect the communal and co-operative spirit of those early times, the plot concerning itself not with a few isolated souls, but with a whole community This provides a bigness and breadth, a canvas of epical proportions, that is rare to photoplay subjects. The action is stirring from first to last, and the scenery beautiful. Incidentally it must be mentioned that this film shows the cleverest Indian get-away seen in many moons. The white maiden is captured and bound to a tree and the Indians go to sleep around her as usual; but whist! her lover is in the branches above, he hangs down and cuts her bonds, then lowers a rope and pulls her up beside him in the branches. When the Indians awake, they find the bird has flown, leaving not a trace behind. Thus, has one of the stalest and most over-worked, also one of the most unconvincing, situations in the whole photoplay category been freshened up and rendered plausible. For this, Selig, we call down blessings upon your head.

The Captain's Bride.—Edison. In a film that is notable for its fine acting, stands out above all the rest the performance of the leading actress. As the pathetic little lady who lost her memory in the sea and finds herself keeping house for an isolated crew of life-savers, she presented a wistful and charming figure. It was a grateful rôle, that winsome bit of femininity cast down among a group of rough, good-natured man-creatures and the actress took advantage of every point. In the first place she was endowed by nature with just the right characteristics for the part, and secondly, she brought skill and intelligence to the portrayal of it. Memory recalls many good performances of hers in the past, but none so good as this. The play is of deep interest throughout, and seems to be an excellent adaptation of John Luther Long's story—a story by no means easy to stage: the shipwreck presenting difficulies of almos prohibitive magnitude. These difficulties have been triumphantly surmounted, and the result is a scene of astonishing realism. The captain, sitting on a rock and gazing out to sea (with his back to the camera, just as it should be), affords an impressive and artistic epilog.

In Her Father's Absence.—Pathé. We imagine the original title of this piece was "In Her *Husband's* Absence," and that it suffered a "sea change" on its trip across the water; if so, the French version had considerably more point, being more logical and also naughtier. Even in its expurgated clothes it is quite funny, being a typical French comedy consisting of slap-stick situations based on a ground-work of wit.

The Police Force of New York City.—Edison. Instructive and valuable is this film. It will serve to raise the policeman's profession in the eyes of the multitude, and bring honor upon an organization that deserves praise, but seldom gets it.

The Closed Gate.—Gaumont. The first scene, showing a long procession of soldiers garbed with all the accountrements of war led us to expect a military drama, but such was not the case; the picture was just thrown in for good measure, and being a fine one, let us express our gratitude and pass on to the real subject. This proves to be a thoroughly domestic drama, an interesting and profitable episode from family life, presented with all the Gaumont perfection of detail. The pictures alone, with their superb photography, would hold attention without any aid from the drama. The acting also has an easy perfection, a finished facility, that gives "class" to the performance. There is a scene of tempestuous grief, self-reproach and recrimination, between two child-bereft parents, that is enacted with masterly skill. Some of the good effect is destroyed, however, by the next scene, where the mother recovers her supposedly dead child with an equanimity that is astonishing in view of what had gone before. The final picture, with the little tot closing the gate on the would-be lover, is a neat bit of action, unmistakably symbolizing the moral of the tale. As a minor criticism, let it be noted that the sub-titles need editing. The one that reads "Bah—she likes me too much!" brought laughter from the audience, and spoiled the following scene which was not intended to be humorous. Another one reads "And the maiden shut the gate," said "maiden" being about 3½ years old. It is not the custom in this country to apply that term to a girl-child who has not yet graduated from babyhood.

Little Snowdrop.—Pathe. A Grimm's fairy tale, handsomely colored and handsomely mounted, and fairly well acted. The outdoor scenes have been well chosen to keep within the half fantastic and half medieval atmosphere of the tale, and the interiors have a convincing appearance, being reminiscent of illustrated editions of the book . At the end the wicked queen took one of the most awkward and ludicrous falls that it has ever been this reviewer's lot to witness, but that is only a slight blot on an otherwise charming film.

The Girls He Left Behind Him.—Thanhouser. A pretty idea, but not worked up very successfully. Assuming that the various scenes were only memory pictures, they were entirely too distinct. There should have been an effort to throw a reminiscent haze around them—dissolving views, or something, to suggest revery and visions. This would have required more care and finer workmanship, but that is not too much to expect from Thanhouser.

John Dough and the Cherub.—Selig. A phantasmagoria of up-to-date, fairy-tale effects, not very comprehensible, except perhaps to readers of the Baum book, but enjoyable anyhow. In other words there is not much logic or reason in things, but that is a small matter, since the success of the piece depends entirely on its spectacularity and extravaganza. We see an amount of stage carpentry and fantastic costuming seldom encountered in motion picture productions, and it all must have involved a great deal of time, trouble, and expense. It provides good entertainment for the holiday season and will delight especially the children.

The Joke They Played on Bumptious.—Edison. Mental suggestion is here drawn upon to furnish the basis of a comedy, and the result proves interesting as well as funny. Most practical jokers ought to be hung, but these are gentleman jokers, operating on a plane of intellectual refinement, and thereby win a dispensation. Bumptious is the victim, and he is a very complete one too, until he gets wise and turns the tables with great effect. Bumptious never created more high-class and legitimate fun than in this film. The acting of everybody is excellent, and all the elements of a rather intangible complication are presented in such a manner as to be perfectly clear.

Overland to Fremont.—Selig. There is not a great deal of originality to this plot, capture and escape from Indians being a well-worn theme, but it is all done in a spirited manner, with some novel variations, and stirs fresh interest. The three main actors, one of whom appeared to be a real Indian girl, put up a good appearance in their respective rôles and win our sympathy with their personable qualities, especially the guide, who made a fine figure of a man, one about whom we could easily credit such exploits. What we like above all is the fact that he did not fall in love with the girl, nor she with him, though they had sufficient opportunity and excuse. This shows commendable restraint on the part of the producer, resisting the temptation to compass a cheap popular effect. Too bad their hazardous journey terminated in nothing more agreeable than a death-bed, however. The girl went through peril to achieve sorrow. But she may have drawn some consolation from the very beautiful scenery through which she passed. The background of one picture is formed by nothing less than Mt. Shasta in all its grandeur and magnificence, with photography no less superb, and other scenes possess uncommon beauty. The production is a painstaking one and deserves high praise.

The Poor Student.—Imp. How nice it would be for all of us if, when a girl peevishly rejected our gift of a flower simply because we were a waiter, we could go out West, strike gold to the value of $100,000, return home in our auto and spite the haughty damsel by marrying her best friend! That is just the

way things ought to happen, and we must thank the photoplay producers for so frequently giving us a glimpse into that ideal world. But the trouble with the ideal world is that it isn't real, and neither are such photoplays. They pass on the screen like a mirage and touch no responsive chords of verity or conviction.

The Lesson.—Biograph. The lesson is a strong one and ought to have a powerful effect wherever shown. The moral is not "Honor thy father and mother," etc., as the Biograph company would have us believe, but "Avoid drink." It wasn't the son's disobedience alone that wrought his downfall, it was the particular form of his disobedience. The father abjured him to become a minister, and instead he took to drink. The results were dire and tragic. If he had become an actor, or an atheist, or a commercial traveler, his course would have been equally disobedient, but not, we trust, so disastrous. The piece is a powerful and shocking argument against the whisky habit, with filial disobedience as one of the steps in the drinker's progress; yet the Biograph company has seen fit to emphasize, by means of a sub-title, the filial disobedience element, as if therein lay the whole moral of the tale. This is just a logical mistake on the part of the editor and has no effect on the drama, which proceeds to show with a logic all its own that drink is the root of the evil. It is by no means a pleasant drama, indeed it is quite horrible, but the truth and dramatic force of it render it acceptable. Once in a while we can stand a cauterizing sermon like this, but not too often. The film is a great success, but we hope Biograph will not be tempted to repeat it very soon.

The Dead Letter.—Lubin. A pleasantly improbable drama worked out with a good show of plausibility. The two main characters are enacted by players of engaging personality and win our sympathy. The skill with which they "made up" their faces and figures to indicate the passage of years was noteworthy. One would swear that the hand of Father Time had done it. The production is adequate, but deserves no special praise. The old South is suggested, but that is about all.

Hunting Sea Lions.—Pathé. The Pathé company is doing a good work with its hunting pictures, for they show the world how much cruelty and dumb suffering is involved in the capture of those pelts and feathers which civilized people wear with so much vanity and self-complacence. Hunting is slaughtering, and the hunter is the slaughterer, one who makes pleasure or profit out of slaughter. It is just as well that this fact should be realized, and the Pathé hunting subjects make it perfectly clear. The pictures seem a little dark, which lends them a certain effectiveness, in that they thereby harmonize with the sad and gloomy nature of the subject.

Get Rich Quick.—Pathé. Here we have the secret passage and the sliding door brought up to date and made an adjunct of the business office. Probably that is the French manner of conducting high finance. The mechanical features are very well handled, but it all seems a trifle absurd. The play is a melodramatic morsel, and the actors grip it between their teeth and shake the very life out of it.

The Romance of Hefty Burke.—Edison. An interesting drama with a plot of considerable originality, and with characters well conceived and executed. The latter have been chosen from a rank of society seldom dealt with in motion pictures, the really lower classes of a city population, who are poor but by no means down-hearted. It is a virile poverty, far removed from that suffering, languishing kind which the photoplay usually portrays. In fact the poor people who appear in photoplays are generally "society" folks, scions of aristocracy, who have fallen from their high estate. This glimpse at the real thing has the effect of novelty and is refreshing. The actors look their parts—to say which is, of course, no slur, but a tribute to their art—and handle matters with a breezy naturalness.

Recreation of an Heiress.—Biograph. This subject, having some really solid qualities as a sarcastic comment on fortune hunters, could have been treated with more truth and restraint, and the effect would have been more telling. As it stands, broad farce has usurped the place of polished and pointed comedy. The result is merely comical whereas it might have been amusing, in that higher sense described as "rich." In fact the acting of the mother and son was too excessive and extravagant to go down. It lacked even the plausibility of farce. The heiress was far better, maintaining an air of daintiness and dignity. The maid was somewhat clownish, but this was excusable, especially in view of the fact that it brought the laughs.

A Family of Vegetarians.—Edison. Here's a film that appeals to head, heart and stomach. To the head, because it affords an amusing commentary on a contemporary fad; to the heart, because a love affair is involved; and to the stomach, because it shows so many good things to eat. The latter organ simply leaps with enthusiastic appreciation. The sides shake too, with laughter. Truly an affecting and profoundly moving piece.

White Roses.—Biograph. Some comical nonsense, played in a spirit of lively farce, with amusing result. The bashful suitor's proposal to the slatternly cook was almost too great a stretch on plausibility, but then it is all impossible, intentionally so.

Clancy.—Vitagraph. Policeman Clancy is the most admirable kind of a hero in that his heroism is performed in connection with the daily round of work, having no other incentive but that of simple duty. The heroes who arise on special occasions and perform some courageous feat under the pressure of excitement and emotional stress, are admirable enough; but let us give the choicer laurels to heroes of the Clancy type, who take their risks with cool determination, acting under no spur but conscience, and without hope of praise or material reward. A film that impresses facts like this upon us is decidedly worth while. It acquaints the public with the essential nobility of the policeman's calling and thereby helps to bring honor where honor is due. The actor cast for Clancy's role looks the part to perfection and plays it in a quiet resourceful way that gives the impression of thorough competence—just like Clancy himself. The "gas house" gang act energetically and with a collective inspiration, affording a vivid portrayal of the rowdy element of a great city. The photography is at all times smooth and clear. There is just one flaw in this otherwise excellent photoplay. That is the final picture showing Clancy's recovery. There is no objection to a happy ending, in fact it is to be urged, but the pantomime of the previous scene had indicated unmistakably that Clancy was brought home dead. The two scenes are contradictory, and one or the other should have been altered.

Her First Husband's Return.—Pathé. And then what happened? The play closes on an apparent solution of the double wife's marital tangle, but matters could remain in that state not longer than twenty-four hours, only until the first husband should explain the situation at police headquarters. It isn't likely that he would submit to a burglary charge without explaining. The wife's desperate solution would thus ultimately prove a boomerang, resulting in publicity and exposure, the very thing she was trying to avoid. But fortunately while the drama is in progress these skeptical misgivings do not arise, and the last scene has a fine plausibility. The situation is highly dramatic, and the actors have made the most of it. Mention must be accorded to the library setting which is of unusual substantiality and richness. A similar story appeared in a photoplay two or three years ago, but in that version the wife took advantage of her position to shoot the intrusive first husband, thus effectually silencing him forever.

Pigs Is Pigs.—Edison. Here the laughs come loud and free over the rich humor and human nature of the situation. Bumptious is a trifle too voluble and volcanic to fill the shoes of Morehouse, but his acting scores well none the less. To present this humorous classic was a happy inspiration. Some of the spirit of it inevitably got lost under adaptation, particularly that dry, sly, personal flavor that made the original so rich, but there is enough left to make an exceptionally good comedy.

The County Fair.—Selig. Knowing the stage version of the "County Fair" only by fame and not by acquaintance, we cannot say whether this is a good adaptation or not; but we doubt it, because it seems improbable that a drama comprising so many broad caricatures of human nature could have achieved the permanent popularity enjoyed by Neil Burgess' play. We suspect that the people who appear here as pure caricatures were in the original version only one part idiosyncracy to ten parts human nature. In the adaptation the human nature has been all but lost, and the result is a queer thing that might be described as "melofarce." Not that it is not effective in its own way, being provocative of interest and much laughter, but we believe it does

scant justice to the original. There are some points, however, by virtue of which the present version must be a great improvement on the original; these are the stock exhibit and the horse race scene, which could never of course have been presented on the stage with so much reality. The horse race pictures are masterly and leave one wondering how they were accomplished.

A Tale of the Sea.—Selig. The sea and shoreline settings, and a story strong and simple, give this film distinction and beauty. There are qualities of reality and truth to the facts of life and human nature that form the strongest asset that any drama may possess. Nothing has a more powerful and stirring effect than truth, and the simpler the better. The photoplay producers are seldom content to be simple until confronted by the sea, and when enlisting the services of that mighty actor they realize that no theatricalism and conventional intrigue is needed. Consequently some of the very finest and most impressive photoplays ever produced have been sea pieces. Their simplicity gives them an elemental and universal appeal; they raise big thoughts and stir deep emotions. Let us have more of them.

The Golden Supper.—Biograph. One of those costume affairs where the drama plays second fiddle to a costly production. Many beautiful pictures are presented to view, but they gain little from being in motion. In other words, the action, the drama, is negligible if not intrusive. The actors with their prosaic manners and modern faces do little but spoil the old-world illusion. You can put fourteenth century costumes on these people but you cannot give them the proper faces or the proper manners. Every time one looks at them one's ideal notion of court life in the middle ages gets a jar. This is no particular reproach against the actors who, being born in this day and age, can scarcely be expected to look and act like those people of the Renaissance period who have been celebrated in song and story, thereby becoming an ideal which few everyday mortals can hope to impersonate. Nevertheless Renaissance pictures demand Renaissance people, and if the actors fail to suggest the same, the pictures fall just that far short of perfection. All the material details are very fine, but they alone will not visualize a poem.

A Dixie Mother.—Vitagraph. Tense acting and fine settings give this subject unusual impressiveness. The plot is rather incoherent, coming in episodes, any one of which commands sympathy and interest, but the relation between them is not very close. It may be for this reason that the mother's insanity seems to come abruptly, giving a painful and, on the whole, unpleasant impression, though this feeling is mitigated by admiration for the deft and poignant manner in which the actress handled the episode. Her characterization was strong throughout, suggesting in the early scenes a fixedness of idea and tensity of feeling that culminated quite logically in insanity. The acting is all good, and the photography smooth and clear. The old southern interior creates a fine illusion, suggesting spaciousness and substantiality.

A Christmas Carol.—Edison. Here we have a classic presented just about as it should be. The production is accurate and worthy on the material side, but above all the spirit of the original has been caught. The photoplay form retains those intangible qualities which make the original a thing of perfection and delight. Scrooge becomes a very real figure to us and we follow his change of heart with a thorough understanding, and the Christmas spirit seems to enter our souls coincidently with its entrance into his. Certainly we accompany him on his round of beneficence with the purest delight, tingling with altruism. The part of Scrooge is taken by an actor of manifest skill and intelligence who delivers the character with a fine sense for values and varieties of emotion. The minor roles are also well handled and pleasingly visualized. The visions and dissolving figures create an astonishing semblance of the supernatural and pay high tribute to the photographer. It must be mentioned that the material aspect of the Spirit of Christmas was not very well conceived, looking too much like a Sunday school Santa Claus. This was the only noticeable flaw on the entire production.

His Sister-in-Law.—Biograph. This is a queer piece, so far out of the ordinary run, as regards plot, that one does not know whether to like it or not. The plot is certainly unusual, and, we repeat, queer. It is a case of the old marital triangle, only the disturbing element is a child. The husband seems to be jealous of his wife's little sister. The principle character is a child, yet it is not a child's story; nor is it a child's story for grown-ups, as we are used to having them. The child concerned is treated as a grown-up, and given grown-up characteristics. The piece might be described as a grown-up child's story for grown-ups. The acting is quite good, in the approved Biograph style, and there is an excellent bit of character work in the part of the maiden aunt. We have seen that type many times in life. She has a timid nature but a strong conscience, and probably would belong to the W. C. T. U.

The Tyrant of Florence.—Eclipse. Anyone seeing this film would be glad he wasn't living in those medieval times. Life seems to have been secure neither to prince nor peasant. Cruelty and revenge were the order of the day. Emotions were primitive and violent. If this film tells the truth that was really a very bad time. But knowing Eclipse's proclivities to garb melodrama in the guise of history, we discount fifty per cent of it, and take the rest on trust. It is a beautiful production, creating an illusion of the distant and antique. The heroine makes a lovely picture to feast the eyes upon. The costumes of that day were very beautiful when worn with such grace and distinction.

Chamois Hunt.—Eclipse. It was no easy matter to photograph the shy and elusive chamois running in its native wilds, and we admire the prowess of the man who "snapped" them with a camera more than the man who shot them with a gun. The slaughter really is depressing. But there was some magnificent mountain scenery to relieve the sadness of it. A difficult subject handled with completeness.

The Rustler.—Selig. The pictures showing the horse round-up are magnificent in their sweep and largeness of motion. How much finer this is than a narrow room with painted settings and Jack making love to Gladys on the sofa! It is this element of the big out-of-doors with its sweep and freedom, that makes western subjects so attractive to the city shut-ins. Melodrama has no thrill to compare with the thrill of big old nature. These "rustling" scenes create a splendid impression. The drama is little more than an excuse to introduce them, but is entirely adequate to the purpose. An amusing inconsistency crept into one episode which was supposed to happen in moonlight with the picture tinted blue, but lo! there were chickens walking about the yard. Maybe chickens do go out nights in the west—anything can happen there—but it doesn't look quite proper. The rooster wasn't on to his job, or else the producer wasn't.

Justinian and Theodora.—Selig. An expensive production disclosing some fine scenic effects. The scenery is more impressive than the drama, which is a rattlety-bang affair with a none too comprehensible plot. One would have to know Roman history in order to fully comprehend it, and knowing Roman history one would probably raise critical eyebrows, for the piece is history only as viewed through the colored lenses of melodrama. The production is of more worth for its instructive than for its dramatic features, as the lavish and apparently accurate mountings give a vivid glimpse at Roman times and customs. There is some doubt, however, about the accuracy of the scene in the "gothic capital." It seems improbable that there would be found in a camp of barbarians a garden of such elegant appointments. The scene is beautiful but of doubtful accuracy. There are many beautiful scenes, of which the last one with its great depth and artistic grouping and religious suggestion, is easily the climax.

Girls Will Be Boys.—Essanay. Considerable originality is manifested in this photoplay which is farcical in manner, but comedic in matter, in that it affords an amusing commentary on life as it is, or might be. We have seen girls dressed up as boys before, in fact it is quite a common stage expedient, but they usually do it as a matter of disguise, and not, as here, as a matter of principal. These swaggering damsels are proud of their men's togs, and seem to be quite at home in them, but presently some real male creatures appear on the premises, and our modern Amazons meet their Waterloo, succumbing to the darts of Cupid. The siege is a merry one and the final surrender proves a victory for all concerned. The acting is spirited and characterized by an unusual amount of byplay, showing that the episodes were carefully worked out. Probably a good scenario lay behind. Some moral precisionist will doubtless take exception to the swaggering and perverse femininity displayed by these girls, but it all seems harmless enough and makes good fun.

Of Interest to the Trade

By L. F. Cook

New York Letter

What to write—that is the question before your correspondent. What to write. Much advice has been sought from various quarters. Advice from men in the trade, advice from laymen, and advice from actors, to which the answer always was, "Why, I don't know. Write the news, of course!"

But, in the humble estimation of your New York correspondent, that is not enough. Now ordinarily in any other line of publishing the correspondent is supposed to give only the news. But in the moving picture field it is entirely different. The writer in the moving picture field must be able to give advice to the manufacturer of films, to the producer, to the actor, to the salesman, to exchanges and to exhibitors. He must be able to tell the machine manufacturer how to make his machine, he must be able to tell the operator how best to show his pictures. He must advise the cashier of the theater, he must admonish the ticket taker. He must see that the usher has carefully brushed his clothes, and shined his shoes, and he must even tell the scrub lady how to mix her soap and water. We all know that the writer for a moving picture paper must not simply make a record. He must take the trade by the hand, and lead them forward to eternal glory. But what to write.

Whether to make this column ponderous and heavy, to quote French and Latin with abandon, and to show intimate acquaintance with the great authors, or whether to make it delicately humorous, or uproariously funny, that is the question which must be decided. All of this may be a waste of good space to the reader, and seem foolish to him, but the stage fright of the New York correspondent is terribly real to him. But these questions must be decided later and then poor Hack must get down to business, or the assignment will be completely taken away from him.

Before getting down to business, however, we would like to say that if any reader has any ideas how this column ought eventually to be conducted, we would be most everlastingly grateful to him if he would take the trouble to send them to us.

Probably the most interesting bit of news among the manufacturers is the elevation of J. E. Brulatour to the office of the president of the Sales Company. Mr. Brulatour brings to that office an unusual ability, and his unique position in the trade will enable him to decide the delicate questions which will undoubtedly come to him for decision, with the greatest amount of fairness. The trade looks upon his selection as president of the Sales Company as an exceptionally unique circumstance. There is no question but that he carries with him the good will of the trade as a whole.

Among the film manufacturers we will mention the return of R. Prieur, who returned from a long trip to Europe. Mr. Prieur returned on the Mauritania, taking part in one-half of her attempt to make a record round trip. Carl Laemmle has come to New York to stay, realizing that if he did not take this step he would soon feel more at home on the Twentieth Century Limited than he did in his own house. John Rock, who represents the Vitagraph Company in the central states and Chicago, comes to New York to spend Christmas with his Pa, and David Horsley got back from Washington in time to hang up his stocking for Santa Claus.

A most meritorious advance film exhibition is Pathé's "Il Trovatore." The acting in this film is most excellent, the coloring is superb and the reel is indeed entitled to be called a film d'art. Under the direction of E. H. Montagu, who is himself a great lover of music, the music for this opera has been rearranged and cut down, so as to correspond with the film. The wording of the subtitles in the film has been inserted in the proper places as music cues, and if this music is used with the film, it will make "Il Trovatore" one of the milestones in the progress of the film industry.

An interesting announcement to the exhibitors of New York and vicinity is the consolidation of the Exhibitors Film Exchange and the Hudson Film Exchange. These two film exchanges will be consolidated under the title of Hudson Film Exchange, and the development of this exchange will be watched with a good deal of interest.

Another bit of information is the fact that Mr. Bernstein, former manager of the Paramount, has assumed a position with the Steiner Film Exchange. This change took place December 12.

One of the most notable new theaters is the Prospect, at Westchester and One Hundred and Sixtieth street, the Bronx. This theater is thoroughly modern in every way, and is entirely fireproof. The decorations are extremely pleasing to the eye, the furnishings are luxurious, the seats are comfortable and commodious. In fact, the atmosphere of the whole house, as well as the appearance of operating staff, carries to the patrons a conviction of sincerity and stability that prove that motography is here to stay. The rapid growth of the film industry and the invasion of the photoplay house in the neighborhood district is a condition which, strange as it may seem, the daily newspapers of New York either cannot or will not see. Just why this is so, nobody seems to know. The film industry is rather inclined to attribute this feature to the commercial end of the New York daily press, but it would hardly seem that men with the brains and capability necessary to run this same New York daily press, would be so short-sighted as to ignore absolutely the wonderful growth of an industry which means so much to the citizens of New York. But nevertheless they do. One is constantly running across knocks against the picture houses, and even so eminent a paper as the *Sun* stoops to have its little knock in an editorial entitled, "The Passing of the Film." We, however, are inclined to think the passing of the *Sun* will come before the passing of the film, and we still live in hope that we shall see the day when some exceptionally bright New York editor will stoop to pat this industry upon its back. The only trouble with that, however, will be that the editor will probably claim that he first discovered the moving picture.

William Gane, manager of the Manhattan theater, 31st and Broadway, showed managerial enterprise last week that is seldom equalled in the moving picture business on this side of the ocean. In Europe, on the day of the Derby, or some other big event, the films are shown in the moving picture houses on the same night. In this country it is genrally a week or more before they appear.

Not long ago there was a terrific explosion at the power house of the Grand Central depot, in which many were killed. It was soon seen that this explosion would assume the characteristic of a terrible disaster. Realizing this, the moving picture camera man was soon upon the scene, and while, of course, the explosion itself could not be photographed, the film showed the scene of wreckage as well as the details and incidents of the rescue of the imprisoned, and makes a very interesting film.

Credit for the dispatch with which this was done must be given to Pathé Frères, who made the film, which was displayed in the Manhattan theater, not long after the accident. It is unusual to record events of this sort by the moving picture, and it would be a good thing for the industry if more of this kind of activity was displayed, although everybody hopes that scenes of that character will be very, very scarce.

The annual meeting of the licensees of the M. P Patent Company took place December 19 in New York City. The meeting was followed by a dinner at the Plaza hotel, which was attended by all the licensed manufacturers, including Thomas A. Edison himself. At this meeting it was decided to adopt the policy of having all bulletins printed in a uniform size, and on only one side of a single sheet of paper. This will enable the exhibitors to post these bulletins in the lobbies of their theaters. This is a most excellent feature and will prove of great help to the showmen in the business.

Managers of moving picture theaters in Philadelphia are in a quandary how to proceed in arranging their programs, on account of the city and state license laws. A picture theater is charged a license fee of $100 annually. This is irrespective of the size of the house. However, under the terms of the Pennsylvania laws, as soon as an moving picture house shows vaudeville it is subject to a license fee as a vaudeville house. His fee is $21.25 for a house seating less than 400 people, and a vaudeville house having a seating capacity greater than 400 is subject to an annual tax of $501.25.

This has caused considerable confusion and already two proprietors have run foul of this law in a very unpleasant manner.

Exhibitors had expected the customary slump in business during the week before Christmas. Throughout the theatrical world this week is dreaded as is no other. Photoplay exhibitors for some unknown reason have grown to worry about this week also, but reports since then show that the business was not only normal but was actually a little above par.

Right here let us say to all moving picture exhibitors that the sooner they get over measuring the film industry by theatrical standards, the better it will be for their attendance records. Time was when every exhibitor dreaded the summer months, Lent, the week before Christmas, and any other old time that he could conjure up bad luck. Experience has proven that if an exhibitor will use a little judgment in selecting film he can get together a show that will increase his business above normal. Make your show fit the season, and summer or winter you will have no cause to complain.

The revised "Time Table" of Great Northern films has come to hand and promises some most excellent subjects. One is impressed with the dramatic possibilities of the release of January 7, entitled "The Red Light," a military drama of the Russo-Japanese war. This is truly a fascinating film of excellent photographic quality.

The Value of Educational Films

The following copy sent to 300 Illinois papers on December 10 by the press service bureau of the National Association for the Study and Prevention of Tuberculosis, indicates the aggressive steps being taken by Frank E. Wing, secretary of the Illinois branch, to interest the press of the state and thereby secure the exhibition of the Edison Red Cross film in every theater in the state of Illinois:

HEALTH COMMISSIONER EVANS AS DRAMATIC CENSOR.

Health Commissioner Dr. W. A. Evans appeared in a new role yesterday—that of dramatic censor. The guardian of the city's health did not attempt to pasteurize "Salome," but he gave his unqualified approval of a moving picture film which is to be placed on exhibition in Chicago nickel theaters in a few days.

Accompanied by Harlow N. Higinbotham, Dr. Theodore B. Sachs, Frank E. Wing, and M. L. Dorr of the Chicago Tuberculosis Institute; John Hardin, western representative of the Edison Manufacturing Company, and other friends, Dr. Evans visited the rooms of the Selig Company to pass judgment on a new film. The film, which has been manufactured by the Edison Company, depicts a story of misery caused by tuberculosis and of the sunshine and happiness which the campaign of the American National Red Cross brings to the stricken family.

The plot centers around a poor girl in a tenement house in New York, who won a prize of $100 for the best design for the Red Cross Christmas seal for 1910. Though she needs the money to pay a course of study in an art school, she cheerfully gives it up to a neighbor to save the life of a consumptive boy by sending him to a sanatorium. Her self-sacrifice attracts the attention of a young millionaire, who, disguised as a laborer, goes to live in the same tenement house, wins her affection and marries her, and they live happily ever afterward.

"I heartily approve of the story told on the film," said Dr. Evans, "because of its tremendous educational value. I wish that more such pictures could be shown in the small theaters. The health of the people is the question of first importance and I am glad to know that the film companies are working with the National Red Cross in its campaign against tuberculosis. The pictures show the efficacy of the Red Cross seal in the fight."

"I agree with Dr. Evans on the educational value of the pictures," said Mr. Wing, "but I wish they could be seen by the well-to-do class of citizens. The poorer classes are coming to understand the necessity of taking care of their health, but in a large measure they are helpless. They cannot afford to quit work and go to a sanatorium when the first symptoms of tuberculosis appears and they keep on hoping against hope until the disease has firmly fastened itself upon them. If the rich could be made to see the necessity of treating tuberculous persons in the incipient stages, I am sure they would be willing to contribute liberally to the cause."

"The film tells its story in a graphic manner," said Mr. Dorr "In illustrating the transformation wrought in the hovel of the consumptive patient by the visiting nurse, it points out dramatically the effective work done with the money derived from the sale of Red Cross Christmas seals. It is a good story and will help the sale of the seals immensely."

The "Red Cross Seal" story will be exhibited December 16th, not only in Chicago nickel theaters, but throughout the country. It was written for the National Association for the Study and Prevention of Tuberculosis, co-operating with the American National Red Cross.

"I hope that this film will do something to show the people of Milwaukee that they have a responsibility

which cannot be taken care of until the city gets the money to do the work with," said Mayor Emil Seidel, the popular socialistic executive of that city, after an exhibition of "The Red Cross Seal" in the Princess theater, that city, December 7. "As for the film itself, I really cannot speak of it. I am rather ashamed, just this minute, because I am so soft-hearted. But if we had more films of this type, films with educational as well as agitational features in them, less would be said against our moving picture theaters"

The exhibiton, which was of a private nature, was witnessed by health officials, the police commission, representative citizens, ministers, newspaper men and persons engaged in Red Cross work in Milwaukee. The following opinions of the film expressed by several of the prominent people attendant will indicate the extent to which it was appreciated:

Mrs. Alice Merry, director of playgrounds: "I am a firm believer in the moving picture shows. The play is remarkably true to life. In my work every day I visit tenement and sick rooms like those shown in the play. I know of no better way to educate the people than by a play of this sort."

Rev. Samuel Hirschberg: "They were not only wonderfully good pictures, but they told the story with enough sentiment to ameliorate the story told of suffering due to consumption and conditions which cause consumption."

Health Commissioner Kraft: "The pictures should be of imense educational value in the white plague fight. They reach people we could not otherwise reach."

Mrs. J. P. Sherer, Mother and Teachers' Club: "The pictures will be a revelation to those who have never seen similar conditions, and I hope many such people see them."

H. H. Jacobs: "I wish every man and woman who does not know what tuberculosis means in the homes of the poor could see the pictures. They would learn what the white plague is and what buying a Red Cross Christmas seal means."

Samuel Rabinovitch of the Hebrew Relief Association: "The greatest value of this drama lies in the fact that the very people whom we wish to reach with this education can be reached only through the moving picture show. The play is great, the interest is sustained to the end. Such a play has a greater educational value than any amount of pamphlets and public lectures."

Speaking of the film Mr. Wing says: "Aside from the aid which the film will give to the sale of Red Cross seals, its educational value is very great, teaching as it does most emphatically the essential dangers that lurk in housing consumptives in unsanitary dwellings; how the danger may be avoided; the importance of disinfection, renovation, and open air treatment; and above all showing how the Red Cross Christmas seal may be the agent of carrying hope, health and happiness to thousands of homes in Illinois."

Luminous and Flame Arcs

The General Electric Company has recently issued a pamphlet which is a reprint of the paper read before the National Electric Light Association on the subject of "Street Illumination." This pamphlet compares the results obtained from the use of luminous and flame arcs with those resulting from the use of open and enclosed carbon arcs. The subject is treated from the standpoint of the illuminating engineer and is discussed in detail.

The pamphlet contains half-tone illustrations showing street illumination by luminous arcs in various cities. There are also numerous diagrams. The subject is treated exhaustively and should be of great interest.

Pathé Bulletins Take a New Form

Pathé Frères recently took a vote from all the exhibitors to whom their bulletins are sent as to the size and shape of bulletin most desired. As the result of this the Pathés have adopted a flat bulletin with a large cut six and a half inches across and with a description printed below in good legible type. The size will be 13¼ by 10 inches, as this seems to be the size most desired by the exhibitors. It is said that all the licensed manufacturers have decided to standardize the weekly bulletin by universally adopting this size and thus making it a convenience to exhibitors for both filing and for exhibiting in frames in their lobbies.

No Place for Shirtwaist Boys

The right of a citizen to visit a moving picture show in his shirt sleeves will be decided in a suit brought by George McFadden against Keith & Proctor to recover $10,000.

When Mr. McFadden went to a moving picture house in Harlem and asked for a ticket the young woman in the booth said:

"Nothing doing for shirtwaist men. Go home and dress up."

Mr. McFadden consulted Louis A. Cuvillier, who made a complaint and filed the suit.

Announcement is made that the Lumiere Company will enlarge its factory at Burlington, Vt. A company has been formed to take over the plant and will manufacture moving picture films and dry plates. The "Sigma" emulsion, a very rapid emulsion, will be coated on negative moving picture films which will prove valuable for the moving picture man. It is said the principle of the Autochrome plates which reproduce colors may also be applied to the manufacture of moving picture film positives. If necessary the Lumiere plant will manufacture non-inflammable films. The new company will be incorporated for $1,000,000.

A stork called at the home of Mr. and Mrs. Archer McMackin during December and left a fine baby girl. The father confesses to having lost much sleep over the episode, this being the first time Mr. Stork ever appeared on the McMackin premises. Mr. McMackin holds the position of scenario editor and advertising manager at the Essanay plant, and is well known to the Chicago "bunch."

A beautifully engraved "greeting" suitable to the season, bearing the Indian head embossed in colors, was sent out to the trade by the Essanay Film Manufacturing Company around Christmas time. It bears an announcement that the company has opened new city offices at Suite 521, First National Bank building, Chicago.

Synopses of Current Films

American

MRS. GAYLIFE'S VISITORS

Ole Johnson decides that he ought to marry. Decides to insert an ad. in the paper. He receives an answer from a Swedish girl in a town not far from his home. Ole answers the maiden's letter sending her a photograph of himself and requesting one of her's in return. Steena Iverson, the lady fair, is not the most beautiful lady in existence, and fearing to spoil her chances of marriage, decides not to send one of her photos but one of her mistress instead. Ole receives the photo and decides to pay a visit to Steena. Meanwhile the lady of the house, Mrs. Gaylife has been informed by her husband that he has been called away. Mrs. Gaylife intends not to be lonely during her husband's absence, so sends for another companion. They leave to spend a pleasant evening together. Ole has arrived to pay the promised visit to his unknown lady love. Steena allows him to enter, but Ole cannot see her face, which is covered by a veil. He begs and pleads with her to remove it, but she refuses. Confusion is heard outside announcing the return of Mrs. Gaylife and her vis-a-vis. Steena hides Ole in the closet as Mr. Gaylife and gentleman enter. They are enjoying a quiet tete-a-tete, when the bell rings outside announcing the return of Mr. Gaylife. Mrs. Gaylife tells the gentleman to go into the closet, but instead he hides behind the screen. Mr. Gaylife enters and embraces his wife and turns to place his grip and coat in the closet when she stops him, takes them from him and leaves the room with them. Husband becomes suspicious, turns and sees Ole's hat nad cane, thinks he is wise, starts for closet when Mrs. Gaylife stops him. He accuses her and she having seen the friend behind the screen, goes to the door to prove him wrong. She opens the door and Ole comes out. Husband demands an explanation. Ole tells him he came to marry Mrs. Gaylife, showing the photograph. Mrs. Gaylife tells him she has never seen him before. Steena has overheard the whole transaction and tells them he came to marry her. Ole gets one glance at Steena's face and makes a getaway. Mr. and Mrs. Gaylife embrace most lovingly and while they are paiyng no attention to him, Mr. Friend makes a getaway unseen by anyone —970 feet. Released January 2.

THE TENDERFOOT'S ROUNDUP.

Some mothers-in-law are convenient, others are obnoxious. This one was—well it's up to you. She butted in and upbraided her son-in-law for being pinched in a gambling house raid. He, half demented by indignation and shame, left his young wife and his Eastern home and went out to Billy Wither's ranch at Santa Fe. The cowboys made a mark of him until he learned their tricks, and then, they all bore his marks. After several months, a telegram came to him from home. Its contents was startling, and he started away for the train on Billy Wither's horse. The sheriff thought him a horse thief, but the telegram was a passport and he was allowed to ride after the limited, which was just pulling out. He leaped from his saddle to the back platform of the train and was met by the conductor. The telegram again secured his passport and he arrived at his home in all his Western regalia. Bounding up the front steps, he burst into the house and up to his wife's bedroom. The nurse entered, bearing an infant, and the happy tenderfoot's little family was rounded up with no mother-in-law to interfere.—950 feet. Released January 5.

AN ARIZONA ROMANCE.

Dave Denton, the young owner of a large ostrich farm near Phoenix, has had the good fortune to save the life of Sylvia Ford, the daughter of the prominent banker of the town, and in observance of the customary rule in such cases, falls in love with her, which feeling is returned in kind. Paternal opposition is for a time a serious obstacle, but western men as a rule get what they set their minds on obtaining and Dave, who is full of red western blood, is a worthy representative of the type. He takes the law into his own hands and the girl at the same time. They are married and in due time persuade the old gentleman that it is up to him to grant his blessing.—990 feet. Released January 9.

LUCY'S LOVER.

Squire Skeeter's daughter has fallen in love with a young man to whom the father has taken a dislike and who determines to break up the affair. Henry, a servant, brings a letter addressed to the daughter. The old man takes possession of it and reading it finds it is a plan whereby the two young folks will elope. In anger, he tells Henry to kill the lover if he comes near the house. The lover comes to see the sweetheart and Henry attempts to prevent it, but is won over by the sight of money. The old man hands Henry a rope, bidding him tie up the lover, which he does. When the girl comes on Henry passes his arms through those of the lover and the girl becomes indignant and leaves. The father comes back to see how this plan has worked and is told by the lover that he is going away. They shake hands and the Squire is given a rude shake-up, but accepts an apology. Meanwhile, offering the lover a pinch of snuff, Henry knocks the box from his hand and he leaves in anger. The lover is discouraged, when Henry tells him of a plan to help him. He will tell the Squire a story and as he tells it the lover must enact it. The old man comes in and listens to the story, in which the lovre removes the key from the Squire's pocket, liberates the girl, and they proceed to the minister's house and return later and tell the fathr of their marriage. He forgives them and gives his blessing.—560 feet.

THE BORROWED FLAT.

Percy and Bobby are companions. Percy is in debt and Bobby is in love. Percy enters. Crowd outside have been hooting him. He cannot understand why until he gazes at the calendar and sees it is the first day of April. He looks and finds a "Please Kick Me" sign on his back. He is down and out. The janitor hands him a letter from his aunt, the contents telling him that she would not forget him in her will. Percy is overjoyed at the news, looks around the room and decides it would never do for aunt to see some of its contents. See the pictures of two women very much decolette. He decides to change them. He takes them down and reverses them. Getting a paint brush, he writes on the back of one, "What Is Home Without an Aunt?" And on the opposite one, "Love Your Relations." Percy hears someone at the door, goes hurriedly to meet his aunt, throwing his arms around Bobby instead. Bobby wants the use of Percy's room to meet his financee in. Percy gives consent, and Bobby writes a note to his lady love. Percy looks at the addressed envelope, glances at the calendar and laughs. He removes the letter from the envelope and addresses another one, sending it to the washerwoman. He gives the letter to the janitor. Percy then leaves Bobby to meet his affinity alone. A rap is heard and Bobby, thinking it is his sweetheart, goes to the door with arms outstretched to receive her, but is horrified to have Bridget fall into his arms, who tells him she came to marry him and shows the letter. Bobby tries to explain to her. She stumbles and falls into a trunk. Bobby closes the lid. He looks around for some place to put the trunk, an ddecides to throw it from the window. Bobby, vowing vengeance, goes to the table, spies letter, reads it, and decides re will impersonate Percy's aunt. He finds an old masquerade costume, makes a quick getaway just as Percy enters very much relieved that his aunt has not arrived. He has bought a present for her, looks at it, and it falls. He gets down on his knees and looks for it. Finally gets under the table. Percy peeps from under the table and discovers the joke that Bobby intends to perpetrate. Percy crawls from under the table and begins to disrobe. He hears someone coming and goes to the door, when, instead of the pseudo, the real aunt appears. Percy begins a decided rough house play with her. Bobby enters. Percy turns and sees him, and is astounded to see that he has been abusing his real aunt. He drops on his knees, imploring her pardon, but she refuses to listen. Bobby has removed his female wardrobe and proceeds to take the Aunt's part. He offers her his arm and starts toward the door. Percy turns to signs, tears one down and smashes it and is about to smash the other one, when the poor washwoman enters and gets it full force over her head. She falls to the floor. She holds her hands out to him imploringly and Percy seeing no way of escape, throws up his hands in despair and dives out of the window.—420 feet. Released January 12.

Biograph

THE TWO PATHS.

As we start out on life's journey two pathways lie out before us, the rosy path ot pleasure and the thorny path of toil. The maxim reads: "All roads lead to Rome," but these two roads lead to widely divergent points. On the path of pleasure we are titillated by the velvet brush of the rose and intoxicated by its perfume until at the awakening we find ourselves morally, mentally and physically debilitated. On the other path, where all is real, we by the trials of toil are kept morally awake and made to realize that pleasure does not bring happiness but peace of conscience will. This truth is clearly verified in this Biograph subject telling the story of two sisters who traveled diverging roads. Florence and Nellie are dressmakers, sewing to eke an existence. A wealthy woman calls for a gown they had just finished. She is accompanied by an unconscionable profligate, who, tempting the girls in turn, points out the "easy way." Nellie spurns him but Florence harkens to his persuasions and accompanies him to where all is pleasure. He brings her to his mansion, a palace of pleasure during a bacchanal orgie. She at once becomes obsessed with the

spirit of revelry and is swept on to the inevitable goal, the morass of moral indifference. Nellie, however, is content in the house of toil and "She layeth her hands to the spindle, and her hands hold the distaff," marrying her honest, manly sweetheart, receiving as the years roll on the greatest of God's blessings, a family of three children. How terrible is the one's fate in contrast with the other's. Steeped in the toxin of gaiety she goes down, down until there is no chance for retreat. She, up to now, the toy of the tempter, grows unattractive to him and he unceremoniously discards her, putting her out to shift as best she can. An outcast, she now realizes the reward of worldliness, "For her home inclineth unto death and her path unto the dead." Hence, in the squalor of her hovel death comes and she has reached the inevitable, Nellie has been guided by the Proverb, "The path of the just is as a shining light, that shineth more and more unto the perfect day." We realize the result of this as we leave the happy little family sitting by their fireside.—992 feet. Released January 2.

WHEN A MAN LOVES.

Love smooths out all wrinkles and makes the whole world good-natured. The man in love is never possessed of a grouch, for love and ill humor will not chum together in the same make-up. Hence it was that when

Mr. Bach was stricken with the tender passion, he was ripe for any extreme of generosity. Mr. Bach, now a wealthy man, visits the scenes of his boyhood days in his auto and meets Farmer Brown, his boyhood friend. Brown is the father of a very pretty daughter named Tessie. Bach becomes deeply smitten with the artless little country lass, and secretly hopes to win her. Tessie, however, has a host of admirers in the little village, the favored one being John Watson. John is a bit supeiror to the other fellows of the neighborhood. He reads novels and has a good line of persuasive talk with which to embellish his suit for Tessie's heart, and he is successful, to the violent perturbation of the other swain. Now Tessie is of course pleased with the notice bestowed on her by the rich bachelor, but her heart is true to John. A few days later Mr. Bach, lovelorn, revisits the homestead. His presence stirs John up to deeds of determination. In this frame of mind he seeks Tessie and plans to elope that very night. He will be beneath her window with a ladder. Mr. Bach, to remain at the homestead, uses the subterfuge that his auto has become disabled and he would like to spend the night with his old friend Brown. Brown is delighted, for he has discerned the attention Tessie has exerted. To accommodate Mr. Bach, Tessie is put out of her own room by her father and the room given to Mr. Bach. Oh! horror! This spoils the plans for the elopement. Curse the luck! Poor Tessie is locked in the adjoining room out of reach of John. John arrives beneath the window and calls, "Sweetheart, I am waiting," repeating it a number of times. He cannot understand why he does not get an answer, so throws several pebbles through the window. At length, growing impatient, he places the ladder and climbs into the window, encountering the astounded Mr. Bach, who, mistaking him for one of those sinster intruders, a burglar, is about to throw him out when he explains the situation. This is very odious news to Bach, but as "all the world loves a lover," his heart softens and he consents to aid the couple in their flight. In other words, he leads the wedding march by piling them into his auto and speeding to the nearest minister's abode. Brown soon learns of his daughter's escape from the room in which he locked her, and fearing the very thing that is happening, starts out in pursuit in a buggy, arriving at the minister's just too late to forbid the bans but in time to give his paternal blessing to Mr. and Mrs. John Watson.—998 feet. Released January 5.

THE ITALIAN BARBER.

There is no easier victim of Cupid's darts than the Italian, and the miniature unclothed God has no need to resort to his many time-honored trimmings, such as the moonlight, babbling brooks or shady lanes to induce cardiacal intoxication. A pretty face, and the Latin gentleman falls. A portrayal of this is given in this Biograph comedy drama. Tony, the barber, on his way to the shop meets little Alice, the newsgirl, who runs a stand on a neighboring corner. He at once becomes smitten, and can think of nothing else. Later they are betrothed and little Alice fancies she has made a good catch. However, clouds gather when Alice's sister Florence, who is a vaudeville artist, returns from her road tour with her sketch partner, Bobby Mack, for the moment Tony sees Florence he transfers his affections to her. Poor Alice becomes aware of the waning of Tony's love for her, and the heavy blow falls when on the night of the Barbers' ball Tony escorts Florence thither. Alice, being excessively romantic, reasons that life without Tony is impossible, so she is about to emulate the heroine of a novel she has been reading by terminating her unendurable existence

with a pistol when Mack enters. The bullet she intended for her own love-turned head passes through Mack's hat, scaring him stiff. Recovering himself, he wants to know the cause of this rash attempt at self-slaughter, and Alice tells him in detail of the inconstancy of Florence and Tony. At first Mack is wild with rage, but on second thought he realizes that Florence is not worth worrying over as far as he is concerned, and convinces Alice of the same of Tony, so then and there a new vaudeville team is formed, with prospects of something even more serious. Mack invites Alice to go to the ball with him, which invitation she most willingly accepts. At the ball the two couples meet, and for a moment it looks as if there is going to be something doing. However, the ruffled condition of the situation is smoothed out and each swain is well satisfied with the change of hearts and the quartette find significance in the dancing master's call "Hands all around," "Change your partner." Hence it is now certain that Alice and Mack, the celebrated protean artists, will now delight the hearts of the vaudeville fans, while Tony will lather and shave to maintain a home for the ex-vaudeville artist Florence.—993 feet. Released January 9.

THE MIONIGHT MARAUDER.

The braggadocio is always cooking up trouble for himself, because he is forever setting such a high standard for himself that it is impossible for him to attain it, and prove it he must. Mr. Blowhard is boasting of his wonderful prowess to a party of friends, stating that he is afraid of nothing—human or beast. He goes so far as to tell them that the bearskin rug adorninng his room is a trophy of a bear hunt, when he subdued and killed the mighty bruin with no other weapons than his strong arms and hands. They for politeness sake pretend to believe him and he becomes as chesty as a blower pigeon. That night there calls a burglar on an expedition of pilfering. He is a bungling fellow and overturns some article of furniture at every step. The noise arouses the Blowhards and he has a chance to prove his metal. Well, it was a case of one trying to get away from the other, and in the mixup they fall out of the window with Blowhard uppermost, thereby saving him bodily injury. The burglar is taken into custody by the policeman on the beat. At first glance at the morning paper you would assume Blowhard a hero, but—that "but" is the second line of the heading, which gives the credit where it is due.—392 feet.

HELP WANTEO.

Don't pull a bluff, for it may be called, and there is no more uncomfortable feeling than that after having a bluff called. Of course, Jack was in dire distress when he made a desperate appeal to his uncle for money. On account of his reckless habits, Jack's allowance from his uncle is cut off. His pleas for a restitution have been received with a deaf ear by uncle until he is forced to resort to some extreme measure in order to make uncle loosen up. A great idea strikes him and he at once proceeds to put it into effect by writing the following letter: "Dear Uncle:—Since you have cut off my allowance I face starvation. Unless we can make peace before eight o'clock I shall commit suicide and the family name will be disgraced." The uncle receives this letter while he is superintending the decoration of the reception room preparatory to his daughter's birthday party, and in his excitement he forgets it. Meanwhile the clock's hands are moving slowly but surely towards the fatal hour, while Jack is preparing for his fake shuffle. First he considers hanging, but that don't seem dignified; poison would be better, hence he fills a bottle labeled "Poison" with water, from which he drinks copiously. Still uncle doesn't come. Of course we see the reason. It is 8:30 when he remembers the letter, and after reading the contents makes a mad dash for his nephew's rooms, only to discover with the aid of the doctor the hoax Jack has perpetrated. So, instead of giving him financial help, hands him the "Help Wanted" page of the morning paper. A broad hint to look for work.—605 feet. Released January 12.

IN THE DAYS OF CHIVALRY.

Edison

The story concerns itself with the trials through which two young yovers pass and over which their sweet love triumphs. It begins with the rescue of a beautiful captive maiden from a band of his own soldiers by the son of the reigning Duke. He brings the girl to his father and asks that he be allowed to wed her. And here their troubles begin. The maiden is incontinently cast into a dungeon by the irate father, despite the pleas of the young man, but she escapes by means of a rope which she makes from torn up strips of the blanket that covers her rude bed. In the meantime the young man has made a bargain with his father; he will lead the old man's forces against the enemy on the condition that if he comes back triumphant he may have the girl of his choice. He does come back triumphant and with a royal captive. We see him approach the castle, the drawbridge is lowered and the father comes out to meet his son. But when he learns that the battle has been won and that the son has kept his part of the bargain he still refuses to fulfill his part, and a quarrel ensues between them. The young man is put into close confinement by the old Duke and only released when news comes that the captive girl has escaped. Then, feeling that she is out of the way, the father betrothes the young man against his will to a Princess, but the youth slips away from the betrothal ceremony, and mounting his fleet white horse, rides off across the country in search of the little lady of his heart's desire. Of course he finds her, in a bower of flowers in the woods, and then they take ship for other lands. But the pirates attack them and carry away the girl, and when the battle is over the young Duke knows not where to search for her. He returns disconsolate to his ancestral home to find his father dead and himself become the ruling Duke. Meantime the girl has been taken by the pirates to the Court of Carthage. There she is recognized as the long lost daughter of the King of that country. Once more a parent tries to o'errule Cupid, and the little maiden is unwillingly betrothed to a suitor provided by her father. But she has not forgotten her faithful lover in other lands, and borrowing the suit of a harper, she escapes from her father's court and wanders through the lands, playing her way and singing to the natives, till she reaches the castle of Beaucaire, where the new Duke reigns. The final scene shows the reunion of the lovers and will long be remembered by all who are fortunate enough to see this beautiful film.—1,000 feet. Released January 3.

SLEEP, GENTLE SLEEP.

A young married man receives an invitation to a smoker. It is his desire to accept the invitation and attend the smoker, but his young wife is equally desirous to keep him at home. After pouting a while she conceives the idea of putting a sleeping powder into his table wine, hoping that he will fall asleep and thus be prevented from going to the smoker. By a strange coincidence the young husband hits upon the same plan and puts a sleeping powder into her tea, so that he may be sure to attend the smoker without interference. The result is that they both fall sound asleep. During the night a hungry tramp gains access to the house through a window. While searching the larder for something to eat he finds the bottle of table wine containing the sleeping powder. It looks good to him and he helps himself to a goodly portion, and is soon fast asleep in the dining room. The following morning when the housemaid enters the dining room to perform her duties she almost stumbles over the sleeping tramp and is nearly frightened out of her wits. She screams loudly for help, which brings a policeman on the run. Arousing the young busband and his wife, she promptly faints. Amidst great confusion the policeman arrives and arrests the tramp for trespassing. The young couple now see the funny side of the sleeping powder joke and have a good laugh over it.—990 feet. Released January 4.

THE FIRE OEPARTMENT OF NEW YORK CITY.

Nothing is more interesting to all of us than the fighters of fire in a great city. Whose blood does not tingle as he hears the clang of the bell and stands one side to let the engine go dashing past? And if he is privileged to see the work of the firemen at close range, has he not something to talk about and think of for a long time? All this we see in the picture, besides the practice work of the men in putting up and ascending scaling ladders, descending the life ropes and jumping into the life nets. Most interesting of all are the views of the fire boats in operation at the close of the picture. One of these boats, with all streams in operation, is like a gigantic flower pot, the sight being wonderfully beautiful and im-

pressive. New York City is justly proud of its efficient Fire Department, and people in all parts of the world will be glad to make the acquaintance of the intrepid fire-laddies on the motion picture screen.—400 feet.

A WESTERN NIGHT.

At the opening of the picture we are introduced to a little lady of quality in her Eastern home, surrounded by all the luxury and wealth that one could wish for. She has been invited by her uncle and aunt to spend a few weeks with them in their Western ranch house. The offer appeals to her, and she accepts the invitation, but not without some fear and hesitation as to the trip, for she finds that she will be compelled to pass a night alone in a Western town. However, she decides to take the journey and proceeds upon her way. We see her arriving in a Western town, alighting from the old stage coach and escorted into a typical Western hotel. After being shown to a room that has anything but an inviting appearance, she promptly sets to work barricading the door from all intruders. Wrapping herself in a lap robe, she proceeds to wait for the morning light before continuing on her journey. Scarcely has she become settled before the room next door to her is occupied by a typical Western man. She can hear the rattle of spurs, the coarse language and his demands for whiskey. Her heart is all a-tremble, visions of being murdered creep into her mind, and at every sound she is thrown into a spasm of fear; while the fact of the matter is that her rough neighbor is simply proceeding to retire for the night in his usual brisk manner. At last, worn out with fear and fright, the girl decides to peek through the keyhole and ascertain how dangerous her terrible neighbor really is. Imagine her surprise when she finds the boisterous "Knight of the Plains" kneeling beside his bed and offering up his nightly prayer to his Maker. Soon all the fears of the night have folded their tents like the Arabs and silently stolen away, and she is sound asleep and on her way to Dreamland.—600 feet. Released January 6.

THE TEST OF FRIENDSHIP.

When we deal with the huge "sky-scrapers" of our big cities, some of which are eighteen and twenty stories high and more, we are dealing with a purely American subject. The story deals with men of brawn and muscle, men of good red blood and nerve, men of steel and iron, who look like mere pygmies silhouetted against the blue sky, high up above the sidewalk, as they climb and haul and draw themselves up, and still higher up, on this huge black monster, through whose ribs the winds whistle and birds flutter hither and thither. Fearlessly they swing themselves in and out upon the iron girders with a snatch of song or a merry jest upon their lips, or their thoughts wandering to some loved one who waits and watches with mingled hope and dread for their safe return; contemptuous of danger they are by reason of its constant presence, heedless and careless of the awful death that waits upon their slightest misstep. Two of the workmen, Tom and Jim, whose fists are as hard as steel but whose hearts are of sterling worth, are in love with the same lady. Tom believes that Jim is the successful one and though hard hit, takes the blow like a man; but the supreme test of friendship comes when Jim, who has a quarrel with a truck driver on the top of a huge sky structure, is knocked unconscious and is hung out over the sidewalk twenty-two stories below. The slightest move one way or the other and he is dashed to death, and when Tom is called upon to save Jim's life at the risk of his own, it is a test that proves the metal of the man. There they swing in mid-air, Tom and Jim, clinging together at this dizzy height. A thriller, a supremely dramatic moment in the motion picture art. The rescue and the winning of the girl by Tom gives a sweet touch of human nature to the close of this exciting picture.—1,000 feet. Released January 10.

THE HOME OF THE SEAL.

This is a series of views, taken at close range, of the harbor seals on the Palominas Islands, off the cost of Peru, in their seemingly mad battle with the waves as they dash against the rocks. By hundreds they swim back and forth in the wild whirl of water, making desperate efforts to land on the rock—and all for what? Apparently, that when they have once succeeded in landing they may have the fun of tumbling off into the water again! Anyway, whatever their motives may be they present a wonderfully interesting sight whirling and struggling about in the mad whirlpool, with the waves advancing and receding on the rocks as a background. A short section of film at the beginning shows some interesting views of the fishermen of Ancon, Peru, sailing and racing in their little craft with the very curious lateen rig.—300 feet.

THE GARDENER'S LADDER.

A stern old father one afternoon, chancing to see a young man proposing to his daughter, becomes infuriated, orders the young man from the premises and locks his daughter in her room. The mother, being in sympathy with the daughter, endeavors to intercede, but to no avail. The father, very much agitated over the distressing state of affairs, repairs to the garden for a walk and almost stumbles over a ladder which the gardener has placed against the balcony adjoining his daughter's room. Seeing the position of the ladder, he immediately jumps to the conclusion that his daughter has eloped, and without investigation he rushes off in a most excited manner in search of her. He meets a stranger on the corner and questions him as to his daughter. The stranger, seeing the old gentleman's perturbed state of mind, tells him of having seen a couple entering a nearby rectory just a few moments previous. He hastens to the rectory, where he finds the young man, whom without further inquiry he belabors. Then turning his attention to the young lady whom he thought to be his daughter, he finds to his amazement that it is a case of mistaken identity. Not feeling assured that she is not in the house, he makes a wild search and upsets all the furniture. He then rushes madly home, followed by all the others who summon a policeman to their aid. The old man dashes to the locked door, and we flash to the poor maiden inside, sobbing for her lost love as she has been all the time. The father has hardly time to recover from his surprise before the others burst into the room, and the lover, taking advantage of the situation, threatens to have him arrested for assault and battery unless allowed to wed his daughter. For a time remonstrances are unavailing, but finally, as the sub-title has it "the stern old parent is forced to surrender and Cupid triumphs."—700 feet. Released January 11.

THE LINK THAT HELD.

There is a foolish little wife who is dissatisfied with her humble estate, and in spite of the fact that she in a way loves her plodding husband and pretty little baby, is far from happy. The husband is one of those passive but fundamentally true-natured men, whose economic position is such that he feels he must run no risks which might prevent his providing well for his little family. His employer, a man about town, meets the young wife and becomes attracted by her beauty. He takes her for a ride in his automobile and brings her to the office, where her husband is at work. On another day when she comes with the baby he takes her into the inner office to show her paintings and statuary and to advance his flirtation a little further. The little girl, who becomes "The Link that Held," seeing her father's suffering without understanding it, goes into the inner office to summon the little mother. The entrance of the child in the midst of their flirtation suddenly brings sanity to the two people. The young wife leaves the room in tears, and the baby, remaining, slips her hand into that of the possible destroyer of their home. The touch of the childish hand is too much for the man and makes him realize what harm he might have done. Of course when the husband returns to his home, which he believes is home no longer in the true sense of the word, he finds his little wife carrying out new resolutions and quite willing to be held by "The Little Link" and by her love for her husband.—960 feet. Released January 13.

THE REDEEMED CRIMINAL.

Essanay

Spike Hennessy, cracksman and his pal Kid Carson, blow the safe of the Continental Trust Company, and are just about to pack up the loot when they are discovered by the night watchman. Hennessy, a man of powerful physique, grapples with the officer, and gives the Kid his chance to escape. Hennessy knocks the watchman insensible, but is captured by several police officers who have come in answer to the police alarm. Hennessy is submitted to the Third Degree, but, although the police are morally certain that he had an accomplice, they cannot wring a confession from him, and he will not reveal the identity of his pal. He is sentenced to twenty years, and serves his time, still maintaining that he was alone on the job. Carson reforms, and later becomes a minister of the gospel. Striving to atone for his past misdeeds by living an upright life and working for the good of his fellowmen. He is married and has a grown son, who is in love with Margaret Fairfield, a young society woman. Hennessy, released from prison, returns to his old and evil ways, and proves that his hand has not lost its cunning, by cracking the safe at the Fairfield mansion, looting it of the family jewels. One of the stolen pieces being the Fairfield necklace, a valuable heirloom. Detectives, immediately conclude that the work was Hennessy's, and they are in close pursuit of him, when he takes refuge in the house of his former pal, now the Rev. Doctor Carson. Confronting the surprised minister in his study, Hennessy swings open the door of the small safe,

places the diamonds within and locks it, demanding that the minister protect him from the police. When the officers arrive, Carson represents to them that Hennessy is his butler, and Spike escapes, telling his former pal that he will return for the loot. Carson's son finds the jewels in the safe and it is with difficulty that the father convinces the boy that he is not the thief. Carson, determined that Hennessy shall not regain possession of the jewels, resolves to return them to their owner in the same manner in which they were stolen, and attired in his old burglar's garb, goes to the Fairfield mansion, breaks in, opens the safe and replaces the jewels. The next morning the public is electrified by reading that the Fairfield jewels are mysteriously returned. Hennessy, wrathfully confronts Carson, demands the meaning of it. Carson tells Hennessy that he has replaced the jewels and that he has resolved that this shall be Hennessy's last thing. So strongly does he plead with him, and so powerful is the effect of his sermon, that Hennessy pledges his word to reform and lead an upright life. Carson secures him a position, using his influence as a minister to do so, and as the picture closes we find the redeemed criminal, now a respected citizen and a man of family, receiving a visit from his pal the Rev. Doctor Carson.—1,000 feet. Released January 3.

THE COUNT AND THE COWBOYS.

Famous for their comedies the Essanay western players are entitled to the highest honors in this remarkable comedy photoplay, which is strongly recommended by them as the best ever. The plot of the story, outlined below, bears evidence of great opportunity for the excellent Essany players, and judging from their previous big comedy hits, this one should prove of extraordinary merit. Count Alphonse Louis Francis Catelene makes his appearance in the little town of Rawhide, via the stage coach and presents the proprietor of the tavern with a letter of introduction from this latter's former friend in the East. The note reads: Friend Mackley: This will introduce you to Count Castelene who comes to your town to look over mining properties. Show him what favors you can. Your friend, Jack Dupont." The Count looks the part. He is tall and lanky, clothed immaculately in the latest Parisian mode and style, and proves immediately a source of great wonder to the gaping cowboys who help him and his baggage from the coach. The Court presents his letter to the tavernkeeper, who sees great possibilities for the name and fame of his tavern in harboring a real nobleman. Consequently the Count is given the freedom of the city and told to make himself at home. It is not long after the Count has fairly established himself at the tavern, sur-

rounded by cowpunchers, that some altercation arises during which one of the cowboys draws a gun. The Count remonstrates with the cowboy and gives an illustration of how the French fight duels. "Stump" Carney, the mascot of the crowd of punchers in the meantime has entered the Count's chamber, regaled himself with the Count's long coat, high hat and muff and appeared upon the scene with a challenge for the Count. Stump is anxious to fight a duel, but his informality of procedure is discountenanced by the Count who begs to tender, through a second, a uniform, standard real code of honor challenge to combat. The challenge is tendered and the answer reads thusly "Bein' the challenged party I choos guns, but as I have six duels ahead of your'n, you will be the seventh that I kill tomorrow. Sikned Alkali Two Broncho Bustin' Pete." The morning

of the duel arrives and with his seconds the Count repairs to the field to witness first the encounter between Alkali (etc.) and the six other duellists. Of course, this part of the program had, with great care, been previously arranged, and the Count watches with ever increasing awe as Alkli renders his six combatants *hors du combat*. This is too much for the Count, who, having no desire to throw away his life, turns and runs with great haste down the road to catch the stage which is just leaving the tavern. The cowboys, who have enjoyed the sport, watch after him, holding their sides with laughter. Perched on the rear of the stage the Count thanks Heaven for sparing is life and makes a solemn vow that he will never again explain French duelling to western cowpunchers.—1,000 feet. Released January 7.

THE SOPHOMORE'S ROMANCE.

Little Flora Wiggins, a girl from a small town, is stage struck and after many applications for a position in some company is offered a position with the College Life Company, a musical comedy, and told to join at once. Three months slip by and Flora, who has met with many hardships as well as pleasures, has slowly become accustomed to the life, and has eschewed all the little luxuries that the others of the company have enjoyed that the weekly remittance to her mother back home will assure that dear old person of a comfortable living during the season's tour. The show arrives at a college town, where catastrophe awaits them. Their luck has been none too good the last few weeks and during the first performances a crowd of freshmen cause such a disturbance that the curtain is wrung down and the meagre audience leaves expostulating with the boys, and also blaming the company. It is with due credit to the freshmen that one of them may be said to have not sanctioned the boys' conduct after his eyes had fallen on the pretty Flora. Yet his remonstrations are of little avail after the evil has been done, and seeking out the manager of the show he makes apologies and begs to be introduced to the young leading lady. Flora has an admirer in the young juvenile of the company, who, when he sees young Curtis, makes a bluff to start something, but the two are separated by the girl. Curtis has

observed that the company is in anything but a cheerful mood. They are without funds and hopelessly stranded. And when his thoughts revert to Flora, who must suffer for the rowdiness of his cronies, he makes up his mind that things shall be righted for the company. At the railway station he finds the company and Todden, their manager, and puts the proposition that, inasmuch as the boys regret their actions at the first performance and would like to do something to help them out, they have proposed to lend their glee club if the company will remain for another night. Famous all over the state, the glee club would undoubtedly draw a good audience and the manager knows it. And on the spot he accepts, dispatching a little note to the theater manager, telling him the news and begging for another chance to make good. A little extra advertising and that night finds the house overflowing. The boys do their stunt and are roundly applauded. After the curtain has descended Curtis seeks out the company's manager and then Flora. The girl expresses her thanks in a grateful handclasp and with shining eyes, which hold for him something more than all the words she could utter. Flora decides to go home, and tells Curtis so. Curtis volunteers to see her to her train, and when she is not looking purchases a ticket to Flora's town. Unbeknownst to the girl, he follows her to her home, where, to her great surprise, he makes his appearance, confesses his love, and wins the consent of mother and daughter.—1,000 feet. Released January 10.

THE GIRL OF THE WEST.

Dick Graham's father runs the general store in a small western cattle town. Betty, his sister, assists her father in the store at the same time attending to the housework and, in a motherly sort of way, looking after Dick. The store nets the family a fairly good income and old Graham blindly proud of his son gives the boy a good allowance and his leisure time with the result that Dick falls into evil ways. His games finally break him and in deep debt he finds it necessary to appeal to his father and confess all or to, in some way, raise the money by going to work. Neither appeals to him and when the devil in the person of one Pedro Veres, a Mexican, comes to him with an easy opportunity to reestablish himself without either work or a confession, Dick agrees to join him in the enterprise. Verez knows of a fine string of horses which should net the two a good 'round sum and which might be appropriated with little danger. Yet they have not counted on the alertness of the owner who comes upon them and succeeds in capturing Pedro, although Dick gets away. The Mexican is turned over to the sheriff and a warrant is sworn out for the arrest of Dick Graham. It is timely to say here that Betty has for time entertained a young deputy, Dan Morris, by

name, and it is Morris who regretfully receives the warrant and is told to serve it. Duty bound he mounts his horse and rides to the Graham store, but just too late as Dick has confessed to his sister and has begged her to save him. The girl thinks fast and finally in desperation dons a suit of her brother's clothes and while the father has retained the young deputy in the store, has slipped out, and mounted to the saddle. Morris, in the meantime, has informed the storekeeper that he will have young Graham if he must demolish the locked door between the store and the living quarters. Just then Betty, in her brother's clothes rides by the store and is seen by Morris. He, of course, thinks she is Dick and after a scuffle with the old man dashes out of the place, into his saddle and is soon in hot pursuit. Dick joyously listens to the retreating hoofs, then after writing a note of goodby to his father and sister, in which he makes promise to mend his ways, slips from the house, mounts and rides in the opposite direction. Morris follows the supposed Dick and after an exhaustive chase on foot the girl drops faint from sheer fatigue. It is then that Morris discovers the identity of the rider. In his heart he is deeply grateful and as he carries her tenderly back to her horse he thanks Heaven that Dick got away. At the store again the girl accepts Morris upon his proposal, while the latter wins, also the consent of old Graham.—960 feet. Released January 14.

ART AND THE LEGACY.

Lubin

Carl Mayfield and Alice Bennett were artists. That is, they had studios and dabbled with colors on canvas and hoped, some time, to make Rembrandt and Raphael look like "pikers." Carl's father was the head of a big steel mill and Carl could have a job at $5,000 a year any time he gave up painting. The young people took their paintings to a dealer named Fleecum who demanded a commission of 50 per cent on all he sold. But he never sold any and, didn't get rich on their commissions. Then Alice, one day, received $200, a legacy from an aunt. She was just about to rush to Carl's studio with it when she thought of a better plan. She hurried to Fleecum's shop and bought one of Carl's daubs for $200, swearing Fleecum to strict secrecy. In due time Carl received a check for $100, the price of his picture less Fleecum's commission. Of course, he thought he was hot on the trail of Rembrandt and Raphael and was about to hurry to Alice's studio and show her the check. But he reflected that she would be disappointed because none of her paintings had been sold. So he went to Fleecum's and bought one of her pictures for $100 and in due time she received her share, $50. Carl happened to be there when the money came and enjoyed her delight. As soon as she could slip to Flecum's she bought another of Carl's masterpieces for $50 and Carl, of course, received $25 which he immediately invested in one of her pictures. Eventually they discovered each other's subterfuge. By that time the legacy had dwindled to $6.25 which was Carl's share of a painting that Alice had bought for $12.50. At the same time a letter arrived from Carl's father offering him, for the last time, a position at the steel mills at $5,000 a year. Then Carl and Alice woke up and decided to let Rembrandt and Raphael keep their

laurels. Carl wired his acceptance of the position, "Coming tomorrow with my wife." There is an abundance of humor throughout the novel plot of this story and it is a sure winner.—950 feet. Released January 2.

HIS LAST PARADE.

The veteran lies on his bed and he is sick unto death. The family and nurses have left him alone for a moment to see the Grand Army parade which is passing. The martial notes of the fife and drum corps are heard in the distance. As they come nearer they reach the ears of the old soldier. He rouses. The expression of his face changes as he thinks of the happy days that the music recalls to his memory—the days of '61 when he was a young man and marched lightly away with his comrades to the war. He moves, gets out of bed and totters to the window. He stands there a moment, solemnly saluting the Stars and Stripes as they go by. The effort weakens him and he staggers back to bed. But he doesn't lose interest in the parade. Suddenly there is the boom of a cannon fired close at hand. The veteran is unable to resist any longer. He manages to get into his blue uniform and stealthily leaves the house. Next we see the Grand Army parade—hundreds of the boys in blue marching past with the old banners and ensigns, the battle-scarred flags. Here comes the veteran, marching with the rest, bravely trying to keep up in spite of physical weakness. And then, suddenly, he drops. Comrades rush to his assistance. His face is bright with the light of patriotism, but his strength is nearly gone. Gently they assist him home where he is put to bed. And in the midst of his family, surrounded by comrades and covered by the flag he loved so well, he answers his final "taps."—390 feet.

A MIX IN MASKS.

The Thompsons and their daughter, Nellie, had been invited to a masquerade party. The mother and father decided not to go, but had no objection to their daughter going with her friend Jack. Nellie and Jack decided to wear Spanish costumes. Just before starting for the party they came in to say goodbye to Nellie's parents. Now, Mr. Thompson loved a joke and no sooner were the young folks gone than he broached a little plan to his wife whereby they would have some fun. She agreed with great pleasure. In accordance with this plan they ordered duplicates of the young people's costumes. As they were about the same size as Nellie and Jack they were exact pictures of them after they were dressed in the Spanish costumes. So, off they went to the party where they took good care not to be seen by Jack and Nellie. Then, when Nellie was alone for a few moments, her father joined her and, of course, she thought he was Jack. Then Jack met Nellie's mother in another room and, of course, he thought it was Nellie. Jack ventured to steal a kiss, and of course, the supposed Nellie objected. That didn't "go" very well with Jack and he started his part of a lovers' quarrel. Meantime, the real Nellie was rather provoked because the supposed Jack was so cold. She began to suspect that he didn't love her and all that sort of thing. There's no telling what might have happened if the two couples hadn't met—to the mutual astonishment of both Jack and Nellie. They all unmasked, enjoyed a good laugh and the young folks had to admit that the joke was on them. A pretty comedy full of sparkling fun. A plot so woven that it is easy to follow.—600 feet. Released January 5.

TAG DAY AT SILVER GULCH.

When the Rev. John Asher and his pretty daughter, Ruth, arrived at Silver Gulch mining camp they were not greeted very cordially by the miners. The minister's clothing marked him as a "sky-pilot" and that, said the Silver Gulchers, was a kind of person they "didn't have no use for." They preferred to spend their spare time in the First Chance saloon helping to keep the distilleries at work. However, the minister and Ruth were not discouraged. In the course of a few days a tent-church had been set up, but this didn't cause any falling off in attendance at the First Chance saloon. As the congregation didn't come to him, the minister decided to go to the congregation and began holding meetings outside of the saloon. Bill, one of the miners, finally enlisted in the cause,—attracted probably by Ruth. It was determined to build a church. A "tag day" was set aside when all the inhabitants would be solicited to subscribe—each subscriber being decorated with a tag after making his contribution. Hearing this, the miners painted a sign:—"Notice: We ain't goin' to have no church. Buy a tag and git plugged." The Silver Gulchers weren't very swift to contribute because wearing a tag meant about the same as wearing a sign, "Please shoot me." Bill saw Ruth disappointed and downcast. So he bought the first tag, tied it on, pulled out his "shooting irons," walked into the midst of the miners and, before they knew it, had the ringleaders covered with his revolvers. But the minister appeared and put a stop to Bill's plan. Then he took off his coat and proceeded to give Hank, the ringleader, the licking of his life. After this little ceremony Hank showed that he was a true sport. He and Bill sold the tags like hot cakes. If any man felt doubtful whether he needed a tag he was quickly "persuaded" that he just couldn't *live* without one. Of course, Bill became the minister's son-in-law.—935 feet. Released January 9.

THE WIDOW'S CHOICE.

Harold and Jack Manning were rivals for the hand of Mrs. Dorothy Loveland, a handsome widow. John Manning, their father, was an elderly widower who hadn't smiled on a woman for many years. One day, Jack received a letter from his firm telling him to report at the office immediately, prepared for a business trip which would take him from home for at least a month. When Harold heard of these orders, he was naturally elated because Jack's absence would give him a good opportunity to make the final plea for the widow's hand. But his rejoicing didn't last very long, as he soon received a message from the firm ordering him to accompany his brother. Fearing that someone else might win the widow while they were gone, they drew up a contract appointing their father guardian over the widow during their absence. The father was unaware of his trust until he learned it through a letter which he received after his sons had gone. There was nothing he could do but go to see the widow. He looked good to that charming lady and, when father was leaving, she pinned a rose on him. At the same time, the long-absent smile appeared on the widower's face. He called again the next evening, but in the meantime he had visited a tailor and looked at least twenty years younger. Things moved pretty rapidly after that and by the time Harold and Jack returned from their business trip, they found the fair widow was their stepmother. There is as pretty a love-comedy as has ever been produced.—950 feet Released January 12.

Nestor

AT CEDAR RIDGE.

It was nothing but contrariness on her father's part, so Dot declared, which kept him from realizing Ned Sherwood's superiority over Lewis Huntley, who, while not a bad man at heart, constantly spied upon her and told her father every time she and Ned met. The upshot of the matter was that Dan Nelson decided to send his daughter away to school. And it was after Jack had driven off with her for the station that Ned and Dan got into an argument. Hot headedly the older man drew his gun and in the struggle which ensued, accidently discharged it, wounding himself. As Ned bent over the unconscious form, however, he believed that he had killed his employer, and realizing that Dot would have to know, he ran breathlessly through the woods to head her off. Almost overcome with the great misfortune which she believed had fallen upon her, the girl still had presence of mind left to insist upon Ned going into hiding until things should quiet down. And right glad she was of her fore-thought, for, scarcely had Ned left the buggy than a posse of men, headed by Lewis,

who had heard the shots and hurried to the old man's side, hove in sight. Sending them in an opposite direction from which Ned had taken, Dot drove home with all possible speed; where she had the happiness of finding her father a slightly wounded, but very mad man. Knowing it was best for Ned to remain away for a few days, Dot hurried up to the cave with a basket of supplies. In turning quickly, however, to answer Ned's call, the girl fell from the rocks, and the result was a broken leg; so that, much against her will, Ned was forced to carry her home, and brave the old man's wrath. Fortunately for him, Jack had succeeded in convincing Dan and the men that the wound had not been made by Ned's revolver, so that when the young man appeared with Dot, he was eagerly greeted; and while the doctor looked after Dot, Dan expressed his approval of Ned in a manner to cause the young man to beam with happiness.—Released January 4.

SLEEPY HOLLOW.

It's said, "There's no true love without jealousy," yet Henry Taber overstepped the mark in this direction—and, although Tess was the most devoted of wives, Henry saw in every man, upon whom her glance fell, a

possible rival. Jack Wilson, the amateur photographer, attracted by the mountains and beautiful surrounding country, stopped at their cabin for a glass of water; and merely because Tess bid him a pleasant good day. Henry was vexed. Indeed, that evening when Jack again chanced that

way and showed the little wife a few prints of her lovely estate, Henry displayed his displeasure in no uncertain manner; and coax as she would, he refused to come in to supper, but instead sank wearily down on a bench by the door. As he lay there, he beheld his wife come to the door, look cautiously about, and steal softly around the house. Instantly he sprang up and crept after her, following at a safe distance until she came to the Big Rock, where, to his horror, he beheld her clasped in the arms of Jack Wilson. The unhappy husband raised his gun and fired, but it was Tess who dropped. So grasping the photographer by the throat he slowly but surely forced him over the cliff. Turning, he found that Tess had staggered off and from his position on the Rock, he could see her notifying the woodsmen below. Perhaps after all, Jack had been only wounded, but as he climbed down, his worst fears were realized, and he had scarcely time to hide behind the rocks when Tess and the woodsmen appeared. Then commenced a chase up the mountain. At last he reached the top—then, confident that he had eluded them, lay down to rest. Suddenly the woodsmens' heads appeared. Stealthily they crept upon him, while he lay as one petrified, unable to move, hand or foot, until the Sheriff grasped him firmly by the shoulder. But, as Henry started up, he looked into the pleading face of Tess, again imploring him to come to supper, just as Jack Wilson appeared to get the camera he had forgotten. The bewildered man looked around. There stood his cabin—it was only a dream—a horrible dream—gratefully he clasped the little wife in his arms, grasped the photographer's hand, insisting upon his sharing their humble meal. This had been a lesson to him. Never again would the green-eyed monster rule his home. Released January 11.

THE MISPLACED PETTICOAT.

Pathé

Mr. Stingy, is away from home for a day on business, receives an urgent wire from his wife to return at once; she is of a jealous temperament and feels uneasy during his absence. Thereupon Mr. Stingy, smiling at the ingenuousness of the message, packs his bag and prepares to depart. Unlucky for him he refuses to tip the bellboy and the chambermaid, and they having discovered the telegram, stuff a frilly petticoat adorned with a cluster of ribbons into his portmanteau as an act of revenge. The petticoat belongs to a barrister's wife who leaves the hotel (without missing her property), at the same time as Mr. Stingy. The effect caused by the finding of the petticoat by Mrs. Stingy in her husband's bag is all that the two servants could desire, and after two or three hours' hysterics, Mrs. Stingy declares she will have a divorce. Accordingly we next see her consulting a lawyer, who happens to be no other than the husband of the owner of the petticoat, which is produced as evidence by Mrs. Stingy. She is dilating upon her wrongs when the lawyer's wife enters, recognizes the petticoat, and innocent of the compromising effect of her words, claims it as her own. Then and there is another scene; the lawyer between the intervals of tearing his hair de-

mands to be shown Mr. Stingy, and when that gentleman, summoned in haste by his wife, appears to refute the charges against him, some hard words and a few cuffs are exchanged, whilst primitive nature also gains the upper hand in the case of the ladies. However, when the first excitement has somewhat abated, an effort is made to disentangle the imbroglio, and in the end the whole party adjourns to the hotel. Mr. Stingy, who is the most mystified of the four, opens a crossfire of questions upon the bellboy right in the middle of the vestibule. The bellboy, however, stubbornly refuses to open his mouth until his palm has been well greased, and although it is a hard blow to Mr. Stingy, he is obliged to disburse. Even then he is not to learn the truth, for the bellboy carrying his secret with him, suddenly bolts. Fortunately, however, for Mr. Stingy's mental balance, the chambermaid is seen passing through the vestibule; she is immediately stopped in her passage and less cruel than her fellow servant, she retails the whole story and the motive of the revenge. The bellboy is badly punished for his part in it by his indignant victims, and he is also sacked by the hotel manager, but all the same Mr. Stingy makes a mental resolve never to omit to tip in the future.—790 feet.

DUTCH KIDS.

Marken boys and girls clattering across bridges in their wooden sabots, or studying their lessons on their way to school in slow moving barges, is one vivid impression. Then we have babies in their cradles or in little wooden chairs on wheels; also Volendam girls in pretty point caps and precocious boys smoking long Dutch cigars on the quay. Charming views, too, are those of scenes at a juvenile fete, and the smiling infantile faces, the waving pennants, and the mass of muslin bonnets like a field of white fragile flowers, form a thoroughly enjoyable and goodly sight. The boys, too, win our hearts with their dabbling in the water, and the ingenious way in which they will rig up a sail on their sabots to make serviceable and seaworthy toy boats. Zeeland children next figure on the screen. Dancing, playing, or smiling shyly at the cinematographer, they pass in review before our eyes—a happy crowd, fresh and pleasant to look upon.—197 feet. Released January 2.

THE COWBOY'S INNOCENCE.

Gertie, just returned from the east, receives an invitation from her uncle Jack to come up to the ranch. The cowboys give her and her friends a right royal welcome. Most exciting scenes are witnessed when some of the cowboys try to ride a savage steer. Gertrude's sweetheart Bob is one of the boys and later in the day a Mexican rival, having first inserted some cards in one of Bob's top boots, makes it appear that Bob is cheating. Dismissed, Bob rides to the Old Cactus Road. An Indian girl runs up and tells how she saw the cards were placed on him by the Mexican. He writes a note to Gertie and asks her to come to him. The Mexican, however, intercepts the Indian with the note and she is bound and left. Altering the note as to the place of meeting, one of the Mexican's friends takes it and delivers it to Gertie. She falls into the trap and

finds only the Mexican awaiting her. He attempts to make love to her, but she spurns him. Meantime, the Indian girl, having bitten through the ropes that held her captive, has run and informed the other boys. They start in pursuit, while she dashes off to Bob and tells him her story. Bob arrives at the spot first, in time to grapple with the Mexican and, after a struggle, both fall over the cliff, but manage to hang on to a ledge. The cowboys then, after a great ride through typical western country, come up. They throw a lasso under Bob's arm and draw him up, while the Mexican, in the effort, falls to the bottom of the cliff. Returning home to Uncle Jack's ranch all is explained by the Indian girl and the picture ends with a pretty view of Bob and Gertie on their honeymoon.—1,000 feet. Released January 4.

AN INTRIGUE.

La Savelli is an Italian gypsy girl, whose father had joined the insurgents in the south of France against the emperor some years previously. He was taken prisoner and condemned to be shot by the orders of Favier, the procurator; the bullets, however, failed to do their work the first time, and, by the procurator's orders, Savelli, bleeding from his many wounds, was dragged before his executioners to be shot a second time. At the time the play opens, his daughter, left to earn her living by singing in the streets, holds both the emperor and the procurator in deep hatred, and when she meets Count de Romagna, an Italian who also hates the emperor and France, she offers to help him in his schemes of revenge upon Napoleon III. Romagna agrees, and, by his influence, La Savelli is admitted to the highest ranks of society, and is even favored with an invitation to a ball at the Tuileries, where she meets the emperor and Jean Favier, the son of the procurator. Romagna's project is that La Savelli shall, by her beauty and wit, cause both Napoleon and Favier to fall in love with her; that the jealousy of the younger man shall then be excited by a knowledge of the fact that he has a rival, and that he shall be trapped into seeing La Savelli and the emperor together without the latter's identity being disclosed to him; Romagna foresees that Favier will then kill his rival in his fierce rage, and that thereby, his own arrest and death will follow, a blow which will recoil with double force upon the now aged procurator. La Savelli does her part, but caught in the meshes of her own toils, she falls in love with Jean Favier, and when Romagna calls upon her to play the final act in the tragedy, she refuses. Romagna persuades and threatens, then he finally invokes the memory of her dead father, and this last diplomatic stroke wins his cause; La Savelli, in a sudden revolt, agrees to all his plans. Scarcely has he left, however, than she is overwhelmed with remorse, and writes a note to Favier begging him not to keep his appointment with her on the morrow, and explaining the details of the whole plot. Unhappily, this note is intercepted by Romagna who, fearful of treachery, has not left the grounds of La Savelli's villa. He substitutes another, informing Jean Favier that La Savelli is playing him false. On receipt of this letter Favier, mad with rage, hastens to La Savelli's villa. He is surprised to see a couple of gentlemen pacing slowly up and down the gravel path. However, he slips into the villa unseen, and finds La Savelli listening to the flattery and love speeches of a tall man who has his back turned to him. In the semi-obscurity, Favier can see little but outlines, but he listens, and suddenly unable to contain himself, he fires at the tall figure. His bullet never reaches its mark, for it lodges in the heart of La Savelli, who, in making a sudden turn, has fallen in the line of fire. At the sound of the shot, the members of the emperor's suite on the watch outside, rush in through the glass doors and arrest Favier who realizes the truth of the matter, and that his doom is sealed, as the light falls upon the emperor's face bending over the dead woman.—1,000 feet. Released January 6.

LOVE UNDER DIFFICULTIES.

Young Harry Edgely sees one day that the large mansion next door has been let. An elderly gentleman and his daughter are seen moving in. Peeping through a hole in the wall in the garden he gets a view of the daughter and is struck with her beauty. Climbing the wall, he attracts her attention by throwing a flower at her feet, and she climbs up

and joins him. The girl's father interfers with their love making, and shows them a portion of his will by which he has left his fortune to his daughter only, provided that she does not marry until she is twenty-one. Harry and Patsy are not to be discouraged, and on every occasion manage to spend their time together, although frequently they have their troubles. Finally, Harry takes Patsy to the minister's and they get spliced. Returning to her father's house, they are afraid to tell him of their marriage, and he, not noticing their confusion, invites Harry to stay to dinner. They enter the dining-room and, the light being turned up, Harry finds his father is also there, and that the two fathers knew exactly all that had taken place. The girl's father also shows them his will, which provided that, in the event of his daughter marrying a man who loved her only for herself, his fortune was still to go to her.—745 feet.

THE FUNERAL OF COUNT TOLSTOI.

In accordance with his request, this great man was buried in the middle of a forest in Russia.—230 feet. Released January 7.

Solax

THE NIGHTCAP.

Hank, after a hard day, gets ready for bed. Once in bed he finds it impossible to sleep. He gets up, and putting on his nightcap, and bringing a newspaper and night lamp to his bedside, prepares for a good long read. He soon wearies of reading and drops off to sleep. His head droops lower and lower, and finally the tassel of his nightcap comes in contact with the night lamp by his bedside. The tassel becomes ignited. Hank, after a short period, is awakened by a violent fit of sneezing—he smells smoke, and thoroughly frightened, turns in a fire alarm. Then we have a realistic picture of the fire department in full action—the engines leaving the fire house—the thrilling race to the scene of the fire, and the fire apparatus in active operation. The firemen, unable to find the fire, rush from room to room until the house is a complete wreck, windows broken, ceilings down and the whole place in a state of general delapidation. Finally one of the firemen spies Hank with his flaming nightcap, and suspecting that he is the cause of all the trouble, rush him to the front of the house, where they proceed to "put the fire out." The poor fellow is nearly drowned.

SALMON FISHING IN CANADA.

This interesting and instructive scenic production of salmon fishing shows many beautiful scenes of forest and stream. The canoes shooting the rapids with lightning-like velocity—the fish jumping the cascades—the skillful handling of the trawl and line by the fishermen, and quick and bewildering succession of scenes of primeval nature, all combine to make this picture one that will be greatly appreciated by the city audiences. —Released January 6.

THE GIRL AND THE BURGLAR.

Bert King, a successful young business man, is visiting the family of his fiancee who lives in the country. Just before his deparutre for the city he takes his sweetheart for a sleighride during which, a necklace which Ruth has been wearing falls from her neck and is broken. She asks Bert to take it to the city and have it repaired. This he does. As he sits admiring the clever manner in which the jeweler has completed the task assigned to him, he hears footsteps in the adjoining room, and slipping the necklace into a pocket of his smoking jacket, he takes his revolver and stepping into the next room he finds, as he had supposed, a burglar in active operation. The burglar proves to be none other than Gentleman Jack, a noted society crook, whom the police have been trying to apprehend for some time. Bert covers Gentleman Jack with his revolver while he telephones for the police, but by the carelessness of Bert, Gentleman Jack succeeds in getting home a knock-out blow, which renders Bert unconscious. The clever and sharp witted burglar, realizing the chance to again outwit his old-time enemy, the police, leads them to believe, upon their arrival, that Bert is the burglar. Before the police arrive, however, Gentleman Jack has had ample opportunity to go through Bert's clothes, and he, of course, finds the necklace. In the meantime, Ruth, having heard nothing from Bert is lead to believe him untrue. She accepts the invitation of a friend to spend a few days in the city, and while there she meets Gentleman Jack, posing as a society swell. He becomes smitten with the girl's youthful beauty, and determines to win her love. Finally he presents her with a beautiful necklace, which she at once recognizes as being the one given her by Bert. She acquiants her friend with the situation and they appeal to the Inspector of Police for an explanation of the problem. As a result of this the mystery is unraveled. Bert, languishing in a prison cell, his identity a mystery to the police, is restored to the loving arms of his sweetheart. and Gentleman Jack, the trickster and deceiver of men, meets his just deserts—a prison cell.—Released January 13.

Vitagraph

ALL IS FAIR IN LOVE AND WAR.

Two maiden ladies, sisters, keep a private school and have troubles of their own in teaching the young ideas how to shoot. Mattie, an orphan niece of theirs, is full of mischief and comes under the especial notice and correction of Letitia, the younger of the school "marms," who has an evident grudge against her young niece. Mattie makes up her mind to get even with her horrid aunt for the chastisement she has suffered and communicates her intention to her young playmate and beau, Johnny. They put their heads together and interest Mattie's cousin and his young wife in their plan and with their assistance write two letters, one to Letitia in the name of a spruce old bachelor who is very much smitten by her, and another letter over the name of Letitia to the old "Bach," for whom the school teacher has a sneaking regard; these letters ask for a meeting and make an appointment at different places for the tryst. Here comes Miss Letitia all dressed in her best to meet her gay old admirer—"at the arch," that's what the letter said. He is not there; she waits and waits. Rain begins to fall and then pour. She can wait no longer. "She won't! He is a base deceiver." Let him dare place himself in her way and she will "cut him dead," these are the thoughts running through her mind. While she is impatiently waiting, he is doing likewise in the grove. The rain dampens his ardor and penetrates his rheumatic joints until he is obliged to flee in a dreadfully disturbed and disappointed condition of mind. Mattie now beholds her revenge and we do, too, when we see Letitia sick in bed with a heavy cold and the old beau soaking his feet and imbibing a hot draught. She reports the success of their trick to Johnny, and he is as pleased as she is. The plot thickens. Here comes Letitia from one direction and the old masher from the opposite direction. They meet, look daggers at each other and never speak as they pass by. Mattie and Johnny perform a war dance as they laugh and shout "Revenge!"—973 feet. Released January 3.

THE MISSES FINCH AND THEIR NEPHEW, BILLY.

Four Finches, listen to their names and count them—Priscella, Prudence, Patricia and Patience—old maids, every one, old enough to know better, but they just can't help it. They live alone, there's an obvious reason, and invite no foreign interference. They have a brother, Ned, who has a bright and active son whom he decides to send to his sisters for a two weeks' visit. He comes and he makes things lively for his four fussy old aunts. He puts vinegar in their tea, prods them with a pin at the table and keeps them guessing all the time. They are funny, finicky freaks of femininity that furnish a heap of fun and amusement for their nephew and everyone who sees them. The maidenly quartette take Billy out for a quiet row and he conspires with the jolly old tar at the oars to rock the boat and give the "girls" a scare. They are panic-stricken, overturn the boat and are soon floundering and sputtering about in the water. They are rescued by a crew from a motor boat laying nearby, taken on board, comfortably tucked in the berths and served with hot broth while their clothes are hung on the yacht's railing to dry. Billy gets into a man's size suit of clothes, sees the belongings of his aunts, and dumps them overboard. The ladies are in a pretty mess. It is getting dark and they are obliged to put on male clothing and go home in coats and trousers like a masquerade party. Hold your sides and let her titter. the shapes, forms, figures of these four animated racks are enough to convulse a statue into fits of laughter.—979 feet. Released January 6.

THE OLD WATER JAR.

Pau Puk, an old Indian, views with pride his handiwork on the old water jar, recording some of the striking events of his past life, and these afford him his only diversion, for he is shunned by his people, even the little children avoid him and his heart seems to be embittered against all mankind. While studying the pictures on the jar he suddenly realizes that he is a had Indian, and as he beholds each picture and the scene is re-enacted in his own mind, his conscience troubles him and he tries to shut out the visions from his mind's eye. First he beholds himself gambling with a fellow brave with whom he duels and kills. The next picture he sees himself playing false to an Indian maiden. He looks upon the third picture where he scalps a helpless soldier, then he glances at himself killing an innocent child in the attack on a family of pioneer immigrants. In terror he tries to flee from the consciousness of this horrible deed, covers the old water jar with his blanket and penitently prays to the great Spirit for forgiveness and feels the tender influence of the divine breath of pardon. Filled with inspiration he takes up the old water jar and paints in the last panel, a picture of the sacred guardian of the soul. Reverently and admiringly he gazes intently on this, his final record and his masterpiece. Weak in body, strong in spirit and purified in soul, he rises in attitude of supplication, but falls dying into the arms of a brother, surrounded by his people. He smilingly beholds a vision of the Great Spirit beckoning him to the "happy hunting grounds."—984 feet. Released January 7.

DOCTOR CUPID.

Love! What a wonderful thing is love. Cupid is a specialist in aching hearts and for sick men and maidens. Alice Linton falls in love with Percy Primrose, a young poet. Papa Linton says: "Cut out the poetry and keep the muse out of the family." He will not father-in-law a sentimental versifyer. Alice is deeply smitten with Percy and she cannot be comforted, falls into a decline and looks very ill. Her father is anxious about her and hastens to see the family physician. Percy consults the doctor in advance of the father, however, and tells him all about Alice's trouble and his love for her. The old doctor is a friend of the young people and arranges to help them. When the father calls, the doctor feigns sickness and sends Percy, disguised as "Doctor Cupid," to attend the young lady's case. Dr. Cupid comes to see Alice and after making himself known she immediately begins to improve. "Marvelous!" cries her father. Dr. Cupid calls the next day and Mr. Linton notices the doctor and his daughter are very fond of each other. The climax comes when Dr. Cupid asks Mr. Linton for his daughter and gains his consent to their marriage, then removes his wig and reveals himself—Percy Primrose, the poet. The deed is done, papa cannot go back on his word and Percy wins Alice as his inspiration and poetry of life.—987 feet. Released January 10.

WATER-LILIES.

Albertina is filled with the rhythm and poetry of grace and motion. She is a celebrated dancer whose fame is widespread. She has overtaxed her strength, is forbidden to appear in public and is obliged to seek quiet and rest. She retires to her Aunt Mary's home, a beautiful and restful country place, where she secures the much needed seclusion and comfort. Next door to Aunt Mary there lives a very handsome fellow who has often admired Aunt Mary's niece and to tell the truth she admires him. Growing restless under the enforced retirement Albertina strolls down toward the lake where the water lilies grow. She pulls a number of the delicate flowers from the water and entwines them into a garland which she holds bewitchingly above her head. They give her an inspiration and involuntarily she pirouettes, bends and swerves her lithe and willowly form like a nymph of ethereal sweetness. The young man who lives next door is rowing upon the lake; he sees Albertina dancing on the velvety field of grass, is charmed by her and rushes toward her. She trips lightly away from him, like a thistle-down wafted by some gentle zephyr. Following, he takes her in his arms and from that moment they are held by Cupid's bonds. Fates are sometimes kind and sometimes harsh; in this instance fate has decreed that Maurice suffer blindness from a lightning stroke which flashes into his eyes as he stands enchanted, gazing out of the window at a gathering storm. Albertina hears of his affliction, and declares her undying love for him. But he will not have her engage herself to him, blind and helpless, and sacrifice her life for his, so he sacrifices his happiness by declaring that he does not love her. Broken hearted she returns to the city and again takes up her public career as an exponent of Terpsichore and Del Sarte, gaining fresh laurels and making new triumphs; these divert but do not lessen her love for Maurice. After one of her exhibitions, a child

presents her with a bunch of water lilies; her heart leaps within her and she resolves to return to her blind lover. She goes back to her Aunt Mary's, asks first for Maurice, then wanders down to where the water lilies will remind her of sweet memories of the past. There she finds him groping his way to the symbols of her constancy and love. She glides toward him, he hears her voice and they walk into each other's outstretched arms.—991 feet. Released January 13.

COWARD OR HERO.

Just a couple of kids, chums at school and friends at play. Ned is a delicate, timid child; the rest of the boys regard him as a coward, afraid of his own shadow, but he has a staunch champion and comrade in his sturdy little friend, Jack, who always stands up for him and beats the other chaps off whenever they try to bully Ned, which is quite often. Ned and Jack grow up together and while Ned grows to be a husky young fellow he has not lost that shrinking disposition he evinced when a boy. The result is that Jack always wins out wherever aggressiveness is needed; even at love Jack is the victor in the conquest for Mary's heart. Ned is offered a job in the coal mines; he is fearful of working in the depths of the earth and refuses to take it. Jack comes along and accepts it without hesitation and Ned is obliged to seek employment in the less hazardous occupation of gardner. An explosion occurs at the mines and Jack is hemmed in the tunnel. The whole town is in a fever of excitement. Who will save Jack? Some volunteer, but hesitate at the mouth of the shaft; others are dissuaded by the pleadings of wives and children not to risk their lives. Ned is told of Jack's peril and rushes to the scene of the disaster, goes forward, declares his willingness to rescue his friend. Mary grasps his hand and tries to thank him. Ned pats her head and says, "For his sake and yours, I will save him." Ned is lowered into the mine and finds his companion injured and helpless, ties the hoisting rope about his body and soon he is lifted out of the tunnel and drawn to safety. Another explosion occurs in the mine and Ned finds himself imprisoned in the dark passageway, a victim to the gradual rise of the water which is flooding the mine.—975 feet. Released January 14.

Among the Picture Theaters

ROLL OF THE STATES.

ALABAMA.

The old Montgomery theater of Montgomery will be opened as a picture house under the management of H. C. Fourton.

ARKANSAS.

The Unique theater is the name of a new picture house opened on De Queen street, Mena, by Miss Eleanor Brooke.

CALIFORNIA.

Dreamland is the name chosen from the list of names sent in by the various contestants seeking the prizes offered by Manager Stevenson for a name for his new theater, recently opened at Modesto. Only the best in moving pictures will be exhibited and the house will also be equipped with a first class orchestra.

The Photo theater was recently opened at 941 Market street, San Francisco, by Messrs. Turner and Dahnkinn. The entire receipts for the opening day were given to the fund being raised to rebuild the Mount St. Joseph orphan asylum, which was recently burned. The proprietors are among the largest concerns in the movng picture business on the coast, which assures an unusual degree of excellence for the new theater.

COLORADO.

A new moving picture theater will be opened in Florence by Arlington W. Howell, who also has the management of the Dreamland and Maze theaters of Pueblo, after which the new theater will be patterned.

CALIFORNIA.

F. H. Dahl will erect a moving picture theater on Shattuck avenue, near Center street, Oakland, which will have a seating capacity of 250.

The Premium Theater Company, Inc., will erect a vaudeville and moving picture theater on the west side of Fillmore street, between Geary and O'Farrell, San Francisco.

The Photo-Play Theater Company, of Pueblo, has been incorporated to conduct picture theaters in that city and other towns. The incorporators are H. Lloyd Kent, Oliver T. Curtis and B. D. Reeve.

CONNECTICUT.

The Scenic is the name of a handsome new moving picture theater recently opened to the public in Waterbury.

FLORIDA.

A first-class vaudeville and picture theater will be erected on Florida avenue and Cass street, Tampa.

The Mirror is a new picture house which has been opened at 311 Main street, Jacksonville, Fla., admission 10 cents.

The Seminole Film Supply Company has been incorporated at Jacksonville with a capital stock of $15,000. The officers of the company are as follows: President, W. K. Halle, Jacksonville; vice-president, H. J. Palmer, Norfolk, Va.; treasurer and manager, R. E. Boswell, Jacksonville; secretary, A. G. Martin, Jacksonville.

IDAHO.

T. H. Moore is planning to erect a moving picture theater at Ontario, Idaho.

ILLINOIS.

Harry Sterling has purchased the motion picture theater at Plano from Mrs. Mary Woods.

The new Ward Five-Cent theater has been opened on State street, Joliet.

S. B. Roach will open a motion picture theater in Kankakee.

The Palace theater, 23 South Broadway, Aurora, formerly operated by Frank Thielen, well known in moving picture circles, has been purchased by W. H. Marple, Wichita, Kan., a promoter of motion picture theaters in Illinois and Iowa. The consideration, which includes the lease on the building and all of the furnishings, was $9,000. The new owner has taken possession and for a short time will manage the theater himself, but owing to the fact that he has four other houses he will place another in charge after he has thoroughly acquainted himself with conditions. Mr. Thielen will retire from the motion picture business and in future will devote his efforts to vaudeville He still has two other motion picture houses which it is stated he will dispose of.

The Moving Picture and Projectng Machine Operators' Protective Union, Local 145, of the International Alliance of Theatrical Stage Employes of the United States and Canada has been incorporated at Chicago for the purpose of promoting the interest of theatrical employes. The incorporators are Edward Porter Smith, Percy C. Moore and William Schreider.

T. O. Thomas of Mt. Carmel recently opened a handsome new moving picture theater at 402 Main street, that city, which has a seating capacity of 300. Mr. Thomas will use independent films only and the admission price will be five cents throughout.

Charles Derr, formerly operator at the Star theater, Dixon, will open up a theater in the Moss building. Mr. Derr is backed by prominent citizens. The theater will be devoted to pictures exclusively, and only the best and latest films will be used.

The Dreamland of Farmington has been purchased by a Mr. McFarland of Keithsburg, who also conducts a moving picture theater in that place, as well as several other towns.

The Mirror is the name of a handsome and comfortable moving picture theater which has just been opened in Moline by Messrs. L. K. Cleveland, W. J. Talty and T. I. Stanley. The new theater is equipped with a morror screen, the first in the city, and patrons were very much pleased with the effect as it shows the pictures with a marked degree of clearness.

Moline will also have another new moving picture theater which will be conducted at 513 Fifteenth street by George Mills.

E. P. Milburn has taken over the moving picture theater located at the head of Main street, Marseilles, and hereafter the same will be known as Ruby Place.

A new moving picture theater, known as the Colonial theater, has been opened between Eighteenth and Nineteenth streets, Rock Island.

The Dreamland of Galena was reopened recently under the new management of Messrs. Kramer and Calvert. The Dreamland includes moving pictures in its program, also vaudeville, along with other attractions.

The Lyric theater of Streator has been purchased by G. C. Callerman, of Chicago, who is interested in several moving picture theaters in the latter city, among them being the Lincoln theater, 1214 North Clark street, and the Humboldt, which has a seating capacity of 1,200 and claims to be the largest five-cent theater in Chicago.

INDIANA.

The Central Film Service of Indianapolis has been chartered with capital stock of $10,000.

The moving picture business at the Kidd theater, Princeton, has been taken over by W. H. Hornbrook.

Jack Meehan will build a nickel theater at Gary; date of opening, January 1.

In a few days work will be started on the new Schutz

theater building on East State street, Hammond, which is to be constructed at a cost of at least $60,000 by Mr. and Mrs. Peter Schutz.

"The Oriental" will be the name of a vaudeville theater to be erected at the southeast corner of Meridian and Wilkins streets, Indianapolis, by Louis E. Burkhart.

The Gem Parlor theater is the name of a new moving picture theater to open at Goshen. Harry Waterman is the owner.

D. D. Larue has opened a picture show in Mongo.

The New Castle Theater Co., of New Castle, has been incorporated with a capital stock of $10,000 to operate amusement places. The incorporators are Chas. E. Harmon, Edward Arganbright and Dolph Wellinger.

The Colonial is the name of a new moving picture theater recently opened at 105 East National avenue, Brazil.

The Crystal Moving Picture Company of Connersville has leased a building in that city, which will be converted into a moving picture house.

Frank Shafer, manager of the Crystal theater, of Logansport, will open a new picture house in the Elliott building on Third street in the very near future. No name has been selected for the new house, but it is proposed to hold a voting contest to decide upon a name. The Crystal theater will run stock companies and the new house will be devoted to high class vaudeville and moving pictures. Both will be under the management of Mr. Shafer.

IOWA.

Messrs. Miedke and Woodyatt have opened their new $5,000 theater, called the Lyric, at Davenport.

Will Dunlevy has bought out the interest of Forest Wolfe in the moving picture theater at Lansing.

The Gem theater management, at Creston, has leased the building which was formerly occupied by the Comet theater and they will move into the new quarters January 1st or possibly before.

E. Ferguson and Company have rented the Hawley opera house at Clarinda and will open a high class picture show.

O. E. Dunn will erect a two-story brick theater building, costing $7,000, at Sioux City.

The moving picture show at Stuart has changed hands again, Hand and Pierce, present proprietors, having sold to a Mr. Haven of Greenfield, who took possession December 12.

The Moving Picture theater formerly conducted by Messrs. Peck and Rogers, of Denison, has been purchased by Messrs. John Krauth and Jake Hayes. It has been operated under the name of the "It" Moving Picture theater, but the new owners will change the name to the Dreamland. Both are enterprising young men and will doubtless make a success of the new undertaking.

The Pastime theater of Maquoketa, formerly owned by J. G. Roberts, has been purchased by Peter Broderson and Chris Werner.

L. J. Hopper of Colfax has purchased the Majestic theater of that city, which he has greatly improved, including the installation of new opera seats, and will conduct the same as a ten-cent moving picture theater

Farmington is to have a new moving picture house. E. Kuse, an experienced man in the business, will open one in the Stirling building.

The Gem theater of Creston, which has been under the management of Messrs. Lloyd and Hopper, has been purchased by the Creston Amusement Company of that city.

G. A. Piatt, of Malvern, has purchased the Malvern Electric theater formerly owned by E. C. Graves, who will continue to operate the house in a clean, up-to-date manner.

The old Parker Opera house, of Mason City, has been remodeled, the name changed to the Unique, and will be operated as a moving picture house under the management of George L. Williams.

The Dreamland theater, Davis, has been rebuilt and fitted up with a stage for vaudeville, in addition to pictures.

D. M. Allison and son have opened a moving picture theater at McCausland.

Charles Berkell, manager of the American theater at Davenport, will open another house at 426 Brady street, that city. The building will be completely remodeled, an Oriental front will be added and the whole will be brilliantly lighted. Manager Berkell announces that he will offer each day 3,000 feet of moving pictures, the program to be changed every day and the entertainment to be continuous afternoon and evening. The house will be conducted on a high standard. Johnny Philliber will have the management of the house.

KENTUCKY.

The West Broadway Theater Company will erect at 1736 West Broadway, Louisville, a motion picture show costing $12,000.

The Swito building at 314 West Market street, Louisville, will be remodeled and converted into a moving picture theater at a cost of $3,000.

MARYLAND.

The Eureka Amusement Company will erect at 1433 West Lafayette avenue, Baltimore, a $20,000 motion picture theater.

The plans for the new Empire theater structure to be erected on the south side of Fayette street, Baltimore, have been completed.

MASSACHUSETTS.

A theater building of brick and steel construction is to be erected for Blanchard Brothers on Elm street, Southbridge, near Boston.

MICHIGAN.

C. Howard Crane will erect on Monroe street, Detroit, a three-story brick theater costing $75,000. Nearby, on the same street, King and Meisner will erect a theater costing $40,000

M. D. Silvey will soon open a motion picture place at Hubbell, near Lake Linden.

G. M. Woodruff will discontinue one of his motion picture theaters in Eaton Rapids.

J. S. Chisholm has leased the former Star theater at Manistique and will operate a picture show, after remodeling the building.

Charles J. Murphy is now sole proprietor of the Family theater, at Port Huron, having purchased the interest of his former partner, Thomas Major.

G. W. Girdlestone, representing the National Theater Company, has closed a lease for the two lots fronting State street, Hastings, and the company will build a cement theater building thereon.

Architects are preparing the plans for a new vaudeville and moving picture theater to be erected for William Klatt on Grand River avenue, Detroit. It will be three stories high.

Laurium has a new moving picture house. It is known as the People's theater, and was opened on December 1. The seating capacity is 580.

A moving picture theater will be erected on Quincy street, Hancock, by W. H. Mason.

MINNESOTA.

The Gem moving picure theater, at Pipestone, has changed hands, J. F. Kaupp, of Aberdeen, having purchased it. It will be conducted by George Kaupp, a brother of the proprietor.

The new moving picture and vaudeville house at Red Wing, under the management of R. N. and H. Davenport, opened for business in November. This city now has four amusement houses.

E. S. Douglas has remodeled a store at Anoka and will run a motion picture entertainment.

The New Broadway theater, in Lawrence, will be devoted to vaudeville and pictures.

The Unique is the name of a new moving picture theater recently opened at Anoka. The films shown are the best to be had and the management spares no pains or expense to make it a complete success.

The Oriental is the name chosen by Messrs. Frank Carlson and James Yates for the new moving picture theater recently opened by them at Aitkin. The new house occupies the former home of the Aitken theater.

MISSOURI.

Joseph Fisher will erect at 3227 Troost avenue, Kansas City, a theater costing $22,000.

The new Washington theater, at Granite City, opened its doors December 5. A. S. Dodge is manager and J. S. Reintges owner. The building seats 900, and cost $25,000.

The O. T. Crawford Company has purchased a lot in the vicinity of Fifteenth street and St. Louis avenue, St. Louis, and will shortly erect another fireproof re-enforced concrete theater building. It will be a combination vaudeville and moving picture theater.

Koplar Brothers have purchased a lot at 2710 North Fifteenth street, St. Louis, and will erect a two-story motion picture theater.

The new Princess theater at Springfield opened about December 1.

MISSISSIPPI.

Samuel J. Stein contemplates erection of theater at Greenville; seating capacity, 1,000 to 1,200; cost, $25,000.

A. K. Ware of Medford, Ore., has completed arrangements for the opening of the Ware Auditorium, at Northfield. The new manager will be S. N. Swisher.

The Cozy Electric theater has been opened at Cleveland by L. N. Hunter, formerly of Peoria, Ill.

NEBRASKA.

Clark and Eddy will soon open a motion picture show at Dewitt.

The Lyric theater, at Beatrice, which has been conducted by Mrs. Righter, has been sold to J. W. Glenn of Fremont.

Messrs. Riley and Weygent have opened the Elite Electric theater at Nehigh.

NEW JERSEY.

Plans are under way for the erection of a first class opera house in Irving street, Rahway. Mr. Ritter, the owner, has under his control the large Empire theater in Red Bank. The building will seat 1,200, and will cost in the neighborhood of $8,000.

Plans are under way for the erection of an opera house in Irving street, Rahway, on the plot adjoining the Auditorium, which has just been purchased by C. H. Ritter of Red Bank.

Samuel Dressler is planning to open a picture show at Spring Dell and Sylvan streets, Hoboken.

NEW YORK.

Richmond Hill will soon have a handsome and commodious theater. The building will be of brick, and cost about $40,000. J. A. Hassell of 62 Chestnut street is the principal in the enterprise.

H. P. Knauss, 855 Tonawanda, Buffalo, will erect a motion picture theater to cost $2,500.

A motion picture theater to cost about $6,000 is to be built in the near future on Mary street, a short distance east of Third avenue, Utica. It will be called the Columbus theater and will have a seating capacity of about 650 persons.

A two-story building will be erected by George W. Brewster at Washington avenue and One Hundred and Seventieth street, New York, for the exhibition of moving pictures

OHIO.

The new vaudeville theater, under construction by Berger and Doyle, on Main street, Lima, is now being rapidly pushed to completion.

Mrs. Sarah Coffman, owner of the Dresden Theatorium, has purchased the moving picture show at Frazeysburg, and will conduct that theater in conjunction with her Dresden and Conesville show houses.

Architect Bryan is getting plans ready for a moving picture theater in West Broad street, near Martin avenue, Columbus, for Al Taylor. The building will cost about $9,000.

The new Russell motion picture theater, in the old M. E. Church building at Ironton, opened November 12, and was well attended.

Suit for $5,000 damages for alleged assault was filed in the common pleas court November 12 by Michael Daly for his son, Edward Daly, against the Norwood Amusement Company, of Cincinnati, and Arthur Dinklestead, its manager. It is charged that on October 17 last Dinklestead ejected the boy from the nickel theater, refusing to return him his admission fee, and striking and beating him.

What is claimed will be the largest moving picture theater in Cleveland is to be built on the north side of Euclid avenue, just east of East Eighty-third street. It is to seat 1,200 or 1,500 people and will be fire proof throughout.

Walter Hamitch, manager of the Princess and Bijou, has obtained control of the new Luxor theater on East Federal street, Youngstown.

Two moving picture theaters are being erected by Baird and Saurbrey, architects, of Cleveland. One is for the Madison Avenue Amusement Company on West Madison avenue, near West Ninety-sixth street. It will seat 300 people. The other showhouse is for the Glenside Amusement Company and is on Woodland avenue, near Buckeye road.

F. V. Fender has leased the Diehl building at Continental, and fitted it for an up-to-date moving picture show.

The Exhibitors' League of Ohio will meet at the Chittenden Hotel at Columbus on December 5. A large gathering of Ohio exhibitors is expected, as well as many from other states.

The Motion Film Company, a new corporation, has taken over the Southern Film Exchange, of 17 Opera place, Cincinnati. It is capitalized at $100,000, with $25,000 preferred and $75,000 common stock. The officers are: A. R. Thomas, recently with the Southern Exchange Film Company, president; Edward Bernardi, secretary, and Dr. Brooks F. Beebe, treasurer. These, with H. J. Harker and C. J. Kyle, will form the board of directors. The company plans to buy the full output of the independent film manufacturers, and will handle fourteen new reels a week.

PENNSYLVANIA.

The Fulton theater on West Main street, Johnstown, which has been conducted for the past year by Mr. and Mrs. D. Armstrong, was sold to Fred Sperber and Charles Hillary of Gloversville.

For the purpose of leasing or building and operating a number of theaters in Pittsburg and towns along the Monongahela Valley a corporation to be known as the National Theaters Corporation has been formed and a charter has been asked for in this state. The object of the company is to operate high class theaters in Pittsburg, Charleroi, Monongahela, and Monessen, Edwin DeLonge and Company of Chicago, Ill., is backing the project.

The property at 1205 North Third street, Harrisburg, has been leased by Isaac Marcus, proprietor of the Empire theater, who will conduct a moving picture and vaudeville show, dance hall and apartment house there.

Wilkinsburg is soon to have a modern vaudeville theater as the outcome of the purchase by Richard A. Rowland of the Anna B. Weinman property, on Wood street. Mr. Rowland is having plans made of a fireproof theater that is to cost $60,000.

Workmen are making rapid progress on another of Shamokin's new moving picture theaters and expect to have the place ready for business December 1.

The Reading Amusement Company, of Reading, has been incorporated for $5,000. This company has taken the lease of the Hippodrome for pictures and vaudeville.

SOUTH DAKOTA.

C. W. Gates and J. C. Jamison, who remodeled the old St. James Café into a motion picture theater, opened their doors November 14. The house seats 350 people.

UTAH.

Work is progressing rapidly on the new photoplay theater at Salt Lake City, to be known as the Liberty. The management will be in the hands of C. W. Midgley of the Casino theater on First South street. The Liberty building is 44 by 180 feet, and the cost, exclusive of the furnishings, will be about $20,000. The theater will be ready to open about February 1.

The Luna and Isis motion picture houses, at Salt Lake City, which have been so long controlled by Max Florence, have been sold to John B. Ashton of Provo, Fred Ball of the Rosenberg company of Salt Lake, and O. E. Embry of Pocatello, and these gentlemen are now in possession. The Shubert and the Elite will be retained by Mr. Florence.

VIRGINIA.

The new opera house and dance hall being erected by Ed Peter, at Fredericksburg, is being rushed to completion.

A thirty-thousand-dollar picture and vaudeville house will be erected in Broad street, between Jefferson and Adams, Richmond. It will seat 900 persons.

WASHINGTON.

Ed Erickson is opening a new moving picture show in Pasco. The theater is located on First street, and has a seating capacity of about 275 people.

WISCONSIN.

J. J. Morris will erect on Howell avenue, near Lincoln, Milwaukee, a theater to cost $5,000.

Bartmann and Pretshold will build a moving picture theater on North avenue, near Twenty-sixth street, Milwaukee, to cost $6,000.

Julius Wasnieuski will erect a moving picture theater to be located on Third avenue, near Mitchell street, Milwaukee, and will cost $7,000.

The new Orpheum theater was recently opened in Washburn.

The Princess theater, Vandenberg's new moving picture show at 2002 Hall avenue, Marinette, opened November 13.

A recent change of ownership has made R. Kuehne and Joseph Decker the proprietors of the moving picture business at Seymour. They will improve the theater and will start it under the management of Henry G. Lutsey.

Record of Current Films

Believing the classification of film pictures by the nature of their subjects to be of greater importance to the exhibitor than classification by maker, THE NICKELODEON has adopted this style in listing current films. Exhibitors are urged to make use of this convenient tabulation in making up their programs. Films will be listed as long in advance of their release dates as possible. Film manufacturers are requested to send us their bulletins as early as possible. Reasonable care is used, and the publishers cannot be responsible for errors.

LICENSED

DRAMA

Date.	Title.	Maker.	Length.
12-16	Her Indian Mother	Kalem	955
12-16	The Red Cross Seal	Edison	1,000
12-16	Little Snowdrop	Pathé	
12-16	Playing at Divorce	Vitagraph	655
12-17	Herod and the New-Born King	Gaumont	965
12-17	Saved by Divine Providence	Pathé	
12-17	A Dixie Mother	Vitagraph	997
12-19	Get Rich Quick	Pathé	
12-19	The Lesson	Biograph	994
12-19	The Dead Letter	Lubin	900
12-20	His Cinderella Girl	Gaumont	769
12-20	The Greater Call	Essanay	700
12-20	The Light in the Window	Vitagraph	997
12-21	The Tyrant of Florence	Eclipse	676
12-21	The Little Spreewald Maiden	Kalem	985
12-22	Overland to Fremont	Selig	1,000
12-23	When Lover's Part	Kalem	963
12-23	A Christmas Carol	Edison	1,000
12-23	The Lucky Charm	Pathé	
12-23	Clancy	Vitagraph	995
12-24	Sunshine in Poverty Row	Pathé	
12-24	The Old Home	Gaumont	732
12-24	Cain and Abel	Gaumont	279
12-24	The Bad Man's Christmas Gift	Essanay	975
12-24	Jean and the Waif	Vitagraph	989
12-26	Making a Man of Him	Lubin	980
12-26	Winning Back His Love	Biograph	994
12-26	The Atonement	Pathé	
12-26	The Rustlers	Selig	990
12-27	Eldora, the Fruit Girl	Edison	1,000
12-27	The Adventuress	Gaumont	995
12-28	A Mexican Romance	Eclipse	650
12-28	The Girl Spy	Kalem	935
12-29	Justinian and Theodora	Selig	1,000
12-29	In the Tall Grass Country	Melies	
12-29	The Blue Horse Mine	Lubin	990
12-30	The Romance of Hefty Burke	Edison	1,000
12-30	Catalan the Minstrel	Pathé	
12-30	The Stranger	Kalem	1,000
12-31	The Doctor's Secretary	Gaumont	981
12-31	A Gambler of the West	Essanay	1,000
12-31	Where the Winds Blow	Vitagraph	987
12-31	The Yaqui Girl	Pathé	
1-2	The Two Paths	Biograph	992
1-2	The Argonauts	Selig	1,000
1-3	In the Days of Chivalry	Edison	1,000
1-3	The Redeemed Criminal	Essanay	1,000
1-4	A Lock of Hair	Eclipse	978
1-4	The Cowboy's Innocence	Pathé	1,000
1-4	The Bolted Door	Kalem	975
1-5	Ramona's Father	Selig	1,000
1-5	His Last Parade	Lubin	390
1-5	The Crimson Scars	Melies	980
1-6	An Intrigue	Pathé	1,000
1-6	The Runaway Engine	Kalem	955
1-7	The Old Water Jar	Vitagraph	984
1-9	Shadows of the Past	Selig	1,000
1-9	The Italian Barber	Biograph	993
1-9	Tag Day at Silver Gulch	Lubin	935
1-10	The Test of Friendship	Edison	1,000
1-10	A Child's Plea	Gaumont	758
1-10	The Sophomore's Romance	Essanay	1,000
1-11	Washed Ashore	Eclipse	670
1-12	The Owner of the "L. L." Ranch	Melies	980
1-13	Water Lillies	Vitagraph	991
1-13	The Link That Held	Edison	960
1-14	The Girl of the West	Essanay	960
1-14	Coward or Hero	Vitagraph	975
1-14	A Simple Rustic Tale	Gaumont	958

COMEDY

Date.	Title.	Maker.	Length.
12-17	The Tenderfoot Messenger	Essanay	997
12-19	John Dough and the Cherub	Selig	1,000
12-20	Hank and Lank—Blind Men	Essanay	300
12-21	The Runaway Motor Car	Pathé	
12-21	Max Goes Ski-ing	Pathé	
12-21	The Joke Played on Bumptious	Edison	990
12-22	White Roses	Biograph	588
12-22	The Recreation of an Heiress	Biograph	410
12-22	An American Count	Lubin	975
12-22	A Western Welcome	Melies	980
12-23	Betty's Fireworks	Pathé	
12-27	Girls Will Be Boys	Essanay	1,000
12-27	In Neighboring Kingdoms	Vitagraph	995
12-28	A Family of Vegetarians	Edison	990
12-28	Running Away from a Fortune	Pathé	
12-29	After the Ball	Biograph	311
12-29	His Wife's Sweethearts	Biograph	682
12-30	Crazy Apples	Vitagraph	986
1-2	Art and the Legacy	Lubin	950
1-2	The Misplaced Petticoat	Pathé	790
1-3	All Is Fair in Love and War	Vitagraph	973
1-3	The Artist's Pay Day	Gaumont	972
1-4	Sleep, Gentle Sleep	Edison	990
1-5	When a Man Loves	Biograph	998
1-5	A Mix in Masks	Lubin	600
1-6	A Western Night	Edison	600
1-6	The Misses Finch and Their Nephew, Billy	Vitagrapr	979
1-7	Love Under Difficulties	Pathé	745
1-7	The Woman Wins	Gaumont	945
1-7	The Count and the Cowboy	Essany	1,000
1-10	Doctor Cupid	Vitagraph	987
1-11	The Twin Cinderellas	Pathé	
1-11	The Gardener's Ladder	Edison	700
1-12	The Rival Dramatists	Selig	1,000
1-12	The Midnight Marauder	Biograph	392
1-12	Help Wanted	Biograph	605
1-12	The Widow's Choice	Lubin	950

SCENIC

Date.	Title.	Maker.	Length.
12-20	The Kingdom of Flowers	Gaumont	220
12-28	Carnival of Japanese Firemen	Pathé	

DAILY LICENSED RELEASES.

MONDAY: Biograph, Lubin, Pathe, Selig.
TUESDAY: Edison, Essanay, Gaumont—Kleine, Vitagraph.
WEDNESDAY: Edison, Kalem, Eclipse—Kleine, Pathé.
THURSDAY: Biograph, Lubin, Melies, Selig.
FRIDAY: Edison, Kalem, Pathe, Vitagraph.
SATURDAY: Essanay, Gaumont—Kleine, Pathe, Vitagraph

Date.	Title.	Maker.	Length.
1-2	Dutch Kids	Pathé	197
1-10	The Hills of Corsica	Gaumont	243
1-11	The Home of the Seal	Edison	300

INDUSTRIAL

12-20	The Police Force of New York City	Edison	995
1-6	The Fire Department of New York City	Edison	400
1-11	Wood Carving at Brienz	Eclipse	320

SPORTS

12-16	International Motor Boat Race	Vitagraph	368
12-19	Hunting Sea Lions in Tasmania	Pathé	
12-21	A Chamois Hunt	Eclipse	332
12-28	Coaching in Devonshire	Eclipse	348
12-28	In Full Cry	Pathé	

TOPICAL

12-28	The American Fleet in French Waters	Pathé	
1-7	The Funeral of Count Tolstoi	Pathé	230

INDEPENDENT

DRAMA

12-16	The Old Miner's Doll	Yankee	
12-16	The Millionaire Milkman	Thanhouser	1,000
12-16	A Girl of the Plains	Bison	1,000
12-17	The Thin Dark Line	Reliance	900
12-17	The Mother's Shadow	Itala	500
12-17	His Gypsy Sweetheart	Powers	
12-17	A Christmas Letter	Great Northern	
12-19	Her Fatal Mistake	American	
12-19	The Child of Two Mothers	Eclair	545
12-19	The Museum of Sovereigns	Eclair	400
12-19	A Ward of Uncle Sam	Yankee	
12-20	The Cattle Baron's Daughter	Bison	900
12-21	Little Peter's Christmas	Ambrosio	500
12-21	The Arm of the Law	Atlas	
12-21	His Mother	Champion	950
12-21	Love's Sorrow	Revier	950
12-22	Little Nell's Tobacco	Imp	
12-23	The Pawn Shop	Solax	
12-23	The Childhood of Jack Harkaway	Thanhouser	
12-23	The Pale Face Princess	Bison	900
12-24	The Cattlemens' Feud	Columbia	
12-24	A Father's Love	Powers	
12-24	Necklace of the Dead	Great Northern	
12-24	The Refuge	Reliance	900
12-26	Alice in Funnyland	Gnome	
12-26	The Insane Heiress	Yankee	
12-26	The Unexpected Honeymoon	Imp	995
12-26	The Lock Keeper	Eclair	537
12-27	The Station Agent's Daughter	Powers	
12-27	The Vicar of Wakefield	Thanhouser	1,000
12-27	An Indian's Elopement	Bison	900
12-28	Thoughtfulness Remembered by the Ute	Revier	950
12-28	Elda of the Mountains	Nestor	
12-28	The Outcast's Salvation	Atlas	
12-28	The Golden Gates	Champion	950
12-28	Drama of the Engineer	Ambrosio	500
12-29	The Rustic	Itala	900
12-29	Unreasonable Jealousy	Imp	990
12-29	The Squaw and the Man	American	980
12-30	Hypnotized	Thanhouser	1,000
12-30	The Missing Bridegroom	Yankee	
12-30	Mrs. Richard Dare	Solax	
12-31	Trapped	Columbia	
12-31	A Daughter of Virginia	Powers	
12-31	The Scarcrow	Great Northern	
12-31	Trapped	Columbia	
12-31	A Jealous Wife's New Year's Day	Itala	500
12-31	A Sacrifice—and Then!	Reliance	900
1-2	The Wise Druggist	Imp	995
1-3	The Pinkerton Man	Powers	
1-3	The Pasha's Daughter	Thanhouser	
1-4	Straw Ride	Atlas	
1-4	Days of the Early West	Champion	950
1-5	Reunited	Imp	995
1-7	A Woman Without a Heart	Powers	
1-7	The Red Light	Great Northern	
1-7	Queen of the Prairies	Columbia	
1-9	An Arizona Romance	American	990
1-9	Their First Misunderstanding	Imp	998
1-11	Sleepy Hollow	Nestor	
1-12	The Empty Shell	Imp	995
1-13	The Girl and the Burglar	Solax	

COMEDY

12-16	How He Won Her	Lux	344
12-16	Her Favorite Tune	Lux	550
12-17	Thieves as Quick Change Artists	Itala	500
12-17	Dickey's Courtship	Great Northern	
12-19	The Crippled Teddy Bear	Imp	
12-20	Looking Forward	Thanhouser	
12-20	Jack Logan's Dog	Powers	
12-20	The Bachelor's Finish	Powers	
12-21	Tweedledum Gets Married	Ambrosio	500
12-22	Who Was the Culprit	Itala	500
12-22	Her Husband's Deception	American	
12-22	A Troublesome Parcel	American	
12-23	A Desperate Remedy	Nestor	
12-23	Bill Plays Bowls	Lux	423
12-23	Rosalie's Dowry	Lux	492
12-23	Terror of the Plains	Yankee	
12-24	Greediness Spoiled Foolshead's Christmas	Itala	500
12-26	The Fear of Fire	Eclair	390
12-26	Girlies	American	1,000
12-27	Freddie's Courtship	Powers	
12-28	Grandfather's Pipe	Ambrosio	500
12-30	Aunt Julia's Portrait	Lux	373
12-30	Tim Writes a Poem	Lux	373
12-30	Taming the Terror	Bison	900
1-2	Mrs. Gaylife's Visitors	American	970
1-2	The Great Medal Competition	Eclair	485
1-2	A Well Matched Marriage	Eclair	480
1-3	Beaux Not Wanted	Powers	
1-5	The Tenderfoot's Roundup	American	950
1-6	The Night Cap	Solax	
1-6	The Royal Wishbone	Yankee	
1-6	Baseball and Bloomers	Thanhouser	
1-12	Lucy's Lover	American	560
1-12	The Borrowed Flat	American	420

SPORTS

12-22	Neapolitan Volanic Islands	Itala	500
12-24	In Norway	Itala	500
12-31	Bear Hunting	Great Northern	
12-31	Norwegian Waterfalls	Itala	500
1-6	Salmon Fishing in Canada	Solax	

DAILY INDEPENDENT RELEASES

MONDAY: American, Eclair, Imp, Yankee.
TUESDAY: Bison, Powers, Thanhouser.
WEDNESDAY: Ambrosio, Atlos, Champion, Nestor.
THURSDAY: American, Defender, Imp, Itola.
FRIDAY: Bison, Lux, Solax, Thanhouser, Yankee.
SATURDAY: Columbia, Gt. Northern, Itala, Powers, Reliance.

W. No. 1. Jan. 7 '11. Cont. as "Motography"

THE NICKELODEON

$2.00 Per Year | Published Weekly by ELECTRICITY MAGAZINE CORPORATION, Monadnock Building, Chicago | 10 Cents Per Copy

Vol. V | CHICAGO, JANUARY 14, 1911 | No. 2

Solax Company

MAKERS OF FINE FILMS

BEST FILM MADE

TINTED AND TONED THROUGHOUT

Scene from "A REPORTER'S ROMANCE"

PERFECT Photography

PERFECT PRODUCT

POWERFUL PLAYS

RELEASE JAN. 13th
The Girl and the Burglar
DRAMA
Showing how a clever society girl outwits a society crook.

RELEASE JAN. 20th
A Reporter's Romance
DRAMA
A young woman reporter disguised as a denizen of the underworld experiences many adventures.

RELEASE JAN. 27th
His Best Friend
DRAMA
A dog picture. The intelligence displayed by this animal is something wonderful.

147 Fourth Ave. **Solax Company** New York City

LUBIN FILMS

Released Thursday, January 19

A BROTHER'S REDEMPTION

The beautiful story of a wayward son's repentance and redemption, with scenes in the Civil War period. Length about 1,000 feet.

Released Monday, January 16

Double Reel

WILL IT EVER COME TO THIS?

A roaring burlesque on the new woman. Every foot a laugh. Length about 715 feet.

EASY COIN

A whole lot of fun in a short space. Length about 250 feet.

Released Monday, January 23

FATHER MAKES HIMSELF USEFUL

This domestic comedy is sure to appeal to any audience. Father certainly did make himself useful when a misunderstanding threatened to come between his son and his son's wife. Very funny. Length about 975 feet.

Released Thursday, January 26

FATHER LOVE

The "touch of nature" that "makes the whole world kin" is in this sweet story of a father's love for his child. Length about 1,000 feet.

Released Monday, January 30

HIS BOGUS UNCLE

Pictures the comical developments which follow a young man's attempt to adopt a "rich uncle" in order to win a girl. Sparkling with fun. Very well acted. Length about 1,000 feet.

Lubin Manufacturing Co.

Model New Factory 20th and Indiana Ave. **Philadelphia, Pa.** Chicago, 22 Fifth Ave. London, 45 Gerrard St. Berlin, 35 Friedrich Str.

THE NICKELODEON

PUBLISHED EVERY SATURDAY BY THE

ELECTRICITY MAGAZINE CORPORATION

MONADNOCK BULDING, CHICAGO

ED J. MOCK AND PAUL H. WOODRUFF, EDITORS — JAMES B. CRIPPEN, ASSOCIATE EDITOR

LONG DISTANCE TELEPHONE: HARRISON 3014

NEW YORK OFFICE: 1433 HARTFORD BLDG., 41 UNION SQUARE
LAURENCE F. COOK, Eastern Representative
TELEPHONE, STUYVESANT 1672

LONDON OFFICE: 36 MAIDEN LANE, COVENT GARDEN
S. RENTELL & CO., Representatives

Table of Contents

Terms of Subscription.—UNITED STATES, CUBA and MEXICO ..... PER YEAR $2.00
CANADA ..... PER YEAR 2.50
FOREIGN COUNTRIES WITHIN THE POSTAL UNION ..... PER YEAR 3.00
SINGLE COPY ..... .10

DISTRIBUTING AGENTS: The Western News Company and its International Branches.

NOTICE TO ADVERTISERS.—Changes of advertising copy should reach the office of publication not less than five days in advance of date of issue. Regular date of issue, the first and fifteenth of each month. New advertisements will be accepted up to within three days of date of issue, but proof of such advertisement can not be shown until the appearance of the edition containing it.

NOTICE TO SUBSCRIBERS.—Remittances should be made by check, New York draft or money order, in favor of THE NICKELODEON. Foreign subscriptions may be remitted directly by International Postal Money Order, or sent to our London office. The old address should be given as well as the new, and notice should be received two weeks in advance of the desired change.

ENTERED AS SECOND CLASS MATTER JANUARY 15, 1910 AT THE POST OFFICE AT CHICAGO, ILLINOIS, UNDER THE ACT OF MARCH 3, 1879.

Scene from the American Feature Film "Bertie's Bandit."

THE NICKELODEON

AMERICA'S LEADING JOURNAL OF MOTOGRAPHY

VOL. V | CHICAGO, JANUARY 14, 1911. | No. 2

WANTED—A CAMERA.

IT has often been said in idle talk that the independents lack this thing, or that thing, whose possession might mean immediate success. The thing most prominently mentioned as missing has generally been money. The imputation of a shortage of capital perhaps did not take into consideration the fact that when one has a really good thing, and can prove the stability of his position, money is readily forthcoming. The thing the independents really want is a camera.

Prominent inventors in this country—among whom Thomas A. Edison has been not the least prominent—have recently made it their hobby to belittle the value of patents. Mr. Edison himself has gone on record as saying that patents in themselves have small value. Experience in the motion picture field seems to indicate that these gentlemen may not be entirely right in their criticism of one of our most important institutions. Indeed, we may go so far as to say that the courts seem to hold that the patent may be good even where the invention itself may be doubtful. The monopoly of the Motion Picture Patents Company, insofar as its tendency is monopolistic, is based wholly upon the patents it controls, and is consequently unassailable under the anti-trust laws as they are viewed at present. A patent is in itself essentially a monopoly. It may be, of course, that the higher courts will not sustain the opinion of the circuit court on the cameras mentioned in the cases tried last week. On the other hand, it is likely that they will, and if they do, no better example could be desired of the real value of a patent, provided its claims are anywhere near reasonable.

The Edison patent which has proved the stumbling block in the way of independent progress has but a few more years to run. But those few more years mean possibly hundreds of thousands of dollars to one side or other. Late as it is, the inventor of a really good and absolutely noninfringing motion picture camera could today obtain a price for his idea beyond even the dream of most inventors.

Of course, invention has not lain dormant in this particular field. Ideas have been plenty and patents have been issued. Some of them have come into considerable temporary prominence. But they have never come into court to try out their claims, and in most cases have preferred to remain, mechanically at least, in obscurity. We must accept the evidence that they have not entirely made good. They are failures in some respect or other. In the Motion Picture Patents Company's motion for preliminary injunction against the Yankee Film Company, William Steiner and others, the court says "It was so easy to demonstrate noninfringement by showing that either the film moved continuously or that the lens or lenses moved —a demonstration which might have been made to the court if not to the adversary—that the failure to do so arouses suspicion." Infringement in this case, it will be noted, applies just to one patent: Re-issue No. 12,037, Edison. The requirements are simple enough. The film must be kept moving all the time pictures are taking, instead of jumping it along from one picture to another. This condition the Bianchi camera apparently met successfully. Yet if it is successful its promoters must surely be accused of bad management, for it obviously is not in general use among the independents. Of course there are other patents which the inventor must consider in his efforts at noninfringement. It is not necessary to enumerate them at the present time, for any inventor who wants to try his hand at the game will have to study up on the existing patents anyway.

It must be confessed that the "interests" seem to have the camera end of the business sewed up pretty tightly. Not so tightly, however, that it is not worth while for bright minds to tackle the problem. A good noninfringing camera invented now would do either one of two things. It would either open a broad field to the independents, or, by adding to the property of the holders of other patents, would tie up the "open market" all the more tightly for a good while to come.

MR. HAMILTON ON PHOTOPLAYS.

IN ANOTHER part of this issue we reprint an article entitled "The Art of the Moving-Picture Play," by Clayton Hamilton. The article is of great interest and has an added value in that it was written by one of America's foremost dramatic critics. Mr. Hamilton is even something more than a dramatic critic, for his essays and contributions to the magazines generally look at matters dramatic in their larger aspect, concerning himself more with general principles than with special happenings. He is, in other words, something more than a play-reviewer and occupies a position of undoubted authority, enjoying fame on both sides of the Atlantic. Words of praise and encouragement coming from such a man are worth harkening unto.

In his article, Mr. Hamilton, after observing that the photoplay is a new type of narrative art deserving serious criticism, proceeds to point out some of its uses and beauties and distinctive features. He shows how able it is to render the spoken drama through its own medium of pantomime, and wonders that more of the standard dramas have not been adapted; also urges that particularly fine bits of contemporary acting be recorded for posterity, just as Caruso's voice is recorded by the phonograph. He points out an important respect in which the motion picture is a more serviceable medium for story-telling than the regular drama, namely its freedom over space and time in the

matter of stage setting and the rapid transition of scenes. Comparing the photoplay with the novel and the regular drama he demonstrates that the photoplay is, in its ability to handle the element of action, more successful than the novel and scarcely less successful than the drama, and that in handling the element of setting it is overwhelmingly superior to both. For instance, the stage can represent an outdoor scene only meagerly and with obvious artificiality, and the novel can represent it not at all, that is, not directly to the physical sense; whereas the motion picture can give a presentment of the real thing. He considers it "an exceedingly important point that criticism is forced to concede that the local environment of a story may be exhibited more directly and more vividly in the moving-picture play than in any of the older types of narrative." It is only in handling the element of character that the photoplay is at a disadvantage in competing with the novel and the drama. From this it follows that "the most desirable narrative material for a moving-picture play is material in which the elements of action and setting are paramount and the element of character subsidiary—in other words, a story in which incident treads upon the heels of incident and the action rushes headlong through a hurried succession of objective events, set preferably out-of-doors." That this is a truthful and excellent bit of analysis cannot be gainsaid. Mr. Hamilton notes that the photplay has driven the old type of 10-20-30 melodrama out of existence, due principally to the fact that it is better art; and he believes that the photoplay can, if it chooses to avail itself of its artistic opportunities, raise itself to competition with the more refined and more expensive types of drama. "Many of the moving-picture plays which may now be seen are good; but only a little imagination is needed to see that they might easily be made better."

Even the most rabid photoplay enthusiast will agree with that statement. There is room for improvement. In fact, we are all agreed that the motion-picture is still in its callow youth, although it has already proved itself to be a mighty precocious youngster. Like all youngsters the photoplay feels gratified to find itself taken seriously by a wise one like Mr. Clayton Hamilton. It is such dignified and encouraging treatment as this that will lead the photoplay to better things. New York papers please copy!

PICTURES AND VAUDEVILLE IN NEW YORK.

A MOST unusual feature of the New York moving picture situation is the startling lack of houses that supply an exclusive motion picture entertainment. The exhibitors seem to be afraid of a show that does not include some vaudeville. Their competitors have vaudeville. Enough! What one has all must have. So each gets along as best he can, showing a little of the poorer vaudeville and as much of the pictures as he dares. This has no reference to those neighborhood houses that make a specialty of low priced vaudeville. It refers to the moving picture exhibitors, who are presenting a moving picture show, diluted with cheap vaudeville. The contention is sometimes made that this vaudeville is just as good as that presented in the high-priced houses. There is a most convincing argument against this contention. Go to any booking agency that sends acts to these moving picture houses, and then go to those houses that book the big circuits. Compare the personnel of the two. Comparisons are odorous, to be sure; but if this does not prove to the observer that there must of necessity be a difference in the quality of the vaudeville booked by these different agencies, then there is no advantage in brains and personality.

Yet the exhibitor still clings to his vaudeville, and the many troubles incident to trying to handle cheap actors. Men who have the interests of the photoplay at heart have argued with the exhibitors in vain. They have argued with them individually and collectively. They have cited examples of exhibitors in other cities who have built up a wonderful patronage with a simon pure picture show relieved by an illustrated song, but to no purpose. Of course, they cannot deny that these successes do exist, but they claim that the exclusive picture show could not succeed in New York. Just how or why they figure that in human nature and tastes New York differs from the rest of the country, even the exhibitors themselves cannot say. Surely this belief is no compliment to the New York public. On the contrary it looks as though it were a serious reflection on the aesthetic development of the Gothamite. A concrete example of this feeling is to be had in the declaration of the manager of a new east side theater soon to be opened. This manager has been directly approached by several men interested in the trade, who have tried to convince him of the business sense of running a motion picture show exclusively. This particular organization has sufficient confidence in the east side public to invest $20,000 in a brand new picture house, yet the management claims that this same public will not patronize his house unless he gives a certain amount of blood and thunder.

All of this seems very discouraging, but as surely as dropping water will wear stone, just so surely will these enthusiasts some day secure for the New York public a downtown theater, which will be used for moving pictures exclusively. Properly managed, such a house will unquestionably be a great success. Then, and then only, will the New York exhibitors be convinced, and being convinced they will rush to remodel their programs. You see, New York is on an island, and globe trotters, as well as students of human nature, will tell you that those who live on islands are very conservative.

SUNDAY SCHOOL INSTALLATIONS.

REV. DR. J. ROY POSTLEWAIT of Kansas City, who has charge of the Twenty-ninth Street Institute in that city, has the following to say of the effect of the right kind of motion pictures upon the young:

"A motion picture machine has been purchased and installed in the institute for the purpose of presenting lessons to the children in an attractive and impressive manner. It is expected that this will increase the attendance in the Sunday school about two hundred and will add to the interest in every department of the church. Everybody in the Sunday school, both large and small, will receive an admission card to the entertainment Friday evenings.

"I believe every church should have a motion picture machine and use it every week for explaining the lessons for the following Sunday in addition to the necessity for its use as a means of entertainment for the younger folks, who must be reached and held by extraordinary methods."

Motographing Projectiles in Flight

By Dr. Alfred Gradenwitz*

THE improvements suggested by the late Prof. Marey of Paris have made of the cinematograph not only an effective apparatus for popular exhibition purposes, but one of the most useful instruments in scientific investigation. By decomposing even the swiftest movements into their various phases, it in fact allows the very mechanism of motion to be studied. Among the most remarkable achievements in this connection should be mentioned the photographing of the flight of insects† and the production of animated X-ray pictures,‡ both of which have been done by the scientific staff of the Marey Institute.

It will be remembered that Lucien Bull, in photographing the flight of insects, used electric sparks for obtaining an extremely rapid succession of individual views. Dr. Cranz, professor at the Berlin Military Academy, independently of the French experimenter, has evolved another spark method of cinematography which is even more effective, allowing as it does a series of 500 consecutive pictures to be recorded within 1/10 of a second, the times of exposure varying, according to the sharpness of pictures, between 1/1,000,000 and 1/10,000,000 of a second.

As this method is mainly intended for investigating the mechanism of the flight of projectiles, it until quite recently was kept secret for military reasons. Through the courtesy of its inventor, we are now enabled to place before our readers a detailed description of the arrangement used by him. Needless to say, the same method can be used advantageously in studying any kind of rapid motion.

The system is based on a combination of the principle of wireless telegraphy and the Mach principle. Supposing the primary of an induction coil J_1 (Fig. 2) to be fed by direct current opened and closed at regular intervals by a Wehnelt interrupter W or a turbine interrupter, a regular succession of sparks will pass in the secondary circuit between the electrodes of a spark gap F_1, arranged in parallel to an adjustable condenser C_1. These sparks are used for illuminating the moving object to be photographed, a concave mirror serving to concentrate on an objective of small focus as much of its light as possible, so as to produce at each passage of a spark on the rapidly moving film a silhouette of the dimensions of ordinary cinematographic pictures. The endless film f runs over two steel drums R_1 and R_2, one of which is driven by an electric motor. In order to prevent a repeated lighting of the film, a special interrupter is provided for starting the sparking shortly before the beginning of the process to be photographed, and interrupting it shortly after its completion. This interrupter comprises a pendulum P, which in the beginning is kept in position by an electro-magnet E_1 and four parallel circular metal bars, on which are free to slide the make-and-break contacts *1, 2, 3, 4, 5*. As the current of the electro-magnet is interrupted, the pendulum is set moving so as to strike contact *1*, and thus to interrupt the current in the electro-magnet E_2. After thus disengaging electro-magnetically the shot to be photographed, the pendulum will continue its oscillations, closing contact *2*, and thus starting the sparking. As the pendulum reaches contact *3*, the sparking is again interrupted. In actual practice the intermittent direct current in the primary of the induction coil J_1 is replaced (as in wireless telegraphy) by an alternate current.

Fig. 1.—Action of Self-Loading Pistol.

The condenser capacity and the length of the spark gap are checked, at first with the ear, and later by successive photographic tests.

In Figs. 1, 3, 4 and 5 are reproduced some films obtained with this apparatus.

Fig. 1 represents the working of a self-loading pistol. When inspected in a cinematograph at reduced speed, the hammer is at first seen to close slowly, while powder gases begin to escape. At the same time, the air vibrations set up by the report of the pistol are distinctly seen. The projectile eventually leaves the barrel, thus allowing the bulk of the powder gas to escape. At the same time, the breech block of the pistol opens, and while the locking piston recedes, the empty cartridge is discharged, the locking piston again moves on slowly, and a new cartridge is inserted.

Fig. 3 shows the piercing of a freely suspended ball of moist clay. After gradually approaching, the projectile penetrates the ball, giving rise immediately to a projection of clay particles from the point of impact. The projectile eventually pierces the ball, issuing at its side with a fluttering motion. The film strikingly illustrates the gradual progress of explosion.

In Fig. 4 is represented a freely suspended rubber ball filled with water, which under the impact of the projectile is lengthened enormously, being finally atomized.

Another interesting case, viz., that of a lead tube filled with water and closed at both ends by caoutchouc membrane, is represented in Fig. 5. A self-loading pistol is used

*Scientific American.
†THE NICKELODEON, September 15, 1910.
‡THE NICKELODEON, October 15, 1910.

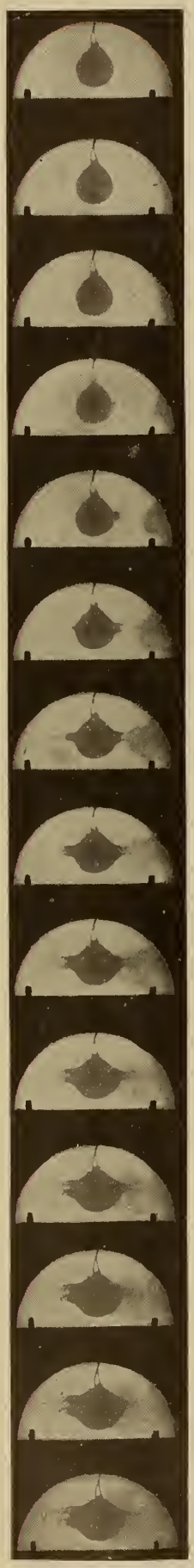

Fig. 3.—Bullet Piercing Ball of Clay.

Fig. 4.—Effect on Water-Filled Rubber Ball.

Fig. 5.—Pressure Waves Shown by Jet.

Fig. 6.—At the Instant of Explosion.

Fig. 7.—Showing Unconsumed Grains of Powder.

Fig. 8.—Another Discharge Showing Unconsumed Powder.

Fig. 9.—Projectile Issuing from Barrel.

to sheet lengthwise with full regular charge, through this tube, pierced at the top by several small rounded holes. The transmission of pressures in the interior of the water can be distinctly followed by observing the gradual projection of water from the holes. The caoutchouc membranes at the same time bulge out considerably, which phenomenon is of great importance in studying the effects of projectiles, especially in the piercing of bones. Explosion is not completed in less than about 300 individual pictures.

This process has been utilized in recording the working of self-loading arms, the effects of explosion of modern infantry projectiles in moist clay and in vessels filled with water, the crushing of bones, the shock of elastic steel balls, the motion of insect wings, etc. All these different phenomena, when reproduced on a projection screen, seem to occur very slowly, and accordingly can be analyzed in all their details.

In Figs. 6 to 8 are reproduced some enlarged pictures showing the behavior of different kinds of ammunition. A striking fact brought out in this connection is that even in the case of the ordinary ammunition, some powder particles (which like all other solid particles discharged from the tube, closely follow the projectile itself) will be visible at the breech of the rifle. Fig. 9 also represents the course of the projectile and powder in the neighborhood of the mouth.

The process above described further enables the speed of translation of a projectile close to the muzzle to be ascertained with remarkable accuracy. To this effect is used a steel drum *T* (Fig. 10) about 25 centimeters in width, with a small slot diaphragm parallel to its axis. A series of pictures one centimeter in height and 25 centimeters in width is produced through the slot, on a film band running around this drum. The projectile flying past the drum will photograph itself repeatedly, as shown in Fig. 10. The horizontal distance *AB* between the first and last projectile pictures, as well as the vertical distance *BC*

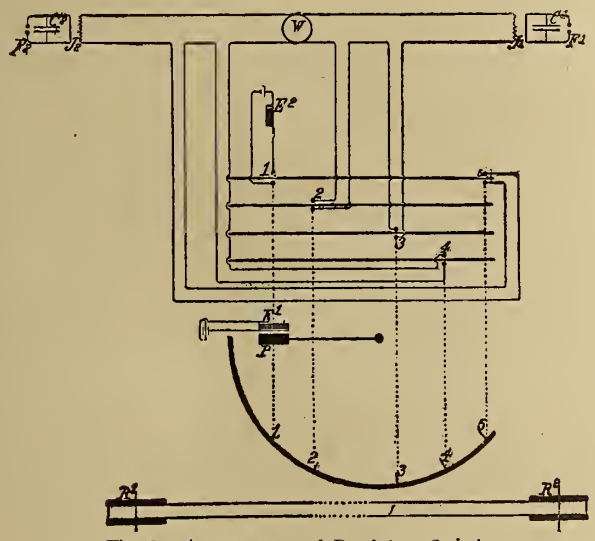

Fig. 2.—Arrangement of Pendulum Switch.

having been measured, the tangent of the angle *ACB* will be the average speed of the projectile.

In this manner can be checked and determined any fluctuations in the course of the projectile. If a plate to be pierced by the projectile be placed in front of the middle of the drum, the speed being measured before and behind the plate, the loss in speed due to its piercing can be ascertained. In order to determine any losses in speed due to the resistance of the air and other factors, the speed of the projectile is measured after the process above described, at the beginning and end, respectively, of an extensive free trajectory. To this effect the experimental outfit, as far as the induction coil, condenser, spark gap, drum, and mirror are concerned, is duplicated. (Fig. 2.) After disengaging the pendulum, the shot is started with

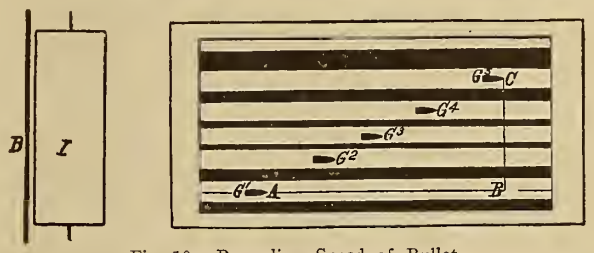

Fig. 10.—Recording Speed of Bullet.

contact *1*, while with *2* the sparking is started only to be interrupted at contact *3* (the interval comprising about 20 sparks). The projectile then continues on its course, and the pendulum goes on working. As it reaches contact *4*, the sparking is started anew, being interrupted at *5*, after an interval of about 20 sparks.

In concluding, the writer wishes to express his indebtedness to Prof. Cranz for courtesies shown him in preparing this article.

Christmas Treat for Insane

With a moving picture show—the first that half of them had ever seen—the inmates of the Western Washington Hospital for the Insane at Fort Steilacoom, Wash., were given a Christmas eve entertainment.

The moving picture machine, Superintendent A. P. Calhoun says, has been installed as a permanent feature of asylum life. It was set up in the amusement hall and its presence kept as a profound secret until the first film was flashed onto the screen last evening. To say that it created a sensation among the asylum inmates is putting it mildly.

The films were mostly of the comic order, and these created intense merriment. The ups and downs of the heroes and heroines of the moving pictures were followed with attention that no nickel theater patron ever bestowed.

For the rest of the winter, Dr. Calhoun says, a moving picture show will be a weekly event or else will be given every two weeks, dances being arranged for the alternate dates. The program was varied by illustrated songs.

Leavenworth Prisoners Have Show

The inmates of the United States Penitentiary had one of the biggest motion picture entertainments Monday morning, December 26, that has been witnessed by anyone inside or outside of a penal institution. It has been found that the prisoners enjoy these greatly and Warden McClaughry made arrangements with C. F. Mensing for a show to consist of 6,000 feet of film. Two picture operators were required to run the show properly, to obviate delays between pictures and "Big Jim" McQuade, the new vocalist at the Leavenworth Casino theater, sang spotlight songs.

Preliminary Injunctions on Cameras

The United States Circuit Court at New York has granted a preliminary injunction in the case of the Motion Picture Patents Company vs. the Champion Film Company. Judge Lacombe states his opinion as follows:

This is an application for preliminary injunction under Re-issue Patent No. 12037 to Thomas A. Edison for a kinetoscope, which was sustained and its claims construed by the Circuit Court of Appeals in this circuit in Edison v. Am. Mutoscope & B. Co. 151 F. R. 767. An earlier decision of that court discussed the original patent, 114 F. R. 926. Nothing that was said in either of these opinions need be repeated here; it is assumed that they will be consulted. They describe the device of the patent and analyzed the claims so fully, illustrating the decision by describing the cameras which were held, the one to infringe, the other not to, that it seems not difficult to apply the principles of the decision to the Gaumont and Champion-Gaumont cameras now before the court. The differences between these two alleged infringing cameras are unimportant, defendant apparently does not contend otherwise, therefore this discussion will be confined to the Champion-Gaumont type, of which an operative camera has been submitted for inspection. The film moving mechanism of both, however, is so well shown in the drawing and blue print, filed with the papers that their operation may be easily understood. The film passes from the delivery roll to a delivery wheel whose sprockets engage positively with holes in the sides of the film, this wheel revolves, not intermittently, but continuously, and in operation there is always a loop or slack part of the film between it and the film guide. In consequence the delivery wheel does not itself advance the film through the guide. In the Mutoscope case it was held that these circumstances did not negative infringement. The film passes through the guide, around a cam eccentrically mounted on a continuously moving wheel, to the take-up reel where it engages with sprockets, the latter reel revolving continuously. The operation is as follows. The device being at rest there is the loop or slack above the guide entirely free to be drawn down through the guide, the same as in the Biograph and in the Warwick cameras, which were considered in the Mutoscope case. In the Biograph instrument this slack was pulled through by two friction rollers revolving continuously, the movement of the film being intermittently checked by a so-called tension leaf. "The engagement with the film was wholly frictional;—no such interlocking as will hold the film firmly advancing it with mathematical accuracy; there was the possibility of slip." In the Warwick the film was pulled through by a bifurcated fork which engaged with holes and advanced the film mathematically a certain distance and then disengaged; the court of appeals held that the bifurcated fork was a fair equivalent of the wheel with sprockets. In the Champion-Gaumont when at rest the film is stretched taut between the guide and the take-up sprocket wheel, resting snugly against the cam. We may assume that at that time the outer edge of the cam is on the side of the wheel furthest away from the film. Its position is not essential, substantially the same cycle of movement may be worked out if it be in the reverse position. The machine being started what happens in a given space of time? The moving sprocket wheel revolves through a predetermined arc and, carrying the film on its sprockets, advances the film a predetermined distance. During the same time the outer edge of the eccentric cam is brought into engagement with the taut film and, revolving, pushes it out a distance predetermined by the amount of the cam's eccentricity. The film thus pushed out cannot come from the side of the take-up wheel where it is held firmly on sprockets, it can readily come and does come out of the film-guide, the slack above the guide allowing it to move easily forward. As the revolving eccentric cam recedes to the inner side of its wheel axis it leaves the film which it has pushed out and for a brief interval there is no movement of the film out of the guide, because the cam is no longer pushing on it, and the sprocket wheel cannot pull on it till it has first taken up slack. During that period the film is at rest for receiving impressions from the lens.

Defendant contends that this operation of advancing the film is wholly frictional, that there is every possibility to slip and that the spacing cannot be mathematically accurate. This contention is not found persuasive. There is friction between the cam and the film but it is very different from the action of two rollers whose frictional contact alone gives a grip and produces a pull. One end of the film (the part on the sprocket wheel) is firmly held, it cannot slip back and in reality it is this which causes it to advance when the cam pushes it. It must advance or break. I find it impossible from a study of the drawings or from a manipulation of the exhibit to see any possibility of slip. Why the spacing should not be mathematically accurate is not apparent. The arc through which the sprocket wheel will move in a given time is predetermined, the equivalent in linear movement of the film is known. The additional length of film which will be hauled out of the guide to accommodate the eccentric cam is also predetermined by the measure of the cam's eccentricity. The total distance the film will advance past the lens, being the sum of these two predetermined items, is itself predetermined. The period of rest may also be predetermined, it would seem with mathematical accuracy. It is the time necessary for a sprocket wheel, of a given diameter revolving at a given speed, to reel up the amount of film required to accommodate a protruding cam, the extent of whose eccentricity is accurately known.

The conclusion is reached that the Champion-Gaumont and the Gaumont machines infringe. It is conceded that the Pathe machine, one of which is owned by defendant, also infringes. This and its Champion-Gaumont may, as suggested, be impounded in the custody of defendant's counsel until final hearing.

Preliminary injunction may issue.

This decision was followed a few days later by a preliminary injunction against the Yankee Film Company, William Steiner, Herbert Miles, C. V. Henkel and Joseph Miles.

Judge Lacombe said:

The defense of failure to disclaim as to claim four was disposed of in decision on the demurrer.

The defense of prior invention of Friese-Green, now presented for the first time after the patent has been for several years in litigation and long since sustained by the Circuit Court of Appeals, is one to be passed upon at final hearing.

The defense that the suit against the Mutoscope Company, in which the Circuit Court of Appeals sustained the validity of the patent, was a collusive one must also be reserved for final hearing.

As to infringement, defendants have been engaged in one way or another in having moving pictures taken by two different cameras or in selling or leasing the reproduction of exposures thereon. Apparently, on their own admissions, they were satisfied with the statements of the persons taking the pictures that the machines did not infringe; they took no steps to assure themselves that these statements were correct. It was so easy to demonstrate non-infringement by showing either that the film moved continuously or that the lens (or lenses) moved—a demonstration which might have been made to the court, if not to the adversary—that the failure to do so arouses suspicion. Undoubtedly the detectives who testify for complainant were able to give but a hasty glance at the interior on the two occasions when the covering cloth was disarranged, but the affidavit of the defendant, Henkel, in connection with the other testimony seems to indicate sufficiently to make out a prima facie case that those two cameras are really of the Gaumont or so-called "beater" type which have been held to infringe in Motion Picture Patents Company vs. the Champion Film Company, recently decided.

Injunction may be taken against all the defendants.

Further action in these cases will be closely watched by the trade.

At a meeting of the moving picture proprietors of Toronto, an association will be formed which is planned eventually to become a provincial body. It is claimed that the police differ as to what constitutes an immoral picture and the moving picture men want a definite ruling in this matter.

New Amusement Patents

By David S. Hulfish

It will be the purpose of this department to list all United States patents, as they are issued, which pertain to any form of amusement business, giving such data in each case as will enable the reader to judge whether he wishes to see the complete drawings and specifications of the patent. When patents of special interest to THE NICKELODEON readers are encountered, the descriptive matter herein will be amplified accordingly. A complete copy of drawings, specifications and claims of any patent listed will be furnished from this office upon receipt of ten cents.

U. S. Patent No. 966,090, for an Intermittent Motion Device for Motion Pictures. This is adapted for camera or for projecting machine, and even for the printing machine of the stepping class.

In the accompanying figures, Fig. 1 is a broken plan view, and Figs. 2 and 3 are broken sections taken on the lines AA and BB respectively, of Fig. 1.

Referring to Figs. 1, 2 and 3, in a suitable frame 6 is shown to be journaled a power-shaft 7 carrying near one end a gear-wheel 8 and near its opposite end a gear wheel 9 releasably secured to the shaft by a set-screw 10 working through the hub of the wheel in a

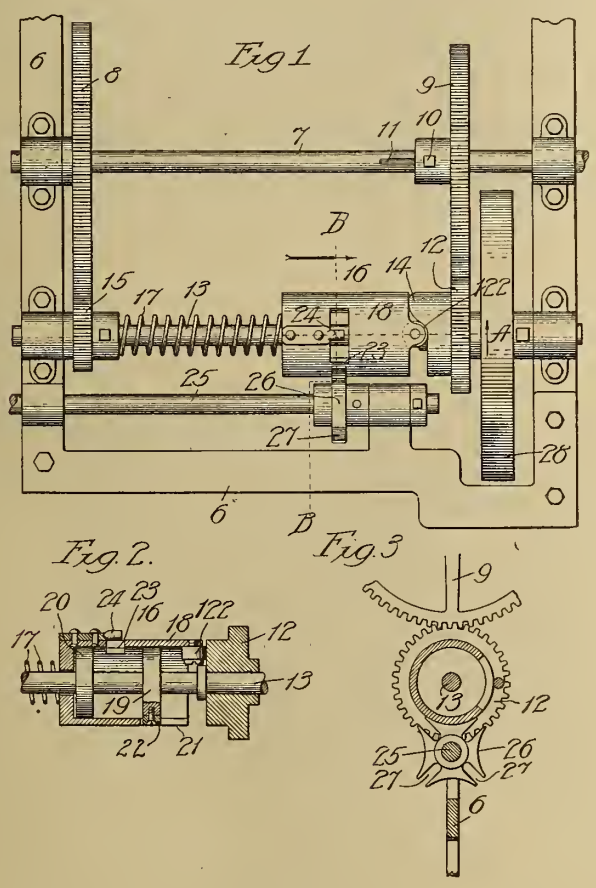

groove 11 provided in the shaft to enable the wheel 9 to be readily set with reference to another gear 12. In the frame is also journaled the drive-shaft 13, having loosely mounted on it near one end the gear-wheel 12 to mesh with the gear 9, to which it bears the relation of 1 to 2, the gear 12 having a cam-faced hub 14; and the drive-shaft carries near its opposite end a gear wheel 15 meshing with the gear 8 and bearing the relation to the latter of 1 to 4.

On the shaft 13 is mounted, in a manner to permit it to be reciprocated longitudinally, a cylindrical body 16, between which and the hub of the gears 15 a spring 17, coiled about the shaft, is confined. For the attainment in the body of simplicity of construction and lightness, it is preferably formed as a cylindrical shell 18 fitting about rigid collars 19 and 20 on the drive-shaft and containing in one end a longitudinal slot 21, in which a guide-head 22 is confined by screwing it against the collar 19, thus to cause the shell to rotate with the shaft and also to guide it in its longitudinal movements; an anti-friction roller 122 depends at one end of the shell to engage the cam 14, and toward the opposite end of the shell is formed therein, crosswise of the axis, a slot 23 across which extends a pin or finger 24 rigidly fastened to the shell.

The intermittent shaft 25 is also journaled in the frame and carries a star-wheel 26 in position to register with the slot 23, this wheel being of ordinary "Geneva" movement variety and containing four recesses 27 equidistant apart, between which the periphery forms concave arcs conforming to the circular surface of the shell 18. On the shaft 13 is shown a fly-wheel 28.

The operation is as follows: The power-shaft 7, by its gear-connections 8, with the shaft 13 drives the latter at high speed, their relation being 1 to 4, while the gear 9, bearing the relation of 2 to 1 to the gear 12 drives the latter at one-half that speed, so that the shell 18 turns twice as fast as the cam 14, whereby, in alternate revolutions of the shaft 13, the roller engages the cam to force the sleeve 18 against the resistance of the spring 17. In each intermediate revolution of the shaft 13 the pin 24 engages a slot 27 in the star-wheel, thereby quickly turning it, with the shaft 25, through a partial rotation, or until the pin clears the slot, thereby bringing a concave section of the star-wheel against the surface of the shell 18 to lock the wheel 26 against movement until another slot in it is encountered by the pin, all in the well known manner. The slot 23 is provided to permit the star wheel to operate in its circular path without obstruction.

In each alternate revolution of the shaft 13, the cam 14 moves the shell 18 lengthwise of the shaft, and the parts are so relatively arranged as to cause that movement to carry the pin 24 out of the path of the star wheel, thereby leaving the latter stationary. Each time the roller 22 clears the cam, the spring 17 recoils to restore the body 16 to its normal position. Thus, as will be seen the star wheel is caused to skip a movement in each alternate revolution of the driving shaft. By properly arranging the relations between the gears 9 and 12 and suitably modifying the cam mechanism, the driving shaft may be caused to make any desired number of revolutions without actuating the star wheel.

If it should be desired to prevent the "skip," and thus cause the regular operation of the intermittent shaft, this may be accomplished by loosening the set-screw 10 to prevent the shaft 7 from rotating the gear 9 to render the cam inoperative.

The full text of the claims of the patent is as follows:

1. In an intermittent-motion device for actuating the film in a moving picture-machine, the combination of a drive-shaft and a driven shaft geared together, a driving-finger for intermittently moving said film, and means co-operating with said shafts in their rotation to actuate said finger intermittently and, in the rotation of the drive-shaft, to skip, one or more times, the operative action of said finger on the film.

2. In an intermittent-motion device for actuating the film in a moving-picture machine, the combination of a drive-shaft and a driven shaft geared together, a driving-finger for intermittently moving said film, and cam-actuated means co-operating with said shafts in their rotation to actuate said finger intermittently and, in the rotation of the drive-shaft, to skip, one or more times, the operative action of said finger on the film.

3. In an intermittent-motion device for actuating the film in a moving-picture machine, the combination of a drive-shaft, a gear-wheel on said shaft, a driven shaft, a relatively smaller gear-wheel on the driven shaft meshing with the first-named wheel, a cam on one of said shafts, a driving-finger for intermittently moving said film, and means actuated by said cam, co-operating with said shafts in their rotation to actuate said finger intermittently and, in the rotation of the drive-shaft, to skip, one or more times, the operative action of said finger on the film.

4. In an intermittent-motion device, the combination of a drive-shaft, a cylindrical body on and reciprocable lengthwise of the shaft, a cam loosely mounted on said shaft to rotate independently thereof and engaging said body, means for driving said shaft and rotating the cam thereon at relatively different speeds, a pin on said body, a driven shaft, and a star-wheel on the driven shaft co-operating with said body and pin, for the purpose set forth.

5. In an intermittent-motion device, the combination of a drive-shaft, a cylindrical body on and reciprocable lengthwise of the shaft and provided with a pin and a slot adjacent thereto, a cam loosely mounted on said shaft, means for driving said shaft and rotating the cam thereon at relatively different speeds, a driven shaft, and a star-wheel on the driven shaft adapted to work in said slot and co-operate with said body and pin, for the purpose set forth.

6. In an intermittent-motion device, the combination of a drive-shaft, a cylindrical body on and reciprocable lengthwise of the shaft and provided near one end with a pin and a slot adjacent thereto, an anti-friction roller on the opposite end of said body, a cam loosely mounted on the shaft and engaged by said roller, means for driving said shaft and rotating the cam thereon at relatively different speeds, a driven shaft, and a star-wheel on the driven shaft adapted to work in said slot and co-operate with said body and pin, for the purpose set forth.

7. An intermittent-motion device comprising, in combination, a frame, a power-shaft, a drive-shaft journaled in said frame and a driven shaft, gears of different diameters on the power-shaft, relatively smaller gears of different diameters on the drive-shaft respectively meshing with said gears on the power-shaft, one of said smaller gears being loose upon its shaft and provided with a cam, a spring-pressed pin-equipped cylindrical body on the drive-shaft engaging said cam and reciprocable relative thereto, and a star-wheel on the driven shaft to co-operate with said body and the pin thereon, for the purpose set forth.

Inventor: Adolph F. Hamacek, Chicago, Illinois.

965,401. Projecting Apparatus. The object of the invention is to enable several images to be projected by an operator simultaneously, as in the dissolving lantern. The lamphouse is provided with three sets of condensers, one in front and one on each side, each provided with a projecting lens and slide carrier. The side lenses have mirrors to turn the beam of light toward the picture screen, so that three images may be thrown upon the screen at the same time from the same arc lamp. Carl E. Nilsson, New York, N. Y.

965,547. Automatic Vending Machine. Mathias J. Walther, Cleveland, Ohio.

965,574. Automatic Vending Machine. James Alexander Evans, Philadelphia, Penna., assignor of part to Edward W. O'Connor, of same place.

Another Theater for Louisville

The West Broadway Theater Company of Louisville, Ky., expects to finish its model moving picture and vaudeville house on the south side of Broadway at Eighteenth street, in that city, by February. Work on the structure is being pushed rapidly.

The builders say that when completed, it will be one of the finest places of amusement south of the Ohio river. It will cost $12,000 and will seat a few less than 500 people, so that it may come outside of the regular theater law, which would have required it to be fire-proof throughout. The building will be partially fire-proof. It will be amply supplied with exits.

Louisville's New Theater.

The dimensions of the building are 55 by 110 feet. The front of the structure is to be of green and white enamel brick. One of its features will be five large light globes in addition to hundreds of incandescent lights. S. P. Ostrander is the architect. Fred Dolle is the president of the West Broadway Theater Company, Fred Hoffman the vice-president, and Henry Reiss the general manager.

Pennsylvania Theater Must Remodel

The management of the Hippodrome Picture Theater, at Harrisburg, Pa., has been ordered to remodel its hall and comply with the Pennsylvania state law by Captain John C. Delaney, chief factory inspector, now that the supreme court has upheld the opinion of Judge Kunkel, declaring the statute constitutional.

Over a year ago Captain Delaney ordered the Hippodrome to enlarge its aisles, ordering in three 4-foot passageways. The A. L. Roumfort Company, owner of the house, refused, and obtained an injunction against the inspector to restrain him from enforcing the law. On the hearing to make permanent the injunction the plaintiffs, through their attorneys, Bergner & Gilbert, held that the law was unconstitutional, claiming it to be confiscatory.

Judge Kunkel sustained the law in an opinion now affirmed by the supreme court.

The Hippodrome will be compelled to put in three 4-foot aisles, which will greatly reduce its seating capacity. At present it has one wide aisle in the center and two narrow wall-aisles.

Sea Birds in Their Haunts

A Remarkable Pathe Film

JANUARY 20 Pathé Frères will release a film entitled "Sea Birds in Their Haunts." This is the second fil of their "bird life" series and is equally if not more interesting than its predecessor, which was entitled "Wild Birds in Their Haunts."

The film is beautifully colored and is one that can hardly be praised too much.

The interest which this sort of film creates as well as the value to the trade at large, is perhaps hard for those uninitiated to realize. It is an undoubted fact that films of this sort are really worth while, and every exhibitor should make efforts to secure them. They add a dignity and standing to the industry and to the theater that is very real, and do immeasurable good for the uplift of the business.

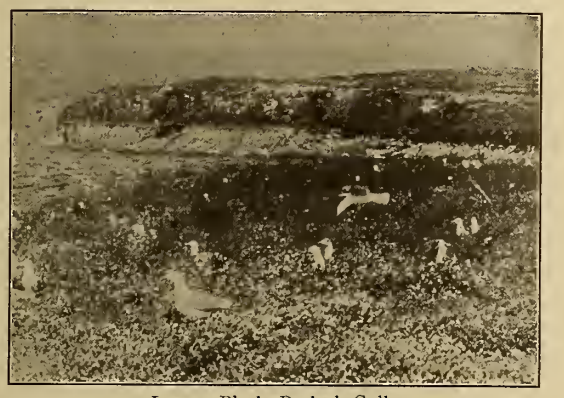

Lesser Black Backed Gulls.

Young Kestrels.

"Sea Birds in Their Haunts" was taken by Mr. Oliver G. Pike, as was "Wild Birds," and required fully as much patience to photograph.

In securing the pictures Mr. Pike went through some very trying experiences, a suggestion of which may be seen on the screen. Think of descending on a rope for eighty feet and being suspended over a precipice of 300 feet to get pictures of gannets. This is only one of the many arduous features involved in the making of such a picture.

However, it is not the making of a film that counts, but the picture itself. Yet behind the picture is the spirit of the maker. It is not of the picture we wish to speak beyond saying that it is a work of art, very interesting and extremely beautiful.

Perhaps the spirit of the picture may be expressed by saying that in making one part of it the photographer was obliged to remain perfectly still on a mountain side for nearly four hours, and during a storm to be finally rewarded with views of about two minutes in duration.

Reed Warbler Feeding Young Cuckoo.

The spirit that will lead to the making of pictures under these difficulties will lead to great things and Pathé Frères should be proud of their series. They are most interesting to look at; are a credit to their makers, and do a world of good in showing to the world at large the vast scope and excellent features of motography.

Gannets .

Dr. Arthur Korn, professor of physics at the University of Munich, whose experiments in long distance photography and the transmission of pictures by wire, attracted much attention a few years ago, exhibited before the Academy of Sciences in Paris recently his invention for synchronizing the phonograph and cinematograph. By means of this device the moving pictures appear to speak.

The Art of the Moving Picture Play

By Clayton Hamilton*

THE inventions of science serve frequently to broaden the domains of art by offering the artist new media of expression. The development of skeleton steel construction has given our architects an opportunity to imagine that new type of beauty in the art of building which has obtained consummate embodiment in the Metropolitan Tower. Photography, which began merely as a mechanical process, has developed into an art more subtle for handling elusive effects of light and shadow than even the major art of painting. The introduction of electrical illumination has revolutionized the art of stage-direction in our theaters. As new avenues of opportunity are opened to the artist by the march of science, the processes of the traditional arts are required to readjust themselves to meet the new conditions. The scientific invention of the kinematograph suggested the artistic invention of the moving-picture play—a novel type of narrative wherein a fictitious story is represented in pantomime by actors and reproduced by the kinetoscope; and the new art sprang at once into competition with certain of the previously established types of drama.

The domain of criticism is co-extensive with the domain of art, and should naturally be broadened to include those new provinces which the inventions of science and the consequent inventions of art have recently discovered and annexed. It will not do for the critic to ignore a new art because it is new or because its basis is mechanical. All art arises from the application of a mechanism; and the hoariest of the traditional arts was new at some time in the history of mankind. The critic of architecture must accept the skyscraper; the critic of painting must consider the new art of photography; and it is surely not logical that the moving-picture play should be ignored by our critics of the novel and the drama. A new type of narrative that has achieved such immediate and such widespread popularity as the moving-picture play must certainly be worthy of serious criticism. If we should learn nothing else from a study of its materials and methods, we should at least succeed in clarifying our ideas concerncerning those pre-existent types of narrative from which it has derived its processes.

THE FILMS AND SOME CLASSICS.

Even a casual study of the moving-picture play will convince us of the soundness of that principle of contemporary criticism that nearly every good play has for its basis a good pantomime, and that dialogue —the purely literary element—while not the least important, is at any rate the least indispensable, of the many elements which are compounded in that complex work of art, the acted drama. The kinematograph bereaves the drama of the spoken words; and it must be surprising to the literary theorists to learn how much is left—how vividly the essential elements of action, character, and setting may convey themselves by visual means alone. Pantomime has been recognized for many centuries as a legitimate type of drama; but it is safe to say that the variety and the extent of its adaptability as a means of story-telling were never fully understood until the invention of the kinematograph demanded of it an unprecedented exercise. The familiar French one-act pantomime entitled "La Main" has been reproduced by the flittering film, and is fully as effective on the screen as on the stage. Such a classic of the art of pantomime as that wordless drama in three acts, "L'Enfant Prodigue," devised by Michel Carré, which was revived this autumn at the Carnegie Lyceum by Mme. Pilar Morin, could be reproduced by the kinetoscope without any loss of dramatic effect and would furnish an interesting evening's entertainment. But even the spoken drama might, in many of its classic manifestations, be kinematographed without irremediable loss. Several of the melodramas of Sardou have already been successfully submitted to the process; and it is not impossible to imagine a wordless reproduction of even more eminent types of drama. Such a farce, for example, as "Le Médecin Malgré Lui" of Molière could easily tell itself through the medium of the moving picture and would still awaken laughter. Molière's humor always expresses itself through the situation or the character and never through the mere language of the dialogue; in all his plays there is not a single witty line; and humor which is thus visual, instead of auditory, in its appeal may be conveyed in pantomime. The screen scene of "The School for Scandal"—to choose an instance from high comedy—would remain clearly intelligible in all its necessary implications if it were acted without words; and if we desire an example from poetic tragedy, we need only consider that the final scene of "Hamlet" would still be thrillingly appealing if it were projected on the silent but animated screen. The only type of drama which is absolutely unavailable for the kinetoscope is that in which the element of action is entirely subordinated to the element of character and in which incidents are imagined off the stage for the sake of their subsequent psychologic effect on the people present to the eye—the type that is represented by the tragedies of Corneille and Racine and some of the social dramas of Ibsen and his imitators. But since the preponderant proportion of the existing drama conveys its message more by visual than by auditory means, it seems strange that more of our standard plays have not been reproduced in moving pictures. For some time we have utilized the phonograph to record the voices of our greatest opera singers. Why should we not also utilize the kinematograph to record the visual aspects of the acting of our greatest histrionic artists? This available invention should surely be applied to make a permanent record of such bits of acting, for example, as Mr. Forbes-Robertson's death scene in "Hamlet." That moment when his half-uplifted hands wave and flutter in the air, and his face is for the last time suffused with the ineffable smile that dawned over it in the first act at the phrase, "Methinks I see my father," and then the head sinks forward in sign that for all eternity the rest is silence—surely this, and many moments like it, should be re-

*From *The Bookman* for January, 1911.

corded, like Caruso's voice, before the living artist is stolen from the world.

FREEDOM OF NARRATIVE.

But, on the other hand, there is a sound critical reason why the moving-picture play should not confine itself to the reproduction of the ordinary spoken drama. In several important respects the moving picture is a more serviceable medium for story-telling than the regular drama; and it can achieve its most interesting effects by flinging emphasis upon such expedients of narrative as lie beyond the reach of the actual theater. The main advantage of the moving-picture play over the traditional types of drama is that the author is granted an immeasurably greater freedom in handling the categories of place and time. The modern play must confine itself to not more than three or four definite localizations; but a story told by moving pictures may change its place as frequently as the author may desire. He may arrange his tale in fifty scenes instead of four; and this is, technically, an immeasurable advantage. Instead of constraining his characters to meet at a certain place at a certain moment, he may visit them at different moments in the various places where they choose to be. In this freedom, the moving-picture play resembles those earlier types of drama which flourished before the stage restricted its range of narrative by adopting a definite scenic setting. Students of the history of the theater will discern a close analogy between the moving-picture play and that type of chronicle history which was developed in the early Elizabethan period and was utilized repeatedly by Shakespeare. The battle episodes of Shakespeare's histories, vivid with alarums and excursions, wherein the scene shifts momentarily from one part of the field of conflict to another, and the characters make a rapid transit before the eye, launching hasty, incoherent lines in passing, could be suggested more emphatically by the kinematograph than on the modern scenery-encumbered stage. Furthermore, the moving picture possesses a notable advantage over the contemporary regular drama in its ability to alter, in the fraction of a second, the point of view from which the story shall be looked upon. As soon as a character has passed through a certain door, the scene may be shifted from the room that he has left to the room that he has entered; and the eye may follow him all through a house from cellar to attic without any loss of time. The new art of the moving-picture play is the only one of all the many arts of narrative which makes it possible for the observer to follow with the actual eye the passage of a character through a mile or more of space. In this new form of artistic presentation, a person may walk, run, ride, drive, sail, swim, or fly for any distance, and yet be accompanied through his entire transit by the actual eye of the observer. This fact offers to the artist who devises a scenario for the kinematograph many possibilities of narrative which lie far beyond the range of the writer for the restricted stage of the ordinary drama.

TREASURE ISLAND AND THE FOREST OF ARDEN.

In this freedom in handling place and time and in shifting the point of view, the moving-picture play resembles the novel much more nearly than it resembles the regular drama. The solitary horseman, dear to Scott and Cooper, could not be shown upon the stage; but he might easily be represented on the screen. If we draw on our imagination, we may readily adduce a more emphatic illustration of this point. "Treasure Island," for example, could not possibly be dramatized for presentation in the regular theater, because the interest of the action is dependent on its rapid change of place from hour to hour; but the entire story, from the outset to the end, could be told in moving pictures; and many of the scenes, since their apeal to the imagination is mainly visual, would be even more effective on the screen than on the printed page.

In handling the element of action, the moving-picture play is more successful than the novel, since its appeal is made directly to the eye instead of to the imagination, and it is scarcely less successful than the drama. In handling the element of setting, it is overwhelmingly superior, not only to the novel but to the drama as well. In dealing with interiors, the moving-picture play remains on a par with the regular drama; but in dealing with scenes set out of doors, it passes far beyond the reach of the roofed and stationary stage. In the modern theater the Forest of Arden is nothing but a huddled conglomeration of canvas trees; but in the moving-picture play, scenes like those between Shakespeare's idyllic lovers may be performed in an actual forest, drifting from place to place among trees that sift the sunlight and flutter their leafy branches in the breeze. The kinematograph is especially successful in rendering effects of moving air and water. On the stage, the sea can be suggested only by a crude and bungling mechanism; but in the moving-picture play a scene may pass upon an actual sandy beach, with league-long round-backed breakers creaming on the shore. Boats always look silly on the stage; but the kinematograph may fluently represent the paddling of a canoe past bend after bend of a rippling river. Animals, also, which can never be trusted to behave naturally in the theater, may be used as important agents in the plot when the scene is conducted actually out of doors. To the mind of most contemporary artists the element of setting is not the least significant of the three necessary elements of narrative; and it is therefore an exceedingly important point that criticism is forced to concede that the local environment of a story may be exhibitied more directly and more vividly in the moving-picture play than in any of the older types of narrative. It is only in handling the element of character that the new art is at a disadvantage in competing with the novel and the drama. The many expedients that the dramatist and the novelist may use for delineating character are reduced, in the moving-picture play, to one. What people are may be suggested only by what they do: by their deeds, and only by their deeds, we know them. In drawing character, the moving-picture play suffers a strict confinement of range in consequence of its inability to use the spoken word. Only a small minority of those innumerable characteristics which are compounded into any individual human temperament express themselves naturally in action which is obvious to the eye. Here then—in handling the element of character—lies the weakness of the moving-picture play considered technically as a type of narrative—just as, in handling that other element of setting, lies its strength.

STEVENSON AND THE STORY.

This analysis makes it possible for us to define the type of story which may be most competently repre-

sented by the kinematograph. Obviously the most desirable narrative material for a moving-picture play is material in which the elements of action and setting are paramount and the element of character subsidiary —in other words, a story in which incident treads upon the heels of incident and the action rushes headlong through a hurried succession of objective events, set preferably out of doors. It will be noticed at once that, whereas this definition utterly fails to fit the modern regular drama, it almost exactly fits the traditional romantic novel of adventure. If we revert to an illustration that has already been adduced, we shall observe that this definition of what is necessary in a moving-picture play points directly to that traditional type of narrative that Stevenson revivified in "Treasure Island."

In fact, a re-reading of Stevenson's "Gossip on Romance" will give us a very vivid sense of the sources of the interest and charm of which the moving-picture play is particularly capable. What Stevenson says in praise of the romantic novel of adventure may be applied with equal justice to that new art which did not spring into existence till after he was dead. "The story," he says, "should repeat itself in a thousand colored pictures to the eye. It was for this last pleasure that we read so closely, and loved our books so dearly, in the bright, troubled period of boyhood. Eloquence and thought, character and conversation, were but obstacles to brush aside as we dug blithely after a certain sort of incident, like a pig for truffles. For my part, I liked a story to begin with an old wayside inn, where, 'toward the close of the year 17—, several gentlemen in three-cocked hats were playing bowls.' A friend of mine preferred the Malabar coast in a storm, with a ship beating to windward, and a scowling fellow of Herculean proportions striding along the beach; he, to be sure, was a pirate. . . . One and all, at least, and each with his particular fancy, we read story-books in childhood, not for eloquence or character or thought, but for some quality of the brute incident. . . . Conduct is three parts of life, they say; but I think they put it high. There is a vast deal in life . . . where the interest turns . . . not on the passionate slips and hesitations of the conscience, but on the problems of the body and of the practical intelligence, in clean open-air adventure, the shock of arms or the diplomacy of life. With such material as this it is impossible to build a play, for the serious theater exists solely on moral ground, and is a standing proof of the dissemination of the human conscience. But it is possible to build, upon this ground, . . . the most lively, beautiful, and buoyant tales"

Here, in the words of a great artist in narrative, we have a clear and comprehensive statement of the possibilities that lie open to the maker of the moving-picture play. He cannot contend with the dramatist in working out those problems of conscience which confront the will; he cannot compete with the novelist in analyzing characters; but he may tell, with a vividness beyond the reach of their less visual expedients of appeal, "the most lively, beautiful, and buoyant tales," in which the interest is centered not in "eloquence or character or thought" but in "some quality of the brute incident."

It is evident, therefore, that the art of the moving-picture play is not an art to be despised or ignored by serious criticism. It represents, in fact—to look upon it from the historical point of view—a reversion to an earlier and more perennially refreshing mood of narrative than that which latterly has assumed dominion over the novel and the drama. The moving-picture play carries us back to the boyish age of the great art of telling tales, when stories were narrated nakedly as stories instead of being sicklied o'er with the pale cast of thought. One can hardly imagine Mr. Henry James devising a successful scenario for the kinematograph; but the Shakespeare who wrote "Richard III," and the Homer who wrote the "Odyssey" would experience no difficulty in fulfilling the requirements. It is only very recently that the masters of the art of fiction have made war upon the optic nerve and exalted the subjective over the objective. Our modern interest in those intimate phases of character which refuse to reveal themselves in action is, certainly, sophisticated and excessive. It is therefore with a feeling somewhat of relief that we notice that the newest of all the arts of narrative—the moving-picture play—disembarrasses its stories of psychologising, and tells them in the free and boyish spirit that vivified the epic, the drama, and the novel throughout the centuries before the world grew old.

It is not at all surprising that the moving-picture play has driven out of existence the cheap type of popular melodrama. The reason is not merely that the moving-picture show could undersell the regular theater and offer a performance for five cents instead of for ten, twenty, and thirty. In the whole history of the world, no art, however cheap, has ever annihilated a more expensive art which was basically better than itself. The real reason for the triumph of the moving-picture play is the purely critical reason that it offered a more artistic type of narrative than the old popular melodrama. In cheap melodrama, all that was worth while was the vividness and the variety of the incidents; the character did not count, except as puppets in the plot; and the dialogue, crude and frequently absurd, was more a bother than a help. In abolishing dialogue the moving-picture show relieved the cheap drama of its weakest element; it could suggest character with less obvious falsification than the actual popular drama; and it could easily excel it in the projection of incidents, both on the score of variety and on the score of vividness.

The thing that is surprising is that, except in France, the moving-picture play has not more fully availed itself of those artistic oportunities which are open to it, and thereby raised itself to competition with more refined and more expensive types of drama than were set forth in the old ten, twenty, and thirty cent theaters. Many of the moving-picture plays which may now be seen are good; but only a little imagination is needed to see that they might easily be made better. Certain reports in the newspapers have indicated recently that the popular interest in moving pictures throughout the country is declining. If this be true, the new art must bestir itself to fulfill more completely than heretofore the high artistic aims of which it is indubitably capable. It is too good an art for the public to lose; and it can retain its popularity if it labors to deserve it.

Possibilities in Industrial Pictures

By Watterson B. Rothacker

"Our grand business is, not to see what lies dimly at a distance, but to do what lies clearly at hand."

THE ultimate attainment of moving pictures undoubtedly lies dimly at a distance, but decidedly is it true that the opportunity to take advantage of their power as an advertising factor lies clearly at hand.

At this very writing more than a few advertisers of national importance are reaping a publicity harvest because with commendable enterprise they have backed up their judgment by immediate action with the result that their moving picture campaign is not only advertising their product or purpose with decided effect but is a material aid to the sales department, possessing as it does, such conclusive powers of demonstration.

It must be admitted, however, that to many—too many, in fact—"moving pictures as an advertising medium" sounds prophetic rather than practical. A commanding view of this situation discloses an inexcusable state of indecision on the part of some advertisers who agree as to the value of moving pictures in publicity and advertising work, and as a sales adjunct, but who, in this instance, seem to be practically unprovided with that essential of success which distinguishes between the leader and those who follow. And yet the most staid, tied-to-the-post rut-traveler freely admits with vague affability that the tomorrow of the moving picture business will reveal it associated with the profession of the advertising expert to a great extent. But why slight the opportunities of today while anticipating those of tomorrow—which is ever distant? Moving pictures are the newest thing in advertising. Inventive minds are every minute discovering something new in them and improving their present mechanical construction, but in so far as their practical use is concerned they have outgrown the experimental stage.

The manifold advantages of animated photography for purposes of comprehensive and authoritative illustration are at once manifest; quite so are the advertising benefits derived from the right sort of illustration. As a matter of fact moving pictures, to all intents and purposes, have a third dimension which enlivens their broader scope, stirs the pictures with realism and, in addition their re-production is inclusive to the extent possible in any photography.

Watterson B. Rothacker,
General Manager of the Industrial Moving Picture Company.

No single picture can adequately describe the average subject, and in many subjects "still" photography is unable to represent that which is desired. This is true where the stationary scene or object portrayed in the ordinary photography is in itself and alone, but a pointless unit and insufficient unless depicted in smooth sequence and exhibited in motion descriptive of the whole. Please don't misconstrue this as a statement that inanimate photography has not a high value, has not accomplished much, and is to be relegated to the "has been" asylum by moving pictures. We acknowledge the importance and recognize the standard in common with the rest of the world. However, we maintain that moving pictures as a descriptive force are in a class alone, pre-eminently qualified and superior as a means of realistic illustration. We refrain from further discourse on this point to avoid being considered a tiresome expounder of the obvious.

MOVING PICTURE POSSIBILITIES OF TODAY.

To keep pace with advancing and progressive tastes the up-to-date advertiser must seriously regard moving pictures because among other things—

Moving pictures are the most subtle and effective form of advertising in the world; by them the consumer's buying instinct is aroused while he is being entertained.

Moving pictures are universally understood; they appeal to all who have eyes to see.

Moving pictures excite interest, impart information and truthfully demonstrate; they attract, entertain, explain and convince.

Moving pictures are independent of the imagination —they are sufficient unto themselves.

Moving pictures are popular the world over; their universal introduction has been accomplished.

Moving pictures offer the advertiser the means with which to illustrate his proposition in a comprehensive manner possible by no other method.

"There's a reason," all right, all right, and more than a few, why moving pictures are in the advertising field. As a publicity force they are reliable, efficient and practical. The claims made for them may sound extravagant but they will bear close scrutiny. In fact the advantages of moving pictures to the advertiser loom up more boldly and in more pronounced form as their investigation progresses.

Now for the other side of the story. How does this vaunted medium appeal to the public? We will let the figures which tell us in millions how many people patronize moving pictures answer that question. Also we point to the attitude of this great public, which indicates that it is in a most receptive mood for edifying innovations.

The combination of moving pictures and advertising is a matter of pure assertion which will withstand sane argument. The advertising advantages of the union are actual as well as prospective. The possibilities expand with their investigation and more are disclosed with each realization.

To be equal to the impending demand and prepared to cater to this inevitable market the moving picture manufacturer can well afford to investigate the situation. To be able advisedly to take advantage of the opportunities offered by moving pictures the advertiser must have a certain knowledge of the conditions governing the moving picture business.

Now there is no question as to the ability of moving pictures to display the operations of a machine, the agricultural activities of a farming community, feats of engineering construction, the opportunities offered by a city or territory to the prospective resident and investor, the alluring places reached via a railroad or steamship line, the comforts and delights of travel, etc. The question which arises is how to produce these subjects so that their advertising messages will be delivered successfully. This, of course, involves actual labor and skill in production, and selection, and use of the various avenues of distribution.

These two important problems are the hinges upon which swing the door leading to the goal predicted for moving pictures in advertising. Their solutions are various and are worked out in various lines. The knotty spots in the "would" of the manufacturer differ from those which confront the advertiser who seeks mere publicity and has a pretty subject to present. Each requires an individual treatment.

Advertising a product is intended to influence its sale or use. When a man advertises mining machinery he talks to those who are interested for more than reasons of curiosity. An advertiser who has farm machinery to sell appeals to the farmer. The municipality or state inaugurating and maintaining an advertising campaign does so to attract the notice of prospective residents and investors. The railroad seeks to catch the eye of the traveler and to create a desire to travel. In fact, the manufacturer or city, the man who has locomotives to sell or the firm dealing in household necessities or food products, are, in common with every advertiser, seeking their particular market. They are spending their good hard coin of the realm to create prospects and then convert the prospect into a customer. To do this expeditiously they direct their persuasive powers of explanation, demonstration and argument at places and people whom, it is reasonable to assume, would be most likely to respond in that material form which accomplishes the object of the advertising.

When an advertising appropriation provides for moving pictures the money to be so devoted should be expended with the same thought and care as payments for billboard, street car, newspaper, and magazine space. Advertising success is primarily dependent on the class of people the "copy" reaches. That is the reason we have trade papers, locality distribution and class publications. It takes an expert to take all of these important things into consideration and operate efficiently. That is why we have agencies and advertising specialists.

This holds good in moving picture advertising. In subsequent articles we will endeavor to take up moving pictures and their advertising value to special lines of business. We will, in this regard, abide by our preference to discuss moving pictures in the broader sense. In doing this the political angles of the present film situation will be considered but not encroached.

Publicity Pictures for California Wines

A thousand feet of film devoted to the subject of California wines is a modern example of motion picture publicity, according to *Advertising and Selling.*

You see the picking, the hauling, the crushing. One scene in particular is certain to prove a revelation. It shows the novel harvesting of grapes at Cucamonga. The whole 3,500-acre vineyard is covered with a network of tracks and the grapes are dumped by the pickers into small cars, which are hauled to the winery by a tiny engine. The climax of the picture is reached when a dozen cars of grapes are, one by one, dumped onto the endless augur conveyor that rushes the grapes up to the crusher. You marvel at the manner in which the stems are mechanically rejected and smack your lips as the stream of fresh juice gushes from the immense crusher.

These moving pictures are being shown in half a dozen parts of the United States. Ultimately they will be projected in every important city of every state. They are not intended to boost any particular brand of wine, but serve as an excellent medium for acquainting the American people with the importance of California's viticultural industry. As a curtain raiser, so to speak, for an elaborate advertising campaign they could not be excelled. Anyone who reads or hears of their choice wines later will be sure to remember the striking scenes and the tons and tons of grapes he saw in the pictures.

St. Paul Wants Publicity Pictures

An effort to have St. Paul shown to the world by motion pictures will be made shortly.

The movement to advertise the Minnesota capital city on moving picture films originated with the Hotel and Restaurant Men's Association of that town.

A meeting of the association was called and the matter presented to the members in a formal manner. After the hotel and restaurant men have acted the other commercial organizations will be asked to co-operate.

It is the intention of those interested to have the matter taken up with the moving picture concerns and if necessary defray the expense in having the pictures made.

An example of what benefit the commercial interests would derive from motion pictures of St. Paul has been seen in such an exhibition of San Francisco.

It is claimed by the hotel and restaurant men that St. Paul views will make as interesting a panorama as the moving picture machines could show.

Some Questions Answered

By William T. Braun

In this department, answers will be given to questions upon any subject in connection with the conduct of moving picture exhibitions, the operation or construction of moving picture machines, the making of pictures or films, or any questions pertaining to the amusement business which can be answered without specific reference to any person or company. Questions are invited, and will be answered as promptly and as fully as possible.

THE OPERATING ROOM.

Please explain the best position in the theater for the operating room, its size, and arrangement of machine, etc. Also what supplies are necessary to have on hand in the room.—ARCHITECT.

THE location and size of the operating room depends upon the dimensions of the theater, the arrangement of exits, and seats, the height of the ceiling, etc. City ordinances in various parts of the country make certain requirements which must be considered, and the operator and manager also have some ideas which must be regarded.

Without doubt the best place for the operating room is in the middle of the front of the theater. If the cashier's box is in the middle it can be built up to the ceiling, and the upper part can be used for the operators' room, so that but very little of it will need to extend into the theater. If the screen is in the middle of the rear wall the operating room should be in the middle also; otherwise the machine cannot be placed so that it will be directly opposite the screen. This is necessary, because if the rays of light from the lens do not strike the screen at right angles the top and bottom lines of the picture will not be parallel; that is, one side of the picture will be higher than the other.

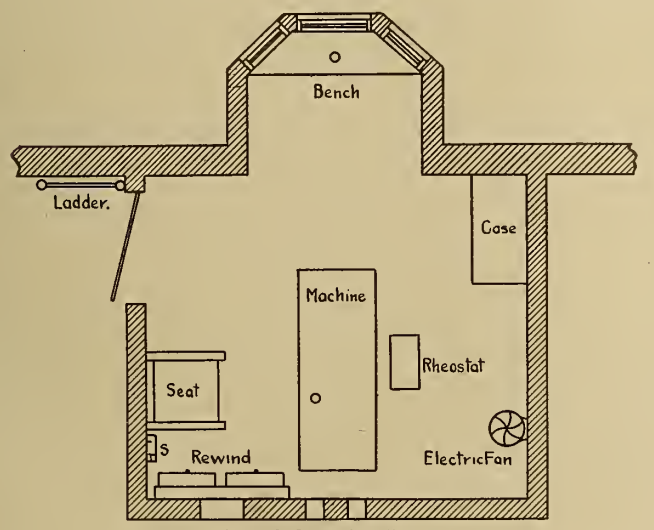

Plan of Operating Room.

The size of the operating room depends on how much room you can spare. There should be plenty of room to get at the machine from the sides and rear, and also room for a work bench and other accessories mentioned further on. The larger you make the room the less quickly it will become heated. If there is a flat above the theater the ceiling of the room cannot be made any higher than that of the theater. But if you have a special building the ceiling of the room can be carried up to the roof joists. The room ought certainly not to be less than six feet high and six feet square.

In the accompanying sketch a good layout of the room is given. This room is seven feet long by nine feet wide in its greatest width, extending over the box office and but six feet into the theater. Most city ordinances require that the room be fireproof. The room is generally framed in wood and covered with sheet metal. All openings which lead into the theater must be covered with fireproof doors on spring hinges, so that they will remain closed when in a normal position. The ladder to the room can be placed to the side of the door as indicated on the sketch. If the room can be built with the bay an abundance of window space can be had in the room giving good light and ventilation, something that will be appreciated by the operator. The windows should be hinged so that they may be opened in summer. A ventilator should be placed in the ceiling leading to the roof if possible. The only other openings necessary are the peepholes. One will be required for each objective lens on the machine, and one large one for the operator so that he may watch the screen while in a sitting position at the machine. The floor should be covered with a heavy linoleum or rubber mat.

The location of the machine, bench, seat, etc., are shown in the sketch. The machine should be placed in the middle of the room, the head of it about one foot from the wall. The rheostat is on the floor beside the lamphouse, and the switch controlling the machine on the wall at "S." The bell or buzzer should be beside the switch. One of the theater seats placed with the back toward the wall may be used for the operator. The seat can be raised when not in use, leaving plenty of room to get at the machine. The rewind apparatus for the film is conveniently placed on the front wall, so that the operator may rewind the film and run the machine at the same time from his chair. A workbench or shelf under the windows where plenty of light is available, is a very handy thing. An electric fan is an absolute necessity in every operating room, and its cost is easily repaid by the better service that the operator will perform. If the fan is placed as indicated it will blow the warm air from above the lamphouse out of the windows. On the wall a case should be placed containing about eight or ten large sized pigeon holes. These are to be used for tools, carbons, slides, and various things. Below this case may be kept an iron box to store films, although it is better not to keep any more films in the operating room than are used for each show. Two incandescent drop lights should be placed at positions marked. One of these having a long cord should be used anywhere on the machine. The other is over the work bench.

The operator should have the following tools: At least two pliers, with wirecutters and long tape-wound handles; two or three sizes of screw drivers, files of various sizes and a pair of scissors for repairing films.

The necessary supplies should include carbons.

These can be obtained pointed, or they may be pointed by the operator with a file or wood rasp. He should also have some film cement and a brush for applying it. None but the best sperm oil should be used for lubricating the machine. Fuses of the various sizes used in the theater, blank film for attaching as header, and copper wire of various sizes. An extra set of asbestos covered wires with attaching lugs should be kept on hand ready to attach to the machine.

The following extra machine parts should be kept on hand: Carbon holders or fingers with thumb screws for the lamp; a set of condenser lenses; a strap or belt for the take-up attachment, and a reel cotter for holding the lower reel on the spindle. These supplies with the announcement slides can be kept in the wall case where they will be handy for any emergency. which may arise.

LIGHT FOR PROJECTING.

I read with interest the article "Arc Lamps for Projection" by Henry Phelps Gage in your recent issue. I would like a little more information on the subject if you can give it to me. I have alternating current, 110 volt, 60 cycle. Am using a Compensarc. If I use it with switch on point No. 2, the carbons burn all right, but the light is not strong enough and if I use point No. 3 (60 amperes) the light is better but I can't hold the arc; carbons soon burn into bad shape and I have poor light.

Now I want to obtain the best light possible. The article seems to favor the rectifier. I would be pleased to learn if a rectifier would be of any advantage to me over my present system, in regard to quality and strength of the light and economy. Of course the article says it would, but I would like to get the exact figures.—W. McN.

WE cannot help thinking that you are not using a grade of carbons suitable for your conditions. We take it for granted that you have examined your connections and found them all right. Let us know what carbons you are using and we will try to help you further.

With the switch of the Compensarc on point 2, there is probably a current of 40 amperes on the arc, and with the switch on point 3 the current is probably between 50 and 60 amperes. This will vary with different conditions of wiring, size of transformer, etc., but we think you will find the above figures are approximately correct.

The trouble with the arc, probably, in this case, when the switch is on point 3, is that you try to run your carbons too close together, causing a toadstool to form on the carbons, which of course obstructs the light. There is no question but that direct current is the most satisfactory. If you will refer to the article mentioned you will note that the curve in Fig. 5, entitled "Relation Between Current and Light in Inclined Electrode Lamp," shows that at 40 amperes alternating current the candle power is about 2,600; at 50 amperes, about 3,600; and at 60 amperes, about 4,600. When using a rectifier, the candle power at 30 amperes direct current is shown to be over 8,000, which is more than enough for work in a moving picture theater, and will give a good, clear, sharp light which will take care of practically any film that may be shown.

It is a fact, however, that the manufacturers of the Compensarc have installed a great many of these devices in picture theaters, and have very few complaints.

We shall be glad to hear what results you get if you make any changes.

Banquet by Denver Princess Company

The Chateau Lafayette, Denver, Colorado, was the scene of an enjoyable banquet given by the management of the Princess Amusement Company, of that city, as a slight token of their appreciation of the efforts and assistance of their employees and friends in the successful results obtained in the new Princess venture, launched October 11, 1910.

The managers of their various other theaters were also present. Arch Gifford represented the Theatorium, Denver; Frank Kelley represented the Bijou, Denver; M. C. Farnsworth represented the Lyric, Cheyenne, Wyoming. Owing to the distance, the managers of Colorado Springs and Wichita, Kansas, houses were unable to be present.

Mr. Greaves was unanimously chosen as toastmaster. The selection proved him to be the right man in the right place.

Among the others present were H. T. Nolan, G. H. Greaves, E. A. Shields, J. Gerbose, Bud Graham, C. E. Merter, G. H. Clark, G. A. Stewart, B. Pepper, J. L. Durkee, S. O. Erickson, Arch Gifford, Frank Kelley, A. P. Markey. A very enjoyable evening was spent, and good-fellowship prevailed until the last word was spoken.

A vote of thanks was given to the Princess Amusement Company by those present, which was responded to in a few well chosen words by Mr. Greaves.

A vote of thanks was also given to the William H. Swanson Film Company for its efforts in providing the service, which in no small measure brought about the results obtained. This was responded to by Mr. Nolan in an appropriate manner, in behalf of the Swanson Company.

Uses for Colored Pictures

It requires little imagination to realize the enormous possibilities of the moving-picture machine plus color-photography in the education of the immediate future. Boston has long been accustomed to illustrated travel lectures, and many industrial processes have been perfectly reproduced by means of moving pictures, while the same agency has been used in Germany to illustrate the functional workings of man's internal organism. As valuable for educational purposes as almost any of these things, and more fascinating than most of them, will prove the colored pictorial representation of botanical processes. Many of these processes are far too slow in nature to be studied to advantage by the unassisted human eye, but the motograph, using films carrying records of the processes taken at suitable intervals, accelerates such processes in reproduction, with the result that the spectator sees the plant grow, the bud burst, expand, and go on to the condition of maturity in a few minutes and as if by magic. The late Hamilton Gibson, a close observer and an ingenious inventor, contrived a system of movable pasteboard mechanisms on a large scale in order to illustrate his fascinating lectures on the cross-fertilization of flowers, but since his untimely death no one seems to have been found to carry on the useful work which he thus began. A hint might be taken from his contrivances, however, and the processes of instantaneous photography and color-photography could be used to advantage in the vitascope for illustrating the subject that he seemed likely to make popular.

Recent Films Reviewed

His Wife's Swfethearts.—Biograph. Rapid and expressive action and an ingenious plot combine to make this photoplay a side-tickler. The piece is good in general and in detail, many deft touches adding zest and snap to the laughable situations. The leading role is taken by that accomplished *farceur* who has contributed so materially to the success of a long line of Biograph comedies. Not knowing his name, let us call him the American Max Linder.

After the Ball.—Biograph. This film and its companion on the same reel form a brace of farce-comedies that are hard to beat. They stimulate the kind of laughter that ripples forth with irresistible pressure, and though broadly farcical with considerable rough and tumble, there is nothing about them that demands palliation or apology. Nobody minds so-called slap-stick action when there is logic and strong feeling behind. We feel the wife has sufficient reason and excuse for whacking her errant spouse with the rolling pin. She was wrought up to a pitch where feeling must relieve itself in action. It is only when slap-stick is lugged in for its own sake, that it becomes offensive. The verve and buoyancy and collective inspiration with which the Biograph forces present farce is a never-ceasing source of delight and admiration. That they do much fine work in all kinds of drama everybody knows, but in no line do they come so near to the peak of perfection as in farce-comedies. The secret of this success resides in no single element but in several. In the first place the plot itself is ingenious and interesting with plenty of wit in the foundation, and this serves to combine a series of episodes each of which might be described in the foregoing terms. The invention of the parts is no less ingenious, interesting and witty than the invention of the whole. The incidents are worked up with a wealth of expressive detail some of which carry forward the action and some of which, having no direct relation to the plot, serve to reveal the mental state of the characters. It is in this last respect where the Biograph comedies are especially successful. The players are constantly expressing their thoughts in pantomime, and by this we mean something more than the usual facial and manual gesticulations, we mean pantomime in the fullest sense, thought and emotion springing into action. A good example of this is to be found in "His Wife's Sweethearts," where the sailor, after wiping the earth with the meddlesome husband, coolly lifts a cigar out of the vanquished man's pocket and marches off like a victorious game cock with the cigar perked between his lips. This adds a finishing touch to the husband's humiliation and sums up the meaning of the whole scene. It is this kind of pantomime which is so effective, and with which the Biograph comedies are so generously supplied. And then the actors pull so well together; there is action, always action, but they feed to one another at the proper instant, thus focusing the attention and preserving the center of interest. This concerted team-work means arduous training and careful preparation, but the effect on the screen seems free and spontaneous, which is the effect that characterizes all good art. There is to be noted among the Biograph players an exceptional abundance of that magical quality known as *esprit de corps,* and this conduces to magical results.

A Western Night.—Edison. There is more refinement in this Western comedy than is usually to be found in photoplays of that description. The protagonist is a genteel young lady from the East and the comedy arises from her qualms and trepidations experienced during a night passed in a rough Western hotel. Having heard, possibly from photoplays, of the awful things that happen in the West, she is prepared for the worst, and barricades her bedroom doors as if for a desperate siege. Things do happen for a while, or seem to, owing to certain noises emanating from an adjoining bed room, where a native son of the West is making his usual preparations for the night accompanied by a running obligato of oath and expletive. The young lady is correspondingly terrified, but mustering up courage, peeks through the keyhole and discovers the rough customer on his knees saying his prayers. This touching spectacle reassures her and she returns to bed with a peaceful mind. It will be seen that the complication is a mental one, based on psychological reaction, and therefore of the highest type. It is also a drama without dialogue and therefore especially suited to the photoplay medium. Another merit is the close observance of the dramatic unities, time and place. After a short introductory scene in the East, the stage time becomes synchronous with the actual time, and the events are localized in one place. The dramatic unities are no longer compulsory to stage technique, but they are always admirable in that they help to achieve dramatic effect with the greatest economy of means. They undoubtedly help to give this photoplay its appearance of neat and tidy workmanship. The acting of the young lady shows polish and skill and the whole effect is high class.

The Fire Department of New York City.—Edison. This film is even more interesting than the Police Force release. The action is more spectacular and at the same time more natural, seeming to be not so obviously arranged for the occasion. The final picture, showing the fire-boat with all streams going like an electric fountain, is a spectacle of thrilling beauty.

A Runaway Engine.—Kalem. The girl's exploit is undoubtedly daring but loses much of its exciting effect because the audience is not made aware of her purpose. We know she intends to save the president's special, but just how is not clear, and we do not learn until it is practically accomplished. We follow her wild ride sympathetically but our suspense is vague and not intense enough to be exciting. Too bad the sub-title editor did not see fit to explain matters more fully because the incident seems highly sensational in retrospect. Truly a daring and dangerous leap on the part of the leading lady. The plot is rather worn but serves well enough to introduce a sensational incident, which is all it was intended to do.

An Intrigue.—Pathé. The value of this film lies in the beauty of the material features, the costumes and settings and coloring. The drama is a rather high-flown affair, stagy and not overly convincing. The characters are vaguely sketched and motivated, all but La Savelli, who is enacted by an actress of evident ability and handsome appearance, but somehow fails to win much sympathy. We accept her tragic fate with entire equanimity. The trouble lies with the plot, which lacks meaning and vital relationship to life. But on the other hand the production is very beautiful and fills the eye with pleasure. The second empire period is vividly suggested and, among other fine scenes, we get a vision of a ball-room filled with hoop-skirts (ladies inside) forming a gorgeous pageant. The coloring of course adds to the beauty of things. The film is quite pleasing to watch and to gain the fullest pleasure one should just look, and swallow the plot whole without attempting much mental digestion.

Ramona's Father.—Selig. Genuine local color endows this melodrama with convincing effect. The action is violent with passions uncurbed but it all seems to go with the landscape. It is a Mexican subject with plenty of *chili con carne* flavoring. The actors play their parts with spirit and all goes well. The southern California scenery creates a vivid impression with its splashes of sunshine and suggestion of withering heat.

The Argonauts.—Selig. It isn't often that we find the villain of a photoplay turn about and become the hero, but so it happens here. He was a deep-dyed villain too, with a long drooping mustache and four aces up his sleeve. But he underwent a sudden transformation through love, and the heroine marries him though knowing he was an ex-card sharper whom she had exposed while attempting to cheat her brother. That she should love and marry him is not unplausible, for he had the manners of a gentleman and was good to look upon, but it seems a sweet reward for villainy and is decidedly unconventional for a photoplay, where the villain generally gets what is coming to him. The drama is not very coherent, and the last half lacks the element of suspense. It is fairly interesting, none the less, and presented in good style.

A Mexican Romance.—Eclipse. If it had not been for the title and a costume or so, one would never have suspected that this was a Mexican subject. To be sure the father ges-

ticulated extravagantly and otherwise performed in hot southern style, but this should be charged to bad acting rather than to Mexico. It is essentially a European drama of a very sentimental character with a hackneyed plot and insufficient motives. The dream episode is thrown in to draw tears, but doesn't. Credit must be given to Eclipse, as usual, for smooth photography and for settings that are fine but non-Mexican.

Coaching in Devonshire.—Eclipse. Here is a motographic medley that has small right to pass under the given title since coaching in Devonshire forms a very small part of the show, only one picture, perhaps two, being concerned therewith. The rest is what you will, from a chair made of horns to a dashing brook. A "Ramble in Devonshire" would be a more inclusive title. The pictures are clear and afford interesting glimpses of English life. It is questionable, however, whether anything so set and immobile as a horn chair is just the proper subject for a motion picture. One exposure would show it just as well.

Drama of the Engine Driver.—Ambrosio. This drama is a lugubrious affair of unmitigated woe and melancholy. Such depressing subjects can scarcely be called entertainment, and they serve no other good purpose. It seems a mistake to import them. They may please European audiences but are scarcely in harmony with the American spirit. The production is quite good, especially the railroad wreck where by dint of semi-darkness and a general haze effect, a pile of lumber and canvas scenery is made to take on the veritable appearance of a demolished railroad train. An American producer would probably have wrecked an actual train to achieve this picture, but the effect would have been no more convincing and far less artistic.

Grandpa's Pipe.—Ambrosio. This film shows a young boy smoking his first pipe with the usual results. The climax comes where he vomits into his grandfather's hat. The picture is enlarged so no detail is lacking. Further than to state that the young actor gave a very realistic performance, no critical comment is necessary.

The Toymaker, the Doll and the Devil.—Edison. A fantastical comedy, mildly amusing. That a girl could disguise herself as a dancing doll and deceive the doll's own maker, and that a young man could disguise himself as Mephistopheles and cause two grown people to believe that he was the Devil, looks more plausible in print than it does in motion pictures. The earthly aspect of the actors all but kills the fantasy of the theme. The acting was brisk, however, and embellished with much intelligent pantomime. If the film falls short of success, it is due to the impracticable nature of the subject.

The Rival Dramatists.—Selig. An amusing travesty of a contemporary *cause celebré*—amusing, that is, to those who already know something of the subject, but bewildering and possibly irritating to those who don't. That is the trouble with imitations and burlesque, they seldom have any point except to those who are already familiar with the subject. It is the dullest entertainment in the world to watch a take-off on something that one knows nothing about. The number of photoplay patrons who know anything about the Rostand-Gross imbroglio will be few and far between; consequently one might venture to predict a doubtful popularity for the film, were it not for the purely spectacular and trick effects which will be sufficient to save it. The cock fight was truly amusing and held something more than a burlesque interest because of the game little rooster. The "wireless" message also commands attention for the novelty. The Chanticler episodes are more doubtful; they are well done but the meaning must be obscure to those who are not acquainted with the book. The actor who played Rostando made up with an excellent resemblance to his prototype.

In the Days of Chivalry—Edison. This photoplay goes back to early medieval times for its temporal and scenic backgrounds, and with considerable success. It is no small undertaking to recreate a bygone era, especially when it is such a remote and romantic era as that of Aucassin and Nicollet. All our previous conceptions of that era have been gained through idealistic channels, principally through art. We have gained them from paintings and tapestries, from poetry and romance. Even history is colored by rhetoric, which is only another name for the *art* of writing. That dim distant era has long since been gathered to the realm of the ideal, and to show it in a form so realistic as the photoplay is like tearing it away from its long home and haling it forth into the cold light of day. Disillusionment is bound to result, and consequently more or less of disappointment. To say that the Edison company preserved many illusions and spoiled few is to imply a large measure of praise. The most disappointing scene was that which obviously invited the heaviest applause and cost the greatest amount of effort—the one before the castle gate. It was a notable feat of stage carpentry, but after all looked squat and artificial, and having seen real castle backgrounds in foreign films, the odious comparisons inevitably followed. Other scenes, some of which were scarcely less pretentious, acheived a more beautiful and satisfying effect. The costumes were of excellent appearance and substantiality, fitting their wearers even down to the subordinate members of the cast, who, by the way, were neither scrawny nor haggard, like ordinary "soups." One of the pleasant memories of the film is the fine performance of the leading actor. As the prince, he brought dignity and courtliness to the portrayal, and put up a handsome appearance in his various fine costumes.

In Neighboring Kingdoms—Vitagraph. A pretty, romantic comedy laid in olden days. The settings are lavish and beautiful and characterized by great depth, giving the pictures an appearance of reality and substance. This endeavor to get away from shallowness and constriction of scene is often noted in Vitagraph releases and deserves praise. Would that this practice were adopted by film-makers in general! It would add greatly to the effectiveness of photo-plays.

The Count and the Cowboys—Essanay. A lively Western farce that keeps the laughs coming from first to last. The French count is played in vivid burlesque style by our old friend Lank, and the cowboys afford an excellent foil for his fopperies. It is a study in contrasts, and there is doubt if a sharper, more effective contrast could be found than between a French dude and an American cowboy. It is a very funny contrast, at any rate. The climax of the fun comes in the duel scene, which is decidedly novel and ridiculous. The umpire persistently stood in the way of the camera, however, and shut off a view of the cowboy's death throes, which was an annoying deprivation and undoubtedly robbed the scene of considerable hilarity. The photography is brilliant in the under exposure style, with just the suspicion of a sepia tint (so it seemed); at any rate, the pictures had a rich tone decidedly pleasing to the eye.

The Test of Friendship—Edison. The rescue scene is a marvellous piece of realism, entirely convincing. One would readily suppose that it was enacted on the top of the skeleton skyscraper. This illusion is cleverly fostered by the opening scene, where we are actually shown the laborers descending from that lofty height by means apparently of the same hoist that later formed the actor's perilous support. He seems to be suspended over 200 feet of empty space, and we have to keep assuring ourselves that it really isn't so in order not to get excited. The drama is equally convincing and holds a pretty love interest owing to the ingratiating personality of the leading actress.

The Old Water Jar—Vitagraph. An Indian subject that is way out of the ordinary, handled in a lofty spirit, and with impressive effect. It is really an epic of an Indian's soul, related in short episodes with a prolog and epilog, and the effect is not far from that of poetry. The old water jar serves as a unifying and cohesive element, holding the episodes together and effecting the transition from present to past, focusing the interest and pivoting the action. From the standpoint of dramatic technique it forms an ingenious and masterly expedient. The old Indian acts expressively, with restraint, but forceful effect, easily conveying to the audience every shade of thought and emotion. It is an exclusively Indian subject, with the characters assumed by pale-face actors, all but one, who appeared to be a full-blooded Indian, and he was so skillfully employed in the groupings as to reflect veri-similitude on all the rest. The memory episodes are well arranged, but would it not have been neater workmanship to introduce them by the double-exposure method, allowing them to fade on and off the screen? It would have been more conducive to the effect of reverie and dreams. This is a small point, but would have added a touch of perfection to an already remarkable film. It is such a film as, for exalted and impressive effect, occurs only once in several months.

Of Interest to the Trade

By L. F. Cook

Fireproof Film Company Progressing

The contract for the erection and completion of the first group of buildings for the Fireproof Film Company, whose present offices are at 27 Church street, Rochester, N. Y., has been awarded to George C. Rossell, and the contract for excavating awarded to Byron Hadden, who started this portion of the work some time ago. The plans were prepared by F. A. Brockett. The consulting engineer is S. Firestone.

The buildings now under contract will call for an expenditure of at least $200,000, including mechanical equipment, etc., and plans have been prepared for a considerable increase to this amount by the erection of additional buildings as soon as those now contracted for are in operation. The present operations provide for fireproof construction, and are up-to-date in every detail. A considerable amount of reinforced concrete and structural steel will be required; approximately 150,000 square feet of steel reinforcement will be used for the concrete work.

In the mechanical equipment the company has taken advantage of the very latest and tried-out machinery, apparatus, etc., some of it being their own invention. The markets of United States and Europe will supply a number of features which will greatly add to the efficiency of the plant. Electricity will be used to a very considerable extent, and will be generated by the company's own plant.

About a year ago the company acquired the large estate which is bounded by Lake, Dewey, Ridgeway and Knickerbocker avenues. This comprises over seventeen acres, and is undoubtedly one of the best building sites of Rochester. It is just within the city line, is supplied with gas, water, and electric mains, and is served by the large West Side trunk sewer just completed in Ridgeway and Dewey avenues.

The company's first product to be put on the market is the fireproof film, which is a non-inflammable film that ensures absolute safety for moving picture shows. The invention of this film is the result of long and patient investigation by some of the most expert chemists in the world, and has cost a large amount of money to perfect. Although little has been heard of the company since its incorporation over a year ago, those behind the scenes have been aware of the careful methodical work which it has been quietly doing in its temporary experimental factory to perfect the chemical and mechanical means for manufacturing this product, the difficulties of which are well known by many Rochester residents who have been more or less familiar with the photographic industry. The successful accomplishment of this work has been proved and the company has for a long time past been daily producing film in order thoroughly to test out the product.

The company has been organized by practical men who have had long experience in photographic materials manufacture, and have made successes of their past undertakings. The president is Gustav Cramer, head of the G. Cramer Dry Plate Company, St. Louis. The treasurer is Henry Kuhn, late vice-president of the Defender Company of Rochester. The secretary is J. E. Thornton, late of the Thornton-Pickard Company, England. The board of directors includes the names of men who stand high in business and financial circles.

Buffalo Health Official Asks Aid of Pictures

Health Commissioner Fronezak of Buffalo, N. Y., in an effort to check the spread of tuberculosis, is in favor of enlisting the co-operation of the moving picture show managers of that city and setting aside a day when pictures will be shown to enlighten the public on this important question.

"As is well known," he said, "consumption is one of the worst enemies of mankind and the whole civilized world is waging warfare against this common foe. In no more efficient way can victory be gained than by teaching our people how to protect themselves against its ravages, and, to this end, the moving picture shows can be utilized to better advantage than any other known method.

"The moving picture show is an extremely popular entertainment, and, through it not only amusement but also education can be supplied; and education along the line of health protection can be made entertaining and impressive. It is the aim of the department of health (and the management of many of the moving picture shows in Buffalo have expressed a willingness and determination to help) to set aside one day, in the near future to be known as 'Tuberculosis Day,' when special features pertaining to consumption will be pictured on the screens.

"It is hoped that all moving picture show managers will take an interest in this important undertaking in the interest of humanity, and help in this educational campaign for a healthier community."

As a result of this appeal, Wednesday, December 28, was "Tuberculosis Day" at all the Buffalo nickel theaters and the managers of nearly all these places of amusement offered to donate the net proceeds of the day's business to the Buffalo Association for the Relief and Control of Tuberculosis.

In addition to the special slides furnished by the health department, the theaters ran an especially attractive program of a general type so as to combine the educational and amusement features and thus appeal to the largest possible audience.

Boy Shoots at M. P. Bird

So very realistic were the pictures of birds flying in one of the moving picture shows at Ann Arbor, Mich., the other day, that a small lad with an air rifle got excited, took aim and banged away before he realized there was no bounty paid for the heads of that kind of birds.

The youngster is a good shot, however, and pinked the bird's breast just as it was seemingly flying across the stage, but it kept on flying, the bullet making a small hole in the screen.

Synopses of Current Films

Biograph

HIS TRUST.

"His Trust" is the first part of a life story, the second part being "His Trust Fulfilled," and while the second is the sequel to the first, each part is a complete story in itself. In every Southern home there was the old trusted body-servant, whose faithful devotion to his master and his master's family was extreme to the extent of even laying down his life if required. This Biograph subject portrays a story which in no way exaggerates the self-sacrificing love of the man for his master. The cruel war has just begun and when Colonel Frazier leaves home to join his regiment of Confederate soldiers, he tells George, his body-servant, to take good care of the wife and child he is leaving behind. A short time after the husband is killed in battle and one of his comrades brings the news of his death to his wife, giving her his sword. This is hung over the mantel. This is indeed a heavy blow to the poor woman, but her burden is made heavier when the Union forces appear, plunder the house and burn it to the ground. When this occurs the child is alone asleep in her

crib, it being the hour of her afternoon nap, and the mother has gone for a walk about the grounds for diversion to ease her heartache. The old servant is also out on the farm repairing a hedge. Seeing the flames he at once thinks of the child. Without thought of self, George dashes through the flames into the house where he finds the child on the floor overcome by the heat and smoke, and carries her out, placing her safely in her mother's arms, the poor woman being now in front of the burning house, frantic with anxiety. Recovering somewhat from the effects of his struggle in the house, he thinks of his master's sword, and at the risk of his life he re-enters the building and secures it. It is not long after that the entire house collapses and a most pitiable illustration is given here of the sufferings of many a Southern woman during that awful time of strife—homeless, with no apparent asylum. George now realizes the sacredness of his trust, and taking the heartbroken woman by the hand, leads her and the child to his own humble log cabin, where he gives his all for their comfort, he being content to spread a blanket on the ground outside the door on which to lay his head. Thus far has the servant been faithful to his trust.—996 feet. Released January 16.

HIS TRUST FULFILLED.

This Biograph subject while being a complete story in itself is a continuation of that told in "His Trust," the synopsis of which is as fol-

lows: The master leaving home at the opening of the war to join the Confederate Army, tells his body-servant to take good care of his wife and child. The master is killed in battle; the home is sacked and burned, leaving the woman and child homeless, and the old negro, faithful to his trust, gives up his little cabin for their comfort. The only thing saved from the wreckage was the master's sword. The opening scene takes place four years afterwards. The war has closed, and the negroes leave to enjoy their emancipation, but George remains true to his trust. He has all these years cared for the widow and her child. The poor woman, worn with worry and heartache is stricken and dies. The care of the child devolves upon George, who takes her to the lawyer, with whom he arranges for a home for her, paying for her support out of his savings, enjoining absolute secrecy on the part of the lawyer. For several years things go along uneventfully until the child now grown desires to go to the seminary to procure an advanced education. To the lawyer this seems impossible, but George when he sees the girl break down and weep, insists that he take the last of his savings and appropriate it for the purpose. This is an awful ordeal which old George goes through, denying himself even the positive necessities of life in order to keep her in school for the full term. However, at the end of the first term there is nothing left of George's savings and the lawyer is forced to inform the girl that a return to school is impossible. To witness the child's disappointment is more than old faithful George can stand, and going to the lawyer's office, he finds a cousin from Europe there inquiring as to the condition and whereabouts of Miss Frazier. George entering the office surreptitiously espies a fat wallet in the Englishman's coat pocket. His love for the child and his desire to grant her every wish leads him into temptation, so he takes the pocketbook. However, he has hardly secured it when his better self asserts itself and he puts it back, but not before he is detected. The lawyer knowing the negro's worth realizes what prompted his action and sends him off. The English cousin later meets the girl and they are betrothed and a happy wedding follows shortly after. Old George at a distance views the festivities with tears of joy streaming down his black but honest cheeks, and after they depart for their new home, he goes back to his cabin, takes down his master's saber and fondles it, happy in the realization that he has fulfilled his trust.—999 feet. Released January 19.

Edison

WITH INTEREST TO DATE.

Hanford, a young engineer on construction work, is ambitious to succeed in business, and also to marry the daughter of his employer. A big contract comes up and he feels that if he can land it, his chances will be decidedly good with the father. The girl he has made sure of in advance. The big contract is the rebuilding of the Wiley plant. He calls upon the Wileys and they lead him to understand that there is a possibility of his getting the order. He goes to work and spends much of his valuable time in study and research and finally lays his plans before their force. When he has finished his exposition the Wileys thank him genially and bid him good-day. He is given to understand that he does not get the order, that they simply wanted to have their force see how a really good salesman went to work (and incidentally they have had valuable points given them in structural engineering). Naturally Hanford is pretty sore and makes up his mind to get even. The opportunity comes when he finds himself a rival of young Wiley for a big English contract in London. Wiley has letters of introduction and every pull; Hanford has nothing. But Wiley incautiously shows the girl, for whose hand he is also a rival, a cipher cablegram to his father and she passes it on to Hanford. Then Hanford sees a way to beat Wiley, Jr., and get square with Wiley, Sr. In the office of the English syndicate having the contract to give is a clerk who strongly resembles Sir Thomas Drummond, the Chief of the Syndicate. Hanford makes a friend of this man and sends him to America, where he meets Wiley, Sr., and impersonates the Englishman of affairs so successfully that Wiley, Sr., takes his tip and cables his son to add fifty thousand pounds to their bid for the English contract, thinking that he is thereby adding this amount simply as graft for the Englishman. Of course the result is that the contract is awarded to Hanford, and he returns to America on the same steamer with the disgruntled young Wiley. In the custom house, while waiting for their trunks to be examined, all the characters come together and Wiley, Sr., learns how he has lost the big contract and how Hanford has gotten square with him. Incidentally Hanford convinces his prospective father-in-law that he is not only a clever salesman, but a valuable addition to the family, and everything ends happily.—By Rex Beach. 1,000 feet. Released January 17.

UNCLE'S BIRTHDAY GIFT.

Uncle, a jovial old bachelor who is passionately fond of practical jokes, conceives the idea of sending a valuable necklace to his niece concealed in the pot of a rubber plant. The messenger boy to whom the old gentleman entrusts the plant, through an unfortunate mishap, loses it. The boy realizes the importance of delivering a plant and buys one, but as he has only a quarter and all plants look alike to him, he buys a small fern and delivers it. The niece sees from the contents of the note that she has not received the proper plant, and she and her husband question the messenger boy until he confesses how he lost the original. After offering him a reward he promises to recover the plant. The uncle arrives at an unexpected moment and is immediately taken to another part of the house while the niece and her mother hurry to a neighboring florist to purchase a rubber plant so as not to incur the old gentleman's displesaure. The newly acquired plant is quickly placed upon a pedestal in the drawing room near an open window, after which they go to fetch the uncle to show him the place of honor which the plant occupies. In the meantime the plant falls to the pavement below. The case now reaches a point of utter hopelessness, but at the critical moment the messenger boy, having displayed considerable skill as a detective, arrives with the original rubber plant and the valuable necklace reaches its intended recipient.—995 feet. Released January 18.

MIKE THE MISER.

"Mike the Miser" is a little district telegraph messenger boy who has won the soubriquet by his closeness. We see him first in the office of a hospital asking for information as to an operation which shall restore his little crippled sister to health. Then follows the receipt of a letter from

the hospital authorities, telling him that the sum of fifty dollars will be needed. This is a large sum for a small boy whose little income is the only means of support for his widowed mother and the aforesaid little sister. But he goes bravely to work to save the money and keeps it a secret. This is why he refuses to spend his money as the other boys do; to play craps, or to buy pop-corn or peanuts. Naturally his fellow messengers resent his apparently stingy character and they dub him "Mike the Miser." They pin a placard on his back which reads: "Mike the Miser. He never spends a penny. Don't give him a tip, he aint wuth enny." It is very badly misspelled, but it serves its purpose in the resultant discomfort to poor little Mike. A friendly policeman finally tells him of the sign and takes it off. Mike retains the placard and meeting two of the boys later, discusses the subject with them vigorously, the result being a fight in the snow in which Mike, despite his valor, gets decidedly the worst of it, the other boys considering that they have given only the proper treatment to anyone as close-fisted as our hero. And then follows an accident; stepping off a street car Mike sprains his ankle and is laid up. Fearing to lose his job and thereby lose the chance of paying for the much desired operation, he writes a note to the Superintendent asking him to keep the job for him, and telling him how it happened that he is away from work and why he wants so much to retain the position. This letter falls under the notice of the largest boy in the office and creates in him a sudden change of heart. He shows it to the others and shame covers their small faces. After a few seconds of remorse one of them gets a brilliant idea and producing an old worn pocket book, he shows how much money it contains and suggests that they all contribute what they can and make up the balance needed for the operation, which balance is now only a few dollars. And then, forming themselves into a committee of the whole, they wait upon our disabled little hero and with immense formality and boyish stiffness tender him a letter of apology and the purse of money. It is too much for little Mike's stubbornness and he breaks down and hides his eyes that the boys may not see the tears. But little sister rewards them as they should be rewarded—by a hug and a kiss for each boy—and the picture ends with their receiving Mike into their arms and hailing him as a comrade again.—995 feet. Released January 18.

WILL IT EVER COME TO THIS?

Lubin

Mrs. and Mr. Sarah Jane Brown—note the names—are a married couple of 1920. They first appear in the Brown dining room, where Mr. Brown enters from the kitchen with a tray and puts breakfast on the table. One of the Brown girls slaps one of the Brown boys, a timid creature of 13, and makes the poor dear cry. Mrs. Brown, dressed in a very masculine costume, comes in, sits down at the table and pours her coffee. Mr. Brown waits on her, tremblingly. She tries to cut the meat, but it is too tough. She declares the coffee is cold, gets angry and scolds Mr. Brown. That poor man bursts into tears and flees to the kitchen. Mrs. Brown rises angrily, takes her overcoat and Derby and goes out, slamming the door. We next see Mrs. Brown at her office, where she is very attentive to a ladylike young man, her stenographer. We see her at the club, smoking and playing cards with others of her kind. We see Mr. Brown at home making beds, sweeping, washing the clothes, hanging them out and gossiping over the back fence with another man who is similarly employed. We see Mr. Brown "up against" a problem that troubles some present-day women. He stops his wife, one morning, just as she is leaving for the office, shows her his wornout clothes and shoes, and pleads with her for money to get new ones. Mrs. Brown laughs and snaps her fingers and goes out, slamming the door, and leaves poor Mr. Brown in tears. Then dear, sweet Willie Brown is wooed and won by a handsome young woman whom his mother brings home and introduces, and the scene closes with the wedding bells ringing merrily for the young woman and her blushing bridegroom.—715 feet. Released January 16.

A BROTHER'S REDEMPTION.

In 1863 two brothers were conducting a prosperous brokerage business left them by their father. The older brother was very industrious; the younger was easy-going and inclined to drink. Through his negligence the business was brought to ruin in spite of all the older brother could do. When the crash came the younger brother, ashamed of himself, went home, left a note to his mother stating that he was unwilling to be a burden to her, and went away. The older brother saved enough out of the wreck to open a country store. In the village he met a young girl and they became sweethearts. Meanwhile the younger brother went from bad to worse and finally became a direlict and a tramp. In the course of his wanderings he came to the village and, as chance would have it, called at the home of his brother's sweetheart in search of food. She took him in and gave him a meal and some clothes. While he was eating the older brother arrived. From the kitchen the tramp overheard him tell the girl that he had been drafted to go to war. Though he was anxious to become a soldier, he hesitated on account of his mother and sweetheart. In that moment the prodigal was overwhelmed with remorse and determined to redeem himself. When his brother left he followed him, stealthily entered the house, found the drafting paper, stole it and immediately presented himself at the recruiting place, where he was accepted in place of his brother. The last scene shows him in the midst of a battle, fighting bravely and recklessly. Suddenly he drops, mortally wounded. During a short period of consciousness before his life has ebbed away he sees a beautiful vision of his mother, his older brother and the latter's sweetheart, now his wife, living in happiness and peace.—1,000 feet. Released January 19.

FATHER MAKES HIMSELF USEFUL.

Fritz Grenshaw was an ideal husband and very much in love with his young wife, Irene. But his disposition was such that he did not show many of those little attentions and caresses which women love. After awhile Irene decided that she was a neglected wife. She wrote to her husband's father, complaining of Fritz's neglect. His father thought over the problem and then had a bright idea. He packed his grip and in due time arrived at the home of his son and daughter-in-law. There he told Irene of his scheme and she entered heartily into it. When Fritz came home he found his father very attentive to Irene. At first he took no notice of this, but father's attentions increased at an alarming rate. Finally Fritz remonstrated. Then he became angry, then suspicious, and at last very jealous. He told father right there in pretty strong language what he thought of his actions. Things were getting pretty serious when father and Irene revealed the whole scheme, with the result that Fritz and his wife "lived happily ever afterwards."—975 feet. Released January 23.

THEIR NEW MINISTER.

Nestor

Like Peter Pan, Jack absolutely refused to grow up. His six feet and five and twenty years made not the slightest difference! In spirit he remained the same mischievous boy as of yore. Small wonder then that when he arrived at Uncle Jim's, whom he had not seen for ten years, and was mistaken for their new minister, that he should have instantly decided to have a little fun with the dignified church committee who met him at the station. With much pomp, they escorted him to John Scott's—the minister's boarding place. So the next day when that worthy returned home with just a drop too much, Jack read the old man a severe lecture on the evils of drink, then demanded the bottle and calmly drank its entire contents before the eyes of the astonished John. The pack of cards which the bewildered man dropped as he pulled out his handkerchief caused Jack to follow his host that evening, even without Betty Scott's advice. And great was his glee in beholding the staid committee quietly enjoying a little game of poker. To their amazement the young man joined the

game, and proved such an apt pupil that not only did he win everything in sight, but also secured an I. O. U. from Hiram Jones. It was by waving this I. O. U. over the grouchy old bachelor's head that induced that individual to buy Amanda Sniggin's ticket for the Tripe supper, which was to be given for the benefit of the church. Hiram's marked antipathy to Miss Sniggins gave his tormentor an idea. So writing the lady a note in which he congratulated her upon a mythical inheritance, he handed it to Hiram to post and calmly awaited results. Nor had he long to wait, for scarcely had he and Betty seated themselves on the lawn, than Miss Sniggins and her now ardent admirer presented themselves to be married. Hardly able to keep his face straight, Jack put them through the most ridiculous of mock ceremonies, then fled into the house, only to be confronted by the real minister and an indignant church committee. Jack's knowledge of their little gathering, however, held the men's tempers in check—but indeed so jolly a companion had he proven that when Uncle Bill stepped forward to vouch for the young scamp, even Betty was forced to accept his humble apology.—Released January 18.

THE EVILS OF BETTING.

Pathé

Elsa Norton is engaged to Herbert Darrell, a man of excellent disposition, but with a fatal propensity to gamble. He receives a reliable tip to put all he has on a horse, Alma II, that runs that afternoon. He is tempted to enter Mrs. Norton's home unseen, and to take a roll of bills from her desk, thinking that he can repay it after the race. Alma II is beaten, and the theft discovered. Darrell had dropped his pocketbook when entering the house, and confronted with it, he cannot but confess his guilt. Bitter, indeed, for he knows that from henceforth he and Elsa must be strangers.—676 feet.

IN THE LAND OF MONKEYS AND SNAKES.

In this picture we catch a glimpse of forest life in the Sunda Isles, and we learn how the natives coax the greedy monkeys out of the forest by distributing food to them. They are thus rendered familiar with man, and in time can be trained to gather cocoanuts, an example of their ability in this direction affording us a curious picture. Other inhabitants of the islands are large water snakes, and in one of the pictures is shown the entrance to a dark natural tunnel way, through which runs a clear stream. Natives bearing flaming torches are in the act of entering; their passage through the tunnel dislodges hundreds of birds which flutter out in clouds into the bright sunlight—a remarkably pretty spectacle. Some minutes elapse, and then without warning a couple of natives come springing out of the tunnel way; two large snakes have been driven out, and with a grab one of the men catches the large reptiles by the hand just below the head.—276 feet. Released January 9.

THE TWIN CINDERELLAS.

Jeanette Nally, in the exuberance of her joy at the wedding of her friend, takes off her overslipper and throws it after the happy departing couple. Officer Smith, Jeanette's lover, finds it and, taking it to the police station, puts it in his locker for safe keeping. Hardly has he done so when Officer Swat stows away another pretty slipper in his locker. The latter has been lost by an actress on leaving the stage door, and when

she discovers the loss things begin to happen, for, stowed away in the toe is all her jewelry. Detective Reegan is assigned to the case, but is baffled until, upon going with Smith to call on Jeanette, what should he see but the missing slipper. Of course, it's not the one he wants, but he doesn't know that. Jeanette is arrested, the actress is summoned, Detective Reegan, Sergeant Doyle, Officers Smith and Swat all get mixed in an uproariously funny situation.—705 feet.

DUSTY RHODES TAKES A FLIGHT.

Having stolen a paper windmill from a toy store, Dusty Rhodes, an unwashed tramp of dubious antecedents, dashes along the highway to escape from the pursuing storekeeper. A man with a bicycle offers little prospect of resistance and the tramp secures his machine. He mounts it, and in his wild flight runs into a milliner's girl and a porter, whose big hat boxes, becoming affixed to his wheel, form the body of an aeroplane; the windmill serves for a propeller, and it is thus that Rhodes mounts into the air, over roofs and chimney pots, far from the reach of his enemies. In the clouds he enjoys himself serenely. The efforts of his poor fellow creatures to bring him down to their planet amuse him intensely. The militia is brought out and a round of firing ensues; this is followed by the cannon shot of the artillery, but none of it disturbs the airman, who sails comfortably on his way without hurt or harm. The least of things, however, causes his fall. A youngster, shooting with a popgun, directs his aim at Rhodes, and that bold and intrepid aviator comes to earth amidst the ruins of his machine within the space of half a second. He is captured and his flying days are brought to a conclusion by his hurried departure to prison.—249 feet. Released January 11.

SO NEAR BUT NOT QUITE.

A housebreaker is caught in the act of forcing an entrance into a large house; he escapes by appropriating a bicycle, and a policeman, having borrowed another, sets out in pursuit. The chase proves to be an exciting one, for both policeman and thief are expert riders; pedestrians are knocked down and ridden over, flights of steps are descended and small hills of sand and mortar are mounted. At length the thief succeeds in putting sufficient distance between himself and his pursuer to allow of time for refreshment. He steps off his machine and orders a drink which he is lifting to his lips when the policeman appears. Thereupon, the thief adroitly pushes a chair before his enemy's front wheel, which brings that officer to earth. He quickly recovers, however, and the chase is continued. A second time the unfortunate policeman suffers real disaster. He is knocked over by a motor car, and is picked up in an unconscious condition by another member of the force, who, assisted by the thief, carries him to the police station. Here the thief is warmly thanked for his services, and a little remuneration is slipped into his palm by an over profuse police captain.—420 feet.

MAX IS ALMOST MARRIED.

The inimitable Max hails with delight the opportunity to marry a rich millionairess, and is pleased to find that she is both young and charming. The lady seems equally impressed with Max. But "the course of true love never did run smooth." The lady's canine pets threaten to prove an obstacle to Max's happiness. Their mistress will not be parted from them, and they see in Max a rival to their mistress' affections. However, everything goes well, and the wedding day is fixed. Max breathes a sigh of relief when he is told that the pets will be locked up during the ceremony. But the faithful animals chafe at the unusual restraint and, finally bursting the kennel door, scamper joyfully into the drawing room, where the wedding guests are assembled. Max, distraught with fear, when the dogs jump at him, rushes wildly out, and away run the dogs after him. Finally, Max is brought to bay on a roof. Tearing a leaf from his pocketbook he scribbles a note: "I fear I would much sooner give you up than be devoured by your pets." This he tremblingly proffers to the foremost dog, and they all run off to their mistress. She is not broken-hearted; indeed, it seems obvious that she would lament the loss of her dogs more than she would that of her husband.—572 feet. Released January 13.

THE BATTLE OF REDWOOD.

An intensely interesting and thrilling reproduction of the famous Redwood massacre. The Indian agent at Redwood sells his entire commissary to a cavalcade of settlers driving across the plains. It has been a hard year and the Indians have been compelled to eat their very dogs for sustenance. Many are starving. Grey Elk, a Cheyenne, is saved from starvation through the kindness of Prudence, the niece of Father Laurent, at the Mission House. When the Sioux find that they have been swindled, they scalp the agent and take the warpath. Across the Prairie trails the long line of settlers. The Indians pursue them and the settlers make every effort to escape, but finally draw their prairie schooners up in a circle and make a last stand. Hope is gone, when a detachment of cavalry is summoned by Grey Elk, the grateful Cheyenne, and the tide of battle changes and the Indians are put to rout. The battle scene, the burning wagons, the cavalry charge, are all thrilling. A delightful love story is woven through the entire picture.—1,000 feet. Released January 14.

THE REPORTER'S ROMANCE.

Solax

Editha Brawnson, a successful magazine writer, receives a letter from the Managing Editor requesting her to secure for him a story depicting the life of the underworld. Miss Brawnson determines to get the necessary data for the story by disguising herself as a woman of the lower class and mingling with the people whose lives her facile pen will portray. She begins operations by entering into a cheap saloon on the lower East Side. While there, she inadvertently discloses a large sum of money. This attracts the attention of old Mother Gessop, an inhabitant of the place, who quickly begins to warm up to Editha, with the idea of ultimately getting possession of the money. Old Mother Gessop persuades Editha to go with her and introduces the daring young newspaper writer into a burglars' den. The chief of the gang of robbers becoming suspicious of Editha, determines to put her to the test by compelling her to commit a robbery. He forces her to accompany him to a house which he has picked out as being a favorable place for their nefarious plan and waits outside while Editha, who has been duly equipped with mask, revolver and all the other necessary tools, enters the house. In terror of her life Editha enters the place and is about to rifle the safe when she is interrupted by the owner, Bert King. Surprised to find a woman engaged in such an occupation, King, nevertheless, feels it his duty to deliver her to the police. Keeping Editha covered with his revolver, he turns in an alarm. Almost frightened to death by the situation in which her escapade has involved her, Editha faints. While awaiting for the police to arrive, Bert makes a careful scrutiny of his prisoner and finds the letter from the magazine editor which discloses to him Editha's identity. By a clever ruse he sidetracks the police upon their arrival and permits Editha, whose youthful beauty has made a deep impression upon him, to depart in peace. The inevitable follows; Bert subsequently sees Editha in her home, they marry and live happily ever after, and the bad, bad, burglars, whose doings have formed the basis for a remarkably good story which the young reporter turns in, are arrested and properly punished for their many crimes.—Released January 20.

THE BATTERED BRIDEGROOMS.

American

Kitty Benson, on the day of her betrothal, receives a message from her cousin, Jack Smith, stating that he and his fiancee have run away from the paternal roof of opposition and will be married at once, and in the meantime asks that she lend her cousinly aid in hiding his lady love in her house until the minister can be arranged with. She arrives and receives the succor requested and is immediately followed by Jack, who shows his appreciation of her good services in good cousinly embraces. These marks of endearment are seen and of course misunderstood by Kitty's intended. Jealousy is invariably unreasonable and his is no exception to the general rule. Without waiting for explanations, he assaults Jack, who, surprised, retaliates, and the two men disappear from view, a heterogenous mass of struggling legs and arms. When all their surplus energy has been spent, they creep back to their excited and almost hysterical sweethearts, very much the worse for wear, are repaired and bandaged by loving hands, and after the few necessary explanations are glad to be friends and to give the minister an opportunity of earning a double marriage fee.—525 feet.

A DENTAL DISASTER.

Two rivals for the hand, but more particularly the bank roll, of a wealthy widow, whose money is her only attraction, meet in a hotel where the said widow is residing. The most favored of the two, however, meets with a serious accident which not only affects his personal appearance, but his power of speech as well. He breaks his new set of beautiful upper teeth, and being of an extremely sensitive nature, dares not pay his addresses thus handicapped. He has an extra set, however, which he sends for, and when fully equipped for the fray renews his love making and is on the verge of being accepted, when his rival with malicious intent bumps into him, with the result that his very essential facial adornments are knocked out and lost, putting him completely out of business. They are found in due time by a chambermaid, who places them in the hands of the hotel clerk. Painstaking inquiries fail to locate the owner, so, in order to ascertain to whom they belong, he decides to sell them by auction. The sale is an animated conflict between the rivals, but the preferred suitor outbids his friend, recovers the toothsome morsel and once more is able to smile without embarrassment. The widow falls into his arms when requested to do so, and when she discovvers the reason for his past reticence, surprises him by acquainting him with the fact that she, too, is on very familiar terms with her dentist.—450 feet. Released January 16.

THE BONANZA KING.

Lillian Randolph, the daughter of an old New England family, has two suitors for her hand, Arthur Neville and Chester Hawley. Neville (the favored one) is addicted to the use of liquor and is frequently seen under its baleful influence. The other one (Hawley), while of excellent character, is finally rejected in favor of Neville. Smarting under the sting, Hawley devotes his time to spying upon Neville, who, despite his sacred promise to reform, still continues in his downward course after his marriage to Lillian. While on a prolonged debauch, Neville is seen by Hawley, helplessly intoxicated, in a public resort. He sends a letter to Lillian, apprising her of the fact and telling her where her unfortunate husband can be found. Lillian hastily dons a wrap and goes in search of him. She is seen pleading with her husband to return with her to their home and little child, when Hawley comes into the scene and brutally reproaches her with rejecting him in favor of such a drunken, worthless wretch. Neville in his half-crazed condition through his long debauch, sees his old rival sneeringly calling his wife's attention to his helpless condition. He draws a revolver from his pocket, rushes from the scene, in pursuit of Hawley, who has tauntingly left the place. He follows him to his home, bursts into the library, revolver in hand, only to be met by three burglars, who are at work looting the home of Hawley. As he appears through the door, he is seized, chloroformed and placed upon the floor. The burglars again resume their work, when another interruption comes. Hawley appears upon the scene. He discovers the intruders at work upon his safe, interrupts them and is shot with the revolver, which was taken from Neville's hand and placed upon a table. Neville recovers consciousness, finds the body of his rival, sees his own revolver on the table and imagining he did it, rushes from the scene. In a fit of remorse, he seeks his wife, tells her of the murder of Hawley, and flees from justice. He seeks a refuge in the far West, and after suffering untold agony and remorse for five years, he accumulates a large fortune through mining interests he has acquired. He returns to the East, under an assumed name, institutes a search for his wife and child, whom he finds living in abject poverty and about to be dispossessed by the very man who committed the murder which he believed himself guilty of. An accident brings him in contact with one of the trio of burglars who were engaged in the looting of Hawley's safe, and an accidental kindness to the man causes the latter to relent, and he tells him the story of Hawley's murder, and discloses the rendezvous of the crooks. His wife and child have been rescued from their direful poverty and are transferred to Neville's home, with every luxury money can purchase. Neville is taken to the crooks' rendezvous, where the principal offender, the murderer of Hawley, confesses his part in the crime. He is arrested, and Neville is reunited at last with his wife, child, and his old family retainer, James, the servant who has remained loyal through all their trouble and misery.—990 feet. Released January 19.

Among the Picture Theaters

PERSONAL NOTES.

A. N. Waters, the popular manager of the Bonita Theater, Tampa, Fla., has given that city one of the best moving picture theaters in the South. Mr. Waters' experience in different official capacities with a variety of first class attractions has well fitted him for this work. In April last he opened the Bonita Theater, putting on high class pictures and operating a house on a par with cities much larger than Tampa. Success attended his efforts from the first. Later on the Bonita Theater in Ybor City was opened and that has prospered also. The Bonita theaters are two of a chain of seven throughout the South, these theaters being known for the first class character of all of the productions shown in them. Another has just been opened in Norfolk, Va. Mr. Waters has been assisted in his various enterprises by his wife.

C. C. Struble, manager of the Comet moving picture theater at Albia, Iowa, has been so successful in his management of that house that he has been solicited to take charge of a moving picture and vaudeville house in Sioux City. Mr. Struble has declined the offer, however, and will remain in Albia, believing his present location offers as good inducements as a new place would.

Walter Farley, said to be one of the best known motion picture operators on the coast, has been secured by Manager Frank Atkins, of the Marysville and Oroville moving picture houses, to operate the Oroville house.

Charles E. Fein has accepted the position of manager of the Penn Theater, Pennsylvania and Liberty avenues, Brooklyn, N. Y. The patrons of this theater are to be congratulated for Mr. Fein is a young man with practical experience and possesses the essential qualities for managing a moving picture theater. His efforts are ever in the direction of pleasing the patrons and has demonstrated in his past experience that it is wise to refrain from exhibiting pictures which are questionable in character and demoralizing in influence.

PACIFIC COAST LETTER.

The latest large moving picture theater to open its doors is the College Theater, Hill street near Fifth. This magnificent new theater is owned by Prochazka and Hyman, under the management of Mr. Hyman. The seating capacity is 500, and the chairs are of the leather upholstered variety, and exceptionally large. The ceiling is arched, 39 feet high and beams running across from side to side. The side walls are paneled, and draped with pennants and banners of the various colleges. The floor is of cement, and aisles carpeted, width of room 42 feet. A six piece orchestra is used, which is under the direction of Lillian May Lancaster, four reels of independent film, first run, and two or three specialty acts make the show. The operating room equipment consists of two Edison Type B machines, and a stereopticon, two operators are employed thereby making a continuous performance without intermissions. The admission is 10 and 15 cents, theater open from 10 a. m. to 11 p. m. The front is of the French rennaisance style of architecture topped with a large electric sign, and having about 800 lights. No posters, program, music, or other outside advertising is used, and to date this place has played to a capacity business. A total of sixteen employees is required, all neatly uniformed.

The largest of the many suburban shows to open so far is the Siegert Theater at Jefferson and Arlington streets, owned by Fred Siegert. Mr. Siegert has great confidence in that neighborhood, as he bought his own lot, and erected his own building at a total cost of approximately $18,000. The entire building is occupied by the theater, the auditorium seats 440, the ceiling is 27 feet high, and artistically decorated. The operating room equipment consists of a Motiograph, and a double dissolving stereopticon. Four reels of independent film, and two songs, or other specialties make the show, and the music is supplied by a three piece orchestra, and sound effects are used. Mr. Siegert came to Los Angeles about 16 months ago, having bought the American theater at Fifth and Broadway, which house had until that time been a lemon. Through tireless work, and intelligent management it developed into one of the best paying shows in town, during which time he founded the Los Angeles Film Exchange, which was merged with the California Film Exchange, making the Pacific States Film Exchange. In March of this year he sold the American, and later disposed of his interests in the film exchange, after which he made a tour of the large eastern cities, expecting to locate in one of them, but decided to come back here, and his new suburban house proves that his confidence in this city has not been shaken.

The most elaborate of the smaller suburban theaters to open is the Broadway, at 2604 North Broadway. M. Gore and S. Stern are the proprietors and managers of the theater, and Paul Blei the owner of the building. Messrs. Gore and Stern also own and operate the Plaza theater, and have in mind the opening of another show. The Broadway has a seating capacity of 350, using leather upholstered chairs. The Edison type B machine is used, the throw 90 feet and a 9x12 picture projected. The lobby has a tile floor, and the sides and ticket office are finished in marble. A large electric sign across the front, which is of semi-mission style of architecture, and about 200 lights, make the display. At present no program, posters or other style of lobby displays is used. The music is furnished by a three-piece orchestra. Four reels of licensed films and a song comprise the performance.

The Davis theater, owned by C. C. Davis, located at Twenty-seventh and San Pedro streets, is another suburban show recently opened. This place has opera chairs, seating 325, a Powers No. 6 machine is used, with a Bell and Howell current saver.

Heinies theater, at Washington and San Pedro, is also a new one, seating 200, using a Standard machine, throw 55 feet, size of picture 7x9½. Both of the above houses use licensed film.

The Pico Heights theater, owned by Dr. George Smith, is numbered among the larger suburban places, seating about 400. The steel frame opera chairs are used, and the auditorium is very tastily decorated inside, and the lobby is very clean and neat looking, but no pretentious decorations were attempted.

The Lyceum theater, located at 2129 East First street, Boyle Heights, and the second suburban theater to open in Los Angeles, has been purchased by M. G. Rosine, and is at present being operated under the management of Mr. Chas. F. Petty. This place has been thoroughly renovated, new chairs installed, new Edison machine, newly painted and decorated, and a rush of business is reported.—H. E. White.

THE ROLL OF THE STATES.

CALIFORNIA.

Messrs. W. J. Carey and R. Musselman, of Stockton, have reopened the Bell Theater under the name of the Bijou and will conduct the same as a first class vaudeville and moving picture house. There will be from six to eight acts of vaudeville, and from four to six reels of moving pictures. The admission will be 10 cents. It is the purpose of the management to furnish first class entertainment.

The moving picture theaters of Willows raised the price of admission from 10 to 15 cents and added vaudeville attractions every night and for this reason the town trustees have decided to raise the license of moving picture theaters from $10 per quarter to that paid by the regular theater.

R. W. Wodley, formerly proprietor of the Optic Theater, South Broadway, Los Angeles, has closed plans for the erection of a new motion picture theater to be erected at 533 South Main street, that city, which will have a seating capacity of about 900, and when completed will be the most up-to-date and attractive theater of its kind in the city.

The Clark and Snow Amusement Company has leased the premises at 244 South Main street, Los Angeles, and it is the purpose to install a museum similar to those in the eastern states, where curiosities of all kinds will be exhibited.

Plans have been prepared for a moving picture theater to be erected at Moneta avenue and Thirty-sixth streets, Los Angeles, for J. W. Comfort. The foundation will be of concrete, and the building will have an ornamental staff and plaster front. The seating capacity will be about 900.

The Gardella is the name of a new vaudeville theater opened at Oroville, under the management of Messrs. E. P. Rivers and C. E. Howard. The building is of reinforced

concrete and steel, and is not only thoroughly fireproof, but very attractive. The seating capacity of the house is 600 and the cost of construction $22,000.

CANADA.

The Grand Theater, of Winnipeg, has been reopened as a vaudeville house, with a liberal supply of moving pictures.

COLORADO.

The Photo Play is the name of an up-to-date moving picture theater recently opened at Florence in the building formerly occupied by the Isis Theater, which was burned out a few months ago.

The Pueblo Grand Opera House gives a continuous moving picture program two afternoons and nights of each week, at an admission price of 5 cents.

CONNECTICUT.

The "New Majestic" is the name chosen by Manager A. J. Lemieux for Thompsonville's new $10,000 playhouse which is considered one of the finest theaters outside of the large cities. It is located on Ashuntuck street and is the enterprise of Nathan Sisticky. The house will be conducted as a popular priced vaudeville and moving picture house. The building is of brick and iron construction and its outside dimensions are 50 by 100 feet. The main entrance leads into a large lobby at the rear of the auditorium. The main floor is 47 by 60 feet and has a seating capacity of 550. The balcony will seat 550. Near the stage on each side of the main auditorium are located two boxes, each seating five persons. The house is very artistically decorated. Manager Lemieux recently had as his special guests the various clergymen, the elective officers of the town, and members of the press.

The Scenic Theater, on Church street, formerly under the management of Mr. Lemieux, has been closed.

FLORIDA.

Messrs. Gonzales and Pryor, the enterprising young proprietors of the Pastime, Jacksonville's popular moving picture theater, located on Bay street, between Hogan and Julia, are thoroughly remodeling and enlarging same, making it one of the most up-to-date picture houses in the South. The entire interior of the house will be remodeled and new opera chairs installed throughout.

GEORGIA.

L. A. Mitchell has leased the property at 620 Cherry street, Macon, for a period of four years for the purpose of conducting a moving picture theater.

M. C. Eberstein, manager of the Odeon moving picture theater, of Savannah, announces that lack of space, with the increasing popularity of the moving picture theater, necessitates that another moving picture theater of this same class be opened to accommodate his patronage and to meet this demand he will open another one at 125 Broughton street east. Mr. Eberstein still retains active connection with the Odeon.

ILLINOIS.

The Garrick moving picture theater, Sycamore and Twenty-first street, Cairo, has been purchased by Stone Brothers.

Clyde Getteny has opened a moving picture theater at Shannon.

The moving picture theater at Saybrook has been purchased by Chester Robbins, who will install a dynamo and engine and supply his own current.

Frank Warren, who formerly operated the Electric Theater at Wyoming, until it was recently purchased by J. N. Conger, has opened a moving picture theater in Bradford, in the old opera house building.

The Bungalow is the name of a moving picture theater at White Hall which was recently purchased by Wm. Stevenson, of Jerseyville, who has charge of a moving picture and vaudeville house in that city. Mr. Stevenson will operate houses in both places which will enable him to supply his patrons a good series of entertainments.

The Royal Theater of Watseka is now under the management of Messrs. E. H. Morrel and Billy Class and its new proprietors are meeting with deserved success.

INDIANA.

The Gem is the name of a handsome new moving picture theater recently opened in the Kolb building, South Main street, Goshen, under the management of Hal Harrington. The main feature of this pretty little house is its lighting scheme which is arranged in such a way as to give it an especially attractive appearance. It is supplied with a new flickerless model projecting machine.

IOWA.

Messrs. Cort-Schubert and Harrington, operating a circuit of theaters in Iowa and Illinois with headquarters at Davenport, are considering a proposition to devote their houses to moving pictures during the time no other amusements are billed, for the reason that a number of regular attractions are not available. Among the houses so considered are the following: The Illinois, Rock Island; The Clinton, Clinton; The Grand, Muscatine; The Grand, Keokuk; the Grand, Canton, Ill.; The Ottowa Theater, Ottawa, Ill.; the Freeport Opera House, Freeport, Ill.

The Star, of Centerville, formerly owned and operated by G. E. Morrow, has been purchased by O. E. Dickeson, of Oskaloosa, who will continue to operate the same. The Star is well furnished and equipped and will supply the best in the moving picture line.

A new moving picture theater has been opened in the Evans Opera House at Hynes, by Frank West, making two moving picture theaters in that place.

The New Orient is the name of a moving picture theater recently opened at Oskaloosa under the management of Harry Bowen.

The Crystal moving picture theater of Waterloo has been purchased by F. L. Koppelberger.

The Princess moving picture theater of Decorah has been remodeled, which increases its capacity and adds greatly to its convenience.

A new Orpheum theater will be erected at Sioux City in the near future at a cost of $15,000 under the supervision of Martin Beck.

Fred Dever has leased the first floor of the Mueller building, Iowa City, and will open a moving picture theater.

The Letts Opera House, at Letts, has been converted into a moving picture theater which is being well patronized.

KANSAS.

The Vaudette, Fort Scott's pioneer moving picture theater, has been purchased by P. C. Hesser, who has just completed eight years in the service of the county, four as deputy sheriff and four as sheriff. Mr. Hesser expects to devote his entire time and attention to the business and to give the people of Fort Scott one of the most up-to-date picture shows they have ever enjoyed. The Vaudette has at all times enjoyed a large patronage.

The Joy Theater, a popular little picture house of Independence, has changed hands, having been purchased by R. R. Painter, an experienced picture man from Oklahoma, who will continue to operate the house on the same high standard.

MARYLAND.

Architect F. E. Beall has been commissioned to prepare plans for the construction of a handsome moving picture and vaudeville theater for the Royal Amusement Company at 1942 West Pratt street, Baltimore, at a cost of $6,000. The building will be fireproof, with a fancy facade and metal ceiling.

MASSACHUSETTS.

The Grand motion picture house in Indian Orchard has been taken over by the Interoceanic Amusement Company, 346 Broadway, New York City. This company is composed largely of men who are also interested in the W. E. Greene Film Exchange. Joseph Spero has been appointed manager of the Grand. Mr. Spero states it is the purpose of the company to secure other houses and form a circuit at Springfield if the Grand, which is the first house taken over in that vicinity, is a success.

J. La Broad has been awarded the contract for a moving picture theater to be erected in Springfield by M. H. Lyons.

William G. Cummings, who for the past year has been soloist of the Gem Theater of Chickopee Falls, has purchased the Grand moving picture theater of that place formerly owned and operated by E. E. DeGray.

PENNSYLVANIA.

The Nickolet of Allentown, formerly owned by J. K. Himmelwright, has been purchased by George W. Bennethum of Reading, who operates houses in Reading, Pottstown and Coatesville. Mr. Bennethum's success in this line assures the patrons of the Nickolet of high grade entertainment.

NEW YORK.

J. Rosenthal, 149 Rivington street, New York, will open a moving picture theater on Fulton street near St. James Place, Buffalo.

The Gaiety, a moving picture theater of Buffalo, was recently damaged by fire to the extent of about $4,000.

H. P. Knaus has been granted permission to erect a moving picture theater at 855 Tonawanda street, Buffalo, at a cost of $2,500.

The Plaza, a handsome new theater devoted to popular price vaudeville and high class moving pictures, was recently opened at the northwest corner of William and Monroe streets, Buffalo. The structural materal is of brick and steel, with reenforced concrete floors, wire lathing being used throughout in perfecting an absolutely fireproof building Eight massive columns along the entire front support the portico, while a great wrought iron canopy, handsomely studded with tinted glass, is suspended by chains over the entrance to a very elaborate lobby of white marble walls surrounded by a series of art studies. The house will be conducted under the personal supervision of Henry N. Downs, for several years house manager for Keith and Proctor in New York City.

The Imperial theater, 22 Main street, Flushing, formerly operated by Barsch Brothers, has been purchased by Leon Meyman.

The Mozart theater, a high grade moving picture theater of Jamestown, was recently opened on West Third street under the management of Messrs. Peterson and Wood. The new theater is attractively finished in mission style. It is heated by steam and a 48-inch fan at the front draws all foul air through two openings, one on each side of the stage.

A new moving picture theater will be opened at 76 Catherine street, New York, by M. Garone.

OREGON.

The Cozy Amusement Company has been incorporated at Portland for the purpose of operating a moving picture theater in that city. The capital stock is $2,500 and the incorporators are E. L. Cooper, Katie Cooper and B. E. Sellermann.

SOUTH DAKOTA.

A new moving picture theater has been opened at 410 Main street, Aberdeen.

TENNESSEE.

The Crystal Theater of Knoxville, which was recently thoroughly overhauled and remodeled, has been reopened and is now one of the handsomest moving picture houses in the south. The theater is strictly fireproof. There are three picture machines. Two of these will be in constant use and one will be installed in case of emergency. The entrance and exit doors of the theater are solid mirrors. The lobby of the entrance is of art de luxe design. Instead of the usual electric sign on the outside the management has placed a beautiful butterfly, studded with more than a hundred electric light bulbs. The new theater will be under the efficient management of A. G. Lewis, who has had charge of the house for the past three years. The Crystal is under the general direction of Mr. Wassman of Nashville, who has theaters in Nashville, Knoxville and other cities and has been very successful in the moving picture business.

TEXAS.

The Crystal is the name of a new moving picture theater recently opened in the Laudry building at Beaumont.

The Olympic moving picture theater of Port Arthur, formerly operated by Henry C. Stearns, has been purchased by E. W. Watson. Mr. Stearns will open a moving picture house in the Tyrrell building, now being erected on Proctor street between Austin and Waco avenues.

UTAH.

F. T. Bailey will conduct a moving picture theater located on Main street between First and Second South streets, Salt Lake City.

VIRGINIA.

R. C. Broaddus of Richmond will open a moving picture theater on Hull street, between Twelfth and Thirteenth streets, that city.

WASHINGTON.

The Dream is the name of a new theater opened at Aberdeen under the management of J. V. Lynn.

WISCONSIN.

A new moving picture theater is being erected on North avenue, near Twenty-sixth street, Milwaukee, by Bartman and Presthold, at a cost of $6,000.

Record of Current Films

Believing the classification of film pictures by the nature of their subjects to be of greater importance to the exhibitor than classification by maker, THE NICKELODEON has adopted this style in listing current films. Exhibitors are urged to make use of this convenient tabulation in making up their programs. Films will be listed as long in advance of their release dates as possible. Film manufacturers are requested to send us their bulletins as early as possible. Reasonable care is used, and the publishers cannot be responsible for errors.

LICENSED

DRAMA

Date.	Title.	Maker.	Length.
1-2	The Two Paths	Biograph	992
1-2	The Argonauts	Selig	1,000
1-3	In the Days of Chivalry	Edison	1,000
1-3	The Redeemed Criminal	Essanay	1,000
1-4	A Lock of Hair	Eclipse	978
1-4	The Cowboy's Innocence	Pathé	1,000
1-4	The Bolted Door	Kalem	975
1-5	Ramona's Father	Selig	1,000
1-5	His Last Parade	Lubin	390
1-5	The Crimson Scars	Melies	980
1-6	An Intrigue	Pathé	1,000
1-6	The Runaway Engine	Kalem	955
1-7	The Old Water Jar	Vitagraph	984
1-9	Shadows of the Past	Selig	1,000
1-9	The Italian Barber	Biograph	993
1-9	Tag Day at Silver Gulch	Lubin	935
1-9	The Evils of Betting	Pathé	676
1-10	The Test of Friendship	Edison	1,000
1-10	A Child's Plea	Gaumont	758
1-10	The Sophomore's Romance	Essanay	1,000
1-11	Washed Ashore	Eclipse	670
1-11	For the Love of an Enemy	Kalem	995
1-12	The Owner of the "L. L." Ranch	Melies	980
1-13	Water Lillies	Vitagraph	991
1-13	The Link That Held	Edison	966
1-13	The Heart of an Indian Mother	Kalem	1,000
1-14	The Girl of the West	Essanay	960
1-14	Coward or Hero	Vitagraph	975
1-14	A Simple Rustic Tale	Gaumont	958
1-14	The Battle at Redwood	Pathé	1,000
1-16	Buddy	Selig	1,000
1-16	His Trust	Biograph	996
1-17	The Sealed Letter	Gaumont	837
1-17	With Interest to Date	Edison	1,000
1-18	Her Chum's Brother	Kalem	980
1-20	Mike the Miser	Edison	990
1-20	Robbie and the Redskins	Kalem	850

DAILY LICENSED RELEASES.

MONDAY: Biograph, Lubin, Pathe, Selig.
TUESDAY: Edison, Essanay, Gaumont—Kleine, Vitagraph.
WEDNESDAY: Edison, Kalem, Eclipse—Kleine, Pathé.
THURSDAY: Biograph, Lubin, Melies, Selig.
FRIDAY: Edison, Kalem, Pathe, Vitagraph.
SATURDAY: Essanay, Gaumont—Kleine, Pathe, Vitagraph

Date.	Title.	Maker.	Length.
	COMEDY		
1-2	Art and the Legacy	Lubin	950
1-2	The Misplaced Petticoat	Pathé	790
1-3	All Is Fair in Love and War	Vitagraph	973
1-3	The Artist's Pay Day	Gaumont	972
1-4	Sleep, Gentle Sleep	Edison	990
1-5	When a Man Loves	Biograph	998
1-5	A Mix in Masks	Lubin	600
1-6	A Western Night	Edison	600
1-6	The Misses Finch and Their Nephew, Billy	Vitagraph	979
1-7	Love Under Difficulties	Pathé	745
1-7	The Woman Wins	Gaumont	945
1-7	The Count and the Cowboy	Essany	1,000
1-10	Doctor Cupid	Vitagraph	987
1-11	The Twin Cinderellas	Pathé	
1-11	The Gardener's Ladder	Edison	700
1-11	The Twin Cinderellas	Pathé	705
1-11	Dusty Rhodes Takes a Flight	Pathé	249
1-12	The Rival Dramatists	Selig	1,000
1-12	The Midnight Marauder	Biograph	392
1-12	Help Wanted	Biograph	605
1-12	The Widow's Choice	Lubin	950
1-13	Max Is Almost Married	Pathé	572
1-13	So Near but Not Quite	Pathé	410
1-16	Will It Ever Come to This?	Lubin	715
1-16	Easy Coin	Lubin	250
1-18	Uncle's Birthday Gift	Edison	995
1-19	Changing Cooks	Melies	980
	SCENIC		
1-9	In the Land of Monkeys and Snakes	Pathé	276
1-17	A Water Contest	Gaumont	168
1-20	U. S. Light Artillery in Action	Kalem	95
1-2	Dutch Kids	Pathé	197
1-10	The Hills of Corsica	Gaumont	243
1-11	The Home of the Seal	Edison	300
	INDUSTRIAL		
1-6	The Fire Department of New York City	Edison	400
1-11	Wood Carving at Brienz	Eclipse	320
	TOPICAL		
1-7	The Funeral of Count Tolstoi	Pathé	230

INDEPENDENT

Date.	Title.	Maker.	Length.
	DRAMA.		
1-2	The Wise Druggist	Imp	995
1-3	The Pinkerton Man	Powers	
1-3	In the Heart of the Sierras	Bison	900
1-3	The Pasha's Daughter	Thanhouser	
1-4	Straw Ride	Atlas	
1-4	Days of the Early West	Champion	950
1-4	The Wall Partition	Ambrosio	500
1-4	At Cedar Ridge	Nestor	
1-4	For Better or Worse	Revier	
1-5	Reunited	Imp	995
1-5	Antonio Toscarino	Itala	900
1-6	A Savage Girl's Devotion	Bison	900
1-6	The Rival Engine Drivers	Lux	367
1-7	A Woman Without a Heart	Powers	
1-7	The Red Light	Great Northern	
1-7	Queen of the Prairies	Columbia	
1-7	As the Master Orders	Reliance	900
1-9	An Arizona Romance	American	990
1-9	Their First Misunderstanding	Imp	998
1-9	An Erring Son's Awakening	Yankee	
1-10	The District Attorney	Powers	
1-10	An Indian Trapper's Prize	Bison	900
1-11	Sleepy Hollow	Nestor	
1-11	The Hour of Fate	Reliance	900
1-11	The Goose Creek Claim	Revier	
1-11	Sleepy Hollow	Nestor	
1-11	Bill's Widow	Champion	950
1-11	A Letter to the Stork	Atlas	
1-12	The Empty Shell	Imp	995
1-12	Joanna of Braganza	Itala	900
1-13	The Girl and the Burglar	Solax	
1-13	The Creek Claim	Bison	900
1-13	The Vote That Counts	Thanhouser	1,000
1-14	On Kentucky Soil	Reliance	900
1-14	The Recall	Itala	900
1-14	Monte Cristo	Powers	
1-14	A Homeless Boy	Great Northern	
1-16	Melody	Imp	995
1-16	The Folks Back Home	Yankee	
1-18	A City Wolf	Atlas	
1-18	The Will of a Western Maid	Champion	
1-18	Their New Minister	Nestor	
1-18	For the Child's Sake	Revier	500
1-19	The Bonanza King	American	
1-20	Returned to the Fold	Yankee	
1-20	A Reporter's Romance	Solax	
1-21	A Noble Heart	Powers	
	COMEDY		
1-2	Mrs. Gaylife's Visitors	American	970
1-2	The Great Medal Competition	Eclair	485
1-2	A Well Matched Marriage	Eclair	480
1-3	Beaux Not Wanted	Powers	
1-4	Trials of Tweedledum as Policeman	Ambrosio	500
1-5	The Tenderfoot's Roundup	American	950
1-6	The Night Cap	Solax	
1-6	The Royal Wishbone	Yankee	
1-6	Baseball and Bloomers	Thanhouser	
1-6	How They Tricked Father	Lux	498
1-7	Foolshead as Inspector	Itala	900
1-10	A Tip to Husbands	Powers	
1-10	Everybody Saves Father	Thanhouser	450
1-10	The Only Girl in Camp	Thanhouser	480
1-11	How Tweedledum Pays Bills	Ambrosio	500
1-12	Lucy's Lover	American	500
1-12	The Borrowed Flat	American	420
1-13	Bill as a Jockey	Lux	465
1-13	That Is My Name	Lux	438
1-16	The Battered Bride Grooms	American	525
1-16	A Dental Disaster	American	450
1-16	Jealousy of Sosthenes Ramulot	Eclair	478
1-16	My Wife's Hat	Eclair	482
1-17	A Montana Love Story	Powers	
1-17	Lover's Trials	Powers	
1-18	You Try It	Revier	500
1-18	The Country Girl	Reliance	900
1-19	His First Patient	Imp	500
1-19	The Rev. Goodleigh's Courtship	Imp	500
	SCENIC.		
1-11	Clouds and Ice Fields	Ambrosio	500
	SPORTS		
1-6	Salmon Fishing in Canada	Solax	

DAILY INDEPENDENT RELEASES

MONDAY: American, Eclair, Imp, Yankee.
TUESDAY: Bison, Powers, Thanhouser.
WEDNESDAY: Ambrosio, Atlas, Champion, Nestor, Reliance.
THURSDAY: American, Imp, Itala.
FRIDAY: Bison, Lux, Solax, Thanhouser, Yankee.
SATURDAY: Columbia, Gt. Northern, Itala, Powers, Reliance.

THE NICKELODEON

$2.00 Per Year | Published Weekly by ELECTRICITY MAGAZINE CORPORATION, Monadnock Building, Chicago | 10 Cents Per Copy

Vol. V | CHICAGO, JANUARY 21, 1911 | No. 3

THE NICKELODEON has a correct list of the places where films are shown in North America. These addresses have been stenciled and are quickly available for commercial uses. Some of the present manufacturers of films owe much of their success to this authentic list.

¶ We have now prepared a "Record of Films," including all the releases from July 1 to Dec. 31, 1910, making a booklet of 24 pages, 4¼ x 8½ inches (just right for the desk), which we purpose mailing to 16,000 exhibitors.

¶ This record is in two parts—"Licensed Films" and "Independent Films." The titles are arranged chronologically, under the makers' names. Everything will appear that is necessary for the exhibitors' information. We are sure he will keep the booklet until it is succeeded by a new edition of the same work.

¶ It is our plan to sell advertising in THE NICKELODEON'S RECORD OF FILMS. Ask for our proposition.

ELECTRICITY MAGAZINE CORPORATION, MONADNOCK BLDG., CHICAGO

THE NICKELODEON

PUBLISHED EVERY SATURDAY BY THE

ELECTRICITY MAGAZINE CORPORATION

MONADNOCK BULDING, CHICAGO

ED J. MOCK AND PAUL H. WOODRUFF, EDITORS — JAMES B. CRIPPEN, ASSOCIATE EDITOR

LONG DISTANCE TELEPHONE: HARRISON 3014

NEW YORK OFFICE: 1433 HARTFORD BLDG., 41 UNION SQUARE
LAURENCE F. COOK, Eastern Representative
TELEPHONE, STUYVESANT 1672

LONDON OFFICE: 36 MAIDEN LANE, COVENT GARDEN
S. RENTELL & CO., Representatives

Table of Contents

Terms of Subscription.—UNITED STATES, CUBA and MEXICO ..... PER YEAR $2.00
CANADA ..... PER YEAR 2.50
FOREIGN COUNTRIES WITHIN THE POSTAL UNION ..... PER YEAR 3.00
SINGLE COPY ..... .10

DISTRIBUTING AGENTS: The Western News Company and its International Branches.

NOTICE TO ADVERTISERS.—Changes of advertising copy should reach the office of publication not less than five days in advance of date of issue. Regular date of issue, the first and fifteenth of each month. New advertisements will be accepted up to within three days of date of issue, but proof of such advertisement can not be shown until the appearance of the edition containing it.

NOTICE TO SUBSCRIBERS.—Remittances should be made by check, New York draft or money order, in favor of THE NICKELODEON. Foreign subscriptions may be remitted directly by International Postal Money Order, or sent to our London office. The old address should be given as well as the new, and notice should be received two weeks in advance of the desired change.

ENTERED AS SECOND CLASS MATTER JANUARY 15, 1910 AT THE POST OFFICE AT CHICAGO, ILLINOIS, UNDER THE ACT OF MARCH 3, 1879.

Scene from the Essanay Feature Film, "A Sin Unpardonable."

THE NICKELODEON

AMERICA'S LEADING JOURNAL OF MOTOGRAPHY

VOL. V | CHICAGO, JANUARY 21, 1911. | No. 3

MOTION PICTURES OF THE UPLIFT CLASS.

EDITORS of short-story magazines tell us that there is just now a tremendous demand for so-called "uplift" stories. Indeed, so great is this demand that the little known writer finds some difficulty in disposing of stories of any other kind. As every sort of short story has its counterpart in motion pictures, we are already familiar with a number of examples of the uplift film. Conspicuous examples are "Healing Faith," "The Man Who Learned," "The Red Cross Seal," etc. We do not include in this category such films as "The Fly Pest," "Little Drops of Water," etc. They are not stories, but correspond rather to the popular science articles so familiar to readers of the best current magazines, and always so eagerly sought for.

The uplift dramatic film is peculiar. It is in a class by itself. It is usually not an educational subject in the ordinary sense of the word; rather it is an altruistic drama—a story of things and men as they should be. Granting that the primary purpose of the uplift film is to remedy evil and to encourage good, we must concede that it is a highly efficient medium for such work. The arrangement is in fact ideal. Its purpose is truly educational, but the musty flavor conjured up by that word is concealed in a sugar coating of drama and perhaps even comedy. Under the guise of relaxation and amusement we are educated, uplifted and inspired.

That is the aesthetic side of the uplift film. Perhaps we can hardly blame the average exhibitor for being more deeply interested in the commercial side. The exhibitor must needs entertain his patrons, but he is in business not for his own entertainment but for dollars and cents. If he can be convinced that educational subjects will bring him a larger attendance or a more permanent patronage than will comedy and drama, then educational subjects he will show, despite his very likely preference for the lighter vein. On the other hand, many an exhibitor with a strong liking for educational pictures is confining his program to drama and comedy simply because he thinks his audience prefers them. But in the uplift picture his personal preference and the preferences of his patrons meet on common ground. Purely as dramatic subjects, how could we improve "The Man Who Learned" or "The Red Cross Seal"? And yet what exclusively educational picture could exceed those subjects in their benefit to humanity? Commercially the uplift film has proven itself highly efficient. And this is not only because of its excellent dramatic qualities, not only for its entertainment value. It is because the uplift picture receives the enthusiastic support of all those influences which are ordinarily opposed to the motion picture. The co-operation of state and municipal boards of health, of anti-tuberculosis leagues and social bodies in general, inevitably leads to the co-operation of the big newspapers. The secret of the commercial success of the uplift film lies after all in the vast amount of free publicity it secures.

So far the uplift film is something of a rarity. Enough of them have appeared, however, to prove their value; and now, while the sociological problem and the uplift are the vogue, is the time to push their production. There is a market and a welcome for at least one uplift film a week, without losing any of that facility for gaining publicity which is the secret of their success. Let us grasp this opportunity.

THE MUSICAL ACCOMPANIMENT.

WHEN we think of opera we usually think primarily of the music and secondarily of the play. Indeed, opera is essentially illustrated music, rather than lyricized drama. An opera done in motography, then, is imperfect and incomplete. It represents only the visual portion of an entertainment whose major appeal is an oral. There is little incentive, therefore, to produce motographic opera unless the exhibitor can be relied upon to give his audience the musical as well as the spectacular part. There are exhibitors who, when provided with a motion picture film depicting one of the classic operas, would at once set about arranging music for its accompaniment. Such exhibitors are unfortunately comparatively few. On the other extreme we have those who claim to be exhibitors, who will probably make no effort to play the accompanying music even when it is provided. Between these two extremes we have the vast body of exhibitors who follow the line of least resistance; who take what is given and present it as they receive it; willing to improve their shows if the improvement comes to them ready made, but not willing to exercise their own ingenuity and initiative in preparing such improvement. Most of these would accompany a motographic opera with its appropriate music if the music was provided. Lacking such music, they would do either one of two things. If they were not very particular about the niceties of their profession they would probably run the film without any music or perhaps even run it with inappropriate and alien music. If their sense of proportion were more carefully adjusted they would probably refuse the film altogether on the ground that it was incomplete without the music and they did not care to give their audience an incomplete thing.

It may or may not be the legitimate province of the motion picture producer to furnish appropriate music for his production. Viewed from a critical and logical angle, it is not his province. From the broader and more human viewpoint, we have something to be thankful for that he is willing at least occasionally to go outside of his technical province in his effort to uplift the business. On another page we are describing a motographic opera about to be released by a well known film maker. The film in itself is remarkable enough as an example of

motion picture production. But we regard the music which is prepared to accompany it as even more remarkable; for the music was rearranged to fit the film, and it does fit it. The score is even provided with sub-titles coinciding with those on the film, so that the pianist has no excuse for deviating from the thread of the story.

It is to be hoped all exhibitors will understand that in this case the music is just as important as the film. When they have all realized that and have witnessed the effect of the combination upon their audiences and their attendance they will have a new appreciation of the force and power of music. And when all exhibitors realize the possibilities that music holds for them, the ten cent theater will have taken another big step forward.

IS THE MOTION PICTURE A BUBBLE?

IN Pearson's Magazine for January appears an article entitled, "Moving Picture Bubble," by Richard Barry, in which the author pays his respects to the motion picture in terms more forcible than complimentary. He compares it to a soap bubble—cheap, easy to make, fragile, alluring, appeals to children, empty, worthless, unenduring. The article is well written and well worth reading, if only to answer the shallow arguments.

Mr. Barry relates the rapid growth and amazing extent of the motion picture industry, and then proceeds to regard it from the moral, educational and religious standpoints. Under the caption "Transparently Unmoral"—which is, by the way, transparently disingenuous, the author evidently desiring to insinuate the charge of immorality without exactly stating it; he cannot really mean unmoral, because that would imply that motion pictures had no social influence, whereas his argument goes on to show that the motion picture does have a very potent social influence. Under this double-dealing caption Mr. Barry quotes some newspaper items reporting various evils and crimes incited by photoplays. His comment is as follows: "Where once the dime and nickel novels suggested ways of crime to unbalanced youth, the moving picture has come to make a more ready and more potent appeal." Quite so. But the question to be asked is, Are all moving pictures of the dime-novel, crime-suggesting variety? Upon the answer to this question depends the degree of harm which the moving picture may be exerting as a social influence. We venture to answer that the number of dime-novel photoplays involving crime and criminals is a decidedly small percentage of the whole and that the moral influence of the majority is all to the good. There may be need to suppress even that small percentage, but to condemn the motion picture as a whole for one little evil is unjust and illogical.

Mr. Barry next looks upon the motion picture as a means of instruction and edification. He finds that schoolmasters and preachers are repelling the new invader and that the motion picture will never drive out or supplant either church or school. Never supplant church or school. Well, bless our stars! Who ever thought that it would? The motion picture *has* entered the church and school and there is reason to believe that it will do so more and more, but not as an invader or a scourging conqueror—oh, mercy, no!—just as a humble and obedient servant trying to help along and render more efficient the established methods. Mr. Barry, however, argues that the motion picture has no business in such places because "the word of God comes to man in a spiritual vision, not in a pictorial vision," and because motion picture instruction "is in direct violation of the basic principles of pedagogy," which have ordained that "we learn only by taking thought" and "learning without thought is labor lost." Now this is pure mush and piffle, and shows that Mr. Barry has a poor argument or he would not be content to stand on such weak ground. What is the object for which motion pictures are used as an aid to pedagogical instruction? It is to furnish illustrations and point examples, to reduce the general to the particular, to render the subjective objective, to clothe the abstract in forms of the concrete. Before one really comprehends a general principle, one must reduce it somehow or other to a particular application, and it is the office of the motion picture, just as it might be that of any still picture, to aid this process. Does Mr. Barry object to illustrated text-books in the school room, to geographies and histories and physiologies with pictures on their pages, because forsooth the pictures are "in direct violation of the basic principles of pedagogy"? We trow not. In what sense then do motion picture illustrations differ from still picture illustrations, except that in many cases they are vastly more enlightening? To assert that certain scientific films—those on the micro-cinematographic order, for instance—"can have no real place in the school," is sheer inanity.

The question of motion pictures in the church is a more dubious one, but to object on the ground that "the word of God comes to man in a spiritual vision, not in a pictorial vision," is no way of settling the matter. The word of God can come in a very pictorial vision as numerous passages in the Bible testify. In fact, whenever God chose to speak to his enlightened people he invariably chose a visual form. And when it comes to moral teaching and objurgation, we seem to remember that the first Christian of them all constantly resorted to parable and word-picture as a means of bringing home his homilies. If the tale of the prodigal son is not a tabloid drama, and the parable of the house built on the sands essentially a motion picture, then we are decidedly on the wrong track. Jesus went as far as he could to make his teachings objective and would scarcely have scorned a "pictorial vision" as a means to his end. If there is room at all for picture and illustration in the church, we see no valid reason why the picture should not be a moving picture.

In a line or two sandwiched in near the end of the article, we find Mr. Barry himself is not so far from this opinion. "Which (the whole argument) throws the moving picture right back where it belongs—in the theater. It can have no permanent place in the church. It can have no real place in the school, *though it may be auxiliary to either or both.*" The italics are ours. That little clause tells the whole story. Nobody that we know of ever claimed that the motion picture might be anything more than an auxiliary to church and school. We wonder where Mr. Barry got hold of that extravagant notion which he has spent two pages in attacking. He seems to have been writing to fill space—good empty space.

We do not like the muck-raking spirit of Mr. Barry's article. There is to be detected in it the flavor of sensation-mongering and the animus of one who would make out that fair is foul. The implication of his article is that the motion picture is worthless for instruction, despicable as art, and dangerous as entertainment—a glittering pernicious soap-bubble that cannot endure. This may be true, but Mr. Barry comes a long way from proving it.

The Majestic Theater at Sioux City

By Charles F. Morris

EVERYBODY in Sioux City, Iowa, knows the Majestic Theater. Nearly everybody knows Jack Melcher, the general manager of that picture playhouse. Few citizens indeed of that thriving community but have passed through the Majestic's Moorish entrance at one time or another, to issue from its exits an hour or so later refreshed and entertained and instructed.

The Majestic has a street frontage of fifty feet. Its depth is ninety-five feet and the height of its front above the sidewalk is eighteen feet. The front is of smooth plaster with a white glazed finish. Its entrance and exit openings, as mentioned before, are decidedly Moorish in architectural treatment. In fact, the whole effect of the theater front is decidedly Oriental. The front is studded with about 325 two-candle power incandescent lights, which number includes those in the electric fountain sign seen just above the entrance.

Where the sidewalk joins the curb just in front of the theater will be seen an ornamental post bearing five tungsten lamps in frosted globes. This electrolier was installed by the management of the Majestic. The interesting part of it, however, is that shortly after the installation was made Mr. Melcher, the manager, was visited by a delegation of the city's business men, who wished to get all the information they could about the new lamp post. The result of their investigation was that ultimately the street upon which the Majestic is located was illuminated from one end to the other with fixtures which exactly duplicated the one in front of the theater. So the Majestic can take credit for starting at least one public improvement in Sioux City.

The Sioux City Majestic.
On the Left Will Be Seen the Electrolier That Started a Street Lighting Innovation in Sioux City.

Passing now through the peculiar doorway to the interior of the theater, we become aware of a burst of melody, which we find proceeds from an electric piano located in the balcony over the exit. The admission price, we may state, is ten cents for adults and five cents for children. The seating capacity is 280, all folding opera chairs. The operating room is eight by ten feet, made of heavy sheet iron with slides and door working on fire fuses, so that they close instantly in an emergency. The throw from the operating room to the curtain or screen is twenty feet. A plaster curtain or screen is used, 14 by 16 feet in dimensions, and as is well known there is no screen material superior to smooth plaster. The Majestic is heated by steam and has a 48-inch exhaust fan running all the time. Besides this, during the summer there are two ceiling fans and a number of side fans that stir up the air sufficiently to make the audience absolutely comfortable, and earn for the house the name of the coolest theater in the city of Sioux.

Mr. Melcher is an earnest advocate of the lighted house during projection. In fact, the Majestic is so light that one can read a newspaper in any corner of the house at any time during projection. The color scheme is red and green paneled in gold mouldings. The inside lobby is done in green burlap bound with gold. Besides its manager the Majestic finds use for ten employes. They are operator, doorman, cashier, two ushers, two singers, pianist, violinist and drummer. The show is open from 12 noon to 11 P. M. The program includes three reels of licensed films and two songs. An Edison machine is used.

Perhaps the most interesting part of Mr. Melcher's show is that he lectures every feature picture and works every possible sound effect. Furthermore it is noteworthy that he puts on the same show, gives the same lecture and renders the same effects whether the audience be one or a hundred in number. As an example of the effects used, Mr. Melcher mentions the Essanay subject entitled "That Popular Tune." He worked everything in it at once—singer, mouth-organ, grind-organ, etc., and had the whole town talking about it.

Mr. Melcher is somewhat particular as to the subjects he runs. He will not show a drunken scene or a gambling scene, and he is very much inclined to select for his programs those makes of films which he feels sure will not include such scenes. He is emphatic in his denunciation of the kind of pictures he does not like, and wishes they were never produced. In conclusion Mr. Melcher says earnestly: "I wish every theater would try a lecturer just one day; not a cheap man, but pay the price. They would never let him go, and their business would double." It seems that there is something here for other exhibitors to think about.

Final Hearing Exempts Wagner Camera

On January 9, Judge E. Henry Lacombe, in the United States Circuit Court for the Southern District of New York, heard affidavits and argument on a motion to reopen the matter of preliminary injunction in the cases against the Yankee Film Company and against William Steiner, Herbert L. Miles, Joseph Miles, Charles V. Henkel and the Atlas Film Company. Complainant's affidavits on the original motion for injunction had charged infringement by the use of the Wagner "Battleship" camera and a Brederson camera, but the defendants, although believing that the cameras were non-infringing cameras, had not been able to persuade either camera man to disclose the interior construction of his camera to them or to the court, and the court in its opinion filed on January 3 had commented on the non-production of the cameras and had granted the injunction apparently in the belief that the two cameras were Gaumont or "beater" type cameras. On the motion to reopen, heard January 9, the defendants were able to show and did show the Wagner "Battleship" camera to the court and described in affidavits so much of it as was necessary, the camera having been shown for the first time to the affiants on January 7 and 8. Strenuous argument too was made against the power of the court to impound films or pictures even when made on infringing cameras, and the further point was made that infringement by the Brederson camera had not been proved and that the defendants' Gaumont cameras had never been used by them and that the injunction against renting or selling the films should not extend to the carrying out of existing contracts even where the films had been made on infringing cameras.

On January 10 the court decided all of the above contentions in favor of the defendants, but entered an order for injunction, apparently based solely on the possession of Gaumont cameras by the defendants. The order as actually entered by the court is given below. This order expressly excepts the Wagner "Battleship" camera from the injunction and all pictures and films made on that camera. It makes no mention of the Brederson camera. It does not impound any pictures or films, even those made on infringing cameras, and it does not enjoin the renting or selling or otherwise disposing of any pictures or films, positive or negative, in fulfillment of contracts specifically made for sale or renting prior to the date of the order, even where such films had been made by the use of any infringing camera.

Defendants gave notice of intention to appeal even from the narrow and restricted order of injunction entered by the court.

The affidavits filed by the defendants showed that the Yankee and Atlas films are all now made by the use of the Wagner "Battleship" camera and have been for several months, and the action of the court expressly sanctions that business as entirely free and clear of all infringement of the Edison reissue patent No. 12,037. This is the first direct holding of the court that any commercially used camera does not infringe since the holding to that effect as to the original Biograph camera in the suit against the American Mutoscope and Biograph Company.

In the case against the Champion Film Company the complainant asked for the same order that it asked for in the case against the Yankee Film Company, and the counsel defending that company under the circumstances of the case refused either to consent to or to oppose the entry of the order, but reserved the right to move to resettle it if at any time it should become worth while. This the court permitted by adding to the order at the end the words "Without prejudice to a motion to resettle."

The order follows:

Complainant's motion for preliminary injunction and for further relief having come on to be heard on the bill of complaint and the affidavits of George F. Scull, Mrs. Minerva Mullen, Edwin I. Standish, Joseph F. McCoy, Charles H. Wilson and Thomas A. Edison for complainant, and Alfred H. Saunders, Herbert L. Miles, William Steiner, Joseph R. Miles, Leon Wagner, Charles Meyer, H. C. Matthews, Leonard Day, Karl S. Deitz, Edmund Quincy Moses and William Friese-Greene for defendants, and after hearing, orally and by briefs, J. Edgar Bull, Esquire, and Philip Farnsworth, Esquire, for the motion, and Seward Davis, Esquire, in opposition thereto, and the following affidavits submitted on the settlement of this order, Steiner, January 9; Freeman, January 9; Wagner, January 9; Smith, January 9; Moses, January 9; Henkel, Matthews, Goldin and Miller, January 9; Menkel, January 9; W. H. Kenyon, January 9, and after due consideration, it is hereby

Ordered that a preliminary injunction issue herein enjoining the defendants and each of them, until the final hearing and determination of this cause from directly or indirectly making, using or selling any apparatus containing or embodying, or adapted to contain or embody, the inventions patented and secured to the complainant by claims 1, 2 and 3 of the reissue patent No. 12037 issued September 30, 1902 to Thomas A. Edison, being the patent here in suit; and from making, using or selling any camera like or substantially like the Gaumont or so-called "beater" type of camera; and from otherwise infringing upon the rights of complainant under said claims of said patent in suit; and from selling, giving away, renting or otherwise disposing of any pictures or films, either positive or negative, which have been made directly or indirectly by or for them or either of them by the use of any infringing camera; except in fulfillment of contracts specifically made for sale or renting of any such film prior to the date of this order; and it is further

Ordered that any and all cameras in the possession of the defendants, or either of them, or under their control, which infringe the said claims of said patent in suit, be forthwith by them delivered to their counsel as an officer of this court to be impounded in his custody until the final hearing of this cause; and said counsel is hereby authorized and directed forthwith as an officer of this court to take possession of said cameras and to keep them in his care and custody unused until the further order of this court; and it is further

Ordered that the bond filed herein by the complainant on the fourth day of January, 1911, be and the same hereby is canceled.

This order does not apply to the camera of Leon Wagner exhibited to the court on the settlement of the order, nor to any films, negative or positive, produced through the operation of said camera.

Pictures in Colombia

Vice Consul General Charles H. Small, Bogota, says that in Bogota, with a population estimated at 80,000, there are no theaters devoted exclusively to the exhibition of moving pictures. In one place similar to the average moving picture house of the United States cinematograph exhibitions are given three nights a week throughout the year. Similar entertainments are given occasionally in a regularly equipped theater. For some months past moving pictures have been the principal feature at the leading park there. These exhibitions last two to two and one-half hours and the prices of admission range from ten to forty cents gold. The attendance is very good.

There are no picture machines of American manufacture in use there, the four cinematographs in the city being of European make. The great majority of the films are bought outright from French and Italian houses.

It is said that an amusement company has recently been organized to produce nightly exhibitions of moving pictures at the principal park in Bogota.

A Motographic Opera

Pathés Musical Photoplay

A NEW word must be coined to describe the Pathé release of January 27. Following the analogy of *photoplay* let us call it "photo-opera." It is an adaptation of "Il Trovatore" with incidental music taken from Verdi's famous opera. There is music for every scene, all to be found in a book of 26 pages which accompanies the film, the proper excerpt for each scene being indicated by the sub-title of that scene. The musical arrangement was made under the direction of Pathé Frères in the belief that it will add value and popularity to their release.

It is an interesting experiment and the performance is looked forward to with keen expectation. If

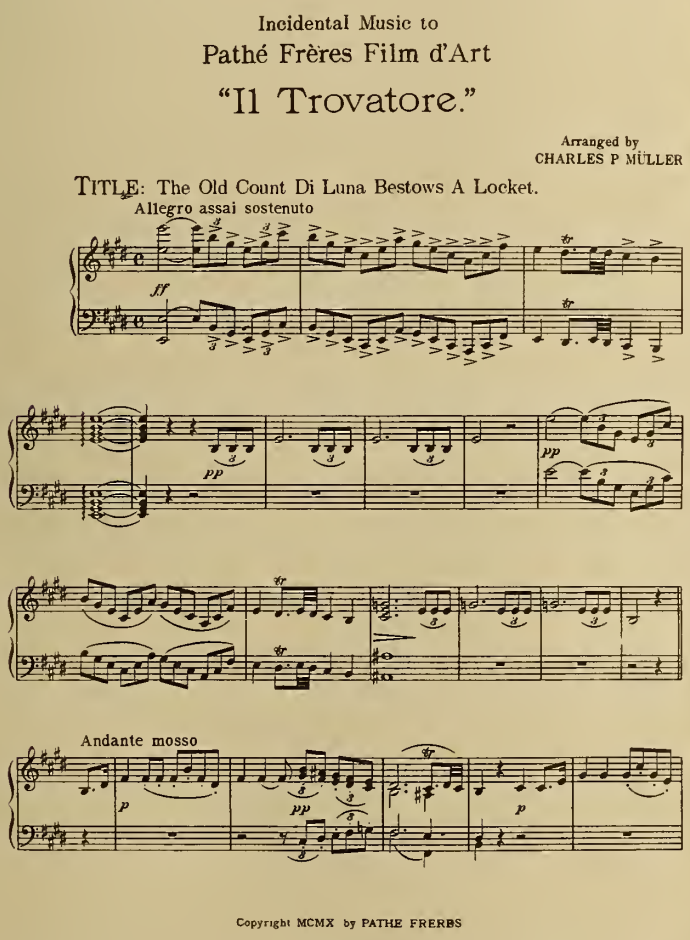

the event proves successful, as it undoubtedly will, there is reason to predict that it will mark the beginning of a long line of similar adaptations of opera. It may also mark the inception of a new era in incidental music for photoplays, exhibitors and their piano artists coming to a sudden realization of the excellent and beneficent effect of appropriate music. The strident and villainous ragtime which has so long accompanied the exhibition of motion pictures has been one of the banes of the industry, and has done much, along with that other degrading incubus, the cheap vaudeville act, to give the photoplay a reputation below its merits. One experience of elevated and suitable incidental music may have a wholesome effect on the piano pounders, and also give the exhibitor a chance to test the popularity of a refined program. It is to be hoped, therefore, that all exhibitors will secure the book of music that has been arranged by Pathé Frères

Leonora Pleads for Manrico's Life.

to accompany the film. This book may be procured from any licensed exchange for a nominal price. It will form a novel advertising feature, and ought, owing to the wide popularity of the Verdi opera, to attract full houses.

The book is well worth having for itself alone. It is a neat substantial specimen of the music publisher's art, containing about fifteen excerpts from the opera, thus forming a musical resumé of a famous masterwork. As the music is highly expressive, even catchy in a way, it should form a permanent acquisition to the repertory of the photoplay accompanist, to be used on all occasions.

Manrico Rescues Leonora.

It may serve in many cases as a means of injecting variety and new blood into a worn-out rag-time system.

As to the film itself, it is a very fine one, a masterpiece of production. The settings are superb, finding their locale among the ancient castles and palaces of Italy. We see towering walls and courtyards and

gardens and Gothic doorways resplendent in their antique grandeur. No painted rocks and canvas ramparts here! These backgrounds would afford a worthy subject for a scenic release. They form here the setting for a medieval melodrama of great dash and vigor. There are kidnappings and executions and duels, ambuscades and onslaughts, lords, ladies and feudal retainers, all typical of that romantic and turbulent time. There is enough blood and thunder to supply a dozen Western melodramas, but it is all kept by some magical process within the bounds of art. The costumes and accessories are of great beauty and accuracy, bespeaking deep research and large expense. And it is all in color—one of the best examples of film coloring ever turned out by Pathé Frères.

The story of Il Trovatore is something as follows: The Count di Luna has two young sons, one of whom, Manrico by name, is kidnapped by a gypsy named Azucena, who steals the child out of revenge for the death of her mother who was burned as a witch by the Count di Luna at sometime previous to the story. She rears Manrico as her own child and he becomes a troubadour, or traveling musician. As such he wins the love of Leonora, a beautiful lady. Leonora is also besought by the young Count di Luna, successor of the aforementioned count, and brother of Manrico, although the brothers are not aware of their relationship. Count di Luna, becoming jealous of Manrico, provokes a duel, but during the contest one of the count's retainers treacherously stabs Manrico in the back and they leave him for dead. The count carries this news to Leonora, who, being grief-stricken, prepares to enter a convent. But just as she is about to enter the convent door the count appears and starts to drag her away by force. In the meantime, however, Manrico has recovered from his wounds and appears on the scene just in time to frustrate the count's fell purpose. He conducts Leonora to her ancestral castle and preparations for their marriage ensue. The vengeful count now seizes Manrico's supposed gypsy mother, Azucena, and announces his intention of burning her at the stake. Manrico hears of this cruel plan on his way to the altar with Leonora, and at once postpones the wedding, rushing away to the rescue of Azucena. He only succeeds in effecting his own capture, however, and the count throws him into the same dungeon with Azucena. Leonora, hearing of her lover's plight, hastens to the count and begs for mercy. The count offers to spare Manrico's life on condition that she marry him (the count). She promises to do so and hastens to Manrico's dungeon to liberate him, herself taking poison on the way, as she cannot permit herself to become the Count di Luna's bride. Manrico lingers in the dungeon to say farewell to Leonora, who dies in his arms. At this point the count enters and finding Leonora lifeless, orders Manrico's execution, which forthwith takes place. Azucena now awakens from a stupor and calls for her son. The count informs her of his execution. Azucena then reveals to him his relationship to Manrico, and the play closes on the count's dismay and wild remorse.

This plot, as disclosed in Verdi's opera, is notorious for its mad fatuity and Pathé Frères showed no little temerity in tackling it. But by dint of addition and rearrangement and with the help of abundant explanatory sub-titles, they have produced a photoplay that is quite comprehensible and dramatically effective. With its musical accompaniment the film should prove highly impressive, and bespeaks high tribute to Pathé Frères for their novel enterprise.

Auto Travelers Give Pictures Shows

With Amarillo, Tex., as their destination and on condition that all expenses of the trip be met by receipts from entertainments they give in various towns along the route, a party of automobilists from Kewanee, Ill., are en route to the Texas city, confident that they will win the $1,000 wager which will be theirs if they meet all the conditions imposed by the man who has posted the money.

In the party are Mrs. Chris Taylor and her little son, Walter Taylor; William Winn and William Avery. They are making the journey by easy stages, giving motion picture exhibitions in many of the smaller towns through which they pass. These exhibitions are not given in the larger places because of the competition with the moving picture theaters. The automobile carries a complete motion picture outfit.

The big touring car bears the banner "Dreamland Car, Kewanee, Ill." Avery drives the machine and is managing the tour for the party. All are capable vaudeville artists. Mrs. Taylor is making the trip as a representative of the man who made the $1,000 wager to see that all conditions of the contract are fulfilled. She also has charge of the finances of the party. Winn is an expert piano player and singer and takes part in the entertainment in the towns along the route.

Ely Van Ronkel, manager of a film exchange in Chicago, wagers that the party cannot make the trip from Kewanee to Amarillo and return on the money they take in at moving picture entertainments. They show only the best Seligs and Vitagraphs and of course the trip is a great advertisement for the companies manufacturing them. Yet, the trip at this season of the year is by no means all fun. If they fail, they are to pay Van Ronkel $1,000. If they win Van Ronkel pays the wager.

In every town where stops are made halls are rented for the night and there the pictures are shown, a small admission fee being charged. They are looking for the money, for if they run out of funds and have to wire back home for help the wager will be lost. The car carries a neat outfit. A chest contains a machine, eight of the latest films, a big curtain upon which the pictures are shown, and other paraphernalia for use when ordinary store rooms are used for the exhibitions.

Theaters Restricted in San Francisco

At the request of Norman Hall, chairman of the board of motion picture censors, of San Francisco, Cal., Supervisor Herget introduced an ordinance prohibiting motion picture theaters and other places of popular amusement within certain prescribed limits. The ordinance provides that no permits or licenses shall be issued for a public roller skating rink, revolving wheel, chutes, toboggan slides, kinetoscope and phonograph parlors, panorama or cyclorama, moving picture exhibition, theater or concert hall within 200 feet from the front line of any church or school or within 100 feet of the property line on the side or rear of any church or school. These restrictions shall not apply to any building now constructed or in course of construction.

New Amusement Patents

By David S. Hulfish

It will be the purpose of this department to list all United States patents, as they are issued, which pertain to any form of amusement business, giving such data in each case as will enable the reader to judge whether he wishes to see the complete drawings and specifications of the patent. When patents of special interest to THE NICKELODEON readers are encountered, the descriptive matter herein will be amplified accordingly. A complete copy of drawings, specifications and claims of any patent listed will be furnished from this office upon receipt of ten cents.

PATENT No. 966,342. Moving Picture Taking, Viewing or Projecting Apparatus. Patented to Ferdinand von Madaler, London, England, assignor to the Rotary Photographic Company, Ltd., of same place.

The apparatus is adapted to take the pictures directly from the moving subject, or to reduce the images from an ordinary cinematograph film. Its principal object is to provide a convenient apparatus for projecting or viewing pictures from a reduced or microscopic record on a flexible transparent film.

The picture record comprises a series of images following each other in rows. The picture images if on an endless band form preferably a spiral line, passing repeatedly around and around the band and progressing slowly from one side of the band to the other. If on a long strip having two ends, the pictures may be arranged in rows parallel with each other and with the edges of the strip as well. For projection, such a strip is joined at the ends and passes through the film gate as many times as there are rows of images on the film, shifting laterally between the successive trips through the film gate so that the different parallel rows are brought before the lens successively.

When a negative of a scene has been taken by the device of the invention, either by direct photographic exposure upon the subject, or by a copying process of reduction from a positive print of ordinary cinematographic film, positives may be printed from it, either upon transparent film for projection purposes or for direct viewing by light transmitted through the positive film; or a print upon bromide paper or other photographic printing paper may be made at a comparatively small cost, which then may be viewed in the device of the invention by direct vision, lighted from the viewing side.

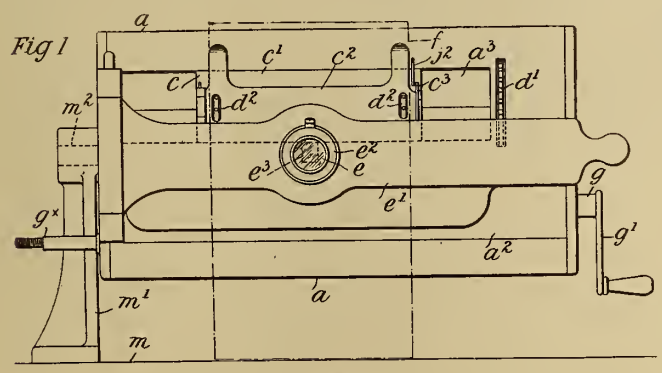

966,342.

This process reduces the cost of copies of the negative very greatly. A single negative may be reproduced in either manner, for projection or for opaque views.

Fig. 1 illustrates the apparatus as designed for viewing an endless band of film with the images arranged in spiral form thereon. This figure is a front elevation of the device. The general appearance is that of a phonograph of the cylinder type, and the picture records may be bought as phonograph records are bought, except that they will be found more convenient by being lighter, and because they may be packed in shallow boxes, collapsed into a flat oval, but not entirely flat, to avoid creasing the film.

The crank handle g' on the winding shaft g may

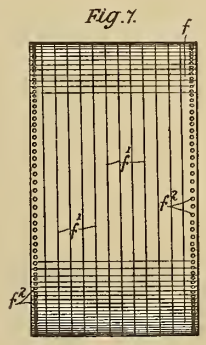

966,342.

wind a spring motor, or may act directly to turn the mechanism, as in turning a motion picture projector.

Referring to Fig. 1, *a* indicates the casing of the apparatus, enclosing the motor. Within the casing is a chamber containing a hood for an electric light, or a lens and mirror for directing the light from a gas or oil burner, the hood being provided with a window for illuminating the film, and preferably with a condenser lens; *c* is the film carriage, which moves longitudinally of the casing along fixed guide rails in the casing, and along an intermediate inner rail which serves also as a longitudinal feed shaft. The film is propelled through the film gate by the sprockets *d2* and *d2*. The front part of the casing is removable and comprises a rounded or semi-cylindrical plate *a2* having a slot *a3* over which the film is moved and between it and the lens *e carried* by a hinged bar *e'* which can be turned back out of the way of the strip. The endless band or loop of the film is shown at *f* by a parallelogram of dot-dash lines. The picture-to-picture movement of the film, the vertical movement, takes place between curved guide bars comprising a back plate or platen *c'* of the carriage *c*, and a front plate or film window *c2*, the film window being a long horizontal slot.

The lens **e** is mounted in a focusing tube *e2* carried by the hinged bar *e'* which has an opening *e3* of the size of the small picture images of the film and which opening is opposite the slot *a3* of the removable plate *a2* which slot in turn is opposite the window of the inside lamp hood, so that light may be projected through these openings, through the film which passes between the openings, and through the lens. From the lens the picture is projected in an enlarged form, or if desired may be viewed directly through a magnifying lens.

Fig. 7 shows a view of the endless film record. The vertical lines *f'* are lines dividing the rows of pictures,

or the successive convolutions of the single line of pictures which winds spirally about the band. *f2* are the perforations for engaging the sprockets of the driving mechanism.

967,293. Kinetoscope. Edward L. Aiken, East Orange, New Jersey, assignor to Edison Manufacturing Company, West Orange, New Jersey. It is worthy of note that this application was filled April 12, 1905, having remained in the patent office more than five years before issuance.

The mechanism is shown in the accompanying figure, which is Fig. 1 of the patent. The specification says:

In the apparatus shown in Fig 1 the sleeve 9 is driven by means of a belt 21 passing over a pulley 22 and the latter is fixed on one of the shafts driven by the gear train *a*, such as the shaft *d* which carries the sprocket *c* for drawing the film *c* from the supply reel to form the loop *f* It is obvious from this description that whenever the operator ceases to drive the train of gears or slows up in the speed of rotation of the crank *b* sufficiently, the governor weights 12 and sleeve 10 will drop and close the shutter 5, and that the shutter will be opened or raised only when the crank is turned at or above a given speed.

The claims are very broad, and are given in full below. These claims cover every possible form of fire

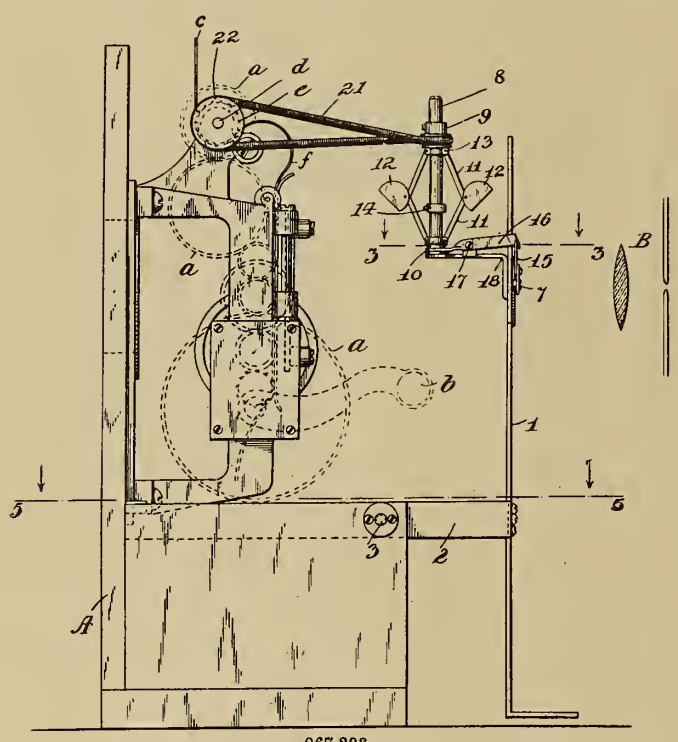

967,293.

shutter where control is taken directly from the film and not directly from the handle driving the motion head. Apparently, from the assignment, these claims will be controlled by the Motion Picture Patents Company of America. The claims are:

1. In a kinetoscope, the combination with film moving mechanism, of a source of light, a movable shutter normally occupying a position between the light and the film, and means operated by the moving film for automatically moving said shutter out of said position, substantially as set forth.

2. In a kinetoscope, the combination with means for supporting and progressively moving a film, of a screen in the rear of the film supporting means and provided with an opening, a movable shutter normally closing said opening and means adapted to be operated by the moving film for moving said shutter out of said position, substantially as set forth.

3. In a kinetoscope, the combination with a frame provided with an opening and means for progressively moving a film across said opening, of a movable shutter behind said frame, and means adapted to be operated by said film for moving the shutter, substantially as set forth.

4. In a kinetoscope, the combination with a frame provided with a light opening and means for progressively moving the film across said opening, of a screen behind said frame and provided with an opening in line with the first named opening, a movable shutter normally closing the opening in said screen, and means adapted to be operated by the moving film for moving the said shutter out of its said position, substantially as set forth.

5. In a kinetoscope, the combination with means for supporting and progressively moving a film, of a shutter in the rear of said film supporting means and centrifugal means adapted to be actuated by the moving film for operating said shutter, substantially as set forth.

6. In a kinetoscope, the combination with means for supporting and progressively moving a film, of a shutter in the rear of the film supporting means, centrifugal means for operating said shutter, a loose pulley around which the film is adapted to pass, and a driving connection between said pulley and the shutter operating mechanism, substantially as set forth.

7. In a moving picture apparatus, the combination of two frames removably secured together, one frame provided with mechanism for intermittently feeding a film across a display opening and the other frame carrying a shutter adapted to cut off the projecting light from behind said display opening, and centrifugal means for operating said shutter, also mounted on said last mentioned frame substantially as set forth.

967,332. Automatic Vending Machine. Robert B. Craig and Albert Coffman, Kansas City, Mo., assignors to Automatic Vending Machines Company, of same place.

967,347. Automatic Vending Machine. Andrew Downey, Columbus, Ohio.

967,418. Automatic Vending Machine. Wm. H. McMannus, Los Angeles, Cal., assignor to U. S. Automatic Vending Machine Company, of same place.

Health Exhibitions in Ohio

The Lake Shore Film and Supply Company, Cleveland, Ohio, has closed negotiations with the Cleveland Anti-Tuberculosis League, whereby they are giving exhibitions throughout the city of such films as "Healing Faith," "The Fly Pest," "The Man Who Learned," and "The Red Cross Seal." The object of the league, as its name so well implies, is to stamp out the white plague. The exchange calls such exhibitions "health exhibitions," as their object is to bring before the people in a striking manner the importance of cleanliness and attention not only to food and clothing but also the habitation. The exchange has also supplied special exhibitions consisting of the above mentioned titles, also "Little Drops of Water," to the State Board of Health of Ohio, which exhibition was given at the Sinton Hotel at Cincinnati; also an exhibition for the health department of the city of Toledo. Exhibitors throughout that section are beginning to realize that an exhibition of a film such as "The Red Cross Seal" is a boost for the theater, due to the fact that a picture of this nature receives quite a bit of publicity, thereby creating a demand with the general public to see it as soon as issued.

The Lake Shore exchange, under the guidance of its president, Mr. E. Mandelbaum, has always catered largely to the scientific and educational program, and claims with considerable reason to have done more in this line of work than any other agency.

Who's Who in the Film Game

Facts and Fancies About a Man You Know or Ought to Know

FILM men are essentially film men. There is no exception. They are not born or made—like Topsy, they just "growed." There are lots of film men, more today than there were yesterday, and still more tomorrow. And if you are a really for sure film man it doesn't matter when you become such, or what you were doing before.

It is generally believed that film men come out of the show field. It is certain that there are exceptions to this presumption, but it is only a detail. Ferd Singhi may or may not be the exception, but he says nothing. If he covered his slate with cyphers when he was little; whether he grew up in the country and stole melons in season, or cavorted on the vacant lot in the city is a mere bagatelle in speaking of the now of things. Singhi may have told somebody, some time, but he's terribly silent under the spot light—used to it, probably, because of the glare of it in the new studio we hear so much about. But there should be a start in this ramble, so here goes.

Ferdinand W. Singhi is the general manager of the Lubin Manufacturing Company, Philadelphia. He became identified with Lubin about six years ago, breaking into the game at the old rental department on Market street. Coincident with Singhi's coming was Lubin's going, by which is meant the going with its slangy "going some" application. You may remember that Lubin's name was connected with all of the big eastern picture theater projects about then. Money was poured into the making of substantial, handsome structures and to be used invariably as picture theaters. If people thought these projects were inspired by a crazy man, they were charitable enough to keep their opinions, because one look at the man behind would suggest to them that it wasn't their money after all.

If He Likes Anything Better than His Smoking, It Is His Clothes.

Well, it turned out happily, because these photoplay houses all made money—became popular and sensible investments. The theaters themselves were easy to dispose of when that subject became an issue. Besides, Lubin was supplying the films, and the film renting business is something of a business in itself. Somewhere in the Lubin organization was this same Ferd Singhi. It wasn't easy to lay your finger on him, but he was there. You could feel his presence when you pushed open the door to the general office, and if he was too busy to see you then, he would see you later. That's characteristic of the business even yet!

During Mr. Singhi's incumbency in the rental department, everything boomed. It blew along like an ice boat in proper ballast. From renting, the step to making held out its allurements and the disposal of the theaters brought the big fund required to engage in film manufacture. Singhi had made good in the preliminary skirmishes and it was logical to give him charge of the broader and more comprehensive operations. He became Lubin's general manager in charge of manufacturing particularly.

The old Market street headquarters were not adequate for the requirements of making, and among the first problems to confront Mr. Singhi was a suitable place for a factory and studio. This quickly took the form of the splendid buildings now occupied by the Lubin Manufacturing Company at Twentieth street and Indiana avenue. Anyone familiar with Chicago's streets and avenues must remember that Lubin is in Philadelphia.

But aside from a capacity to do twenty-eight hours work in half the time, Singhi is pleasant. There isn't a wrinkle in his skin—no furrows in his brow. He is loved by his employers because he works with them. He knows their first names. With full knowledge and experience of the thing in hand he is competent to take hold with his fellows and when occasion demands he does that.

Singhi's nerve is monumental. He smokes everything, but likes the open air, free-burner brand best. Undaunted, he rides the limited trains with a calabash in his teeth. If he likes anything better than his smoking, it is his clothes. Immaculate as a girl, he likes the duds that set him off best. The picture printed on this page doesn't do him justice. The photographer who made it wasn't looking and Singhi—modest as a spinster—tried to hide behind his hand The engraver has taken the hand away from his face, built up the half thus obscured, put on the part of the coat beginning at the southwestern corner of the plate and extending to the chin, and taken a number of other liberties with his likeness. So you see only a part of the original Mr. Singhi. Perhaps, some day, you'll read the story drawn more closely to the facts—see the face in better proportions.

Motion Pictures in Uruguay

Vice Consul F. Landon Goding, Montevideo, states that the moving picture theaters in Montevideo number twenty, and are considered one of the principal amusements. The films used are of European manufacture, although a few American views have been shown and have met with favor. These latter are usually scenic views, such as Niagara Falls, while the European include scenery, parades, industries, and dramatic views. The exciting dramatic views appeal to one class, while the views that tend to educate appeal to another; the comic views appeal to all.

As the American films already shown have compared very favorably with those of European views, it would be of general commercial value to the United States to introduce more views showing the larger cities, the working of large factories, steel mills, etc., scenes of amusement parks, summer resorts, naval and army reviews and sham battles, college, athletics, fire scenes in the large cities, and farm, irrigation, and stock-show scenes. Comic views should be included as well, as the people there are great lovers of comedy.

There is no better means of acquainting people with the habits, customs, and industries of a foreign country than by the use of the moving picture, and that fact is proved in South American countries when one visits a picture theater and observes how familiar the public is with scenes in Europe. On the other hand, when an American view is shown, although an interest is manifested, the audience plainly shows that it is entirely foreign to them. Even the illustrated magazines in the reading room of this office attract attention to city and industrial scenes in the United States and bring forth many comments on the "Great Republic of the North."

The largest importer of moving picture supplies in Montevideo imports practically all the films used there and has some 500 rented throughout Brazil. He is also arranging for an agency in Buenos Aires and later in Chile, so as to be able to send the films throughout South America. Were American moving picture companies to introduce their films there, showing the above-mentioned places, it would not only result in a good business for them, but would benefit the interests in general of the United States in South America.

The customs duties on moving picture films totals about 40 per cent on a valuation of $3.62 per 2.2 pounds. Films entered to be shown and then sent out of the country do not escape the customs duties. All descriptive matter shown on the films, as well as the name and the directions to the operator, should be written in Spanish.

The moving picture machines now in use are of French make and give satisfaction for the first two or three months, when the light gives much trouble to the operator. A German firm made an attempt to introduce its machines and the agent succeeded in making arrangements to change all the machines then in use for the German machines, but as the company would not alter its machine from direct to alternating current to meet the conditions there it was forced to abandon the project.

As the importer in Montevideo practically controls the importation of machines and films in this city and intends to establish agencies throughout South America, he would be in a position to suggest the necessary changes to meet the requirements throughout South America. The machines sent to Montevideo should be equipped with a 220-volt alternating current light and so constructed as not to require the use of extra fittings, such as resistance coils, etc.

There is an opportunity for American moving picture supply companies to introduce their films and to replace the machines now in use, provided they will send a good machine to be tried and then make the necessary changes to meet the requirements in the different countries. In advertising their films, samples should be sent with as clear description of the picture written in Spanish as possible.

The importer mentioned intends to go to Europe in a few months, but if he could make as good or better arrangemnts with an American firm he will visit the United States also.

Municipal Pictures for Des Moines

Exploiting Des Moines, Iowa, by means of moving pictures is the latest wrinkle in municipal advertising.

The plan of supplying to moving picture companies in Iowa and other states films showing the beauty spots of Des Moines is being considered by the Des Moines Admen's Club.

Although the club now has numerous irons in the fire, prominent members of the organization are advocating the promotion of the plan.

According to the new system of municipal publicity, the club is considering the advisability of securing the co-operation of the other booster organizations of the city in more firmly establishing the fame of the Des Moines plan and the "city of certainties." If the plans are carried out expert moving picture operators will be secured to take the pictures.

The operators will be paid by the Des Moines boosters and the expense of developing and manufacturing the films will be borne by local men. Then the pictures will be sent over the circuit of the moving picture houses of the country to those managements of theaters who wish to use the pictures free of charge.

Considerable ingenuity will be employed in securing attractive pictures. It is desired to make the films interesting by adding a few features that will eliminate the cut and dried characteristics of scenic films.

An exhibition run by the fire department of Des Moines, which is well known for its efficiency, probably will be included in the scheme. If it is considered advisable elaborate scenarios will be included in the films, with Des Moines scenery and buildings as a background.

As it is desirable to include the river front and the civic center in the films, it is probable that the work will be withheld until spring, when the new municipal building is completed and the river front has attained a more imposing appearance. The admen declare that Des Moines is prettier in the spring and summer than the majority of the cities of the middle west.

Des Moines citizens undoubtedly will be given the first opportunity to witness the films that will be sent over the country as mute publicity agents for the city. There are many people who live in the city who do not appreciate what a good place Des Moines really is and how many beauty spots are included within her limits, the boosters say. A feeling of personal interest will undoubtedly attract hundreds of loyal Des Moinesers to the display of the films.

Some Questions Answered

By William T. Braun

In this department, answers will be given to questions upon any subject in connection with the conduct of moving picture exhibitions, the operation or construction of moving picture machines, the making of pictures or films, or any questions pertaining to the amusement business which can be answered without specific reference to any person or company. Questions are invited, and will be answered as promptly and as fully as possible.

LOCATING THE SCREEN.

The screen for the picture in our theater is twelve feet high and sixteen feet long and the ceiling fifteen feet high. The screen is down so low that the people in the rear seats of the house cannot see the bottom of the picture. Can you explain the most economical way to adjust this?—N. A. A.

THERE are several ways of remedying this. One solution would be to raise the screen until the top of it touches the ceiling. This would give you but three feet from the bottom of the screen to the floor, not enough to clear the top of the people's heads. The screen ought to be at least four feet from the floor, unless the floor is inclined enough to enable the people in the rear to look further down. But if the seats are placed very close to the screen it is best not to have the picture up too high, as it makes it necessary for the people in the front seats to look up continually. Another solution would be to raise the rear seats. As both of these would entail considerable expense the only alternative is to reduce the size of the picture.

The size of the picture is plenty large enough to permit reducing. This may be accomplished in two ways. One is to move the projection machine nearer the screen, thereby reducing the throw; or a projection lens of greater focal length may be substituted for the one which you have on the machine. Unless the operating room is plenty large enough so that the machine may be moved forward, the cheaper by far of the two above methods is to purchase a different lens.

As the ceiling is fifteen feet high, the picture ought not to be higher than ten feet six inches, leaving four feet six inches to the floor. This may appear somewhat high above the floor, but unless the rear seats are elevated the people in those seats cannot see. A picture ten feet six inches high would be fourteen feet five inches long. If you gave the throw of your machine, that is, the distance from the machine to the screen, I could tell you what focal length lens to use; but as you do not I am giving a simple formula whereby you may find the focal length. Let D be the throw, S the size of the slide mat, two and three-quarter inches high by three inches long, F the focus of the lens and P the size of the projected picture on the screen.

$$\text{Then } F = \frac{S \times D}{P + S}$$

This formula will give the focal length of the lens for the stereopticon picture. To find the size for the motion picture substitute the size of it or 11/16 inches high by 15/16 inches long for that of the stereopticon slide. For instance, if the throw is 70 feet substituting the known values for the letters we have

$$F = \frac{\frac{11}{16} \times 840}{126 + \frac{11}{16}} = 4\tfrac{1}{2} \text{ inches focal length.}$$

As the proportions of the slide and film are not the same, the stereopticon picture projected can match that of the motion picture one way only. In your case the best way would be to have the heights of both pictures the same. Substituting the size of the slide for S in the above formula we have

$$F = \frac{2\frac{3}{4} \times 840}{126 + 2\frac{3}{4}} = \frac{2310}{\frac{517}{4}} = 17.8 \text{ inches.}$$

A lens with a focal length of 18 inches would be used. With a throw of 70 feet this lens would give you a projected picture 10 feet 5 inches high by 11 feet 4 inches long.

By substituting the throw which you have in your theater in the above formula, you can find the correct lens to give you a picture of the desired size.

* * *

CARE OF LENSES.

Kindly give me a few directions on the care of lenses, both condenser and objective. Also, I am having a large amount of trouble with the breaking of condenser lenses. Can you give me a remedy for this?—Ed. V.

TO secure the best results the lenses both condenser and objective must be kept perfectly clean, and should be projected as far as possible from dust and finger marks. A soft piece of linen is the best kind of a cloth to use in cleaning lenses. Some operators advocate the use of alcohol or other polishing materials, but it is best not to use anything else but water. There is no hard and fast rule as to how often they must be cleaned, but at least the outside surfaces should be cleaned every day by breathing on them and wiping lightly, with a circular movement, to remove any finger-marks which are bound to come on them.

In removing the lenses from the casing or mount, care must be taken so that they are replaced in the same position, otherwise you will have trouble.

Extra lens should not be kept in a damp place or exposed to the heat of steam pipes for a long time.

There is a difference of opinion among operators as to the cause of the breaking of condenser lenses. The main cause is the unequal expansion or contraction caused by sudden extreme changes in temperature. Glass when heated expands and if the mount of the lens is too light there will be no room for the expansion of the lenses and they will break. If a round mount is used and the lenses held in position with a screw ring, this ring should not be screwed up tight to the glass. There is hardly any danger in letting them be too loose, as they are better too loose than tight. The lenses will not become so hot if the mount and lamphouse are ventilated so that the heat of the arc lamp may be carried off. For this reason it is best to take care to clean the screen over the top, round holes on the side, and rabbett of the lamphouse, as carbon ash readily collects there. Also, if the mount is ventilated the holes must be kept clean and not covered up in screwing the mount to the lamphouse.

Lenses when heated should not be removed from the mount, exposed to cold draughts or have the breeze from a fan blowing on them, as the sudden cooling is sure to break them. If the carbons are very close to the lenses and they flame, the extra amount of heat will cause them to break. This can be avoided by getting lenses of

the correct focus so that the lamp can be moved farther away from them and the heat will not be so excessive. A good idea is to cover the lamphouse when you leave it in the evening and cold nights, so that it will cool off gradually.

If the lamphouse has been in a cool or damp place for some time moisture will collect on the lens surfaces when the heat of the arc reaches them. As soon as the parts are uniformly heated no more moisture will collect. It is well to bear this in mind and see that no moisture is on the surfaces of the lens before beginning to operate the lamp.

If the above directions are followed a minimum of breakage will be the result; but no matter how careful you are you will break a condenser lens occasionally and it is always best to have a pair of them on hand.

* * *

SELLING SCENARIOS.

Will you please tell me where the plots are sold that make up the moving pictures? You do not give any addresses in The Nickelodeon. Please oblige me by sending a list of names. —E. M.

PRACTICALLY all of the manufacturers of motion pictures buy plots for scenarios for such pictures in the open market. The remuneration of the writer varies from ten to a hundred dollars for each scenario. It must be confessed, however, that the hundred-dollar stories are few and far between. Perhaps twenty dollars would be a good average. Those who are inexperienced in short story writing will see an advantage in the fact that they may find a market for even the barest outline of a plot that is suitable for motion pictures. It is true, however, that a properly arranged scenario ready to go direct to the producer with very little editing, receives a higher rate of pay than does the mere plot. The preparation of such scenarios in proper form, of course, requires some technical knowledge of the methods of procedure used by motion picture producers. In The Nickelodeon for December, 1909, we published an article describing the requirements of the motion playwright and giving a good sample scenario for guidance. We expect to print other articles of this nature before long, and in the meantime if you have any scenarios for a plot which you wish to offer for sale it will be perfectly safe to submit them to any of the motion picture manufacturers who advertise in The Nickelodeon.

* * *

SPECIAL SCREEN PREPARATIONS.

Although myself and several other exhibitors in Detroit have experimented with several different paint preparations for a picture sheet we have not yet acquired a satisfactory one. Will you be so good as to publish or write me giving the formula of what you consider the best preparation for coating a sheet to produce the best results?—P. B. B.

THERE are on the market a number of special screens and special preparations for coating ordinary screens, all of which claim to be the last word in the projection of a good, clear picture. Some of these preparations are merely a sort of calcimine for coating a muslin screen so that it reflects all of the light, instead of transmitting some of it, while others are of special manufacture, even going so far as to employ metal or mirror backs. Practically all of these methods and preparations have some value and really improve the picture. The great objection to the white muslin sheet is that half of the light goes through it and so is lost to the audience. This may be verified by looking at the back of the screen, when the picture will be seen to be quite as light as it is on the front of the screen. For practical results, however, it is hardly possible to improve upon the white plaster wall. Such a wall, finished smooth and pure white, reflects practically all the light and certainly can transmit none of it. Some declare that a slight violet tint improves even this screen, but that is somewhat in doubt. Practically all of the screen preparations which are on the market are secret formulas or patent concoctions, and unless you care to invest in some of them we think you cannot improve on the white plaster screen. If you try it and do not find it satisfactory we shall be glad to try to assist you further.

Pictures for Elgin Hospital

Moving pictures are to be shown at the Elgin (Ill.) state hospital to assist in the cure of the insane and to offer pleasant diversion to the incurable. Announcement that a moving picture machine would be purchased by the hospital as a gift to the patients was made by Dr. Sidney D. Wilgus, superintendent.

"Moving pictures will help us materially in curing patients," stated Dr. Wilgus. "They will take the minds of the patients from their misfortunes and like any other harmless diversion will stimulate the brain.

"It must not be overlooked that the pictures will also offer diversion to the incurably insane. The pictures will be shown at intervals of about once a week and will give the patients something to look forward to.

"All of the views shown at the hospital will be carefully censored. Of course, it would never do to show pictures of murder, suicide and other forms of criminal violence. The right kind of pictures will be a great help to us as well as a wholesome amusement for the patients."

It is the plan of Superintendent Wilgus to place the state hospital on a circuit with the down-town theater so that the latest films can be secured. This will give the hospital officials a chance to see the pictures at theaters in Elgin before they are taken to the asylum.

New Theater for Reading

At 819-21 Penn street, Reading, Penn., Ben Zerr has opened the Crescent, Reading's newest motion picture theater, which is meeting with great success in the presentation of the highest class films.

The Crescent is a beauty, has a seating capacity of about 800, is decorated very prettily, a feature being a dozen figures of statuary lining either side of the auditorium; attractive musical arrangements in charge of Professor Smink, a prominent Philadelphia musician; two fine picture projecting machines, wide aisles, splendid ventilation and light, two wide exits in the rear, a dressing room for ladies, in charge of a matron, etc.

The pictures shown are thrown upon a massive screen, which is really the wall of the house, 14 by 18 feet in size.

Shows are given every afternoon and evening. Mr. Zerr, who has had wide experience in this work, is giving his personal attention to the management of the house, which he represents, introducing many of the latest improvements in the motion picture business.

Mr. Zerr is receiving many compliments upon the appointments of the Crescent, which he hopes to improve from time to time. He states that many of the improvements planned are the result of suggestions from patrons, which he always invites.

Little Stories of Great Films

By H. Kent Webster

IT IS announced by the Essanay Company that it will release at an early date one of the most remarkable dramatic subjects it has ever made, a masterpiece in all features—story—acting—photography. It will appear under the tile of "A Sin Unpardonable."

The subject is not a feature as a gigantic production, nor is it a spectacular film. Its worth is chiefly in the excellence of the acting, the fine, clear photography, the deepness of its heart interest, and the general management and mounting of the scenes.

The atmosphere of the play is picturesque with a background of the Canadian wilds, the land of the lumberjack and the fur hunter. In costuming it is absolutely correct to all traditions.

The feature of the play is the conflict between the two principal characters, Jim Scott and Joe Taylor, unarmed, fighting with only the weapons nature gave them. This fight is tremendously dramatic and as realistic an encounter of this nature as was ever produced.

The story, though comparatively simple, is great in the emotions it will arouse. Briefly, it is as follows:

In a rough log hut in a clearing in the big woods lives Jim Scott, a young lumberman, with his wife, Martha, and his two children. Their dwelling place is rough and their conveniences few, but nevertheless it is home, and they are happy. Well fitted by nature for life in a country where existence is an almost continual struggle, Jim is slowly progressing in his efforts to build up a future for his little family. Jim, like others whose lots are cast in isolated places, longs for the society of his kind. When he finds an old friend working in a neighboring lumber camp in the person of Joe Taylor, he is delighted. Nothing will do but that Joe must go home to supper with Jim. Nothing loth, Joe accepts the proffered hospitality and the two strike out through the woods towards Jim's little clearing.

Joe Eats Supper with Jim's Family.

It becomes apparent at this juncture that Joe is not the sort of friend that Jim's heart is hankering for. While Jim is outside tending to the chores around the place Joe is obviously attracted by the comeliness of Martha, Jim's wife. He even goes so far as to offer her his love, but is repulsed by Martha, who reminds him that Jim is his friend. Just then Jim returns and the family gather about the humble board for their evening meal.

The lumber camp where Joe works is not so far away but that he makes it a point to pass Jim's cabin the next morning. He sees to it, too, that the hour is late enough for Jim to have gone to his work. He stops at the little cabin and asks Martha for a drink of water. When she returns with the cup he cannot resist the temptation of her beauty and clasps her forcefully in his arms. With that egotism so common to some men he cannot conceive that his offer should be refused; but Martha, true woman that she is, takes his advances as an insult and begs him to be on his way.

Jim, Magnanimous in His Victory, Forgives Joe.

A good woman can not but dread the effect upon her husband of a revelation of this sort. Nevertheless, Martha feels it her duty to tell Jim the circumstances, and she does when he comes home that night. Rendered furious by the duplicity of his supposed friend, Jim angrily shakes off the detaining hand of his wife and rushes out into the night, with a hot determination to slay the man who has so imposed upon his friendship.

The terrible fight between these two elemental men in the depths of the primeval forest is beyond mere word description, but is depicted on the screen in all its terrible intensity. When it is over Jim goes his way, leaving Joe apparently dead in the woods. In his home, suffering all the fears of the manslayer, he prepares to flee from home. As he opens the door he is confronted by the battered remnant of humanity he had known as Joe, who has recovered sufficiently to drag himself to Jim's door and to take upon himself the blame for all that had transpired. Magnanimous in his victory and moved by the pleadings of his wife, Jim finally extends a hand of forgiveness to his battered one-time friend, and Joe passes out of their little world forever.

In the Morse School at Pittsburg recently Professor C. E. Connolley, dean of the School of Apprentices and Journeymen at the Carnegie Technical Schools, delivered a lecture on motion pictures in the public schools to illustrate geography, history and other subjects.

Recent Films Reviewed

A Child's Plea.—Gaumont. Here we get a touch of high life with a duchess in the picture and a family of aristocrats. The old lady thoroughly looked the part and played it admirably. Her daughter-in-law, it is to be presumed, was a plebeian, for though of handsome appearance, she behaved very rudely and unkindly toward her titled mother. Probably the son had made a *mesalliance*. There is a child who brings the estranged members of the family together on Christmas eve in the accustomed manner. This reconciliation scene was poorly managed, the child facing the camera while she joined the hands of two people who stood behind her. The tableau effort was too obvious. It cannot be said that the drama is as touching as it aimed to be; there is too much artifice and too little real feeling. The settings are of great richness, well comporting with the rank and wealth of the persons concerned. It is a typical Gaumont production.

The Hills of Corsica.—Gaumont. There is something lonely and weird about the hills of Corsica if these pictures speak true. The sun seems far away as if shut out by curtains of mist, and the land juts rugged and bare out of the sea. There is plenty of fertility higher up, but the trees stand as single and silent as tombstones. Perhaps this dim unearthly appearance is due to the film tint, which is quite deep, giving a moonlight effect. They are dreamlike pictures, very beautiful.

Land of Monkeys.—Pathé. An interesting scenic, showing some odd nooks and crannies of India. The pictures are colored, which gives them a pleasing appearance, but it seems as if the subject was one that did not demand color especially. We have seen other Pathé scenics uncolored, which would have taken color to better advantage. But color, of course, is always welcome.

Art and the Legacy.—Lubin. An ingenious comedy, full of merriment and pleasing sentiment. Secret generosity always forms a pretty subject, here especially, because it is a mutual affair, and the discovery proves doubly delightful. The paintings are truly awful and it is small wonder that the fellow artists could not bring themselves to admire each other's work. They admired each other immensely, but had no delusions about each other's art ability. This is a true and humorous touch. The finalé is a trifle rough and boisterous, but is not, we suppose, out of harmony with the characters and their Bohemian proclivities.

Water Lilies.—Vitagraph. A film with many features of grace and charm. The dances form a novel diversion. The landscape settings are of unusual beauty. The actors deliver their parts with skill and refinement. The drama is sweetly sentimental, but avoids pitfalls of the mushy and saccharine. The main incident, where the hero goes blind, lacks conviction, being weakly executed. No stage trickery could have made it convincing anyhow, because it seems to be inherently impossible,—on the whole a very weak dramatic expedient. The scene that follows could have been worked up better, the hero's self-sacrificing motive not being very well conveyed to the audience. This is a very pathetic situation and it seems queer that the producer did not make more of it; the actors show sufficient strong feeling, but something vital is lacking; the scene does not achieve its full effect. In spite of these weak spots right in the heart of the drama the film pleases with its qualities of charm and refinement.

Evils of Betting.—Pathé. Betting on horse races is certainly a serious evil when one steals the money to do it with. But we should say the evil lay more in the stealing than in the betting. It is scarcely just to the betting system, no matter how reprehensible the system may be, to blame it for evils for which it is not responsible. But the film would have us do that. It is not a very effective subject because no character wins our sympathy. The felonious hero is a gentleman, but of weak character, and the mother and daughter are vaguely sketched. The only scene that works up any suspense is the scene of the theft where the urchin spies upon the hero's operations. The horse race was not handled in a manner to stir excitement. There was a chance at the end to make a strong scene by allowing the hero to repent of his misdeed and come to the mother with a confession and offer to make amends; but instead he tried to bluff it out, and sank to the depths of ignominy. As the hero was a gentleman apparently of good repute, it seems as if he ought to have been given a chance to redeem himself. The production is quite adequate with some pretty house exteriors, and the photography is clear and luminous.

The Link That Held.—Edison. A strong little family drama, realistic, convincing and pointing a good moral. The wife is undoubtedly a very common type and it is to be hoped that all such will find an equally satisfactory solution of their problem. This photoplay will reach many such wives in the course of its run and ought to have a helpful and wholesome effect. The play has been handled with the utmost realism, without any attempt to spruce up the actors or cast an idealistic glamor upon any element of the action. The effect is as real as a page torn from the book of life. This does not mean that the legitimate expedients of dramatic technique have been cast aside; far from it, for many deft touches are noted throughout the play. An effective example is to be observed in the means by which the wife's change of heart is rendered objective and visual, the change in her habits and the altered appearance of her home. Her reformation is translated into action and thus made vivid to the audience. All the parts are capably acted, especially the child, who is just a sweet, simple little girl without any uncanny precocity.

Shadows of the Past.—Selig. A strong subject based on burning emotions with several tense episodes. It is all plausible but the main incident, which seems a trifle forced and providential. The daughter obviously was sent out in the boat alone in order that she might tip over and bring her mother's bygone lover to the rescue. Suppose he hadn't been looking, though, and somebody else had rescued the girl? Then there would have been no ending to the drama. It all hangs on a coincidence, and in this case a too palpable one. The final scene discloses a strong situation, though at first a rather bewildering one, because the various motives and emotions are not all at once clear. Comprehension finally dawns, however, and the scene closes with impressive effect. It is the early scenes that impart the greatest measure of satisfaction. In them is disclosed a tense little drama of faithless love and broken troth enacted with much skill and force by the three concerned. The Florida backgrounds add beauty and interest to the pictures.

Will It Ever Come to This?—Lubin. We don't think it ever will, but then it might; so the film must be rated as something higher than farce, because it deals with a real problem. It is a case of exaggerated suffragetism, very, very funny. It seems to be the quintessence of the ludicrous and ought to bring an avalanche of laughter; but strange to say it doesn't. Only the last two scenes brought any demonstrations of mirth, and here it was a lady-like youth, who came in for the sport. In the other scenes where the new woman was predominant, no laughs were in evidence, though the action was equally extravagant and ridiculous. How to account for this strange silence? The fault does not lie with the film for it presents its subject with excellent effect. Is it that men, of whom 90 per cent of the audience was composed, have such a strong antipathy to the masculine woman that not even humor can dissolve it? Is man so hard pressed by the new enemy that he dare not relax even long enough to smile? The explanation is hard to find, but it evidently lies somewhere among the mysteries of sex.

Max Is Almost Married.—Pathé. Max is not as funny as usual in this film bcause he doesn't have a very good chance. He is outshown by three dog actors who carry off the honors of the performance. They are three star dogs who act with great precision and apparent intelligence. They give Max a hot and merry chase and finally get his goat. There is a rather silly picture at the end where the heiress bestows caresses on one of her pets. The dog appeared not to like it.

So Near, But Not Quite.—Pathé. A rough-and-tumble comic, bespeaking a large degree of acrobatic daring on the part of the actors. There is enough wit in the situation to make it amusing, and the piece is good for much explosive laughter.

His Trust.—Biograph. A really wonderful film. A large historical subject has been presented in a manner which no other

form of narrative art could hope to equal for vividness and realism. The stage could never do it, and the novel even less. The departure of the soldiers for the front, the battle, and the burning of the home are remarkable scenes which reveal the wonderful potentialities of the motion picture. The material aspect of the film is wonderful and the dramatic suggestion no less. The film epitomizes in a small scope all the tragedy and catastrophe of the Civil War as viewed from the southern standpoint. We have never seen the elements of that great tragedy more skilfully blended, nor the pathos of it more poignantly presented. It is a film of large value and ought to be preserved as an historical document.

Tag Day at Silver Gulch.—Lubin. When the clergyman took off his coat and biffed the town bully with such good effect, the audience broke out clapping. This is a very unusual happening in Chicago, at least within the loop district, and shows that the sympathy and admiration of the audience was thoroughly aroused. It isn't often that we see right backed so effectively by might all in one person, as in this clergyman, and the sight is truly thrilling. It may not seem plausible in retrospect, but happily no doubts assail one at the time. It is a good little drama, well put together and well acted, and deserves the applause that it brought forth.

Saved by Her Prayers.—Pathé. A bit of pietistic drivel beautifully presented. A girl prays for her lover who is out in a stormy sea, whereupon an angel appears and guides the boat miraculously to shore. There is no denying the sheer pictorial beauty of the scene where the little fishing yawl glides swiftly along through the water without any physical propulsion, and the angel stands in the stern with the fisherman gazing up at him in awe and rapture; but the sentiment and religious assumption of the scene is hard to swallow.

Marguerite's Birthday.—Pathé. An amusing comedy, well contrived and executed. The opening scene between the two balconies is ingenious as it stamps clearly in mind the fact that the two families are neighbors, one above the other; it also lays the foundation of the artist-husband's subsequent suspicions in regard to his wife and the wealthy broker down below. The involutions of the plot are decidedly French in their cleverness. No other nation can build plots with such nice dove-tailed joints and skillful artifice. The acting is sprightly and the episodes move on well-oiled bearings.

Coward or Hero.—Vitagraph. Some men are cowards on small occasions and heroes on great occasions. That appears to be the moral of the tale. In spite of its sensational and wonderfully realistic mine accident the piece fails to stir many thrills. We don't care much about the characters so their plight does not disturb us to any very exciting extent. Much of our indifference is caused by the poor acting. We never could sympathize with such stiff self-conscious people. It is a long time since a Vitagraph subject has disclosed acting that departed so far from the standard of competence set by that company. The producer seemed not over-inspired either. The scenes moved heavily and with reluctance. The flower-on-the-cliff episode showed poor management. The situation was not clearly conveyed to the audience; the setting was ill-chosen, no cliff or flower being in sight; and the actors made such a serious ado over a little matter. The whole piece is too obviously arranged for the final incident; the meaning of the preliminary scenes is too baldly stated. More artifice should have been employed. An audience always resents over-emphasis, as implying a derogatory estimate of their intelligence.

The Owner of the L. L. Ranch.—Melies. There is nothing to distinguish this film one way or the other. It seems to be a routine product, turned out in the course of the monthly round, adequate in most respects, but not very inspiring or vital. The situation of a foreign nobleman in an environment of cowboys has been handled many times before and generally with better effect. The miscarriage here is due to a mixed portrayal of the nobleman, who is handled in a manner half serious and half burlesque, and the effect is neither downright funny nor downright impressive. A mixed portrayal like this always has a weak effect because confusing to the audience. The pleasantest memory recorded by the film is that imparted by the leading actress who delivered her role as usual in a capable and straightforward manner. The photography might be improved, but is not very far from the Melies standard.

The Sophomore's Romance.—Essanay. This photoplay stirs interest with its many touches of actuality and local color, certain phases of college and theatrical life receiving circumstantial presentment. The opera house scenes, the "frat" house scene, the depot scene, all bear convincing evidence of reality, both as to settings and dramatis personae. The story disclosed is an interesting one, and points out to girls a new way of getting a husband.

The Italian Barber.—Biograph. Here we see several character types that are fairly new to the photoplay—a romantic newsgirl, a barber of Italian extraction and temperament, and a couple of music hall artists. This quartette gets into a romantic imbroglio that is quite unconventional. For a while matters look rather serious owing to the pathetic plight of the romantic newsgirl; indeed she holds a pistol to her head determined upon suicide; but tragedy is averted at the crucial moment and the play ends as farce. It is doubtful if a quicker emotional transition was ever accomplished in a photoplay. One moment the girl was bent on suicide because her lover had jilted her, and not three jiffies later she was departing for a ball with another fellow. The episode pulls through without a hitch, however, and that it did not appear absurd bespeaks adroit manipulation on the part of actors and producer. The final scene showing a bowery ball is rich in caricature and induced many laughs.

Pictures in China

Martin M. Walker, of Hong Kong, China, is interested in moving pictures in China. He has been in New York several days on business.

"The moving picture business has developed wonderfully in China in the past five years," he says. "Interest in the pictures has become widespread and all the larger cities have moving picture theaters. They are rapidly becoming one of the chief sources of amusement in the Orient.

"When moving pictures were first introduced in China, the Celestials considered them uncanny. I was in the importing business in Hong Kong at the time. For about a year after the first moving picture theater was opened it was supported mainly by foreigners, such as Americans, English people and natives of Australia, Germany and France. The Chinese, it seemed, couldn't understand the pictures; therefore they kept away from them. Once in a while a Chinaman would visit the theater. After that he was regarded as a very foolhardy fellow by his countrymen.

"One day, however, some American navy men induced a prince of the royal blood to accompany them to the theater. He enjoyed the show—timidly at first—but finally enthusiastically. When it was over the operator explained the secret of the pictures to him and he became a devotee of the house amusement. When the other Chinese saw that the prince attended the shows and always escaped with his life, they began, gradually at first, to follow suit. In a few months the theater was playing to crowded houses of Chinamen every day.

"It was then that I saw an opportunity to make some money with moving pictures and I opened four houses in Hong Kong. Now I have six and am improving the service all the time.

"One queer thing about the Chinese, so far as moving pictures are concerned, lies in the fact that they do not seem to care for comedy. They want serious things. Tragedies are the most liked. Last year we organized a company of Chinese actors to play before the camera. The Celestials like Chinese skits very much, but they seem to appreciate films made with white actors, too."

Of Interest to the Trade

By L. F. Cook

New York Letter

LAST Tuesday night your correspondent was looking over the amusement advertisements in the New York *Evening Globe,* trying to decide at which theater he would be most likely to get the most for his money. While thus engaged, he discovered at last a regular group of picture show advertisements. Eureka! at last the long desired had come true. Moving picture theater advertisements, grouped together, like a regular business, and to tell people where to go to see good pictures!

This little group of advertisements certainly did look good. It was a long time ago that THE NICKELODEON commenced to advise the exhibitors to advertise in the daily papers. In an effort to promote just such advertising, we have from time to time published articles on advertising the show, and while it may be that this has been a feature of New York picturedom for some time, it is the first time we have noticed it—not being a regular reader of the *Globe;* and we can't let it slip by without notice. The find cheers us up a bit, and we wish to compliment the theaters who are doing the advertising, not only for their effort to create business, but for the good that this kind of advertising will bring to the business at large. More of this sort of thing would help wonderfully, and we wonder if there are not a few more daring souls among the New York exhibitors who will patronize this advertising column.

MOVING PICTURES.

Manhattan.

PASTIME THEATRE 111TH ST. AND FIFTH AVE. ALL UP-TO-THE-MINUTE PICTURES. ALWAYS SOMETHING NEW. 5 BIG ACTS. MATINEE 5 CTS., EVEN'GS 10 CTS. OPEN 1 TO 11.30.

YORKVILLE CASINO No. 210-212-214 E. 86th St. Showing all subjects produced by the leading American and European manufactions, subject to official censorship. Pictures change daily. High class vocalists.

ODEON THEATRES, 145th St., near 8th Ave. Clinton St., bet. Rivington and Stanton. The Best in Vaudeville. Perfection Motion Pictures. Mats., 5c. & 10c.; Evs., 10c. & 15c.

WASHINGTON THEATRE 557 W. 145th St. A refined motion picture theatre, showing the latest and most exclusive views. Mats. 5c.; Eves., 10c. and 20c.

NEW FAMILY THEATRE 551 8th Av. Special vaudeville acts with attractive pictures.

PIONEER THEATRE 553 8th Av. Watch for our feature act. Latest pictures always showing.

ACME THEATRE 289 8th Av., Bet. 24th and 25th Sts. Latest Motion Pictures, Illus. Songs. 2 to 11 P. M.

VARIETY THEATRE 407 6th Av. Latest motion pictures. Continuous playing. Adm. 5c., 9 AM to 11 PM

REGAL THEATRE 3d Av. & 112th St., latest pictures changed daily; refined vaudeville. Adm. 5c. 1 to 11.30 P. M.

CENTRAL THEATRE 110th & 8th Ave. Latest American & European productions. Extra long matinees.

PARK WEST THEATRE 99th & Col. Ave. Largest vaud.& picture house on upper W. Side. 500 good seats

AUDITORIUM 125th & Lenox Ave. The biggest little house in New York. High class vaudeville and pictures.

THE APOLLO THEATRE, 304 8th Ave., next door to Miner's. Polite Vaudeville, Pictures, 1 till 11 P.M. 5c.

Brooklyn.

HIPPODROME 5th Ave. & Union, B'klyn. Motion pictures. Clean and wholesome. A place for the family.

MYSTIC THEATRE 3d Av. & 51st, B'klyn. Clever Vaudeville & latest Motion Pictures. Mats., 5c.; Evs., 10c.

CHELSEA THEATRE 40 Flatbush Av., B'lyn. Motion Pictures. Latest Picture Ballads. Let Us Get Acquainted.

Picture Theater "Ads" in the New York *Globe.*

Speaking of advertising, this column is going to give a little free advertising, entirely unsolicited, to Kinemacolor. A few days ago we went into the Eden Musee to see Kinemacolor, and while it is extremely hard to find words to express our feelings, we came away greatly and seriously impressed.

It may be that we took to the exhibition a taste jaded by too much black and white pictures, but the change was delightfully welcome. With the consent of the gentle, as well as otherwise, readers we would like to say a few things about Kinemacolor.

The first impression was not very attractive. The pictures are taken at the rate of thirty-two per second, and being projected at that rate seem strange to the eye accustomed to the slower speed. The first picture was a farming scene, showing plowing and later harvesting. Naturally this did not offer a very great contrast in color and while it was an excellent picture, it was not Kinemacolor at its best—but wait—look at that horse. The horse himself was a most beautiful animal, and one could not only see the beautiful chestnut brown in his coat, but could actually see the sheen as it was reflected from his smooth flanks. The farm hands, mostly, wore a bit of color, a gaudy hat-band, a red handkerchief, or a brilliant colored sash, worn probably for the benefit of the camera, and these were faithfully presented on the screen.

This ended the film; and while waiting for the next, we went and examined the projector, which may be described later.

The next reel of Kinemacolor comprised two subjects, the canals of Venice, and a scene at an English (probably) bathing beach.

The views of Venice were most excellent, but because this is written for experts, we will not attempt to describe the whole scene. While watching this film, there suddenly appeared on the screen a vivid patch of blue. It was very clear, and in almost the twinkling of an eye, it was gone. The blue was part of a woman's hat that had passed near to the camera, but the effect was very startling, and while very short in duration, showed the possibilities of color photography, in motography.

One of the most notable releases of the near future will probably be that of Pathé Frères, entitled "Il Trovatore." This film is notable, not only on account of its excellent acting and beautiful coloring, alone, but on account of the efforts the manufacturer has made in preparing music to accompany it. Another film which bids fair to be excellent is Thanhouser's "The Old Curiosity Shop." Of course nothing needs be said of the popularity or worth of Dickens' stories, and it would seem as if Thanhouser had made an excellent selection in this subject. The most interesting of Edison's coming releases appears to be that entitled, "With Interest to Date." This film is a comedy drama, the story of which was written by Rex Beach, and appears to have a more than usually interesting plot.

On Tuesday evening, January 10th, Mr. Freise-Green gave an exhibition and lecture on moving pictures in the rooms of the American Institute. Mr. Freise-Green's lecture was on motography of the past and of the future. The lecture was illustrated by colored pictures, taken by the Freise-Green process, as well as the old reliable black and white pictures, and proved very interesting.

The employees of the Sales Company are busy preparing for their first annual reception on February 3. This ball is a very important as well as festive occasion, is receiving the hearty support of all the independent interests in New York, and bids fair to be a most notable success.

Ray Grumbacher, of the Pacific Film Exchange, Seattle, Wash., and Mr. George H. Grumbacher, of the Spokane Film Exchange, Spokane, Wash., arrived in New York this week. They hobnobbed with all the independent manufacturers, talked a little business, had as much of a good time as the weather would permit, and left determined to return to New York as soon as possible.

Kurt Waldemar Linn., Chicago manager of Pathé Frères butted into New York this week, stopped a minute or two and hustled back to Chicago. Like the busy bee he is, he walked right in and turned around and walked right out again. We hope he will come to New York more often in the future.

Mr. Doherty, of The Biograph, who has more trouble with advertising men than with any other part of his job, went west for a most needed rest.

The holding of moving picture exhibitions in darkened auditoriums was brought up at the first session of the Buffalo, N. Y., board of aldermen of 1911 in a resolution offered by President Harris requesting the mayor to refuse licenses to such places without first inquiring whether they can be equipped so as to get along without the turning down of light. The resolution was adopted.

Vitagraph Notes

"The Deluge," or the destruction of the world by a flood, is a Vitagraph Biblical subject giving the most complete idea of the building of the ark and the preservation of Noah and his family, portraying events that led to the deluge and consequent happenings. The vastness of the production can readily be appreciated when we see the great numbers of animals entering the ark, the destruction of the city by water, the descending torrents and the immense amount of the prehistoric detail astounds and appalls our most vivid imagination. Tuesday, February 7, will bring this great offering..

Mr. A. E. Smith of the Vitagraph Company will start on his homeward journey from Paris this week, arriving here about February first.

A most novel advertising scheme used by one exhibitor is a picture of the Vitagraph stars who appear in the life portrayals with a small piece of film attached to the card. This novelty was presented as a souvenir to the patrons of the Spencer, Indiana, Majestic theater.

"The Tale of Two Cities" is to be released February 21, 24 and 25. This means a drama in three reels, comprising Charles Dickens' great story of the French revolution of 1789 and the greatest exhibition of filial and fraternal love known to all history.

Pathes Chicago Offices to Close

About the first of March the Chicago office of Pathé Frères, at 35 Randolph street, will be closed The popular Chicago manager, Kurt Waldemar Linn., has been appointed special representative of the company, working from New York. Mr. Linn's Chicago friends will deeply regret his removal from their midst.

Synopses of Current Films

Edison

AN EVENTFUL EVENING.

It is no easy matter for a girl to deliberately face three hardened burglars of the worst type and to calmly contrive to hold them in the house until their captors arrive. Neither does she use the method of "at the pistol point" to do it, but depends upon her helplessness and womanly ways to hold them in the room until help arrives. When "Miss Civilization," the title that Mr. Davis has bestowed upon this young lady, discovers that the burglars are about to enter the house, she steals downstairs to the telephone and 'phones to the station agent of the Railroad of which her father is president, and orders out a special engine and wrecking crew to come to her aid. Then she succeeds in a very effective and feminine manner in detaining the burglars. This scene is both dramatic and natural and holds the audience spellbound, as it is intermingled from time to time with views of the engine and the wrecking crew tearing down the track at sixty miles an hour. At last three long blasts from the steam engine give her warning that the house is surrounded by men. In the next instant she is in the arms of her father, while the dumfounded burglars are confronted by a crowd of bluecoats and the dirt begrimed men of the roundhouse.—Released January 24.

THE LOVER AND THE COUNT.

An extremely persistent young American, who is passionately in love, in attempting to pay court to his sweetheart is placed in many distressing circumstances by her very ambitious and domineering old mother. The young lady's father, a submissive old gentleman, is in sympathy with the young American, but because of the mother's decided preference for the Count as her daughter's suitor he dares not offer any suggestion that may be construed as detrimental to the Count's courtship. The lover and his sweetheart make many attempts to see each other, but each time they are detected and their plans are thwarted. The maid, because of her persistence in assisting the young lady and her lover, is discharged. The mother then advertises for another maid, and the lover seeing the advertisement in the paper, costumes himself as such. Then, with his chum ensconced in a newly acquired wicker trunk, he makes his way to his sweetheart's home, where he is given the desired position of maid. Losing no time in executing his plans, he discloses his identity to his sweetheart, who immediately expresses her approbation. She is put in the wicker trunk and the lover, simulating drunkenness, creates a disturbance which causes his dismissal. As soon as the lover and the trunk containing his sweetheart are in the hall the chum, who has secreted himself behind the screen, locks the family in the room. The lover and his sweetheart repair to the floor below where they meet the minister whom the Count had caused to be present for his own marriage, and realizing that they need go no further, they are married on the spot. The Count, the mother and the father appear on the scene just as the marriage ceremony is completed; the Count and the mother are so chagrined and crestfallen that they leave the room in disgust; the father remains behind rejoicing over the lovers' triumph.—995 feet. Released January 25.

THE BLACK BORDERED LETTER.

We are introduced in the opening scene to Miss Mabel Renshaw just prior to her leaving for a visit to her aunt. Here we are also shown her fiance, and at once become interested when we discover that he is deeply in love with her sister Alice. This fact does not seem to greatly disturb Miss Renshaw and she proceeds on her visit to her aunt. This is the last we see of Miss Mabel Renshaw, who is an heiress and into whose possession upon her marriage day will fall a considerable amount of wealth. As in all detective stories, we are next confronted with the announcement that Miss Renshaw has suddenly disappeared. No trace can be found of her despite the fact that she is being searched for on at least two continents. Of course the family is greatly upset and as a last resort they go to the famous detective, Griffith Grafton. But before calling upon him they receive a letter from the missing girl, the border of which is draped in black, the mourning paper being used on account of her father's death, which left her the great heiress. Calling upon Mr. Grafton, the mother and Mabel's sister, Alice, lay the case before him, showing him the black bordered letter, which contains the mere statement that she has found the man whom she loves and is happy and that they should not search for her. Not content with this they place the case in Mr. Grafton's hands. It is with a keen eye and his knowledge of the world in general that he at once detects a peculiar odor about the paper. Unknown to either of the ladies, he discovers upon the inside page of the letter invisible writing which is brought to view by the extreme heat of the fire. The contents of this letter discloses the fact that the missing heiress, Miss Renshaw, is in great trouble, even to the extent of being in fear of death; and in it she pleads pathetically for help. The detective keeps this to himself and proceeds upon his investigation with the usual method of these mysterious men of the law. He soon discovers the secret marriage of Miss Alice Renshaw to Mr. Scott, the fiance of the missing girl, and forces her to confess to it. This adds new light to the case, as from all appearances it looks as though Mr. Scott had deliberately taken means to do away with his wife's sister. Not convinced of this, Mr. Grafton finally discovers another and a stronger motive for her disappearance, and he at once proceeds to put his theory into practice. We are next introduced to a sanitarium where we are shown Griffith Grafton, who only a few hours before was a strong, healthy man, but is now a weak, miserable man filled with various ills and making application at the sanitarium with the assistance of a medicl friend. We are not kept long in ignorance of the fact that this sanitarium is not only a hospital for various diseases, but is also a private insane asylum in which people are confined by force. Nor does it take us long to discover the motive for Grafton's application in this sanitarium, for he soon finds the missing heiress there, held against her will. The method in which he succeeds in liberating her from this institution is worthy of the keen methods of this famous detective. Her escape is thrillingly shown, and we are next introduced to a family conference

in which the mystery is cleared up and the hands of the guilty party bound with manacles, this person being no other than Dr. Clark, the respected trustee of the estate, who to cover up his defalcation of the fund had caused Miss Renshaw to be placed under restraint in his private sanitarium.—1,000 feet. Released January 27.

Essanay

HIS MASTER'S SON.

At the close of the Civil War, Colonel TenBroek, broken in health and fortune, determines to leave the land of the Lost Cause, and take his wife and four-year-old child, James, to Chicago. His negroes have all been freed by the northerner's victory, but one of them, Cyrus, the Colonel's personal servant, refuses to accept his freedom, and announces that he will follow the Colonel's fortunes wherever he may go. However, the old southerner is not destined to leave the land for whose principles he has fought, death intervening upon the day set for the departure. Cyrus, sure that he is indispensable to the widow and the boy, steadfastly refuses to desert them. Twenty-five years later, we find the Colonel's son a prosperous young Chicago business man. His mother has died and save for the devoted Cyrus, who delights in attending to his young master's wants, James is alone in the world. In the social life of the great city James meets and becomes enamored of Mable Ware, daughter of Frederick Ware, a prominent grain operator. The girl favors the young southerner's suit and accepts him, rejecting the advances of Justin Wood, a broker. Wood, smarting under his defeat, plans the ruin of his successful rival. His opportunity comes a few days later, when he discovers that James has taken a "flyer" in July wheat, speculating a little more heavily than is his custom. Gathering a small clique of speculators about him, Wood institutes a bear raid, smashes the market until Jame's entire fortune is swallowed up, and his brokers demand additional margin. James receives the margin call at his rooms, and having no more money, gives up the fight. As he sinks dejectedly into a chair, he drops the margin call to the floor, and it is picked up by the faithful negro, who wonders what can be the contents of this letter, which so troubles his young master. Unable to read, he seeks for a person whom he can trust to interpret the writing, and finally decides to ask his master's sweetheart. Taking the paper to her house he begs that she will read it to him, and she immediately comprehends the gravity of the situation, telling the negro that his master is facing ruin. Cyrus surprises her by telling her that his young master has been very generous to him, and that he has almost a thousand dollars saved, and asks her how he can use it to save his master. Telling the negro to take the money in his master's name to his broker's office, she tries to enlist the aid of her father, who, feeling that Wood has perhaps over-reached himself in

manipulating the market, places heavy buying orders for his own account and advises his friends to purchase July wheat. These heavy purchases rally the market and the negro's money having arrived in time, James is still in the game with a large profit to his credit. With the exception of Wood, all concerned are deeply grateful to Cyrus, as it was his attempt to help his master which has given Ware and his associates an opportunity for a splendid coup in the grain market, and Cyrus finds himself a favorite, not only with his master, but with the young lady, who will soon be his new mistress.—1,000 feet. Released January 17.

THE BORDER RANGER.

Dan Coughlin, a ranger, comes upon a band of smugglers and succeeds in capturing one of them, a half-breed Mexican, "Easy" Joe by name. Joe is taken to headquarters and locked up, while all efforts to wring a confession from him as to the whereabouts of the band's rendezvous having failed. It is not long, however, before the others of the gang make an effort to liberate their pal and send an Indian to spy upon Dan and other members of the troupe. Dan is in love with pretty Molly Parsons, a young woman of the village, the sole support of herself and little sister, a child of seven. "Cissy," the little one, while thoroughly in love with Dan herself, makes life a torment for the big "sis" and her beau by frustrating every attempt of Dan's to make a proposal until the big ranger takes the young lady into hand and locks her in another room long enough to make his proposal and obtain the fair lady's faint "yes." The Indian spy has followed Dan to Molly's home and through the window has seen the little love scene, after which he hurries away to the rendezvous of the smugglers and informs them of what has occurred. Jenkins, the leader of the gang, thinks for a while and finally confides to the others a plan by which they can obtain the release of "Easy" Joe. The plan is carried into effect when three of the ruffians kidnap Molly and carry her away to their shack, while the Indian is dispatched with a note, which he slips under the door of the ranger's quarters. The next morning Dan finds the note and in great anxiety mounts his horse and rides away to where he believes Molly is captive. His mission ends disastrously as the watchful smugglers also capture him and drag him away to their shack, where he is brought face to face with Molly to undergo the taunts and curses of the band. Dan, aware that his mission was to be a perilous one, has left a note for the captain, who, upon reading it, orders his men to saddle and dashes away on the trail of the captive ranger. In the meantime Molly, who has been under the eye of an old hag, has made her escape, and comes upon the rescue party, whom she directs to the smuggler's shack. Here they burst in upon the band, who, in their mad desire for revenge, have tortured poor Dan

until he has fallen under the lashes of the leaden whip. All the smugglers are captured and at the close of the photo-play there is a happy reunion between Dan and his sweetheart.—995 feet. Released January 21.

A SIN UNPARDONABLE.

The scene of the play is laid in the north woods of Canada, the land of the lumber-jack and the fur hunter. Young Jim Scott, a lumberman, his wife, Martha, and his two children, are happy in their home, even though it is a rough habitation, in a country where the struggle for existence is hard and trying. One evening Jim runs across an old friend in Joe Taylor, who is working at a nearby lumber camp and Jim, on his way home, hospitably invited his friend to his cabin for supper. Joe accepts and the two wend their way through the woods to Jim's home. When Joe is left alone with Martha and the children, while Jim is looking after duties outside, Joe makes love to his friend's wife, but is repulsed by her, who begs him to remember his friend. The scene is interrupted by Jim, who returns and the family seat themselves at the table. The next morning, after Jim has gone to work, Joe passes by Jim's cabin and begs Martha for a cup of water. The young woman brings it for him and after Joe has drank he seizes the woman in his arms, secure in his belief that he can win the woman he loves, now that her husband is not about. But Martha, smarting under insult, sends him away. That night when Jim learns of the state of affairs between his friend and his wife his rage is impotent and despite the pleading of his wife he seizes his axe and runs out into the night determined to kill the man who had proved so treacherous. The fight in the woods with their bare fists is the most realistic of anything ever produced and Jim leaves Joe apparently dead. An hour later the fear-stricken survivor of the combat, having arranged to flee from the country, opens the door to Joe, a battered broken wreck, who has gained consciousness and dragged himself to Jim's shack. Upon Martha's plea Jim accepts the apology of Joe, who murmurs his thanks and leaves the house forever.—1,000 feet. Released January 24.

THE TWO REFORMATIONS.

Young Frank McLain, a young Easterner, loses his position in the East and resolves to go West to prospect for gold. Arrangements are made that he leave his wife at home and send for her later as soon as he has found a position. Frank's prospecting proves a failure and he is without funds when his plight is made more severe by receiving a letter from Alice, his wife, stating that she, also, is out of money and is threatened with expulsion from their home by the landlord. It is at this moment of despair that an escaping bandit, one "Bad" White, as he is known, enters Frank's cabin, begging protection from the sheriff and posse who are in hot pursuit, promising Frank a bag of gold if he will secret him some place about the prospector's quarters. Frank hesitates but a moment and finding the temptation too strong to resist, yields. The sheriff enters and asks Frank if he has seen White and then leaves when Frank says he has not. Later Mrs. McLain receives money from her husband and decides to go West without notifying Frank. She arrives and takes the stage coach to Snaketown, a mining town, unaware that her husband and "Bad" White have made plans to hold up the very stage upon which she is a passenger. White, however, learns of her arrival in time to forestall the holdup and later when Frank and his wife meet the two resolve to give up the game of outlawry, happy at having escaped the disastrous end of Frank's romance, which would surely have occurred had the holdup happened.—Released January 28.

Lubin

FATHER MAKES HIMSELF USEFUL.

Fritz Grenshaw was an ideal husband and very much in love with his young wife, Irene. But his disposition was such that he did not show many of those little attentions and caresses which women love. After awhile Irene decided that she was a neglected wife. She wrote to her husband's father, complaining of Fritz's neglect. His father thought over the problem and then had a bright idea. He packed his grip and in due time arrived at the home of his son and daughter-in-law. There he told Irene of his scheme and she entered heartily into it. When Fritz came home he found his father very attentive to Irene. At first he took no notice of this, but father's attentions increased at an alarming rate. Finally Fritz remonstrated. Then he became angry, then suspicious, and at last very jealous. He told father right there in pretty strong language what he thought of his actions. Things were getting pretty serious when father and Irene revealed the whole scheme, with the result that Fritz and his wife "lived happily ever afterwards."—976 feet. Released January 23.

FATHER LOVE.

A young musician who had been hired to play the violin at a reception, saw and fell in love with Marion Hayes, the daughter of a millionaire. His love was returned and when her father tried to separate them, they decided to elope. About one year after their marriage, the mother died, leaving the father with a little girl-baby. Then the father became paralyzed. Though it cost him the keenest pang, he sent his child to her grandfather, preferring to tread the path of poverty alone. Sixteen years later the child, now a beautiful young girl, happened to be in a music store when an old and decrepit man came in to sell some of his compositions. They were rejected and the old man was leaving the store when the girl stopped him, bought his compositions herself and giving him her card, told him she would buy any that he might write in the future. The musician looked at the card, noticed the name, questioned the girl and found she was his own daughter. She was equally delighted to find the father she had never known and their delight was made complete when her grandfather gladly received her father into his home.—1,000 feet. Released January 26.

THE MAN IN 23.

Nestor

Mrs. Glendon, proprietress of Hotel Glendon, as business-like and sensible as she appeared, was still a woman and, therefore, curious. In vain Nell had protested with her for examining the Howards' things, but Mrs. Glendon, feeling confident that father and son would remain downstairs to play a game of cards, went smilingly forward in her tour of inspection, until Mr. Howard's step sounded in the hall. With a spring, Nell succeeded in getting into the closet which divided the Howards' rooms, and, slamming the door, left poor Mrs. Glendon to brave it out as best she could. But panic was in the air, so finding herself alone and all means of escape cut off, Mrs. Glendon hastily crouched behind a settee. Nell had intended making her escape through Bob Howard's room, but, as she looked through the key-hole, she beheld the young man comfortably smoking a cigar. So donning a coat and hat which she found in the closet, the girl waiffed until the old gentleman had turned out his light. Then, creeping softly out, she made a dash for the door and succeeded in gaining her own room unrecognized. Mrs. Glendon attempted to follow suit, but her exit was cut off by Mr. Howard springing from his bed and locking the door, so she was forced to retreat into the closet. From here, she might have later on adopted Nell's method of escape, had the girl not dropped a coat-hanger, in her haste, and sent Bob scurrying to the office to tell the boys of a

"burglar" in their closet. Armed with various weapons, the party crept cautiously up to Mr. Howard's room, where the recent commotion seemed to have taken place; but that gentleman absolutely refused to open the door until he was warned that they would break it down. This reluctance on Mr. Howard's part was entirely misconstrued, when Mrs. Glendon was taken from the closet in a fainting condition; and it was only his nimbleness of foot, which enabled him to keep ahead of his pursuers, as down the stairs and around the hotel they ran. At last he succeeded in dodging them, and again sped upstairs, only to mistake Nell's room for his own. It proved, however, to be Nell, who, seeing a man under the bed, fled downstairs and brought up the crowd. But no sooner had they dragged him out, than she recognized the old gentleman and hurriedly informed her mother that they must now make a clean breast of the matter. And, although somewhat uncomfortable for all concerned, it proved an excellent lesson for the proprietress. Nothing could again induce her to meddle with a guest's belongings.—Released January 25.

MARGUERITE'S BIRTHDAY.

Pathé

The twentieth of July is Marguerite Vandall's birthday, and she slyly writes the fact across the calendar, so that her husband, a young artist, may be reminded of it before the day is out. She places the almanac in a prominent position, and then goes out to do some shopping. Whilst she is gone, Arthur, her husband, finds the calendar, and anathematizing his forgetfulness, hastens out to buy some gift for his wife. During his absence, a burglar breaks into the flat below, and having appropriated a fair amount of valuables, is preparing to depart, when a step is heard. He at once makes every effort to get away unseen, and ultimately takes refuge in the Vandall's flat, where he hides himself in a small lumber room. In his hurry, however, he leaves a part of his booty on the table, so that Marguerite, on her return, finds a number of valuable jewels and other articles, which she presumes to be gifts from her husband, She is naturally delighted, but to her dismay Arthur, on his return, falls into a rage, and declares they must be presents from the tenant of the flat below, who has often regarded her with an indulgent eye. Gathering them up in his arms, the young man marches down the public stairway, and entering the flat beneath, finds himself in the presence of a family bitterly bemoaning the depredations of the burglar. Arthur's appearance, as he stands loaded with the stolen property, is suspicious, and he is given into custody. However, he insists that all shall ascend to his own flat to hear his wife's story. His suggestion is adopted, and Marguerite is just giving her version, when the scared burglar, in endeavoring to make his escape a second time, falls through the door of the lumber room. Everything is then explained, and with many mutual apologies, the Vandalls and their neighbors lay the foundation of a lasting friendship.—659 feet.

SAVED BY HER PRAYERS.

Before setting sail for a long voyage, a mariner plights his troth to his sweetheart before a shrine at the entrance to the church built amongst the sand dunes which fringe the coast. During his absence a heavy storm arises, and his sail and part of the rigging being carried away, his boat is tossed helplessly on the waves. He implores heavenly aid, and at the same moment, his sweetheart, divining that her lover is in peril, runs to the shrine among the dunes to pray there for his safety. Her appeal is heard, and an angel descends to earth to reassure her, then goes forth to quell the tempest, and with outstretched wings to guide the boat safely back to land, where the girl anxiously awaits its return.—331 feet. Released January 16.

TRAILED BY AN INDIAN.

Two of the ranch hands, proving troublesome and quarrelsome, they are paid off and dismissed by the ranch owner, Jack Crawley. Riding off, they come across Jack's little daughter, and tying a note to the collar of her pet dog, that Jack will never see his daughter again, they ride off with her. On the dog's return, the note is found, and an Indian volunteers to trail the cowboys and bring back the little girl. Some magnificent western country is seen as the Indian follows the two horsemen in a long pursuit. Ultimately, at the top of a hill, where they have halted, he manages to get at their horses and drives them away. One of the cowboys he then tackles in the middle of the lake, and manages to overcome him. The other takes the girl and it is not until his last cartridge has been expended, and the Indian has vanquished him in a hand-to-hand fight, that he finally gives in and allows the Indian to take the child and return her to her parents.—495 feet.

SEA BIRDS IN THEIR HAUNTS.

Amongst the scenes shown, which are all taken at close quarters, is a colony of guillemots packed so tightly that returning birds have to alight on the backs of their companions. Lesser black backed gulls, gannets, to obtain which the photographer descended 80 feet down a rope and dangled over a sheer precipice having a drop of 300 feet. Puffins, kittiwakes, wild ravens, Richardson's suka, Buzzard feeding its young, to take which the photographer waited for three days in a crouching position. Young kestrels and a reed warbler feeding a young cuckoo, complete the picture.—462 feet. Released January 18.

THE TABLES ARE TURNED.

Betty's mother has some shopping to do, and leaves her irrepressible daughter to the watchful care of her husband. Dad tells Betty to practice on the piano, whilst he occupies himself in his own special "den," a room adjoining that in which the madcap is sitting. Betty, however, is not particularly enthusiastic upon the delights of practicing, and finds playing with a ball far more exhilarating, the more so that her father's quick hearing necessitates some very strategic movements. Several times she is nearly caught, and at last her father, out of patience, pushes a long looking-glass into the corridor between the two rooms. In it Betty's every movement is reflected, and she is soon regretting upon her sins. Dad thereupon returns to his den with a smiling face, and soon after a pretty maid enters. Feeling rather dull, he chucks her under the chin, and follows up this amatory advance with a kiss, another, and yet another—the fourth is interrupted by Betty, who points exultantly at the mirror and demands as the price of her silence that her mother be not informed of her delinquencies.—981 feet. Released January 20.

THE MARKED DOLLAR.

Budd Right, the foreman at Colonel Bob's ranch, was sent in charge of the boys when they drove some 1,500 head of cattle to the packer's depot. When saying good-bye to his wife and little daughter, the latter gave him a marked dollar to buy her a teddy bear. Budd sold the cattle at a good price, but getting in bad company, had his wallet with the money in it stolen. On his return the Colonel had Budd arrested. Fortunately, however, his little girl, while out on the prairie, picked up a cowboy's hat that blew off and was rewarded by him with a dollar for so doing. She noticed this was the one she had marked for her dad. She quietly follows the two horsemen and ascertains where they have the contents of the wallet hidden in an old trunk. Waiting till they are gone away, she persuades the wife of one of them to return it. Taking the wallet to the Colonel, her story soon convinces him of Budd's innocence, and he is speedily restored to favor on his promising to give up his bad associates.—968 feet. Released January 21.

HIS BEST FRIEND.

Solax

Lord Kilgore, seated one day in his ancestral home with his "best friend" Betsy at his feet, is called upon by an attorney who shows him a copy of his uncle's will containing the remarkable provision that his entire fortune is left to Lord Kilgore provided he will immediately proceed to America and marry his cousin, Alice Wetstone, whom his lordship has never seen. Lord Kilgore, after mature deliberation, decides to comply with his uncle's wishes and departs with his four-footed friend Betsy for the United States. On the ship he meets Villiers, a New York crook, with whom he becomes friendly, and to whom he confides the purpose of his trip. Villiers conceives the idea of detaining Lord Kilgore and impersonating him at the home of the girl whom he is going to see. Bribing the wireless operator aboard the ship, he sends a message to his gang at New York to have one of their number disguised as a coachman, meet the vessel upon its arrival and prevent Lord Kilgore from sending a message to have his friends meet him. When the ship reaches New York, Villiers secures Lord Kilgore and, leaving him bound in a room at the headquarters of the gang, proceeds to the home of Alice, who has been anxiously awaiting Kilgore's arrival—Villiers,

however, reckoned without Lord Kilgore's trusty and best friend, his dog Betsy. The wonderful dog takes advantage of Villiers' absence from the room to give her master a pencil and paper upon which he scribbles a note, acquainting Alice of his plight. The dog, with human intelligence, then hides herself in one of Lord Kilgore's suit cases and delivers the note to Alice—having been carried there by the villain himself. The "best friend" then leads Alice and a rescuing party to the place where Kilgore is detained. His lordship is liberated, the villain arrested, and all ends happily.—Released January 27.

THREE MEN AND A MAID.

Vitagraph

Two brothers, jolly old bachelors, receive a letter from their cousin stating that he is dying and will leave his only child, Vivian, and her large inheritance to their guardianship and care. Recovering from their surprise they call the housekeeper and immediately begin preparations for her reception—buy all sorts of toys and comforts to make a child happy and welcome. They have in their employ a good-looking young fellow as their private secretary, in whom they place great confidence and, indeed, they have every reason to, for he is attentive to his business and theirs. Vivian is expected and her two guardians are very happy in their expectations of entertaining the child—one is beating a drum, the other working a sort of Jumping Jack, anticipating the pleasure of the little one when she sees the amusements. While thus engaged Vivian is announced, and when they get a glimpse of an attractive young lady instead of a child they are very much embarrassed and try to hide the cause of their confusion. They have to adapt themselves to new conditions, and Vivian is soon engaged in straightening up the house and giving it a thorough overhauling. She meets the private secretary; there is an immediate mutual admiration and it is not long before it becomes more pronounced between them, and the old gentlemen become suspicious and decide that the secretary must be discharged. This is the signal for Vivian to assert herself and she does it, convincing her guardians that she is well able to manage her own affairs. The secretary takes his dismissal to heart, is taken sick and reduced to want. The young ward goes to see him and she is followed by the two old fellows. They trace her to the clerk's lodging. When they see her and the young man together they haven't the heart to find fault; their feelings gradually subside and they succumb to the pleadings of their ward, give their blessing and re-engage the young fellow with an increase of salary.—Released January 17.

THE GIRL IN THE FILM.

Charlie, who is a camera fiend, goes out to the park to take a few snapshots for his collection of photographs. He scouts around and gets some "dandies." Tired out, he sits down on a bench in the warm sunlight and falls asleep. In this position he is seen by a couple of young ladies, "Nan" and her friend. The friend induces Nan to have her picture taken; softly they tip-toe up to the bench and remove the camera. Nan strikes a pose, her friend snaps the shutter and that is how she got in the film. The girls put the camera back on the bench and steal away. Charlie wakes up, takes a few more photographs and starts to the developing shop to have the films developed. In the course of a day or two he goes for the films and is very much surprised to see the strange face and figure of a young girl on one of his films. At first he will not believe it belongs to him, but the photographer assures him that it does. He is attracted and charmed by the girl's face and determines upon finding the original at all costs. He walks the thoroughfares and looks into the faces of every passing female until he at last sees her with his chum, begs an introduction and secures an invitation to visit her home. He accepts and the longer he stays at her home the better acquainted they become. He lingers, and the longer he lingers the more he hates to leave. Eleven o'clock comes and he goes—as far as the front door, where he delays his going until 4 a. m., and it is doubtful that he would have gone them if Ma and the policeman had not put in their appearance and started him on his way. The next morning. What a difference. Nan lies in bed until 10 and poor Charlie has to get to work at 8. Both are tired and sleepy; he gets very little sympathy from his fellow workers, who have evidently gotten wise to the girl in the film.—Released January 20.

CAST UP BY THE DEEP.

Drayton, a man of means and social prominence, sequesters himself in an obscure fishing village for rest and quiet. He finds much diversion and novelty in coming in contact with the fisher folk of the settlement. He becomes acquainted and finds companionship with a young fisher maiden who appeals very much to his fancy because of her extreme simplicity, so unsophisticated and free from the arts practiced by society, of which he has become heartily sick. He grows very fond of the girl and falls in love with her. She is very fond of him, but cannot understand why one of his station and breeding should show her so much attention. His courtship is noticed by her people and they do not hesitate to tell her that his purpose cannot be honorable, and the poor child is in a quandary between the promptings of her heart and the suspicions which have been aroused by whispering distrust; she refuses to listen to his protestations and proposal of marriage. The little fisher maiden marries one of her own class, a coarse fellow of violent nature. Five years later she is a widow with a child. Drayton is still a bachelor; he cannot forget his "mermaid," as he is wont to call her. He tries to forget what might have been and resorts to the gayeties of society, and this summer finds him with the smart set, cruising in a yacht the shores where he first met the "child of the sea." He is thinking of her; "half in fun and whole in earnest" he writes a note to her, places it in an empty champagne bottle, corks it and throws it overboard, hoping that it may drift to her and let her know that he is still waiting for her. Sitting on the jetty, she is looking pensively out to sea, dreaming of the happy days of Drayton's wooing. She is startled by the approach of another wooer who declares his love. As she again looks listlessly into the deep she espies the bottle; she asks her suitor to get it. He wades into the water, gets the bottle, breaks it and cuts his finger trying to extract the note. She is all sympathy, forgets the note and tells him to throw the bottle back into the sea; thus it is decided by the fates that she and Drayton remain apart, she happy in the thought of his love, he in the hope of hers, rather than a life of incompatibility in marrying above or beneath one's social station.—Released January 21.

IT DID LOOK SUSPICIOUS.

Circumstances did look suspicious; this is the explanation: Mrs. Dingley's diamond ring is too large for her finger and she asks her husband to have it fixed. He takes it and lays it beside his plate on the breakfast table until he finishes his meal; the maid brings in the morning mail and, after looking at his letters, Mr. Dingley suddenly realized that the hour is late, puts on his hat and coat, hastily pulls his handkerchief from his pocket and drops the ring. A few minutes afterwards the milkman who serves the Dingleys happens by on his rounds, finds the ring, shows it to the ashman, and goes back to Dingley's house and gives the ring to the maid, with whom he is very much in love. The maid, delighted with the gift, shows it to the cook. Mr. Dingley toward evening happens to think of his wife's ring; discovers his loss, hurries home, and tells his wife he left it on the table at breakfast. The police are noitfied; a detective comes to the house with the policeman of the post, who, by the way, is crushed on the pretty maid. All the servants are summoned into the dining room and questioned. The cook tells of the ring the maid showed her; at once the ring is identified, and the maid with the rest of the servants are taken to court. The milkman is arrested; he tells the judge that he found the ring, and the ashman saw him pick it up. The ashman is brought in; he corroborates the milkman and the mystery is solved. The judge lectures Mr. Dingley on forgetfulness and carelessness, gives Mrs. Dingley her ring, dismisses the case and honorably discharges the accused maid and milkman, who leave the courtroom arm in arm, smiling and happy.—Released January 24.

THE GIRL OF THE MOUNTAINS.

Harold Brandon, a young broker, seeks rest and recuperation in the mountains. He is welcomed into the home of David Lewellyn, whose daughter, Gwymeth, takes upon herself the office of nurse and companion to the invalid. He is attracted by the athletic beauty and wholesome nature of the girl, and it is not long before they grow very fond of each other. She accompanies him in his strolls, and whenever his strength fails she is at his side to administer to him. He grows stronger every day, an dat the end of three or four months he returns home—physically a strong man, morally a weak one. He promises to write Gwymeth, but the fact is he is engaged to a girl in the city and soon forgets the girl of the mountains and all his fair promises. Six months later Harold marries the society girl. A friend of his wife extends an invitation to her and Harold to spend part of their honeymoon at her mountain home. Harold has never told his wife about Gwymeth. They visit the mountain home of their friend, located in the same region as the Lewellyns. Harold and his wife, taking a long ramble through the mountains, are overtaken by a storm and lose their way. Night fast approaching, he goes in search of help. Unexpectedly he finds himself again in the home of Gwymeth, to whom he appeals for assistance and begs her to save his wife. Notwithstanding her indignation, Gwymeth goes out and brings his wife safely to her home and shelters them for the night. On the following day she directs them to their friend's home and scornfully rejects all recognition of her kindness, reflecting upon the perfidy and weakness of man's moral cowardice.—Released January 27.

WHEN A MAN'S SINGLE.

American

This story tells the tale of one man, who, having once experienced married bliss, thought he would be more contented to trot in single harness and was quite as capable of running an establishment as his better half. But he was not, and a very short experience told him so in unmistakable terms. One particular morning, of a particular kind familiar to most, or at least some men, he quarreled with his spouse at breakfast, for no other reason than that he was feeling out of sorts with himself; she was sweet and considerate, as all wives are, until sweetness ceased to be a virtue and she decided to leave him to "gang his gait alone" and she left him to return to a girl's first, and most stable love, her mother. The young husband was somewhat non-plussed on his return from the office the same evening, to discover that his wife had made good her threat of leaving him for good and all, but man-like thought for a brief spell that freedom tasted good. He commenced operations in the kitchen, lead in that direction by the gnawings of an empty stomach, he succeeded in doing his best to break up housekeeping and most of the available crockery and kitchen utensils, and after finding out that a crust of stale bread was decidedly cold comfort, sought the assistance of the employment agency. The specimens they sent for his approval did more than anything else to bring him back to a normal condition of mind and in despair he begs his wife to return. She does so, but disguised as a nigger wench. On viewing her orderly household in the state of disorder it happens to be in, she very naturally faints. On applying restoratives, to his astonishment, he discovers that her complexion is adjustable, and comes off. Under the black he sees the wife of his bosom, who is as well pleased as he is to fall into his open arms, leaving most of her complexion on his face, but that is a small matter. He promises to be good, kind and considerate, and just like a good sweet woman, she wipes the slate clean, and they begin all over again, with little fear that he will venture the experiment again.—980 feet. Released January 23.

BERTIE'S BANDIT.

Bertie is an embryonic botanist. He is pottering with some flowers in the garden, when Nell, the idol of his dreams, passes. He runs out and escorts her home, pleading soulfully with her to marry him. Nell is a full blooded western girl and while she admires Bertie for many things, she prefers a real man for a husband. News comes from Nell's uncle in Red Cloud that he is going to sell out his store and go back to Vermont. Nell and her mother set out for Red Cloud, and Bertie, determined to prove himself a man, accompanies them. At Tucson, the stage is late, and growing impatient, Nell and Bertie start out for Red Cloud on foot. Bertie purchases a burro to pack their baggage and it happens to be a burro formerly in the employ of "Tiger Jack," the lone bandit, who has caused the community to quake with fear. The Tucson-Red Cloud stage is held up by "Tiger Jack," and with the property of the passengers, he makes off into the hills. Bertie and Nell and the burro are plodding along toward Red Cloud. Bertie's time is divided between making love to Nell and rapsodizing over the botanical specimens along the way. He does not observe the disappearance of the burro, and eventually is forced to desert Nell while he goes in pursuit of the wayward animal. Instinctively, the burro wanders into the hiding place of "Tiger Jack" and a moment later Bertie encounters the bad man. Bertie is timid until "Tiger Jack" contemptuously destroys Nell's hat, which is on the burro's pack saddle. Then the botanist loses his temper and wallops the bandit. He is putting the finishing touches upon the

bandit, when Nell comes up. She is amazed at the powers of her lover and lavishes congratulations upon him. He takes it in a matter-of-fact sort of way and calls for a rope. When the sheriff's posse rides up a few moments later, "Tiger Jack" is helplessly bound. The sheriff informs Bertie that he is entitled to the $5,000 reward offered for the capture of the outlaw and the story closes with the botanist enriched by a bank roll and a bride.—985 feet. Released January 26.

FATE'S TURNING.

Biograph

John Lawson, Jr., owing to his father's illness, has borne the burden of business, and unaccustomed to the absolute responsibility, suffers a nervous breakdown. His father, now well enough to look after affairs, suggests he take the rest cure at a summer resort. This he decides to do and, bidding adieu to his fiancee, he departs, arriving at the summer hotel the same day. In the dining hall he is attended by a pretty waitress to whom he takes a great fancy. Several days elapsing, we find him deeply smitten with the girl to the neglect of his fiancee to whom he fails to write. Escorting the girl to her home, they become betrothed, he presenting her with an engagement ring, promising to marry her immediately. This, of course, is a most dangerous step, and after a week or two, John is called hurriedly to his home as his father's health has taken a bad turn, his life being despaired of. So urgent is the message that he does not have time to see the girl before his departure. His father dies and he, in the excitement of the occasion, has almost forgotten the little waitress, when a letter of appeal comes from her. John now taking his father's place in society and business, reasons that an alliance with the waitress is out of the question, and writes to her to that effect. This letter is a crushing blow and she goes to the boy's home to plead with him that he may be made to realize the disastrous result of his determination. She arrives at a time when there is a "Doll Party" in progress, and comes face to face with John's fiancee, who meets her with scorn. She receives very little better treatment from John himself, and so goes back to her furnished room to suffer alone for the trust she had placed in him. Some time later she learns that he is to be married and making one last effort takes up her baby and rushes to the home, entering just as the marriage is about to take place. Her pitiable condition wins for her the sympathy of all present and a feeling of scorn is directed towards John, especially from his fiancee, who leaves at once with her mother. John, of course, has always loved the girl, and it was false pride that prevented his marrying her. Now this has dissipated in the realization of his duty so the minister who was to perform the ceremony as originally planned, marries John and the poor unfortunate girl.—998 feet. Released January 23.

THE POOR SICK MEN.

Don't attempt to fool your wife for you are sure to pay the penalty, even though wifey may not be aware of your self-inflicted suffering. This was the sad experience of the father and son-in-law our story has to do with. Mrs. Wilson secures seats for the theater as does also her daughter, Pearl, each expecting their respective hubbies to accompany them thereto. The men, however, have other fish to fry, both having a weakness, each unknown to the other, for the green baize covered table, a quiet game of draw, so when they learn of the plan of their wives they at once scheme to avoid what would now be an ordeal. The subterfuge is illness. Mr. Wilson pretends to suffer rheumatism of the foot, while son-in-law has a violent headache. Of course, neither of the men know why the other is so anxious to avoid going to the theater with the ladies. Steeped with abject sympathy, they consent to go unescorted. Now the men are up against another problem, that is, how to avoid each other. Wilson is the first to make the get away and makes hurried tracks for the club room where he is deeply engrossed in the game when son-in-law arrives. Consternation besets both at this meeting and when Wilson exclaims, "What are you doing here?" son-in-law answers, "I came after you." Well, the truth of the situation prevails, and they make the best of it by becoming partners in the little indiscretion, both taking hands. They have hardly started in when there is a cry of alarm occasioned by the butting-in of the police and the majority of the players are "pinched." Wilson and his son-in-law elude the cops by getting out on the fire escape, not, however, without losing their coats and hats, which they left in their hurried decamping. Coming back to the room they find the entrance still guarded, so a disguise is their only hope, so they must resort to desperate means. Climbing up the fire escape, the son-in-law enters a room above and pilfers a small boy's suit, which, when donned, makes him look like a ten-year-old. Father manages to get a policeman's coat, belt and hat from a flat kitchen where Biddy is entertaining her copper sweetheart. This way they manage to get by the guards, but their trouble has only just begun for the father is taken for a real cop and placed to guard a street corner and the son-in-law, mistaken for a "mamma's pet," is set upon by a gang of hoodlums. However, they manage to get home just ahead of their wives, who are excessive in their sympathy for the poor sick men who had to remain at home and suffer from their illness, while they enjoyed an evening at the theater. You may imagine that the episode proved a lasting lesson.—991 feet. Released January 26.

Among the Picture Theaters

THE ROLL OF THE STATES.

ARKANSAS.

Esco H. Butler has purchased the interest of his partner, Robert D. Howell, in the moving picture business in Russellville, including the Electric Theater and the Crescent Airdome. Mr. Butler is wide-awake and progressive and will make every effort to give the public the best of pictures and vaudeville, a policy which has made this place of amusement a success in the past. The house is well equipped and handsomely decorated, well lighted and ventilated and comfortably seated with opera chairs. Duplicate machinery is installed throughout the house. Mr. Butler is proprietor of the Butler Film Exchange of that city, which enables him to give his patrons the very best film service. A number of improvements are contemplated, among them being an electric announcer, which will at all times show the title of the picture, or vaudeville act, as the case may be.

The Novelty Theater of Portersville has been entirely remodeled, which has increased its capacity and added to its attractiveness.

GEORGIA.

Application was recently made for a charter for the Palace Amusement Company of Macon, with a capital stock of $10,000. The incorporators are J. B. Melton, E. W. Gould and L. A. Mitchell. The purpose of the new concern is to operate a moving picture theater in Macon.

ILLINOIS.

Both the Family and the Globe moving picture theaters of Danville have been purchased by L. C. Parker of Indianapolis, who represents a company that owns a large number of picture houses throughout the state.

The Chautauqua Film Exchange has been opened at 356 Dearborn street, Chicago. L. F. Swathhout is president; R. D. Scarlett, secretary and treasurer; Normal G. Palmer, manager, and Clarice Rogalla, superintendent and assistant manager.

IOWA.

The Pastime Theater of Maquoketa, formerly owned by Messrs. Roberts and Wright, has been purchased by J. P. Borderson.

KANSAS.

The Elks theater at Caney has been purchased by Russell Mahan.

The Crystal is the name of a handsome new moving picture theater recently opened at 102 South Main street, Hutchinson, by J. F. Davis and Geary Redd. Mr. Davis, the manager, assures the public that the house will be conducted in a clean, up-to-date manner. Independent service is used.

The moving picture and vaudeville theater on the east side of the square, Iola, formerly known as the Queen, has passed under the management of F. J. Funkhauser, who conducted the Stardome in that city during the past summer. The name of the theater has been changed to the Star.

Frank Granger, of the Rohrbaugh moving picture theater at Ottawa, has adopted a novel plan for increasing the efficiency of his screen. Mr. Granger read of the discovery that a French plate mirror makes the very best screen obtainable upon which to throw moving pictures. But the price of same being prohibitive he proceeded to make something as near like it as possible. He purchased a lot of silver paint and after stiffening the screen silvered the entire surface, with the result that the pictures show more clearly and more lifelike than on the plain screen.

The West Broadway Theater Company is erecting a new moving picture theater at 1736 West Broadway, Louisville, which it expects to be able to open to the public some time in February. The builders say that when completed it will be one of the finest places of amusement south of the Ohio river. It will cost $12,000 and will have a seating capacity of about 500. The front of the structure will be of green and white enamel brick. One of its features will be five large light globes in addition to hundreds of incandescent lights. Fred Dolle is president of the West Broadway Theater Company. Fred Hoffman vice-president, and Henry Reiss general manager. The Royal Theater company will erect a new theater at 1809 West Broadway at an estimated cost of $10,000.

MARYLAND.

A new theater will be erected at 333 Market street, Baltimore, by the Moving Picture Company of America, which controls several other similar houses on Market street.

William N. Yearly will open a moving picture theater at 122 East Baltimore street, Baltimore.

The Eureka Amusement Company will erect a picture theater at 1435 West Lafayette street, Baltimore.

An up-to-date moving picture house will be erected at Baltimore and Gilmore streets and Frederick avenue, Baltimore, by John K. McIver.

Arrangements are being made for the erection of a new moving picture theater at 1940 West Pratt street, Baltimore, which will have a frontage of 30 feet and extend to a depth of 80 feet. According to the plans the facade will be of ornamental metal, surrounded by numerous electric lights. The plans are being prepared by Architect F. E. Beall. The estimated cost of the building is $10,000.

The Cosmopolitan Theater Company of Baltimore announces that it contemplates the construction of a handsome moving picture theater at Baltimore and Green streets. The facade will be of colonial brick and richly ornamented, while the plans for the interior construction call for a large auditorium finished in hardwood, tile and onyx. Plans have been prepared by Architect J. E. Kubite,

MASSACHUSETTS.

Joseph A. L. Chaplain will conduct a moving picture theater at the Broadway, Revere.

The New Broadway theater, in Lawrence, one of the most imposing in the state, will be devoted exclusively to pictures.

The Premier is the name of a new motion picture house opened at Norwood by Chas. Hubbard.

Michael H. Lyons, of Springfield, has awarded the contract for the erection of the Palace moving picture theater in that city, to Joseph LaBroad. The cost of the same will be about $9,000. H. L. Sprague of that city is the architect and will have charge of the construction. It is expected the theater will be ready for occupancy about the last of February.

Clarence Cowells of Waverly, will conduct a moving picture theater in the opera house in that place.

The town of Weir is to have a moving picture theater which will be located in Foresters Hall.

The moving picture theater formerly conducted in National Hall, Winchendon by George H. Morris, has been purchased by Guy S. Bridge, who will continue to conduct the same.

The Grand is the name of the moving picture theater opened in Polish Hall, Warren.

Memorial Hall at Lee has been leased for a number of years by J. Joseph Carey, who will use it for moving picture exhibitions.

J. C. Burke and Son have been granted permission to erect a moving picture theater at 124 Main street, Springfield, at a cost of $5,000.

The Gilmore moving picture theater was recently opened in Springfield.

The Lily moving picture theater of Florence has been purchased by F. B. Starks and John Day, who will conduct the same in a thoroughly up-to-date manner.

Harry Archer is the new manager of the Scenic moving picture theater, South Main street, Fall River.

Pero Morris is now the sole proprietor of the Davis and Morris moving picture theater, of Greenville, having purchased the interest of his partner, Leslie W. Davis.

The moving picture and vaudeville theater being erected by Max S. Slavit on Washington street, Haverhill, will be opened to the public in the very near future. The house will have a seating capacity of 600, the seats being of the new collapsible pattern and very comfortable. The house is provided with dressing rooms and retiring rooms for both ladies and gentlemen. The booth will be placed in the center, thus throwing an even and steady ray of light on the screen. Tungsten lamps are used in the lighting. Especial provision has been made for good ventilation. Two large ventilating ducts in the front and rear of the house will admit fresh air, which will be revolved and kept constantly fresh and clean in the house at all times by the use of a two-horse-power dynamo which will work the fan in front of the house. There will also be grilles through which the foul air will be driven. Ample provision has also been made for exits which are wide and easy of access. An asbestos curtain will also be hung.

MICHIGAN.

The Temple theater at Detroit has installed a system whereby it is enabled to exhibit its pictures in a fully lighted house. The system was installed by S. L. Rothapfel, of Forest City, Pa., inventor of the process wihch is owned by the Motion Photoplay Company, a concern controlled by B. F. Keith, the well known vaudeville man. The Temple has secured the exclusive use of the device for two years in Detroit. It is claimed all the jerkiness and eye strain which made the early moving pictures so hard on the eyes has been removed by the new process, and the detail of the picture is brought out with much more clearness than could be done in the old way. All the houses on the Keith and Orpheum circuits will be equipped with the device in due time, the first one being installed at Philadelphia and later in New York, Cleveland, Cincinnati, Columbus and Indianapolis.

The Park Theater is the name of a new moving picture house to be erected at 303 Woodward avenue, Detroit.

Rees LeRoy of Calumet, who recently invented a single lens dissolver for use on the song slide machine, has invented a new process for the silvering of curtains for moving pictures which makes the pictures stand out as near real life as possible, it is claimed, with very beautiful light effects. Mr. LeRoy has already installed the new curtains in the Grand and several other theaters operated by D. E. Rice and expects to manufacture them in Calumet for the general trade.

The Idle Hour moving picture theater will be opened in the Kriesel building, North Front street, Dowagiac.

The latest addition to Detroit's list of theaters is the Dreamland which was recently opened at the corner of Oakland avenue and Bethune in the midst of a thickly populated section of the city, and it is predicted that the new theater will be immensely successful. The house has a seating capacity of 600, and in building and equipping it especially for a theater, the owners have spared no expense to make it modern, safe and comfortable. Continuous performances, consisting of refined vaudeville, moving pictures and illustrated songs will be given from 2 p. m. to 10:30 p. m. daily. The vaudeville acts will be changed three times a week. New pictures every day.

Carl Ray, who has purchased the Temple theater in Muskegon from A. J. Gilligham and E. M. Smith, is now in control of all the theaters in that city, including the three moving picture houses.

The Colonial Pictorial Playlette is the name given to the pretty and attractive moving picture theater recently opened on North Washington street, Owosso, by J. N. Zimmerman. Mr. Zimmerman has spared no expense to make his theater one of the handsomest in the city. The cozy apartment is finished in colonial style. The lobby is finished in quartered oak and a large mirror hangs on each side wall. Small boards, bearing legends in which there is a great deal of good philosophy are posted in conspicuous places, while the front of the ticket office is done in plate glass. One is delighted with the simplicity and beauty of the interior. The wainscoting is grained to closely resemble the quartered oak, while the paper is a russet brown. The floor clopes gently toward the front and the house is seated with comfortable opera chairs. The operator's booth is fireproof, being of sheet iron, and is equipped with one of the latest machines which throws a clear, steady picture. The house is well provided with exits.

The Nickelo, of Buchanan, formerly operated by Harry Weaver, has been purchased by George Shinn, of Hammond, Ind.

The Gem Electric Theater, located in the Conklin building at Hartford and operated by Messrs. Hotchkiss and Brown, has passed into the hands of Will Lay, who will continue to operate the house.

MINNESOTA.

The Faribault Family Theater recently installed a new No. 6 Powers motion picture machine, which makes it able to render still more efficient service to its many patrons.

A new moving picture house was recently opened in the Hinds block on Lewis street, Shakopee, by Supt. T. E. Harris of the electric light plant, under the management of G. O. Gough, late of Oklahoma City.

Messrs. Latham and Stout, proprietors of the Gem Theater of Owatonna, have decided to eliminate vaudeville from their program and accordingly have removed the stage from their theater, which will give additional seating capacity, and in the future will devote their energy to presenting the very best class of pictures.

MISSOURI.

The People's theater is a new vaudeville and moving picture house recently opened at Excelsior Springs under the management of the Cunningham Brothers. The theater is thoroughly up-to-date in equipment, is heated by steam and brillianlty lighted with numerous electric lights.

The Star, a handsome new vaudeville and moving picture theater, has been opened at 113-115 East Fifth street, Joplin, by E. Simmons, whose previous experience as manager of the Theatorium has enabled him to carry his ideas into execution with unusual effectiveness, thus making his house equal to the best in that section, and finished in a manner which would do credit to a more pretentious playhouse. The house will seat about 600 persons and is well provided with entrances and exits.

The aisles are wide and the seats are the latest type of opera chairs, large and comfortable. Steam heat and automatic ventilating devices insure the comfort of the audiences both winter and summer. Admission prices 10 cents for adults and 5 cents for children with no reserved seats.

The Bijou moving picture theater of Louisiana, formerly owned by J. C. Yager, has been purchased by Messrs. Gil Hinshaw and D. O. Weaver, who contemplate making extensive improvements in the house.

N. K. Syngeleder, of Huntington, Va., has leased the Potts building at Mexico, with the intention of converting it into a moving picture house.

The Virginia, a new $40,000 moving picture and vaudeville theater, erected at Vermont and Virginia avenues, St. Louis, by August A. Busch, was reecntly opened to the public. The theater, which has a seating capacity of 1,000, is one of the most elaborately equipped buildings of its kind in the city. Vaudeville and moving pictures will be shown. H. M. Schmits is manager.

The St. Louis Motion Picture Company of St. Louis, has been incorporated with a capital stock of $85,000. The incorporators are Anthony C. Wagner, E. O. Goebel, J. N. Aranz and others.

The Princess, one of the most modern and up-to-date moving picture theaters in Springfield, was reecntly opened at 408 East Commercial street that city by the Merchants Amusement Company, under the management of Jerry Rose. It will have its own steam heating plant, the only theater in the city which can claim this distinction. The front of the building is especially artistic. Association films will be used.

A new moving picture theater has been opened at Trenton by G. R. Spore, formerly of Moberly.

E. W. Linn, an experienced theatrical manager of St. Louis, has leased the Calvin Opera House at Washington, which will be conducted as a vaudeville and moving picture house.

A moving picture theater has been opened in the Watson Opera House at Bevier, by Ed. Watson, his son Charles and Roy Brammer.

I. P. Williams, manager of the Delphos Theater at Carthage, has installed a new picture machine which has all the latest improvements and is so arranged as to absolutely protect the films from fire.

The St. Louis Motion Picture Company has been incorporated at St. Louis with a capital stock of $85,000 for the purpose of manufacturing and dealing in moving pictures. The incorporators are Anthony C. Wagner, J. N. Arens and O. E. Goebel.

Articles of incorporation have been filed for the Carragien Amusement Company, of St. Louis, with a capital stock of $100,000, fully paid, to do a general business in films and motion picture machines. The incorporators are: James B. Carragien, Thomas C. Montgomery and John H. Boogher.

The Fireproof Film Company, of which Gustave Cramer, of the Dry Plate Company, 1821 Chouteau avenue, St. Louis, is president, has abandoned the idea of establishing a plant for the manufacture of moving picture film in St. Louis on account of the smoke laden air. The company will locate its plant in Rochester, N. Y., and ground has been broken for the building in which hundreds of skilled workmen will be employed. The capacity of the plant when completed will be two hundred thousand feet of film per day.

The Bijou, the popular five cent theater of Louisiana, formerly operated by John C. Yager, has been purchased by Messrs. Gil Henshaw and Dave O. Weaver. The new owners will use every effort to conduct the Bijou according to the very best standard and will make many needed improvements for the benefit of its patrons.

A. A. Busch is making arrangements to open a new moving picture theater at Vermont and Virginia avenues, St. Louis.

A new moving picture theater will be erected on Grand avenue, St. Louis, by the Otecy Amusement Company.

MONTANA.

W. J. Hartwig, who operates the Orpheum in Helena, will erect another theater in the same city on Main street, at the foot of Grand.

The North West Amusement Company of Butte, has been incorporated with a capital stock of $15,000 for the purpose of renting and leasing motion picture. Directors: A. S. Bailey, J. F. Stone, E. T. Lowman.

NEBRASKA.

The Vaudet, a new moving picture house, has been opened in Green's theater building at Creighton, by Mr. and Mrs. C. L. McDonald, who propose to supply the people of Creighton with clean, wholesome entertainment.

A moving picture house has been opened at De Witt by Messrs. Eddy and Clark.

The moving picture theater at Exeter, formerly conducted by Squire Yates, has been purchased by Messrs. Dierberger and Backes of Beaver Crossing, who will conduct houses in both places.

Messrs. Marvel and Parker of Grand Island, have opened the Lyric, a new moving picture theater in the Kesterson building at Fairbury.

The Lyric, a new moving picture theater, has been opened at Pawnee City under the management of Lloyd L. Musgrove, an experienced motion picture man.

The Orpheum is the name of a new moving picture theater recently opened at Sidney.

The Ideal moving picture theater, of Auburn, has been purchased by S. W. Eustice and W. L. Bousfield, young men of energy and exceptional business ability, who propose to give the people of Auburn and vicinity, high grade, clean entertainment.

The Lyric moving picture theater, of Beatrice, has been undergoing important improvements, which has added much to the convenience and comfort of its many patrons.

The Ord moving picture theater of Ord, has been purchased by Albert Lee, formerly of Broken Bow, who will be assisted in his undertaking by Earl Foss an experienced operator who formerly conducted a moving picture house at Julesburg, Colo.

A new moving picture house has been opened in the Lancaster block at Havelock, which will be under the same management as the Wonderland theaters of Lincoln.

Arrangements have been made by C. L. McDonald, of St. Joseph, to conduct a moving picture theater at Creighton.

Messrs. Dierberger and Baches, of Beaver Crossing, have purchased the moving picture theater at Exeter.

A new moving picture theater has been opened at Fairbury by Messrs. Marvel and Parker, of Grand Island.

Messrs. Yeagle and Guire have a moving picture house at Sidney.

The Lyric, one of the most popular moving picture theaters of Beatrice, has just undergone extensive improvements, which have added greatly to that already attractive house.

The Stella Amusement Company of Atlantic City will conduct a moving picture theater at 1509 Atlantic avenue, where only the very best films will be offered. The house will be under the management of Joe Cantes, the hustling moving picture promoter and proprietor of the Luna theater, at Mississippi and Atlantic avenues.

A moving picture theater will be opened in the Opera House at Hackettstown.

Plans are being made to open a moving picture theater at Spring and Sylvan streets, Hoboken, by Samuel Dressler.

The Broad Amusement Company, 9 Clinton street, Newark, has filed articles of incorporation with a capital stock of $25,000. The incorporators are Henry Robrecht, William Kiehm, and Louis Schlesinger, all of Newark.

M. C. Sire has opened a picture theater in the Broad Street theater at Newark.

NEW YORK.

The Cazenovia, a moving picture theater located at 2110 Seneca street, Buffalo, formerly owned and operated by J. M. Blendinger, has been purchased by Robert Seibert for a consideration of $8,000.

The Buffalo Bill and Pawnee Bill Film Company was recently incorporated with a capital stock of $100,000 for the purpose of manufacturing motion pictures and supplies. The incorporators are P. W. Craft, T. W. Evans, J. S. Watson, all of 248 West Fifty-third street, New York City.

The Kinotype Company, Rochester, has been incorporated to manufacture and print motion pictures, etc. The capital stock is $10,000 and the incorporators are as follows: Timothy Barnard, Jas. H. Westcott, Herbert T. Ranney, all of Mt. Morris.

The new Plaza theater, a vaudeville and motion picture house located at William and Monroe streets, which was recently opened to the public, is considered one of the handsomest and cosiest houses of its kind in the state.

Plans have been filed by Architect L. C. Maurer for a moving picture theater to be erected at 529 Sixth avenue for the Specialty Amusement Company at an estimated cost of $5,000.

Articles of incorporation have been filed for the Italo-American Moving Picture Company, of New York with a capital stock of $2,000. It is the purpose of the company to conduct mov-

ing picture shows, etc., and the incorporators are as follows: John Testa, 290 Grand street; Luciano Monachelli, 204 Elizabeth street; Mario Trapani, 329 Lexington avenue, all of New York City.

Announcement has been made that contracts have been awarded for the erection of buildings by the Fireproof Film Company, of Rochester, which contemplate an expenditure of $800,000. The buildings will be of fireproof construction, employing large quantities of concrete and steel. The company proposes to install an electric plant and with the completion of the buildings under contract, other buildings included in the general plan will be erected. When the company was organized, something over a year ago, it was stated that its work would not be restricted to the making of film, but that practically all the articles used in photography work would be made or furnished by concerns with which the company was allied. John E. Thornton, formerly of London, is secretary of the company. The present offices of the company are at 27 Church street.

The Oldfield Auto Motion Picture Company, of New York has been incorporated with a capital stock of $2,500 to engage in the business of theatrical managers and to deal in moving picture mchines, films, etc. The directors are Lawrence H. Sanders, Isaac Lowenthal, Henry Martin, all of New York City.

A moving picture theater will be erected on Mary street, near Third avenue, Utica, which will have a seating capacity of 650.

L. B. Bassett, manager of the Clark Opera House, on West Main street, Norwich, will erect a moving picture theater on East Main street.

The Hudson-Fulton Amusement Company has been incorporated with a capital stock of $5,000 to maintain and conduct theaters, moving picture houses and other places of amusement. The directors are Jake Schwartz, 424 West 115th street; Zick Melasky, 149 Madison avenue; Louis B. Epstein, 1 West 92d street, New York City.

NORTH CAROLINA.

J. Tate Powell, proprietor of the Casino moving picture theater of Charlotte, has leased the building at 23 West Trade street where he will install a new moving picture house. The building will be thoroughly overhauled and will be made one of the most attractive amusement places in the city.

NORTH DAKOTA.

The Orpheum Theater at Jamestown has been purchased by W. W. Brown of Bemidji, Minn., who will conduct it as a high class vaudeville and moving picture house under the management of James Spaulding, whose long experience in this field assures the patrons of this house entertainment of the very highest standard.

The Biograph is the name of a handsome new moving picture theater recently opened at Grand Forks by Frank L. Gaffey. Mr. Gaffey has been the efficient manager of the Unique Theater since that popular house was opened and his ability in that capacity is so well known that the people of Grand Forks are confident that only the best of everything will be presented at the new theater.

Messrs. Will Shields and Frank Sweeney are the proprietors of a new moving picture theater recently opened at Chauncey. It is located in the Smith building on North Main street.

At a meeting of the Exhibitors' League held in Columbus, the showing of moving pictures in union depots was advocated, the idea being that the pictures will while away the time of waiting passengers, and at the same time provide the railroads with an opportunity to throw on the screen information concerning train movements.

OHIO.

The Lyric theater of Tiffin, formerly operated by Messrs. Bristol and Bohler, has recently been purchased by W. L. Lonsway, who will continue to operate the same.

W. L. Jamison has secured the contract to erect a moving picture and vaudeville theater at 17 South High street, Columbus, for the Pastime Company, of which John W. Swaine is principal owner. The new theater will be 40 by 110 feet, and will cost about $10,000.

The Luna theater, of Girard has been purchased by Fred Wilson, who will continue to operate the house under the name of the Orpheum, presenting a strictly high-class grade of pictures, supplemented with the latest illustrated songs.

H. H. Lampe will conduct a moving picture theater in the Goebel building in Delphos.

The Princess theater of Hamilton, recently underwent extensive improvements which transformed it into a beautiful, convenient and entirely modern picture house. A new heating plant was installed as well as a new ventilating system.

The Hippodrome is a late addition to Middleport's list of moving picture theaters, and will be under the management of Messrs. Wm. Engler and John Mayer, who will endeavor to give their patrons the best that can be secured.

The Royal theater, of Findlay, was recently purchased by W. T. Huber, a successful and experienced moving picture man, which assures the patrons of this theater high-class entertainment.

A colored moving picture theater has been opened in the Truby building, Eighth and Quincy streets, Ironton.

The Victor Theater Company, of Cincinnati, has been incorporated with a capital stock of $10,000 by W. H. Cowguill, Charles S. Bell, Robert M. Scott, I. L. Huddle, C. R. Dickman.

Contract has been awarded Architect Franz C. Warner for the erection of a moving picture theater on Cedar avenue near East Thirty-fourth street, Cleveland, for the Zeidler Amusement Company.

Articles of incorporation have been filed for the Mansfield Amusement Company, Columbus, with a capital stock of $10,000. The purpose is to operate picture shows, penny arcades and park amusements. The incorporators are Fred I. Spellman, Mary A. Hilton, Joseph Hilton, James Hilton, Gertrude E. Spellman.

The Atlantic Amusement Company of Cleveland, has leased a lot on Euclid avenue, near East Eighty-third street on which will be erected a moving picture theater with a seating capacity of 1,200. This company will also conduct another picture house on West Madison street, near West Sixty-ninth street, having a capacity of 300.

The Photoplay theater, Wayne and Fifth streets, is a recent addition to Dayton's moving picture houses and is under the management of E. M. Abbott and G. W. Hunter. The originality of the place attracts the attention. The lighting scheme combined with the beautiful decorations tend to produce a very pleasing effect.

The Jewel, another one of Dayton's cozy picture houses, has been purchased by B. G. Wheeler, manager of the Auditorium and Hippodrome theaters, who will conduct the house according to the same high standard maintained by these houses.

The Conneaut Amusement Company, of Conneaut has opened a moving picture theater in the Haskell block in that city. The company also owns the World, a moving picture theater in Ashtabula.

The Bijou theatorium, of Youngstown, formerly owned and operated by Messrs. Paul Fitch and Walter Nanitch, has been purchased by Robbins Brothers, owners of the Star theatorium, on West Federal street, near Chestnut, for a consideration of $7,500.

Messrs Chapman and McKee, who for some time have been employed as musicians at the Victory Motion Picture theater of Findlay, have opened a motion picture theater in the Odd Fellows' building in that city.

Dr. W. E. Edmiston has awarded the contract for the new moving picture theater to be erected by him on West Broad street, near Avondale avenue, Cleveland, to Contractor E. O. Jones of that city. The house will be 40 by 120 feet, costing about $10,000, and when completed will be one of the finest and best equipped buildings of the kind in the city.

OREGON.

Jack Wagner is the proprietor of a moving picture theater recently opened at Falls City, making the second one of its kind in the place.

Mrs. Amy Dobson, of Portland, has been granted permission to erect a theater on Union avenue, between Russell and Knott streets, that city, at a cost of $10,000.

PENNSYLVANIA.

Plans have been prepared for a $25,000 moving picture and vaudeville house to be erected by the Darby Amusement Company, of Darby. The building will be a one-story fireproof structure, 64 by 162 feet, with a seating capacity of 1,000.

A new moving picture theater has been opened in the building formerly occupied by the Bijou, the pioneer moving picture house of Uniontown, under the management of Messrs. Case and Miles.

The Crescent, 819 Penn street, a recent addition to Reading's list of popular moving picture theaters, is one of the finest and most attractive in the city. It has an attractive entrance, is beautifully decorated, well ventilated, has a metallic ceiling and is provided with the latest improved opera chairs. It is provided with two of the latest and best picture machines, located on the balcony. The musical equipment consists of a fine electric piano, an organ and a large music box. The Crescent is owned and operated by Ben Zerr, who has had wide experience in this field.

Record of Current Films

Believing the classification of film pictures by the nature of their subjects to be of greater importance to the exhibitor than classification by maker, The Nickelodeon has adopted this style in listing current films. Exhibitors are urged to make use of this convenient tabulation in making up their programs. Films will be listed as long in advance of their release dates as possible. Film manufacturers are requested to send us their bulletins as early as possible. Reasonable care is used, and the publishers cannot be responsible for errors.

LICENSED

DRAMA

Date.	Title.	Maker.	Length.
1-2	The Two Paths	Biograph	992
1-2	The Argonauts	Selig	1,000
1-3	In the Days of Chivalry	Edison	1,000
1-3	The Redeemed Criminal	Essanay	1,000
1-4	A Lock of Hair	Eclipse	978
1-4	The Cowboy's Innocence	Pathé	1,000
1-4	The Bolted Door	Kalem	975
1-5	Ramona's Father	Selig	1,000
1-5	His Last Parade	Lubin	390
1-5	The Crimson Scars	Melies	980
1-6	An Intrigue	Pathé	1,000
1-6	The Runaway Engine	Kalem	955
1-7	The Old Water Jar	Vitagraph	984
1-9	Shadows of the Past	Selig	1,000
1-9	The Italian Barber	Biograph	998
1-9	Tag Day at Silver Gulch	Lubin	935
1-9	The Evils of Betting	Pathé	676
1-10	The Test of Friendship	Edison	1,000
1-10	A Child's Plea	Gaumont	758
1-10	The Sophomore's Romance	Essanay	1,000
1-11	Washed Ashore	Eclipse	670
1-11	For the Love of an Enemy	Kalem	995
1-12	The Owner of the "L. L." Ranch	Melies	980
1-13	Water Lillies	Vitagraph	991
1-13	The Link That Held	Edison	966
1-13	The Heart of an Indian Mother	Kalem	1,000
1-14	The Girl of the West	Essanay	960
1-14	Coward or Hero	Vitagraph	975
1-14	A Simple Rustic Tale	Gaumont	958
1-14	The Battle at Redwood	Pathé	1,000
1-16	Buddy	Selig	1,000
1-16	His Trust	Biograph	996
1-16	Saved by Her Prayers	Pathé	331
1-17	The Sealed Letter	Gaumont	837
1-17	With Interest to Date	Edison	1,000
1-17	His Master's Son	Essanay	1,000
1-17	Three Men and a Maid	Vitagraph	1,000
1-18	Her Chum's Brother	Kalem	980
1-18	Trailed by an Indian	Pathé	495
1-18	By the King's Order	Eclipse	991
1-19	His Trust Fulfilled	Biograph	999
1-19	A Brother's Redemption	Lubin	1,000
1-19	An Englishman's Honor	Selig	1,000
1-20	Mike the Miser	Edison	990
1-20	Robbie and the Redskins	Kalem	850
1-21	The Border Ranger	Essanay	985
1-21	The Kleptomaniac's Repentance	Gaumont	965
1-21	The Marked Dollar	Pathé	968
1-21	Cast up by the Deep	Vitagraph	1,001
1-23	Fate's Turning	Biograph	998
1-24	An Eventful Evening	Edison	
1-24	A Sin Unpardonable	Essanay	1,000
1-25	The Secret of the Still	Kalem	950
1-26	How Mary Met the Cowpunchers	Melies	980
1-26	Father Love	Lubin	1,000
1-27	Girl of the Mountains	Vitagraph	
1-27	The Black Bordered Letter	Edison	1,000
1-27	Puritans and Indians	Kalem	970
1-28	The Two Reformations	Essanay	
1-2	Art and the Legacy	Lubin	950
1-2	The Misplaced Petticoat	Pathé	790
1-3	All Is Fair in Love and War	Vitagraph	973

COMEDY

Date.	Title.	Maker.	Length.
1-3	The Artist's Pay Day	Gaumont	972
1-4	Sleep, Gentle Sleep	Edison	990
1-5	When a Man Loves	Biograph	998
1-5	A Mix in Masks	Lubin	600
1-6	A Western Night	Edison	600
1-6	The Misses Finch and Their Nephew, Billy	Vitagraph	979
1-7	Love Under Difficulties	Pathé	745
1-7	The Woman Wins	Gaumont	945
1-7	The Count and the Cowboy	Essanay	1,000
1-10	Doctor Cupid	Vitagraph	987
1-11	The Twin Cinderellas	Pathé	
1-11	The Gardener's Ladder	Edison	700
1-11	The Twin Cinderellas	Pathé	705
1-11	Dusty Rhodes Takes a Flight	Pathé	249
1-12	The Rival Dramatists	Selig	1,000
1-12	The Midnight Marauder	Biograph	392
1-12	Help Wanted	Biograph	605
1-12	The Widow's Choice	Lubin	950
1-13	Max Is Almost Married	Pathé	572
1-13	So Near but Not Quite	Pathé	410
1-16	Will It Ever Come to This?	Lubin	715
1-16	Easy Coin	Lubin	250
1-16	Marguerite's Birthday	Pathé	659
1-18	Uncle's Birthday Gift	Edison	995
1-19	Changing Cooks	Melies	980
1-20	The Tables Are Turned	Pathé	981
1-20	The Girl in the Film	Vitagraph	963
1-23	Father Makes Himself Useful	Lubin	975
1-23	A Robust Patient	Selig	1,000
1-24	It Did Look Suspicious	Vitagraph	
1-25	The Lover and the Count	Edison	995
1-26	The Poor Sick Men	Biograph	991
1-28	Davy Jones in the South Seas	Vitagraph	

SCENIC

Date.	Title.	Maker.	Length.
1-9	In the Land of Monkeys and Snakes	Pathé	276
1-17	A Water Contest	Gaumont	168
1-20	U. S. Light Artillery in Action	Kalem	95
1-2	Dutch Kids	Pathé	197
1-10	The Hills of Corsica	Gaumont	243
1-11	The Home of the Seal	Edison	300
1-18	Sea Birds in Their Haunts	Pathé	462
1-24	Firemen's Parade	Vitagraph	

DAILY LICENSED RELEASES.

MONDAY: Biograph, Lubin, Pathe, Selig.

TUESDAY: Edison, Essanay, Gaumont—Kleine, Vitagraph.

WEDNESDAY: Edison, Kalem, Eclipse—Kleine, Pathé.

THURSDAY: Biograph, Lubin, Melies, Selig.

FRIDAY: Edison, Kalem, Pathe, Vitagraph.

SATURDAY: Essanay, Gaumont—Kleine, Pathe, Vitagraph

Date.	Title.	Maker.	Length.
	INDUSTRIAL		
1-6	The Fire Department of New York City	Edison	400
1-11	Wood Carving at Brienz	Eclipse	320
	TOPICAL		
1-7	The Funeral of Count Tolstoi	Pathé	230

INDEPENDENT

Date.	Title.	Maker.	Length.
	DRAMA.		
1-2	The Wise Druggist	Imp	995
1-3	The Pinkerton Man	Powers	
1-3	In the Heart of the Sierras	Bison	900
1-3	The Pasha's Daughter	Thanhouser	
1-4	Straw Ride	Atlas	
1-4	Days of the Early West	Champion	950
1-4	The Wall Partition	Ambrosio	500
1-4	At Cedar Ridge	Nestor	
1-4	For Better or Worse	Revier	
1-5	Reunited	Imp	995
1-5	Antonio Toscarino	Itala	900
1-6	A Savage Girl's Devotion	Bison	900
1-6	The Rival Engine Drivers	Lux	367
1-7	A Woman Without a Heart	Powers	
1-7	The Red Light	Great Northern	
1-7	Queen of the Prairies	Columbia	
1-7	As the Master Orders	Reliance	900
1-9	An Arizona Romance	American	990
1-9	Their First Misunderstanding	Imp	998
1-9	An Erring Son's Awakening	Yankee	
1-10	The District Attorney	Powers	
1-10	An Indian Trapper's Prize	Bison	900
1-11	Sleepy Hollow	Nestor	
1-11	The Hour of Fate	Reliance	900
1-11	The Goose Creek Claim	Revier	
1-11	Sleepy Hollow	Nestor	
1-11	Bill's Widow	Champion	950
1-11	A Letter to the Stork	Atlas	
1-12	The Empty Shell	Imp	995
1-12	Joanna of Braganza	Itala	900
1-13	The Girl and the Burglar	Solax	
1-13	The Creek Claim	Bison	900
1-13	The Vote That Counts	Thanhouser	1,000
1-14	On Kentucky Soil	Reliance	900
1-14	The Recall	Itala	900
1-14	Monte Cristo	Powers	
1-14	A Homeless Boy	Great Northern	
1-16	Melody	Imp	995
1-16	The Folks Back Home	Yankee	
1-17	Texas Ted's Defense	Bison	900
1-18	A City Wolf	Atlas	
1-18	The Will of a Western Maid	Champion	
1-18	Their New Minister	Nestor	
1-18	For the Child's Sake	Revier	500
1-18	The Blue Domino Disguise	Ambrosio	500
1-19	The Bonanza King	American	
1-19	A Sad Fascination	Itala	900
1-20	Returned to the Fold	Yankee	
1-20	A Reporter's Romance	Solax	
1-20	The Redskin's Secret	Bison	900
1-20	A Dreadful Dilemma	Lux	586
1-20	The Old Curiosity Shop	Thanhouser	1,000
1-21	A Noble Heart	Powers	
1-21	The Vows	Reliance	900
1-21	The Trunk Mystery	Great Northern	
1-23	The Dream	Imp	1,000
1-23	The Convict's Last Chance	Yankee	
1-24	When Love Was Blind	Thanhouser	1,000
1-25	For Remembrance	Reliancce	900
1-25	The Man in 23	Nestor	
1-25	Irish Hearts	Atlas	
1-25	Why He Went West	Champion	950
1-26	Bertie's Bandit	American	1.000
1-26	Phone 1707 Chester	Imp	997
1-27	Stealing a Ride	Thanhouser	
1-27	A Son of Old Glory	Yankee	
1-27	His Best Friend	Solax	
	COMEDY		
1-2	Mrs. Gaylife's Visitors	American	970
1-2	The Great Medal Competition	Eclair	485
1-2	A Well Matched Marriage	Eclair	480
1-3	Beaux Not Wanted	Powers	
1-4	Trials of Tweedledum as Policeman	Ambrosio	500
1-5	The Tenderfoot's Roundup	American	950
1-6	The Night Cap	Solax	
1-6	The Royal Wishbone	Yankee	
1-6	Baseball and Bloomers	Thanhouser	
1-6	How They Tricked Father	Lux	498
1-7	Foolshead as Inspector	Itala	900
1-10	A Tip to Husbands	Powers	
1-10	Everybody Saves Father	Thanhouser	450
1-10	The Only Girl in Camp	Thanhouser	480
1-11	How Tweedledum Pays Bills	Ambrosio	500
1-12	Lucy's Lover	American	500
1-12	The Borrowed Flat	American	420
1-13	Bill as a Jockey	Lux	465
1-13	That Is My Name	Lux	438
1-16	The Battered Bride Grooms	American	525
1-16	A Dental Disaster	American	450
1-16	Jealousy of Sosthenes Ramulot	Eclair	478
1-16	My Wife's Hat	Eclair	482
1-17	A Montana Love Story	Powers	
1-17	Lover's Trials	Powers	
1-17	Bertie's Brainstorm	Thanhouser	1,000
1-18	You Try It	Revier	500
1-18	The Country Girl	Reliance	900
1-18	A Tailor's Queer Advertisement	Ambrosio	500
1-19	His First Patient	Imp	500
1-19	The Rev. Goodleigh's Courtship	Imp	500
1-20	His Faithful Furniture	Lux	360
1-21	The Visit of a Friend	Itala	500
1-21	A New Kind of an Arm Chair	Itala	500
1-23	When a Man's Single	American	1,000
1-23	Painless Extraction	Eclair	508
1-23	Kill the Fly	Eclair	442
1-27	Prompt Payment	Thanhouser	
	SCENIC.		
1-11	Clouds and Ice Fields	Ambrosio	500
	SPORTS		
1-6	Salmon Fishing in Canada	Solax	

DAILY INDEPENDENT RELEASES

MONDAY: American, Eclair, Imp, Yankee.

TUESDAY: Bison, Powers, Thanhouser.

WEDNESDAY: Ambrosio, Atlas, Champion, Nestor, Reliance.

THURSDAY: American, Imp, Itala.

FRIDAY: Bison, Lux, Solax, Thanhouser, Yankee.

SATURDAY: Columbia, Gt. Northern, Itala, Powers, Reliance.

THE NICKELODEON

$2.00 Per Year | Published Weekly by ELECTRICITY MAGAZINE CORPORATION, Monadnock Building, Chicago | 10 Cents Per Copy

Vol. V | CHICAGO, JANUARY 28, 1911 | No. 4

THE NICKELODEON has a correct list of the places where films are shown in North America. These addresses have been stenciled and are quickly available for commercial uses. Some of the present manufacturers of films owe much of their success to this authentic list.

¶ We have now prepared a "Record of Films," including all the releases from July 1 to Dec. 31, 1910, making a booklet of 24 pages, 4¼ x 8½ inches (just right for the desk), which we purpose mailing to 16,000 exhibitors.

¶ This record is in two parts—"Licensed Films" and "Independent Films." The titles are arranged chronologically, under the makers' names. Everything will appear that is necessary for the exhibitors' information. We are sure he will keep the booklet until it is succeeded by a new edition of the same work.

¶ It is our plan to sell advertising in THE NICKELODEON'S RECORD OF FILMS. Ask for our proposition.

ELECTRICITY MAGAZINE CORPORATION, MONADNOCK BLDG., CHICAGO

THURSDAY

WAS NAMED AFTER THOR, THE GOD OF THUNDERBOLTS

We have therefore selected Thursday as very

Very Appropriate

for our release day

On that day (the day of thunderbolts) **THURSDAY, FEB. 16, 1911,** we will hurl our first thunderbolt with the proper spirit

A HEROINE OF '76

In those days when principles were exchanged with shots, men were all

Exchange Men

EXCHANGE MEN ENLIST

Rex Motion Picture Mfg. Co.

573-9 Eleventh Avenue - - - - - New York City

We will force The Sales Company to increase their shipping force.

Solax Company

MAKERS OF FINE FILMS

Scene from "RING OF LOVE"

Within the Last Three Months

THE STANDING ORDERS FOR

SOLAX

Have Increased Four-fold and There are Reasons

Our competitors admit our photography EXCELS. They **KNOW** that, mechanically, our films are without a peer. A better corps of actors cannot be found. THIS IS THE COMBINATION THAT IS RAPIDLY GAINING **SOLAX** THE REPUTATION OF BEING **THE BEST FILM MADE.**

RELEASED FEB. 17th
"MIXED PETS"
Two young married couples, one with a pet dog, the other a baby, get dog and baby mixed in a highly amusing and laughable manner.

RELEASE FEB. 3d
"RING OF LOVE"
Whoever wears this ring shall be loved. It falls into the hands of an old professor, his maid, and a policeman. Finally an old maid makes a desperate attempt to get it. Climax a scream.

RELEASE FEB. 10th
"PUT OUT"
Every scene intensely funny. The series of side-splitting complications will keep the house in an uproar.

147 Fourth Avenue **Solax Company** NEW YORK CITY

THE NICKELODEON

PUBLISHED EVERY SATURDAY BY THE

ELECTRICITY MAGAZINE CORPORATION

MONADNOCK BUILDING, CHICAGO

ED J. MOCK AND PAUL H. WOODRUFF, EDITORS — JAMES B. CRIPPEN, ASSOCIATE EDITOR

LONG DISTANCE TELEPHONE: HARRISON 3014

NEW YORK OFFICE: 1433 HARTFORD BLDG., 41 UNION SQUARE
LAURENCE F. COOK, Eastern Representative
TELEPHONE, STUYVESANT 1672

LONDON OFFICE: 36 MAIDEN LANE, COVENT GARDEN
S. RENTELL & CO., Representatives

Table of Contents

Terms of Subscription.—UNITED STATES, CUBA and MEXICO ..... PER YEAR $2.00
CANADA ..... PER YEAR 2.50
FOREIGN COUNTRIES WITHIN THE POSTAL UNION ..... PER YEAR 3.00
SINGLE COPY ..... .10

DISTRIBUTING AGENTS: The Western News Company and its International Branches.

NOTICE TO ADVERTISERS.—Changes of advertising copy should reach the office of publication not less than five days in advance of date of issue. Regular date of issue, the first and fifteenth of each month. New advertisements will be accepted up to within three days of date of issue, but proof of such advertisement can not be shown until the appearance of the edition containing it.

NOTICE TO SUBSCRIBERS.—Remittances should be made by check, New York draft or money order, in favor of THE NICKELODEON. Foreign subscriptions may be remitted directly by International Postal Money Order, or sent to our London office. The old address should be given as well as the new, and notice should be received two weeks in advance of the desired change.

ENTERED AS SECOND CLASS MATTER JANUARY 15, 1910 AT THE POST OFFICE AT CHICAGO, ILLINOIS, UNDER THE ACT OF MARCH 3, 1879.

Scene from the Selig Feature Film, "The Haven of Refuge."

THE NICKELODEON

AMERICA'S LEADING JOURNAL OF MOTOGRAPHY

Vol. V | Chicago, January 28, 1911. | No. 4

WHY DON'T THEY APPLAUD?

IT HAS been a source of wonderment to many people to observe the absence of applause at motion picture shows. It is the general rule for audiences to refrain from applauding motographic performances. Particularly is this true in Chicago, where a "hand" is about as rare as a snowball in August. The most impassioned and sensational film will pass without any of the conventional demonstrations of approval. The audience may be highly pleased, but, except in the case of laugh-producing subjects, will never show it. To those accustomed to the clamorous enthusiasm of the legitimate theater and concert hall, the reticence of photoplay audiences comes with a peculiar shock. The stranger within the photoplayhouse gates takes the surrounding silence to be an expression of cold and blighting disapproval. And then realizing perhaps that the film was too good for disapproval he begins to misdoubt if the audience be not an assemblage of stone men and human ice-cakes in their refusal to warm up to a good film or to each other. He shivers and thinks of dropping around at the morgue for a little warmth and sociability. He is only reassured later when the illustrated song comes on and the singer gets a hand or two.

Of course, there is good reason why photoplay audiences hold their silence. Applause is not so much a demonstration of approval as a tribute to the performers, a sign of admiration and encouragement; consequently when one knows that the actors of a photoplay are not within a thousand miles of hearing, there is small reason for applause. The performers seen by the audience have no more reality than a mirage. Once in a great while some episode or action becomes so vital and stirring that the audience forgets the unreality of things and breaks forth then and there into clamorous approval. But the more or less conventional applause, such as might be heard in a theater at the end of an act, has never been heard by this writer in a photoplayhouse.

And there is another (pretty good) reason. Photoplay patrons cannot clap very well, because their hands are already occupied and they cannot let go. It is the universal custom to hold one's hat in the motion picture theater. To clap means that one must balance one's hat on one's knee—a difficult feat with an overcoat on—or else drop it to the floor, which is not an encouraging thought. And the women, clinging to a picture hat, a hand bag, a pair of gloves, and possibly a bundle or two culled from the bargain counters, are in a worse fix than the men. Neither sex is in any condition to clap with much ease or gusto. It is really no wonder that people resort to stamping the floor with their feet—to the manifest displeasure of the house manager, who calls it "rowdyism" and rushes down the aisle with uplifted hand. It is possible that people would clap more—if they could.

The prevalence of the no-applause system is to be regretted. If people would only applaud what they like, and gauge their applause by the degree of their liking, it would be a good thing for the business. The exhibitor would know then exactly what *was* pleasing his patrons, and all this guessing based on hasty surmise would be eliminated. The exhibitor who thinks his patrons enjoy nothing but Western melodramas would soon get a new idea, and the belief that educational subjects spell boredom would be quickly dispelled. The patron who enjoys nothing but Western melodramas and feels nothing but boredom under educational subjects is a patron of inferior intelligence; but such patrons are always loudest in expressing their likes and dislikes. These comments come to the ear of the exhibitor, and he begins to judge the taste of his whole audience by the preferences of the loud and talkative few. In this way his appraisal gets a bias in the wrong direction. If the custom of clapping prevailed, however, the conservatitve and more enlightened patrons would get a chance to express themselves, and the exhibitor would in consequence be wiser.

Another benefit accruing from the hand-clapping system would reside in the fact that the popularity of the various film-makers could thereby be measured and compared. This would lead to larger sales of the more popular makes and to diminished sales of the less popular makes. In other words, the good makers would flourish and the bad makers suffer adversity, which is just as it should be. This weeding out process operates to considerable extent now, but a direct expression of opinion on the part of the audience would clear the air of all uncertainty, and insure prompt action.

In view of these advantages it seems too bad that audiences persist in maintaining their clam-tight attitude. If they would just open up a little, they would enjoy things better themselves, for it is always pleasant to share an opinion. But there is nothing to be done about it. The custom has grown up and will doubtless prevail for all time. The only remedy is to provide some other outlet through which the public may express itself. One means of accomplishing this end is to be noted in the interesting voting contest now conducted by the *Dramatic Mirror*. A person who examines the Merit List with discriminating eye will learn much in regard to the popular taste in photoplays.

PENNSYLVANIA'S ABSURD LAW.

OUR attention has been called once more to that section of the building laws of the state of Pennsylvania, which decrees that all picture theaters should be provided with three four-foot aisles. At the time this law was passed in 1909 a sincere but inadequate effort was made to stop it, or at least to amend it, so that its regulations would be less drastic. No doubt if all the exhibitors in the state of Pennsylvania had responded at the proper time and had joined

hands in combating this piece of arbitrary legislation the law would never have passed. But that it is beside the question. The law did pass and what is more it has been sustained by the supreme court of the state in the case of the Hippodrome picture theater at Harrisburg, as reported in The Nickelodeon for January 14.

Three four-foot aisles very obviously occupy the space of twelve feet. It is probable that the majority of picture theaters in Pennsylvania, or elsewhere, are built upon twenty-five foot lots. This means an interior width for the theater of twenty-two feet. Subtract twelve feet for aisle space and we have left the remarkable dimension of twelve feet in which to include two rows of seats. In this space, by using twenty-inch seats (the usual size is twenty-two-inch) it is possible to get three seats to a row. Here we have a spectacle of a theater compelled to offer seats to all patrons, yet forced to confine those seats to about forty-six per cent of its floor space! Taking the average depth of such a house as sufficient to accommodate a possible sixteen rows of seats, we attain the magnificent seating capacity of ninety-six individuals, for whose triumphal march into or out of the theater is provided a twelve-foot passage-way—wider than the majority of city sidewalks. Various comments on the intelligence of such a ruling will suggest themselves to our readers and need not be entered here.

We have spoken of the house whose interior width is 22 feet. But what of the house which can boast of but fifteen feet from wall to wall There are such houses in Pennsylvania. The proprietor of such a theater is left without any recourse but to shut up shop. He has not even room left for a width of two seats, and if he should elect to run a row of single seats down the middle of the house he would break the law by having two aisles instead of the requisite three. The best suggestion we can offer to relieve this very irksome situation is embodied in the following letter, which was sent to the Motion Picture Patents Company by Mr. George W. Bennethum, acting for the exhibitors of Reading, Pa.:

We wish to call your urgent attention to the theater law No. 233 P. L., 1909, now in force in Pennsylvania. This law can be complied with by the smaller theaters with the exception of the three four-foot aisle clause, as most of the photoplay houses are but fifteen to thirty feet in width. The legislature of Pennsylvania, now being in session, immediate action should be taken. We would suggest that you take it up with each individual exhibitor in this state, asking them to write to or to see if possible the representatives to the legislature from their districts, looking toward a plan to modify that part of the law which it is impossible for the smaller size houses to comply with. This law as it now stands states that theaters must have three four-foot aisles, and this is a proposition which is impossible for the small theaters to comply with, we feel that it is unjust and should be modified so as to leave the aisle question open to the discretion of the factory inspector, in all cases where the width is not sufficient to permit of three four-foot aisles.

We wish you would make a strong appeal to the Pennsylvania exhibitors by mail and through the trade journals and film exchanges, asking them to take immediate action while the legislature is in session. We are now taking up the matter with our representative, Mr. Geo. W. Sassaman, of the Berks district, and will have him frame a bill and present it before the legislature at the earliest date.

We trust that you will give this matter immediate attention, as this is not only for the interest of the exhibitors alone, but for all concerned.

We trust that every exhibitor in the state of Pennsylvania will act upon Mr. Bennethum's suggestion, and that each will make his appeal to his representative as strong as possible. It is high time that legislators were made to feel that the political power of the motion picture exhibitor might become tremendous, were he to lend all his resources to those ends.

THE BATTLE OF THE PATENTS.

IN THE legal battle between the licensed and independent interests there are three factors: the camera, the film and the projector. Because of recent court decisions the camera is at the moment the most prominent of the three. The independents have won a point, at least temporarily, in the exemption of the Wagner camera from the recent injunction order, which is equivalent to a declaration of non-infringement for the Wagner instrument, so far as the Edison re-issue patent No. 12037 is concerned. The Bianchi camera, mentioned editorially in these pages two weeks ago and described in The Nickelodeon for February, 1909, is presumably non-infringing. Furthermore, the Bianchi camera has taken pictures; but its operation is so delicate and the conditions surrounding its favorable operation so restricted that it can hardly be regarded in its present form as helping to solve the problem.

The Meredith-Jones camera, or Mapes-Jones camera as it is sometimes called, is sincerely believed by its backers to be non-infringing, although, of course, it has not been adjudicated. However, the only independent company which claims to be using the Meredith-Jones instrument has not yet released any films. The Hamacek camera, although covered by a number of patents, does not seem to have proven successful; at least it has not been adopted by any of the independent companies so far as we know. And the Gaumont camera, made under the Deminia patent and at one time considered by the independents as their strongest asset in this line, has been declared infringing. The Wagner camera, therefore, is the only one which seems to protect the independent makers.

Inasmuch as patents on the Wagner camera have not issued we can give no description of the instrument. From the best information obtainable about its operation, it is constructed on the principle of reciprocating lenses. Affidavits were offered in court by a perfectly reliable and reputable firm of patent attorneys stating that the film exhibited was made with the Wagner camera. We hope to be able to present a technical description of this instrument to our readers at an early date.

Another source of trouble for the independents is the film patent, which is covered by Edison re-issue patent No. 12192. The patents company won a preliminary injunction suit against Bradenburg in Philadelphia on this patent, but there was absolutely no defence in this suit. The Chicago Film Exchange is being sued under this same patent in the Washington, D. C., courts at present. The outcome of this suit is important, although it does not seem to attract much attention from the independents so far.

The projecting machine is perhaps the most important factor of all in the patent situation. Without entering into a discussion as to the legality of the restriction of sales on patented articles, the breathing would no doubt be easier in certain quarters if there were on the market at present a good non-infringing projection machine. Whether or not such a machine is possible in construction we leave to the inventors. Indeed, this editorial might well have been headed "Inventors Wanted."

The Grand Theater at The Dalles

By Charles F. Morris

WE always think of the far west, the Pacific coast states, as the home of an alert, happy, gayety-loving people. If there were nothing else to convince us of the truth of this surmise, the beauty and success of the picture theaters in that far region would be ample testimony. On this page we are presenting a photograph of the Grand Theater, located at The Dalles, Oregon. A glance at this picture reveals so much beauty and symmetry of construction that comment seems unnecessary. This house is owned and operated by the People's Amusement Company, Portland. The theater has a frontage of twenty-six feet, while its height above the walk is twenty feet. The total depth of the house is ninety feet. The front, which is of staff, is decorated and illumined with 250 incandescent lights. One Alba flaming arc lamp is also used in front of the house. No barker or outside musical attraction is used. The attractive appearance of its front and the use of framed posters are relied upon to attract the public eye. An electric sign spelling the word "Grand" in large letters adds greatly to its appeal.

Grand Theater at The Dalles, Oregon.
Two Hundred and Fifty Incandescent Lamps Blaze a Welcome.

The Grand Theater's admission price is ten cents. Once inside, we find a seating capacity of three hundred and eight, the rows of seats being divided by two aisles. The floor has a pitch of one inch to the foot, making the entrance approximately five feet higher than the floor just below the screen. This is enough of a drop to give every one in the house a good view of the screen when all the seats are occupied.

The fireproof operating room is eight feet square, which is considerably larger than a good many picture theater proprietors think necessary. An Edison machine is used and the throw from the operating room to the screen is sixty-five feet. The management is a firm believer in the use of direct current for projection, and in consequence a mercury arc rectifier is installed to deliver that kind of current to the arc. Although vaudeville is not at present used in the Grand, the house has a stage twenty-six feet wide and six feet deep, so that almost any attraction of ordinary size can be put on if deemed necessary. The screen itself measures fifteen by eighteen feet. The Grand is a light house. That is to say, some of the lights remain burning while the pictures are projected. For this purpose the lights are arranged not only on the ceiling of the house but also along the side walls. The ceiling lights are of course extinguished during the projection, while the side-lights, which are tinted green, remain burning. The general color scheme of the interior decoration of the Grand consists of cream and tan, with decorated poster flowers. The program consists of three reels of licensed films and an illustrated song, and each show lasts one hour. A piano is the only musical instrument in use.

The management of the Grand believes in advertising, and the local newspapers are used to considerable extent in gaining publicity for the theater. The Grand's only competition in The Dalles is an independent theater. As a city The Dalles is just about the right size to support two theaters in comfort; especially since two theaters often get along better in a community than one; the reason for this being that people will sometimes take the trouble to stroll downtown for two hours' entertainment, when the program of only one show might not induce them to make the effort.

A notable feature of the lobby is the preponderance of poster display. The manager believes in acquainting patrons with the full program before they enter, and knowing that his films are good, features them all. He also believes in emphasizing the names of the makers, which is an excellent practice; the names become in time a guarantee of quality and invite patronage. Mr. Lacey, unlike many managers of 10c theaters, is not tempted into the pitfalls of cheap vaudeville, having a firm faith in the drawing powers of a straight, legitimate picture show.

Motography in Russia

Consul-General John H. Snodgrass, Moscow, says that the most insignificant towns and villages, even in remote districts, are well provided with these amusements, and new theaters are being opened daily in the provinces.

In Moscow alone there are about eighty theaters and approximately the same number in St. Petersburg. Formerly 200 theaters were in existence, but during the past year the police authorities closed many places on account of complaints by building inspectors, and for various other reasons. These theaters were started in all kinds of rooms and buildings, wherever it was possible to secure a lease.

The theaters are now well distributed throughout Moscow, while before the thinning-out process an entire street would be lined with them. It is understood that on the Nevsky Prospect, St. Petersburg, there are thirteen, on the Grand Prospect eight, and on Garden street six. It is estimated that there are 1,200 electric theaters in the Russian Empire, and that the number of visitors aggregated last year 108,000,000. At an average admission of twenty cents, $21,600,000 was taken in.

The admission charges range from eight to sixty-seven cents, and many of the theaters are frequented by as many as 1,000 persons a night. In the better places a full orchestra in the music rooms and foyer delight the audiences during intermission, while usually a piano and violin accompaniment entertain while the performance is being given. In cheaper places mandolin and guitar clubs from the university, violin soloists, and auto pianos and orchestrals are employed to amuse the crowds which flow into the theaters from 4 o'clock in the afternoon up to midnight. On Sundays and holidays the crowds are so great that additional police officers are often required to keep the immense number of people moving and to prevent possible accidents.

During the cholera plague the cinematograph shows have been influential factors in educating the people how to prevent spreading the disease. Every night during the performances it is suggested by large letters on the curtain that unboiled water should not be drunk, and a menu in which there is no danger of inviting the plague is given. In other ways the people are warned to be careful, especially as to the water, and thus these amusement places educate those who perhaps would be less thoughful. Cinematographs are also being more and more used for educational and demonstrative purposes in schools and at lectures.

For hygienic reasons the theaters are fitted with appliances that eliminate the foul air and substitute the fresh outside air. Fans are provided in summer, so that even small rooms are kept comfortable.

The pictures shown are furnished chiefly by French and Italian firms, all of whom have branch offices there and carry large stocks. The number of American, English, and German scenes shown there is insignificant. Though it would appear that French and Italian film companies are controlling the Russian market, American manufacturers could secure a profitable share of the trade if they would cater to Russian tastes. Pictures representing American scenery and sporting events, such as baseball and football, would appeal to Russians. Any event in which a large crowd of people is shown is popular.

In order that American firms may do a successful business, it is absolutely necessary to open branch offices in the principal cities and to carry in stock a large and well-assorted supply of American pictures of unique and entertaining subjects. Some foreign concerns carry 3,000 different films in stock, which are either sold outright or rented.

Of American films, those of the Edison, Vitagraph, and American Film companies are met with. Only a few pictures are on exhibition and they are not of the class that, as a rule, are acceptable to the Russian.

The films are rented under the following conditions: One program of pictures, comprising a total length of 1,000 meters, $10.30 to $128.75 per week; two programs a week, $15.45 to $154.50.

The most popular films average 500 to 660 feet; the shortest about 200, and the longest 1,800 feet. The average requirements of the respective lengths of films have been furnished by a local institution, as follows: 15 of 60 to 100 meters, 28 of 101 to 150, 31 of 151 to 200, 19 of 200 to 250, 13 of 250 to 300, 5 of 300 to 400, and 1 of 420 or more.

The Russians are particularly interested in tragedy and drama, and such scenes as "Faust," "Troubadour," "The Siege of Saragossa," and similar ones requiring films of 600 meters are quite popular. Nature scenes, which, however, usually are short, are also in demand, especially those picturing wild and savage life. Six companies are engaged taking Russian pictures, the majority of which portray historical periods in the nation's life. Horse races, village scenes, and pictures of the interior of the country are frequently seen.

The foreign pictures are chiefly imported already printed, while Russian pictures are printed there on imported films, about 85 per cent of the latter being the production of the American Kodak Company. It is said that while five years ago only one firm made cinematograph pictures there are now over sixty actively in this business.

The machinery required, dynamo-electric and oil engines, are chiefly of Russian, German, and Swedish origin. The imports of cinematograph apparatus into Russia for the first eight months of 1910 aggregated $138,020, compared with $95,275 for the same period in 1909.

In Moscow the *Cine-Phono,* a semi-monthly journal devoted exclusively to the cinematograph trade, is published and appears to be meeting with considerable success.

The duty on machinery is 9 rubles per pood ($4.64 per 36.2 pounds); on films, 70 kopecks per funt (36 cents per 14.4 ounces).

Inspection in Atlanta

As one of the last acts of his administration Mayor Robert F. Maddox of Atlanta, Ga., called before him Fire Chief W. B. Cummings and asked that all the motion picture theaters in the city be inspected with the object of ascertaining the capacity of their fire exits.

The attention of the mayor has been called to the construction of some of the motion picture theaters. It is said that some of them have little facilities for escape should they catch on fire, some having no rear exits at all. Should the films catch fire the people who attend the shows in such large numbers would all rush to one end and a panic might ensue.

New Amusement Patents

By David S. Hulfish

It will be the purpose of this department to list all United States patents, as they are issued, which pertain to any form of amusement business, giving such data in each case as will enable the reader to judge whether he wishes to see the complete drawings and specifications of the patent. When patents of special interest to THE NICKELODEON readers are encountered, the descriptive matter herein will be amplified accordingly. A complete copy of drawings, specifications and claims of any patent listed will be furnished from this office upon receipt of ten cents.

PATENT No. 967,511. Slide Carrier for Stereopticons. Mathew A. Goodspeed, Fremont, Neb. The objects set forth are to provide a slide carrier capable of containing a number of slides simultaneously; to provide a rapid movement of the slide from its position before the lens and the quick substitution of another slide with but one movement of the stereopticon operator; and to provide an automatic slide release or dump with a movable receiving box for the slides after they have been projected. Referring to the figure, *1* denotes the slide carrier, grooved at *2*, having space for four slides, end to end. The slide being projected is in the last section, at *14*. The receiving box is at *16*, the bottom *16'* being movable in the vertical slides extending downward at the sides. The right-hand end of the carrier *1* is the operating side of the stereopticon. A movement of the handle *3* on the shaft *4* releases the slide which has been before the lens, and the operator forces a new slide before the

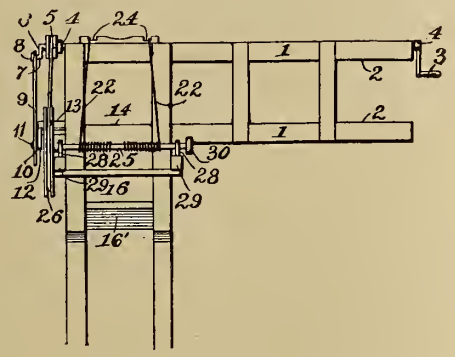

967,511.

lens by pushing along the three remaining slides, then placing in position at the right-hand end the next slide in order

968,459. Transparent Sign. Albert T. Fisher, Cleveland, Ohio. The novelty is found in the manner of applying pigments to a relatively transparent material, such as opal glass, that the sign may be visible when lighted from behind.

968,667. Dissolving Stereopticon. Maximilian Klaiber, Brooklyn, N. Y., assignor to The Modern Improvements Manufacturing Company, of same place.

The projection of dissolving effects with a single arc lamp seems alluring to inventors, the ultimate object being economy in the electric current used for projection, or the reduction of cost of the projection apparatus, or both. In the present improved lantern, the condenser system is split up to effect the results of illuminating two lantern slides, the dissolving effects then being attained by two lenses and related shutters in the well known manner. In the figure, which is a top view of the improved stereopticon cut horizontally through the middle, the condenser may be considered as being of three glasses, since the light must pass through three glasses to reach the lantern slide. The first glass *c* and the second glass *c'* are full size, that is, they are large enough to cover two lantern slides at the same time. The third glass is divided in the middle, and is composed of the two parts, *E'* and *E*.

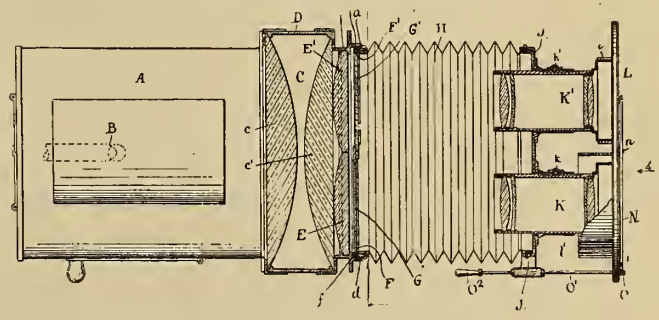

968,667.

The inventor specifies that the glasses *c* and *c'* are insufficient to bring the light from the arc lamp *B* into convergence, but that when supplemented by the glasses *E* or *E'* the light rays are converged. Thus the rays are converged separately into the two lenses *K* and *K'* and pictures are projected separately from the two lantern slides *G* and *G'*. The handle O^2 operates the dissolving shutters in front of the lenses.

Some of the claims cover the novelty of the arrangement in language so broad that their validity may be questionable. Other claims refer to the combination of a double lens system with a single bellows.

969,288. Film Reel. Frederick Knott, Portland, Oregon, assignor of one-half to Carl E. Greenawald, of same place. There are ten claims. The first and third claims read as follows, and describe the invention:

1. In a film holder for motion picture machines, a film reel comprising a circular series of positively driven rollers.

3. In a film holder for motion picture machines a film roller comprising a circular series of rollers each having a gear pinion thereon and an annular driving gear therefor exterior to the pinions.

In the figure, which is Fig. 2 of the patent, the film

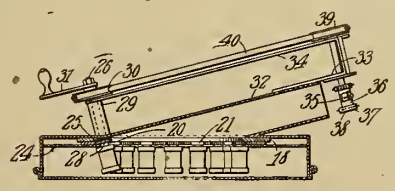

969,288.

magazine *24* has the circle of rollers in it, one of which, at *28*, is included. The film to be reeled up is taken from the motion head by the steady-feed sprocket *36* and passed diagonally down to the inclined roller at *28*, where it turns and passes around the circle of rollers

in the magazine *24*. Thus there is produced a coil of film which may be used in an endless-belt projection device by taking the leader of the film out of the magazine through a film outlet of the usual type, passing it through the motion head and attaching it to the tail of the film; this is the arrangement shown in the patent. It is possible also to remove the coil of film to a feed magazine, since it is coiled with the leader outside, and rewinding is not required.

The "Standard" projecting machine with its "automatic rewind" created some notice some two years since, but was withdrawn from the market by its makers. A similar principle was used in it.

The novelty of the present improvement is found in the apparatus and method of driving the rollers for winding up the film, and in the feature of driving all of them, or a plurality of them.

969,785. Projecting Lamp. G. A. H. Kellner, Rochester, N. Y., assignor to Bausch & Lomb Optical Company, of same place. While not primarily designed for the condenser system of a stereopticon or motion head projecting machine, the principles involved are similar, and the improvement would be found valuable when used in connection with the rear condenser of a stereopticon. The figure illustrates the arrangement of parts, a reflector being required to co-

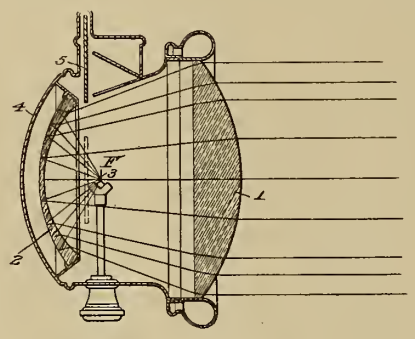

969,785.

operate with the glass before the lamp. The inventor in his description sets forth that losses result from uncorrected spherical factors in the lenses usually used for such purposes. The patent sets forth the mathematical formulae pertaining to the improved optical system. There are three claims, of which the first is representative:

1. In a projecting lamp, the combination with a light source, of a lens and a reflector, having spherical aberration of opposite signs.

Manufacture of Celluloid in Japan

Consul George N. West, Kobe, Japan, states that there are two new plants in Japan for the manufacture of celluloid, one of which, located a few miles from Osaka, expected to begin operations during November, and the other, located at Aboshi, expected to be completed by the end of December.

According to the *Japan Chronicle* the two companies show a wide divergence of opinions as to the success of this new undertaking. The Aboshi company's opinions, as expressed in the *Chronicle*, are as follows:

One of the principal materials used in the manufacture of celluloid can not be obtained in Japan and has to be imported entirely from Germany. Neither can the nitric acid or strong alcohol required be produced in Japan. When celluloid made in Japan from material imported from Germany is exported to China, India, and other countries, the freight and customs duty on the product amounts to 12 sen (6 cents) per pound. Under these circumstances it will cost more to produce celluloid in Japan than in Germany.

The Osaka company holds that—

The principal material required for celluloid can be procured in Japan cheaper than in Germany. Alcohol strong enough to meet the requirements for the industry can be produced in Tokyo. Of the materials necessary for the production of celluloid, it is contended that nitric acid is the only one that must be imported from abroad. In these circumstances the cost of raw materials will be smaller in Japan than in Europe. This advantage, combined with the lower price of labor in Japan, will, it is thought, place the Japanese product in a position to successfully compete with the foreign product in the oriental market.

The first company holds that the cheaper labor in Japan cannot compensate for the higher price of materials which must be imported, and that state aid, in some form, will be necessary for the success of the new enterprise.

It is apparent that if the manufacturers here are successful, and that celluloid can be produced in Japan at less cost than in the United States, either through state assistance or through the Japanese being able to secure camphor, which so largely enters into the manufacture, at a less price than is paid by the American manufacturers, the industry of the latter will be seriously affected.

Orientals Like Pictures

You can see moving picture shows in China, Japan and Malaysia just as you can see them in the United States and Europe, according to S. Morton Cohn, who returned to Portland, Ore., recently, after a six months' trip through the orient.

Mr. Cohn was naturally interested in the moving picture houses in oriental countries. There is scarcely a city of any size but has them, he says, and as a rule they are well patronized, though poorly arranged for ventilation and comfort. The films used are the regular films to be seen in the United States and the pictures are usually the same seen here. The Chinese seem to take as much pleasure in viewing the antics of Americans and Europeans as seen by means of the moving pictures as do the people of any other land.

"Of all the places I saw I liked Honolulu and Manila the best," saaid Mr. Cohn. "They are the most like American cities. If I were a younger man I would go to Manila to make my fortune. The other cities were interesting, but served to show how much better the United States is from every standpoint."

While in San Francisco on his way home Mr. Cohn subscribed to some stock in a corporation being organized there to conduct a string of ten-cent theaters in the Pacific northwest. Mr. Cohn said no details had been arranged yet as the company had not been incorporated. He expects the matter will be in concrete shape within a week.

A report from an American consul in a South American country states that an American missionary in his district desires to purchase a kinetoscope or other moving picture machine, the best that can be had, to operate with calcium light. Full information is desired, including description and prices of slides showing scriptural scenes and comic pictures. Correspondence should be in English. As moving-picture shows have but recently become a source of popular entertainment in that country, the consul writes this is a good opportunity to introduce American machines. The name and address will be furnished by The Nickelodeon upon request:

Advertising Machinery by Motography

By Watterson R. Rothacker*

TO the salesmen who are engaged in the selling of heavy machinery for any purpose whatsoever, moving pictures offer a means of demonstration which solves the transportation problem, and shaves off a big slice of the selling cost, to the satisfaction of the sales manager. Here's the answer:

The average weight of a reel of moving pictures is approximately eight pounds. One of these reels makes a neat package which is conveniently portable via the suit-case, hand-bag or express routes.

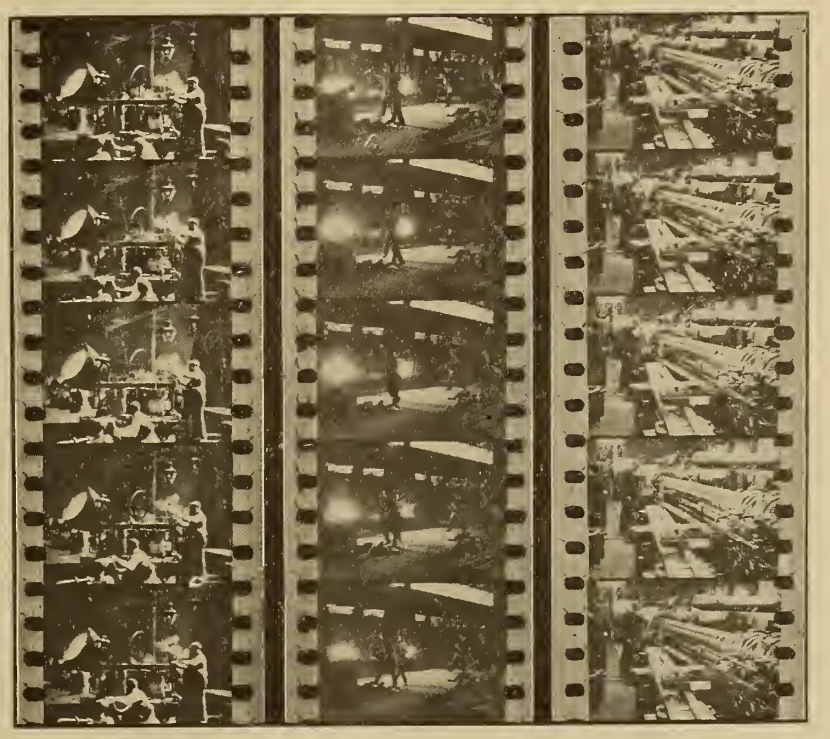

Some Examples of Films for Heavy Machinery Advertising.

Moving picture films are of a uniform size so that any standard projecting machine is suitable for use. Also many projecting machines are available all over the country, in fact the world, and the itinerant salesman can supply his needs in this respect on a rental basis.

While moving pictures of any subject are sufficient unto themselves to a certain extent, it is advisable that they be used in a supplementary sense in the same manner in which the ordinary demonstration relies on the salesman to close the deal.

Reaching the class of people most likely to respond to the advertising appeal in the material manner coveted by the advertiser, is, of course, of great importance; but the production of the setting from which the negative is taken is of more importance, so we will discuss that point first.

The photographic accuracy of moving pictures makes them reliable. Their comprehensive scope reproduces an action and series of actions in smooth and timed sequence so that their demonstrations are quite as effective as a view of the actual machine they so truly depict. However, to realize on these advantages to their utmost the original demonstration which is recorded by the camera on the negative film must be carefully planned and executed. The setting must be made with as much attention to details as is demanded by a dramatic production. A better analogy is that these moving pictures correspond to that which is termed "copy" in advertising vernacular. This "copy," whether it is prepared for the printer or the camera man, should accentuate the selling points—emphasize the advantage to the user—indicate superior features—and tell the whole story along logical lines so that the pictorial proof is convincing and sufficient to arouse the buying instinct of those who view it. When this is rehearsed before the camera the result is a moving picture demonstration which is quite as good as the original from which it was taken, and naturally that is as near perfect as the machine itself.

Moving pictures, because of these conditions which should govern their production, are also protective, inasmuch as the positive prints, which are made from the negative for exhibition purposes, are accurate reproductions and are representative of that which is best. The point I wish to bring out is that oftentimes a salesman, wearied by the monotony of repetition or travel, discouraged by a luke-warm reception, momentarily cowed by an aggressive flow of competitive talk, or suffering from any one of the thousand little annoyances which seemingly are the inheritances of his calling, will unconsciously or otherwise slight his demonstration. The disastrous result is precluded and the cause impossible where a moving picture demonstration is involved. The film is mechanically correct and indefatigable and has no ears for confusing and diverting remarks. Moving pictures comprehensively display operations which are but inadequately described by the most convincing word painter. They actually show that which the salesman *attempts* to conjure to the mind's eye. They are decidedly influential in converting the prospect so that his name appears in the sales ledger as a customer.

The exhibition of moving pictures allows a regulation of speed so that the film running through the projecting machine onto the screen can be stopped at any point and a single picture of the reel appear as stationary until it has been fully explained to the audience. [See editor's note.] The advantage of the feature is obvious.

Moving pictures are more impressive than a blueprint or "still" photograph. Animated as they are with the action of life they have an appeal which attracts. They also attract and hold the attention in its entirety because of the fact that where a moving picture is run there are no diverting influences and but one objective point, the screen upon which the pictures appear.

It is undeniably true that much interest is evidenced by both the prospect and the customer in the manner in which various machines and implements are made and

*General manager of the Industrial Moving Picture Company, Chicago.

how they are used in different parts of the world. These industrial stories are fascinating to any audience, educating to every observer, and carry the advertising message of the firm whose name they identify to each individual who sees them.

Take for instance "The Making of a Big Gun," "The Romance of the Reaper," "Mining Machinery Installed and Working," etc., etc.—these subjects are but representative of the few; the many embrace practically every branch of industrial activity.

These stories on film entertain the audience, they successfully seek the prospect, they create desire on the part of that prospect and hammer home in a manner which makes lasting recollections, knowledge which is subtle and sure in the interest of the advertiser. In other words, the consumer's buying instinct is aroused while he is being entertained.

The moving picture as a whole is an invaluable sales adjunct. Judiciously used it not only acts as a powerful publicity force, but it accomplishes the more definite task of rendering effective aid as a sales-closer. The moving picture campaign calls for expert advice of both the trained advertising expert and the knowing moving picture producer, who in order to secure best results should confer and be guided by the sales manager who knows his product and its limitations—his market and its possibilities.

[Editor's Note.—Motion picture film, even of the inflammable variety, may be safely stopped in the machine while a picture is projected provided the concentrated heat rays of the arc are absorbed by an alum cell. The construction and use of such a cell is described by David S. Hulfish in The Nickelodeon for May, 1909, and in his book, "The Motion Picture; Its Making and Its Theater." Briefly, it consists of a flat glass tank, containing a solution of alum in water, placed between the lamp and the film. Such a solution has the peculiar property of intercepting the heat rays in a beam of light, allowing only the luminous rays to pass. The solution must of course be as clear as possible, and the light should pass through an inch of it. The alum will become warm after a time, when it must be replaced with new solution. Clear water must be added from time to time to replace evaporation loss. Such a cell should effectually protect a stationary film picture for a period of above five minutes.]

The Ultra-rapid Cinematograph

A recent number of *La Nature* contains a very interesting account of the latest work of the Marey Institute. By means of a new instrument, the ultra-rapid cinematograph, invented by M. Bull, sharp stereoscopic cinematograph views may be obtained of such extremely rapid movements as, for instance, the flight of a fly, or the breaking of a soap bubble. With the ordinary cinematograph, the photographic film moves discontinuously, being arrested at the moment of each exposure. While this is simple enough at moderate speeds, it would be quite impossible where the exposures are at the rate of 2,000 a second, and the mean speed of the film 4,000 centimeters (1,575 inches) a second. These are the figures that are necessary for the study of insect flight, and these are attained in the new instrument. With such a speed the movement of the film must be continuous, and a sharp image is possible only if the exposure does not exceed 1-400,000 second, and for this the electric spark gives a light of sufficiently short duration.

The apparatus is shown diagrammatically in the figure. *R* is a wheel 34.5 centimeters (13.6 inches) in diameter, which may be turned at a high speed by means of an electric motor. It carries two long strips of photographic film to receive the stereoscopic images. On the same axis, but outside the octagonal light-proof case, is fastened an interrupter, *I*, of fifty-four strips of copper, which serve to make and break the primary circuit of an induction coil fifty-four times every turn, or 2,000 times a second. The secondary of the induction coil is connected with a pair of spark-gaps, *E*, arranged in series, the electrodes being of magnesium to increase the light. The arrangement of the two gaps and their relation to the optical system are shown in plan (left for right) in the upper left-hand corner of the figure. A condenser, *L*, is connected to the wires leading to the spark-gaps. The optical system is made clear by the figure, but the lenses are made of quartz and Iceland spar, instead of glass, so as to be transparent to the actinic rays of short wave-length for which glass is opaque. A mirror, *M*, throws the pair of images on a ground-glass screen, *D*, or, on being turned up out of the way, it leaves a clear passage for them to be formed on the films. In order to prevent the photographs from being spoiled by multiple exposure, two shutters of thin steel, actuated by springs, are released electromagnetically, one after the other, the interval being the duration of one turn of the wheel.

The movements photographed are determined as to time by fine wire prolongations of the prongs of a tuning-fork of 50 waves a second, which are photographed at each successive exposure, and as to distance by a divided glass scale, which equally appears in every picture. It is, of course, necessary to insure that the fly or other insect shall traverse the field of view just at the time that exposure is made. There is no difficulty in causing the creature to fly in the right direction, as a window is sufficient to determine the line of flight. One method by which M. Bull releases the fly at the right moment is by holding it in electro-magnetically operated forceps, which are relaxed by the same current which starts the first shutter. This works well enough with ordinary flies, but hymenoptera and some other insects hesitate and only make their flight after the exposure is completed. For such cases, M. Bull incloses them in a glass tube with a very light mica door, which is moved by the insect in its flight, and which, making a contact, sets the shutter mechanism in action.

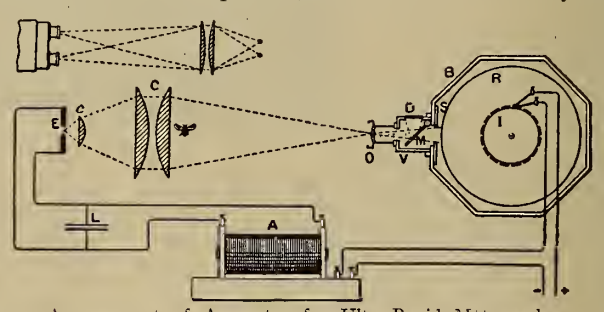

Arrangement of Apparatus for Ultra-Rapid Motography.

In order to study the movements represented on the films, which in nature are far too rapid to be followed by the eye, it is merely necessary to pass them through an ordinary cinematograph, making some fifteen exposures a second instead of the 1,500 or 2,000 a second employed in taking the photograph, and then the movement, 100 or more times as slow, will be seen, and many cases easily followed. Where a still greater slowing is required, M. Bull arranges to make the film appear stationary for a much larger proportion of the whole interval than is usual.

Two Independent Cameras

THE BIANCHI CAMERA.

NUMEROUS cameras have been invented for producing photographs of objects in motion upon an intermittent moving sensitized film, but in the camera in the accompanying illustration, invented by Joseph Bianchi, Toronto, Canada, the film has a continuous movement from one spool to another behind a lens. This renders it much more easy to operate and more simple in construction than is usual, and the basis of the exposure of the image on the moving film in an optical manner is quite novel and interesting. A single crank on one side of the box operates through suitable gears and belting the lower winding spool, which in turn draws the sensitized film from the upper roll over a guide roll downward through a feed tube in a constant continuous movement, while another gear meshing in a spiral spur rotates a longitudinal shaft, on the extreme left end of which is supported a revolving exposure disk.

On the flat side of this disk near its periphery is a transparent circular window, the axis of which coincides with the axis of the camera lens, the latter being rigidly secured to the front wall of the camera, and also is in line with the moving film behind. Within the circular aperture of the disk is a rotatable ring having sprocket teeth on the portion of its circumference extending laterally beyond the flat surface of the disk. Within this rotatable ring is secured a concavo-convex or negative cylindrical lens termed a refractor. At the rear of the camera lens combination is fixed a plano-convex or positive lens. Referring to the small illustration on the right, it will be noticed a stationary sprocket is fixed to the shaft bearing. A sprocket chain connects this sprocket with the movable ring sprocket on the rotating disk. The effect of this arrangement is to keep the transverse horizontal axis of the cylindrical lens in a horizontal position as the disk revolves. In the larger illustration the course of the rays of light from the object through the lens is shown. From the camera lens they are directed in a parallel direction by the single plano-convex lens and

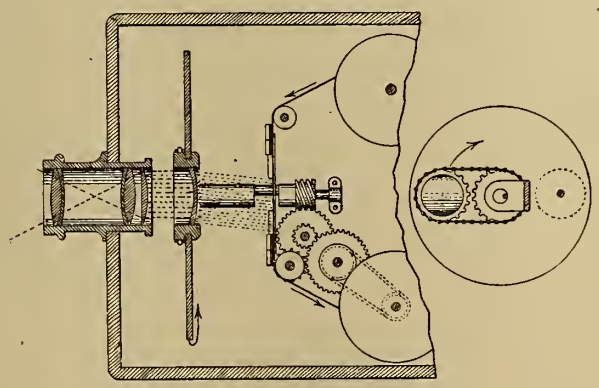

Diagram of the Bianchi Camera.

upon impinging on the movable cylindrical lens in the disk, while its direction is upward, are refracted downward with the same rapidity than the constantly moving film moves also downward, thereby impressing the image upon the film perfectly sharp and clear and always in register and line. The arrows show the lens in the disk moving upward while the film passes downward. At the same time, by means of an eccentric pin on the main shaft a reciprocating frame adjacent to and in front of the film moves downward with the refractor rays as they strike the film and makes a distinct division line between each picture. Another device is provided at the top of the camera for indicating the number of feet of film that are used. Mr. Bianchi,

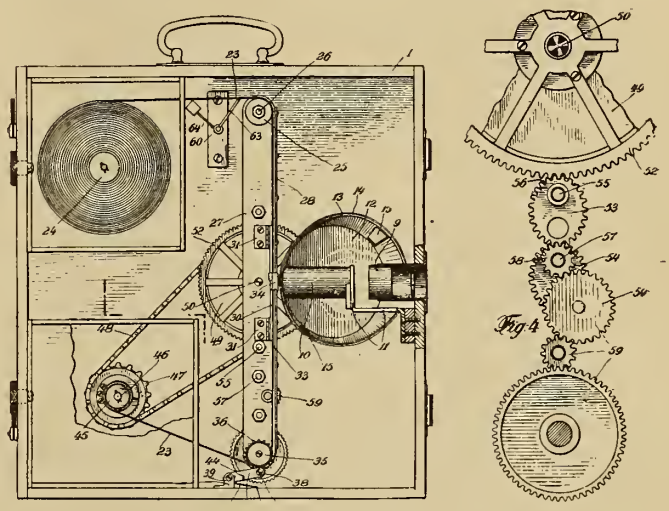

Diagram of the Meredith-Jones Camera.

in explaining the operations of the camera, stated that he was able to secure good motion effects with eight impressions to the second on the moving film in place of sixteen, as usually required on cameras of the intermittent character. Positive strips made from the negative films are passed through any usual moving picture projector with the stop interval between the pictures, and are claimed to be more steady, with less lateral displacement than is generally noticeable in films of the ordinary type. The camera is also very light to carry and is convenient to operate.

The patents on the Bianchi camera are controlled by the Columbia Phonograph Company. It is said to be unsatisfactory for outside work in its present form, owing to its sensitiveness to vibration. It has been used in studio work by providing a substantial and solid base for its operation.

THE MAPES-JONES CAMERA

Most cameras at present in use either involve the use of a film moving at a constant speed with the moving mirror or prism to cause the image to move at the same speed as the film, or the film itself is moved intermittently and stops for each picture to be taken. Mr. Hulbert Meredith-Jones does not find it necessary to make use of a mirror or prism for projecting an image upon the moving strip of film, but has discovered that effective pictures may be made while the film is moving. In the operation of the improved apparatus, the handle is turned, resulting in the constant moving of the film at a variable speed through the agency of a sprocket whose teeth engage holes in the edge of the film. The nature of the gearing between the handle and the sprocket is such as to cause the film to move somewhat slowly while the picture is being taken and then to move much more rapidly dur-

ing the interval before the taking of the next succeeding pucture. During this constant feeding process a rotary shutter is also constantly rotated, the apertures of the shutter being adapted to register with the film window while the film is moving as its slow rate of motion whereby the image from the lens is projected directly upon the lens while at its slow rate of motion. The exposure necessarily is short, occupying, as the drawings indicate, possibly one-tenth of the total picture interval. The advantages claimed are that there is less liability to fracture the film upon the sprocket and that great uniformity in the pictures is produced. The illustrations herewith show the gearing, and a general interior view of the new camera. One-half of the patent is assigned to Charles M. Mapes, of New York, N. Y.

Collier Argues for School Pictures

Motion pictures have made us a nation of theater goers, says John Collier, educational secretary of the National Board of Censorship, through the Survey Press Bureau. They carry the beauties of the stage into millions of lives hitherto untouched by dramatic art. They appeal to practically all social classes and to old and young alike.

There are about 10,000 motion picture shows in the United States, with a daily atendance of not less than 4,000,000, of whom probably 400,000 are school children. The estimated audience at all American theaters other than moving-picture houses is 750,000 a day, and the proportion of children is small.

Motion pictures will be used for many purposes in the schools. From the beginning, educational films have been displayed in the commercial theaters. The National Board of Censorship in twelve months inspected 3,000 reels (a reel provides a fifteen-minute show). Of these 400 were catalogued as "educational."

There exists a great range of geographical, industrial and historical reels, already available. The anti-tuberculosis crusade, the pure milk and anti-typhoid campaigns and similar public reforms have been dramatized in the motion pictures. These have been exhibited in the regular picture theaters of the country and 10,000,000 people have seen them.

The school will use the motion picture because it is graphic and dramatic. The text-book illustrations and the stereopticon now provide a graphic element in the curriculum, but the moving picture improves on the stereopticon in every way, even in artistic color effects. The growth of a plant from seed to harvest is shown in a ten-minute space on the screen, not with gaps and halts, but in a continuous process amazing to behold. The almost infinitely swift motion of an insect's wing has been dissected by pictures taken at the rate of 2,000 a second. These can be thrown on the screen at any desired speed. Actual color photography is now a commercial reality in motion pictures.

But motion pictures are not only graphic, they are dramatic. Too much passive instruction weakens the will of a child. The motion picture, when it presents a dramatic theme, impels the child away from a merely receptive and into an active mood. Of course, the school must provide an outlet for the active state awakened. Otherwise the excitement might merely result in nervousness and mischief-making.

"Education through doing the thing, not merely studying it," is a watchword of pedagogical reform, and the school which believes this will find a great use for motion pictures. Eye-strain from the flicker and calcium glare can be overcome by any skillful operator and by a careful selection of the pictures displayed.

Motion pictures can help to make the school useful to the family of the child and to the community. The school must no longer be a mere child-teaching machine, but a center for the family and the community. Motion pictures apeal to the whole family, and combine amusement with education. They attract people who do not go to the evening lecture centers, the church or the social settlement. These people pay for admission; they come habitually, and they live intensely and far more broadly during the motion-picture hour than during any other part of their day.

Commerce has got the better of philanthropy and of municipal good-will in helping the wage-earning millions to use their leisure constructively and pleasurably. Has not the time come when the school, endowed with a conscious public idea, should be expected to equip itself with that powerful magnet, the motion picture, which has given to the commercial showhouse its great advantage?

As yet, in America, neither the demand nor the supply for educational motion pictures has been effectively organized. One or two measures are necessary before motion pictures can be widely used in the schools. A film exchange might be established, dealing exclusively with educational institutions and fitting itself to meet their peculiar needs. Such a circulating library of educational films would be a success on purely business lines. Also a sufficiently large system of schools could afford to purchase its films outright and to use them in rotation, thus gradually building up a permanent library.

The likelihood that all well-equipped schools will soon use motion pictures does not threaten the life of the commercial theater. The great public patronizes drama for enjoyment rather than instruction. The school will always be limited in the purely amusing element it can provide, and here the theater will retain its place. The school center which will combine motion pictures with other attractions, such as the dance, the gymnasium, the amateur theatrical, will menace the prosperity of the commercial showhouse, just as it will menace the prosperity of the questionable dance hall or poolroom.

The development of the school on such lines as these will force all places of commercial amusement to improve enormously or go out of business. The extensive use of motion pictures by the schools will elevate the character of films shown in the theaters. If the school meets the responsibility here described, the places of cheap entertainment will all be vastly different, morally and artistically, ten years from now. It is by constructive competition, much more than by restrictive legal measures, that the amusements of the people are going to be improved.

Picture Shows Endorsed

"On the whole, the moving picture shows are wholesome if not taken in too big doses," said Dr. Mary B. Martin, protection officer of the Seattle, Wash., Y. W. C. A., speaking at the "Child Life" session of the civic institute at the Y. M. C. A. on "Amusements, Cheap Theaters and Penny Pictures."

"The character of the moving picture shows has materially changed in the past six months for the better. This is due largely to the censorship in New York City."

Some Questions Answered

By William T. Braun

In this department, answers will be given to questions upon any subject in connection with the conduct of moving picture exhibitions, the operation or construction of moving picture machines, the making of pictures or films, or any questions pertaining to the amusement business which can be answered without specific reference to any person or company. Questions are invited, and will be answered as promptly and as fully as possible.

CLEANING THE MACHINE.

Please give me a few directions on the best way to clean a motion picture machine. We purchased a second hand standard make recently and it needs cleaning badly. Also the best way to keep it in first class condition.—F. S. V.

THERE is no doubt that in order to give the best service your machine must be in first-class condition. What it needs is thorough overhauling.

Taking the machine head first, remove all parts which can be taken off easily, such as the film gate, various film guards, projection and stereopticon lenses, etc. Wipe all grime, dirt, etc., from the outer parts of the head with a soft cloth, getting into all the spaces. Use a cloth that does not lint, otherwise some of the threads will be caught in the bearings. If a gummy oil has been used for lubrication and a residue remains, this can be easily remove with gasoline.

The bearings, gears, and other transmission devices can also be cleaned by flooding them with gasoline. Run the machine slowly and apply with an ordinary oil can. Residue from the film, especially if you have first run, collects on the film sprockets. These can be cleaned with a small stiff brush. The flat tension springs on the film gate may be cleaned with a brush or small piece of wood. After they are cleaned, a little tallow should be applied lightly over them so that the film will slide past easily. The track or aperture plate on which the film rests must be thoroughly cleaned, otherwise the film is liable to become scratched, making the picture full of "rain." The aperture or hole through which the picture is projected should be carefully cleaned before running each film. Grease, dust, and other particles are carried down by the film and deposited around the opening, especially if there is a ridge around it. The best way to clean this is to run one finger around the opening. If this is done every time a new reel is put in the machine the operator will soon do it unconsciously, not taking any more time than if the dirt still remained and nothing looks worse than a picture with fringes around the edge. A small particle on the edge of the aperture is magnified many times on the screen. This may seem a small matter but I have seen pictures with fringes at the top in some of the best houses in the city.

The small tubes which convey the oil from the outside of the machine to the bearings should be flushed with gasoline, as more or less of oil and grime collects in them, stopping them up.

In many of the machines in use at the present time the intermittent mechanism is enclosed in a dust-proof iron box which is half filled with lubricating oil. If your machine is of the above type open this box only once in a great while to renew the oil or parts as no dust can get in, and it is better not to monkey too much with it. If the star and pin wheel are exposed they should be cleaned frequently and well lubricated.

Full directions for the cleaning of lenses were given in the last number. (See answer to Ed. V., page 79.) These, especially the condenser lenses, should be cleaned daily.

There is no set rule as to how often the machine should be cleaned; some parts require it daily. This can be left to your own judgment. All machines have oil holes on the outside case to which tubes are connected leading to the various bearings inside which cannot be readily reached from without. They are generally marked "Oil." Drop your oil through these tubes and do not attempt to flood them with oil from the outside. Use the oil sparingly as an excess will only drop where it is not wanted—on the films for instance. Sprockets and idlers have oil holes in their bearings through which they may be oiled. Never use but a drop or two of oil at a time as that is plenty if they are oiled daily.

Use none but the best grade of sperm oil. A mixture of graphite and vaseline may be applied sparingly to the gear teeth for lubrication.

The lamp house should be cleaned out at least once a week. Remove the lamp and brush the screen covering the vent holes with a stiff brush to remove any dirt or carbon ash that may have become lodged there. If dirt is allowed to collect on the screens the heat cannot leave the lamp house, and you are in danger of breaking the condenser lens. Now clean out the bottom of the lamp house and replace the arc lamp. The rack and various gears and spindles for adjusting the lamp should be taken apart and thoroughly cleaned and a small quantity of vaseline applied. Also some should be applied to the sliding rods so that the lamp house will slide over easily.

I might also mention here that the mica bushings between the lamp body and the carbon fingers be examined to see if they are in first-class condition, otherwise your lamp will not be insulated from the carbons. The binding posts on the carbon fingers and the lugs on the ends of the lead wires should also be kept clean so that good connection can be had. The inside of the carbon arms should be cleaned and all ridges removed with a file so that good contact with the carbons will be made.

If you get your machine in first-class condition and keep it that way you will be repaid many times in the operation of it and absence of repair bills.

INSULATION IN THE LAMP HOUSE.

Wherever I touch the lamphouse on my machine I get a small shock. Will you tell me how to overcome this?—J. Q. A.

IF YOU get a shock or jolt when you touch the lamp house it means that the bare wires touch the lamp or lamphouse in some place, or that the insulation between the lamp body and carbon fingers is worn out.

The first thing is to examine the mica insulations between the fingers or carbon holders and the body of the lamp. If these are worn out or broken remove them and put new ones in their places. Be sure that you get all the insulation on that is necessary so that there is no metallic contact between the arms and body of the lamp.

Next examine your lead wires, those which run

from the switch to lamp house. The asbestos insulation on these must be perfect. Where these wires enter the lamp house there should be porcelain bushings so that the side wall of the lamp house will not cut the asbestos covering. In connecting the lead wires to the lamp care must be taken that too much of the asbestos covering is not scraped off, causing the bare wire to touch the body of the lamp

After you have attended to the above points it would be a good idea to ground your machine. Solder a piece of insulated copper wire to the plate under the lamp house and another one to some part of the machine head. Connect these two wires together and run them to a water or soil pipe, attaching them firmly.

If all these are attended to you will not experience any more shocks.

Lincoln J. Carter "Back to the Mines"

A Detroit newspaper reports that Lincoln J. Carter, the king of the old-time writers and producers of melodrama, and Lou Houseman, whose name is known wherever pugilism is mentioned, were in Detroit recently with two friends for the purpose of acquiring a site on which they intend erecting a big plant for the making of moving pictures.

It will be one of the largest enterprises of the kind in existence. The company will employ a full stock company for the production of plays, and will make a specialty of having enacted before the camera the best plays presented by the greatest dramatic stars.

"There are hundreds of cities in the country which do not see stars like Sothern and Marlowe, John Drew and the other leaders of the stage. The best they get is a No. 2 or 3 company in an ordinary play. Our idea is to put the best plays by the best actors on films and have them advertised as a big feature in those cities," said Mr. Houseman, explaining the plans of the party.

"We chose Detroit for the enterprise because it is centrally located, because it is on the water, ideally located for the production of marine films of all sorts, and because it is a good business city. We have a site in view on the east side, opposite Belle Isle."

Mr. Houseman, in addition to being a fight promoter, has been in the moving picture business since 1887, when the first pictures were taken at Carson City of the fight between Corbett and Fitzsimmons.

Lincoln J. Carter is known to every one who ever attended a temple of melodrama. Some of his productions, which he wrote, staged and managed, much to the enlargement of his bank account, are "The Fast Mail," "Chattanooga," "Under the Dome," "Remember the Maine," "Heart of Chicago," "Too Proud to Beg" and "Shadows of the Past." There are a score of others.

"I haven't been doing anything with melodrama for two or thre years," he said. "There is no money in it any more. It has been killed. When Al H. Woods and other producers of stuff very near the edge of decency began putting their shows into those houses, and when the moving picture business had developed to considerable proportions there was no use staying in that business any longer. The theaters had been family houses and when that character was destroyed they had no reason for existing any longer.

"The moving picture business up to this time hasn't really gotten down to brass tacks. Most of the companies will now pay only $30 or $40 for a scenario and that doesn't pay. People aren't going to continue forever to be amused by some one chasing a yellow dog up an alley. They will demand better stuff. Then the magazine writers will get into the business and they will be paid money for their ideas. Later the companies will have to hire skilled dramatic authors to write their stuff. It's got to come."

The other men in company with Houseman and Carter are Otto Melchers and R. C. Robinson, of New York.

School Needs Shown by Motion Pictures

The needs of the State Normal School at Kirksville, Mo., will be shown to the state legislature this winter by means of pictures, lantern slides and motion pictures, according to President John R. Kirk. The idea is not a new one by any means, as President Kirk gave a stereopticon lecture before the appropriation committee of the legislature at Jefferson City two years ago. He was assisted by Prof. W. A. Lewis, at that time head of the department of chemistry.

Professor Lewis was made head of the Department of Agricuture at the State Normal School recently and doubtless the series of pictures shown the appropriation committee and the members of the legislature this year will have more of a farm flavor than those at the preceding session.

President Kirk and Professor Lewis propose to make a series of motion pictures, illustrating student activities on the 100-acre state farm and on the garden of the model school, where the boys and girls from the farms are shown how to cultivate vegetables and flowers. The motion pictures will likewise illustrate the manner in which the big covered wagon gathers up about two dozen children each morning at the farm homes, situated from two to six miles from town, and brings them to this model rural school for daily instruction, returning them to their homes before dark each afternoon.

A very practical turn given to the use of the magic lantern is that made by Professor Lewis under the direction of the Adair County Agricultural Society, which has sent the normal school man with his lantern to practically every town, hamlet and school district in Adair county this fall. Mr. Lewis shows pictures of the county's big mules, fine horses, cows and sheep and bumper crops and farm homes.

An innovation in reproducing the scenes of a play for posterity was inaugurated recently at a special rehearsal of "Trelawney of the Wells" at the Knickerbocker Theater, in New York City. The play, with Ethel Barrymore and the regular company in the cast, was produced with a phonograph recording the voices of the actors and a moving picture machine receiving on its films the action of the play. It is proposed to put the records and films away for future generations. Charles Frohman intends to record all of his important productions in the same way.

It is pointed out that the recent and future generations have lost much in not being able to have some idea of the work of Booth, Irving and other famous actors. This loss, it is felt, will be somewhat overcome by recording the plays of today and those of tomorrow on the phonograph and moving picture films.

Montana Supreme Court on Sunday Shows

By K. S. Hover

NOVEMBER 15, 1910, The Nickelodeon reported in brief a decision of the Supreme Court of the state of Montana, reversing the judgment of the district court of Missoula County in the case of the State vs. T. C. Penny. Mr. Penny was convicted and fined by the lower court of keeping his picture theater open on Sunday, and the higher court dismissed the complaint. The decision is of such interest and importance that it is here given in full. Decision was rendered by Judge J. Smith, Judge J. Holloway concurring.

The defendant was convicted and fined in Missoula county for keeping open and maintaining a theater on Sunday, contrary to the provisions of section 8369 of the Revised Codes. That section reads as follows: "Every person who on Sunday, or the first day of the week, keeps open or maintains or aids in opening or maintaining any theater, playhouse, dance house, race track, gambling house, concert saloon or variety hall is guilty of a misdemeanor."

The cause was submitted to the district court upon an agreed statement of facts, which reads as follows:

That T. C. Penny, the defendant hereinabove named is now and at all the times hereinafter mentioned as the manager and proprietor of the Bijou in the city and county of Missoula, state of Montana; that the Bijou is a moving picture show maintained, operated, and conducted at said city and county of Missoula at 110 West Main street, and on Sunday, the 24th day of October, 1909, the defendant opened the said Bijou moving picture show and maintained the said picture show and continued to operate the same until he was arrested by the sheriff of Missoula county, Montana; that at the time of his said arrest the defendant was engaged in giving a moving picture exhibition, accompanying the same by piano music and a vocal solo; said moving picture exhibition consisted in throwing upon a screen at the front of the room, and in front of and in full view of the audience in the room, moving pictures by means of the operation of a machine which is known as a kinetoscope; that said room just referred to is and was located in the Bijou; that the said moving pictures are thrown upon the screen by reason of the running of films of pictures through the kinetoscope; that on the aforesaid date there was by the said defendant, by and through one of his employes, run through the said kinetoscope four sets of films, throwing the pictures contained in said films on the screen hereinbefore referred to and thereby making the moving pictures, the exhibition of which is complained of by the criminal authorities of Missoula county, as constituting together with the piano music and vocal solo then and there rendered, together with the others facts herein agreed upon, the opening and maintaining of a theater on Sunday; the names of the four sets of films of moving pictures which were run and are above referred to are as follows, to wit: Samson and Goliath, which depicted on the screen what is known as a sacred scene; A New Life, which pictured what is known as a moral scene; Fools of Fate, which pictured what is known as a moral scene; and It's an Ill Wind that Blows Nobody Some Good, which pictured on the screen a comical scene.

That throughout at least a portion of the time that the said moving pictures were being exhibited as aforesaid, one of the employes of the defendant played the piano and furnished instrumental music to accompany the exhibition of the said pictures; that at one period intervening between the exhibition of two of the above-named films of pictures one of the employes of defendant sang a vocal solo, accompanied by music on the piano, being played by another of the employes of the said defendant, which said solo was entitled "The Songs My Mother Used to Sing."

That tickets were sold admitting people to the Bijou on said Sunday evening and at the time of defendant's arrest there were at least 100 people congregated and seated inside the Bijou watching the said pictures and listening to the said music; that the price of admission charged was the sum of 10 cents.

That the pictures shown at said time and place were all of a clean and moral character; that all of the pictures shown by the Bijou are and were prior to being exhibited passed upon by what is known and called a "Bureau of Censorship," composed of five persons located in New York City; that said bureau passes on each picture in each film run by the Bijou before the said film is permitted to be run; and any unclean or immoral picture the said bureau requires to be removed from said film at once and before it is permitted to be run.

That the defendant is being prosecuted under the provisions of section 8369 of the Revised Codes of 1907 of the state of Montana; that at the time of the enactment of said section moving pictures and moving picture machines were not in existence and were not known of; that there was an exhibition in front of the Bijou for a period of about two hours about noon of the 24th of October, 1909, and there has been exhibited thereat on four or five other occasions prior thereto for a short period, an advertising board about three feet high and about four feet wide, having by means of canvas and painting on said canvas, printed thereon the letters and words "Bijou Theater," and some other advertising matter.

That the defendant pays to the city of Missoula, Mont., money for a license granted by said city under an ordinance of said city requiring licenses to be secured for the operation of theaters; that said city of Missoula has and had no ordinance requiring or providing for licenses to be granted to moving picture shows, and that there was no ordinance on the Ordinance Books of the city of Missoula on the 24th day of October, 1909, permitting or authorizing any person to secure a license for the operation of a moving picture exhibition or moving picture show.

That the defendant on one occasion permitted an advertisement to be run and placed with his consent on an oilcloth banner about eight inches wide by eighteen inches long, the heading for which said banner was "Missoula's Leading Business Men"; the advertisement of defendant, which appeared among many others, was in part as follows, to wit: "Come to the Bijou Theater and see the best entertainment in the city." Charles Harnois is the proprietor of the Harnois Theater, sometimes called the Harnois Opera House. In an edition of the Daily Missoulian, a daily newspaper published in the city and county of Missoula, of about September 12, 1909, said Charles Harnois advertised that he was the proprietor of and had the only theater in Missoula. Said Harnois has been in the theater business for more than fifteen years.

That the Bijou is by some regarded and spoken of as "the ten-cent show," and as the "Bijou"; that among some it is regarded and spoken of as "the ten-cent theater" and as the "Bijou Theater"; that in the building which is occupied by the Bijou, referring particularly to the room where the exhibition is made, there are a number of seats and there are two aisles; the floor has a moderate descent as it nears the front portion of the room where the screen is, so that those in the rear can observe the exhibition as well as those in front without inconvenience; that there is an elevation in the floor of from 2 to 2½ feet forming a platform where the screen is; that the curtain which forms the screen on which the pictures are thrown reaches from the ceiling to the floor of the platform and is immovable; there are no boxes; there is no balcony or gallery; there is an elevation in the rear where the kinetoscope stands.

That in the columns of each of the two daily newspapers in the city of Missoula there is maintained a column headed "In the Theaters,' and the "Bijou" and the attractions thereat are usually mentioned in said columns. Sometimes the "Bijou" is called the "Bijou Moving Picture Show."

Defendant appeals from the judgment and also from an order of the court refusing to grant a new trial.

The sole question of determination is, whether

the agreed statement of facts is sufficient to warrant the conclusion that the defendant was guilty of keeping open and maintaining a theater, contrary to the provisions of Section 8369, Revised Codes, supra. In so far as this statute is penal in character, it is to be construed in accordance with the provisions of section 8096 of the Revised Codes, which reads as follows: "The rule of the common law, that penal statutes are to be strictly construed, has no application to this Code. All its provisions are to be construed according to the fair import of their terms, with a view to effect its object and promote justice."

1. The attorney general's first contention is that the word "theater" in the statute, refers to the building, and he cites the following definitions of the word, viz.: "Any room adapted to the exhibition of any performance before an assembly, as for public lectures, for scholastic exercises, for anatomical demonstrations or surgical operations before a class, and like purposes." (Webster's Dictionary.) "A building especially adapted to dramatic, operatic, or spectacular representations; a playhouse, a room or hall arranged with seats that rise as they recede from a platform at one side, especially adapted to lectures, to the exhibition to classes of anatomical or surgical demonstrations," etc. (Standard Dictionary.) "A theater is defined to be a building appropriated to the representation of dramatic spectacles, a place for shows, a playhouse." Commonwealth v. Fox, 10 Phila. (Pa.) 204.

We are, however, satisfied that our statute was not intended to apply to the act of keeping open or maintaining the building called a "theater," but refers rather to the class of entertainment therein, or in some other manner, furnished. It is not to be supposed that the legislature intended to prohibit the mere opening of a theater building at a time when no performance of any kind was being given. There is no reason that we can think of why such an act should be prohibited or punished. The opening of an empty theater building on Sunday would in no wise affect either the public morals or the good order of a community. This being so, it follows that those portions of the agreed statement of facts wherein a description of the physical condition and equipment of the so-called "Bijou" theater, or moving picture show is set forth, are immaterial.

2. The only other question is: Does the operation of a moving picture show on Sunday violate the statute prohibiting the opening or maintaining of a theater on Sunday? The mere fact that the show was sometimes called a "theater" is of no consequence, in view of the further fact that we have before us a particular description of the class of entertainment furnished. If the show was a theatrical performance, the statute would be violated if it were maintained in a place other than a theater building, as, for instance, in the open air. If the giving of a moving picture show was in terms prohibited by the statute, the courts would be bound by the words employed and there would be no occasion to construe the legislative language. As this form of entertainment is not mentioned, on account of the fact, probably, that shows of the kind were unknown and unthought of at the time the law was enacted, it is the duty of the court in seeking the legislative meaning, to first ascertain the reason for the enactment of the law. If the giving of a moving picture show falls fairly within the class of evils sought to be suppressed, then the act is prohibited whether such a show is mentioned in the law or not. See John v. Northern Pacific Ry. Co. (just decided) 111 Pac. 632.

The law certainly prohibits the giving of a theatrical performance, as such. Therefore that feature of it may not be questioned. Doubtless the legislative assembly considered that such a show ought not to be permitted on Sunday. But we must seek the reason for such a conclusion in order to ascertain whether a show not specifically mentioned is also prohibited. These and similar laws are passed in the exercise of the police power of the state. They are presumed to be reasonable as enacted. We take the following from 31 Cyc. p. 902: "Police power, strictly speaking, a term which has relation to a power of organization of a system of regulations tending to the health, order, convenience, and comfort of the inhabitants, and to the prevention and punishment of injuries and offenses to the public."

It is undoubtedly by virtue of the police power that theater performances on Sunday are prohibited. They are not mala in se. Such performances cannot affect the health, convenience, or comfort of the inhabitants, unless they are so boisterous in their nature as to be a disturbing element; therefore it must be that they are prohibited for the purpose of preserving the peace, order, and good morals of the community. The chapter in which section 8369, Revised Codes, is found, is entitled: "Offenses against Good Morals." It may perhaps be admitted that the Legislature has power to prohibit the exhibition of all moving pictures, or pictures of a particular description, on Sunday, or demoralizing scenes on any other day; but as it has not in terms done so, such a show is not prohibited, unless it falls within that class of entertainment which tends to disturb the peace, quiet, good order, or morals of a community.

The statement of facts discloses that the pictures shown at the time and place mentioned in the complaint, were all of a clean and moral character and had been approved by a so-called "board of censorship," which had the power to prohibit and did prohibit the exhibition of any unclean or immoral scene or picture; the moving pictures were accompanied by piano music, and, as a part of the performance, a vocal solo of a sentimental nature, accompanied by music on the piano, was sung. We cannot perceive how this sort of an entertainment could possibly affect either the morals or the good order of the city of Missoula or its inhabitants. It appears to us to have been an innocent amusement having a tendency to instruct, rather than to demoralize or disturb; and as the Legislature has not seen fit to prohibit it, the courts ought not to do so. Ex parte Hull (Idaho) 110 Pac. 256.

In the case of Moore v. Owen, 58 Misc. Rep. 332, 109 N. Y. Supp. 585, the court held that a moving picture exhibition was a "show" within the meaning of a statute prohibiting shows on the first day of the week. See Economopoulos v. Bingham (Sup.) 109 N. Y. Supp. 728. But our statute does not prohibit the opening or maintaining of a "show." It specifically mentions a "theater," which, as we have held, means a theatrical performance. While the word "show" may, and undoubtedly does, include a theatrical performance, the word "theater" is not sufficiently comprehensive to include all "shows."

The judgment and order of the district court are reversed and the cause is remanded, with instructions to dismiss the complaint. Reversed and remanded.

Recent Films Reviewed

The Convict's Last Chance.—Yankee. A sentimental and providential treatment of a grave social problem. The problem of the ex-convict is indeed a serious and distressing one, but such a treatment as this will never throw any light on the solution. The piece should be judged as drama, however, and not as a contribution to ethics, and as such proves effective, though indifferently convincing, owing to the far-fetched nature of the main coincidence. The scenes progress with a fair amount of circumstantiality and the acting is acceptable. The photography offers room for improvement. The same plot almost to a hair was seen in a Pathé release of about two months back.

An Englishman's Honor.—Selig. This plot would seem to be more suited to the novel form than the photoplay, being rambling and discursive with many ups and downs, and covering a long stretch of time. But it is interesting enough and quite well acted. The leading actress puts up a very good appearance as an English aristocrat, and the hero does well in a similar respect. A noteworthy feature of the production is the excellent costuming which showed style and expense, and bore none of that shoddy hand-me-down appearance often seen in photoplays even of the first rank. The hero gained his fortune by the trite old expedient of finding gold in the West; the circumstances are considerably freshened up in this case, however, so that the episode does not give one the accustomed pain. The story is well presented throughout with that thoroughness and capability that is usually associated with the Selig brand.

The Redskin's Secret.—Bison. The interest of this film lies in action—action pure and simple. There is an effort to introduce some emotionalism at the end, but it is too meagerly suggested to be effective. The action consists chiefly in attacks and counter-attacks on and by Indians, and being managed in vigorous and convincing manner stirs up considerable interest, and might stir more if the incidents were not so hackneyed. It is just a rehash of expedients that have grown gray in the service of Indian melodramas and ought really to be retired on a pension, having long since lost their virility. Even when presented in such good style as this they are impotent to stir thrills any longer. The photography is commendably clear and the acting something more than adequate.

For Love of an Enemy.—Kalem. An interesting war-time drama presented in a first-class and competent manner. The settings are good, the acting is good, and the drama mounts steadily and surely to its climax. There is a fine spirit of restraint in the scenes, an absence of the easy conventional tricks; the simple life-like episodes have not been elaborated with extraneous matter for sensational effect. When the climax comes it is all the more telling. One scene was a little stiff—the love-at-first-sight episode. People do not stand gazing deep into the eyes of strangers that way, even though pierced by Cupid's darts. The love-struck glances are shy and embarrassed, and in such moments people exert themselves with extra effort and fake up conversation in order to appear at ease. This long-drawn-out moonstruck manner of handling the occasion is purely conventional and is becoming irritatingly common in photoplays. The Kalem producer should have brought to bear on this scene a little of that reconstructive imagination which made the action in the spy's bedroom so real. This later scene disclosed a thorough-going bit of realism and held the audience in breathless attention. It is this tendency to really "do" things and do them right, that is bringing Kalem a rapidly growing fame.

A Water Contest.—Gaumont. Among the many sports of different nations this is surely one of the queerest. It is like the old custom of jousting where knights endeavored to dislodge each other from the backs of horses by riding together with lances tilted at each other's breasts. Here the steeds are row-boats with an elevated platform on which the "knights" take their stand and try to tip each other off into the water. It makes an interesting and exciting exhibition.

The Sealed Letter.—Gaumont. All the film makers, no matter who or where, should go and sit at the feet of Gaumont and learn photography. Gaumont is past master of the art and stands alone, a peak of perfection rising above little foot-hills of moderate success. To prove it, one needs only see this film with its clear, limpid, supremely artistic pictures. There is atmosphere and sunlight in them, and they are steady, almost without a flicker. One feels as if the screen were but a square hole through which one viewed reality. The photography is so fine that it almost detracts from the drama; one loses the plot while feasting one's eyes on the beauty of the pictures. With some Gaumont dramas this would occasion no great loss because Gaumont plots are not always as vital as they might be; but not so in the case of the "Sealed Letter," which is an interesting drama, simple and without thrills, but human and in one or two places quite touching. There was a real sob in the last scene with its simple genuine pathos. The dissolving vision was a fine bit of film manipulation. The actors realized the spirit of the story with simple and eloquent art.

Uncle's Birthday Gift.—Edison. It seems as if more hilarity might have been extracted from this rather fertile complication. The piece did not bring a volume of laughter commensurate with its possibilities. The one scene that "took" was that showing the passer-by who put up his umbrella to ward off a shower of falling plants. This little episode was played with much unction by the actor concerned and brought down the house. It was a purely extraneous episode having no direct relation to the plot. This same actor has pulled off several such episodes in recent Edison releases and is well worth his keep if he does nothing else. But the main action of the play is not so successful and would have created little merriment were it not for the farcical abilities of Bumptious who can make almost anything go. The one telling scene—the climax, where the uncle at last opens up the rubber plant—loses force because the interest is divided between the uncle, the messenger boy behind the screen, and the two distracted women, anyone of whom may "do" something, and consequently must be watched. It is a three-ringed circus effect, where in trying to watch all rings at once, one really sees none of them. One of these interests would better have been sacrificed, probably the messenger boy, and the spot-light centered on the two women, who really were in a tight predicament. The young lady might have fainted with good effect and been restored by the sight of the necklace. Or if the messenger boy remained, the business of feeding him money might have been handled more humorously. The film is interesting all the time, but it seems as if there still lay in the situation unmined comical possibilities that might have developed side-splitting results.

Funeral of Count Tolstoi.—Pathé. Certainly a unique and remarkable film, one that could never be taken in this country. Our sentiments would never allow a camera man to enter the chamber of death and motograph a famous man as he lay in his shroud. It would seem too much like desecration. Our sentiments may be foolish, but they would certainly rise up in arms against such a step. Perhaps it is equally contrary to the Russian practice, but that an exception was made in the case of Tolstoi because he so peculiarly belonged to the world and was a man who in life constantly rose above the petty conventional barriers that ordinarily stand between man and man. Probably no harm has been done by the experiment, though it is doubtful whether the film will evoke the greater amount of reverence or of mere sensational curiosity.

Love Under Difficulties.—Pathé. A brisk comedy, not very original, but amusing. The comedian overdid his gesticulations as usual, especially the facial ones. Somebody must have told this actor sometime that his face didn't look handsome in repose. The young lady is *chic* and seems to be gifted for ingenue roles. The denouement was worked up artfully and came as a pleasant and merry surprise.

Trailed by an Indian.—Pathé. A film that is remarkable for its brilliantly clear photography. Pictures of such gem-like brilliancy are not often seen upon the screen. Whether this is due to the California (?) atmosphere, or to clever manipulation of the photographic process is hard to say. Possibly it is due to both. If so, it is a rare combination. The play is a simple one, just a case of kidnap, pursuit, and recovery, without any contingent motives or complications. It is a form of chase and the interest is sustained by the thought, Will he get him? The scenes hold several thrills and please with their wild pictorial beauty.

His Master's Son.—Essanay. A fairly interesting film rather well acted by the leading man and his faithful servant. The hero didn't do much of anything to win our sympathy, but he was gifted with good looks and must have been a likeable fellow or so many people would not have worked so unselfishly to put him on his financial feet. The old darky's monetary sacrifice loses force because we see that that was not really what saved the young marsa's fortune; it was the intervention of the girl's father that did it. The old darky's sacrifice was touching and unselfish, but it wasn't all-sufficient. But what the film thereby loses of dramatic power is gained in plausibility: an illiterate darky could scarcely have turned the stock-market all alone. The broker's office scenes are quite convincing, the party scene fairly so; the wealthy broker's library seems rather cramped; the hero's quarters are good. The southern interior setting compasses an expressive effect in its disarray of packing, the audience gathering at once the condition of affairs. The old colonel certainly had a sudden death—too sudden for good dramatic effect. There should have been some kind of preparation. There are no thrills in the piece, but a few pleasant sentimental touches render it effective.

With Interest to Date.—Edison. A slow-moving piece lacking the kind of dramatic interest that is essential to the photoplay. The figures move to and fro but there is really no action—of the visual kind. There is plot enough, but it gives rise to situations that are in the main mental and non-visual. It is a conflict of schemes and ideas, and not warfare out in the open. The one dramatic scene—where the bogus emissary tricks the rival bidder—loses force because the hero himself is not the agent. He delegates the transaction to another man who has no personal interest in the matter, and who is, so far as we are concerned, a perfect lay figure. The scene arouses only a vague interest and no sympathy; vague interest because our comprehension of the scheme is slow in dawning. It is a labored plot, anyhow, not worthy of Rex Beach or any other good writer. It affords dull entertainment. There is inspiration neither in the action nor the acting. It is a long time since the Edison forces have moved so heavily. The photography is drab and dull.

Three Men and a Maid.—Vitagraph. A bright attractive comedy—one of the most engaging seen in some time. The situation is refined and highly effective, affording scope for an efficient quartet of actors to display their comedy abilities. They fairly sparkle and there are generous dashes of sentiment to sweeten the potion. There is not a suspicion of farce or slap-stick within a thousand miles, but we observed that the audience rippled with merriment free and unconstrained. Films like this nail that old lie about the necessity of slap-stick to "make 'em laugh." The settings are characterized by depth and richness, and the actors, every one of them, look their parts and put up a likeable appearance; so the eye is satisfied as well as the mind. The photography is something more than satisfactory, being sharp, clear and bright—really excellent. The present reviewer saw reason to object to Vitagraph photography some time ago, but can find cause to do so no longer. Vitagraph releases of the last month or so have been superior in that respect.

A Friendly Visit.—Itala. A wildly extravagant bit of humor that creates much amusement and some laughter. The film offers grounds for an interesting comparison between American and European methods of pantomime. The Europeans openly attempt to tell the story with their gestures and go to an extreme of descriptive gesticulation that would be highly appropriate in an institution of deaf-mutes. Our American actors keep more within the bounds of the natural and resort only to such gestures as might arise under conditions of real life. The latter method seems eminently more reasonable, but perhaps we are prejudiced, being American.

A New Kind of Armchair.—Itala. A familiar expedient is once more utilized herein—that one of throwing a furniture cover over someone and letting him impersonate a chair—and it creates the usual fun. A chase commenced and we began to feel the usual long-suffering pain, but the producers had sense enough to give it an ingenious twist and bring matters to a quick end, thus closing effectively on the point of highest mirth. It is the broadest kind of farce done in lively style.

Mike the Miser.—Edison. It was an excellent stage manager who handled these boys in the closing scene. The whole episode is just as natural as it can be and demonstrates conclusively that the person who managed it possessed a constructive imagination and knowledge of boy psychology in no mean degree. The self-consciousness of those kids in their mock ceremony was rich and tickled the audience through and through. The generosity and pathos and humankindness of the scene went straight to the heart. It is a touching little drama and decidedly novel. The hero was a manly little fellow remarkably free from camera-consciousness. In this respect he compared more than favorably with the unripe scamp who appeared in "Uncle's Birthday Gift."

The Tables Turned.—Pathé. Betty the tomboy once more on view. There is more plot than usual to her antics but it is not very edifying nor very funny. The final scene, showing the mother's return, had humorous possibilities which were left untouched.

Sea Birds in Their Haunts.—Pathé. A lecture ought to go with this film for it is vastly interesting. Audiences ought to know the amount of patience and pertinacity and enterprise that went into the making of it. A series of motion pictures showing how the film was taken would be more interesting than the film itself—which means very, very interesting. This is the kind of bird-hunting that appeals to our hearts. It is a much greater feat to shoot with a camera than a gun, requiring more skill and finer marksmanship, and the result is ever so much more worth while. The pictures are as good as could be expected photographically, and stir the liveliest interest when one holds in mind the conditions under which they were taken.

His Trust Fulfilled.—Biograph. An interesting and meritorious film, but in no wise so extraordinary as its precursor, "His Trust." Its issues are smaller and the heroic quality is absent. The predominant tone here is one of gentle pathos, whereas in the other it was high-wrought tragedy. The only scene of large significance is that showing the joy of the emancipated negroes—a very effective scene, by the way, in its relation to the drama, the faithful slave standing by and refusing to join the celebration, ever mindful of his trust. The mother's death is pathetic in its utter enfeeblement and desolation, and brings to a close the excellent performance of this actress as witnessed in both films. Throughout she made a profoundly impressive figure of tragic sorrow, and registers an unforgetable memory in the annals of the photoplay. Her able co-worker who played the part of the faithful servitor also rounded out a fine performance in this film and the final scene, where the white man honors himself by shaking the negro's hand is in the nature of an apotheosis. The two films form a subject of highest merit and do the Biograph company vast credit.

Cast Up by the Deep.—Vitagraph. A subject of considerable dignity and merit because it treats the sorrows and disappointments of life in a large and true way, without sentimentalism. There is the irony of fate in the last scene where the message almost reached its destination and then missed. The acting is excellent throughout, especially the scene of resignation where the girl sends her lover away. In scenes of deep, simple, straight-forward emotion this actress is right in her element. The only objection to the film is the slowness of the action. It drags considerably toward the end; there are too many shifts of scene from one disappointed lover to the other, without any progress or change in the man's circumstances. The photography is good and the settings appropriate.

Of Interest to the Trade

By L. F. Cook

New York Letter

Not long ago we had the pleasure of reading in one of the monthly magazines about some extremely interesting adventures that certain of our "cowboys" had in lassoing big game in Africa. The tale told of hardship, of narrow escapes from death, and of great excitement. And now word comes that these very scenes are to be shown upon the screen.

A Colonel James, familiarly known through a greater portion of our West as Buffalo Jones, was head of the expedition, which was conceived on account of Colonel Jones' success in lassoing wild animals out West. There were with him two cowboys, Mearns and Lovelace. The party of course took on the aspect of a tropical hunting safari as soon as it reached Africa, but the method of capture was by the lasso wherever possible.

Photographer Cherry Kearton took along his moving picture cameras too, and the pictures he got were thrilling indeed. Rhinosceros and lions were actually captured by lasso and Kearton took the pictures; which latter operation was often nearly if not actually as dangerous as the former.

These films, known as "Lassoing Wild Animals," are to be a special release of the licensed manufacturers. The pictures, which are two thousand feet in length, will be released February 12. They literally teem with exciting episodes.

Perhaps the most unusual film of the independents for the week is "The Trunk Mystery," released by the Great Northern. The plot borders on the melodramatic, perhaps, but then all really good detective stories must do this. Photographically and from the acting standpoint the whole film is very good indeed.

The efforts of Pathe Freres to make "Il Trovatore" a masterpiece of pictures has met with unusual success. The rearranging of Verdi's music to fit the films was an unqualified success and reflects credit on the firm.

New York thought that it had made a permanent gain when Carl Laemmle moved to this burg, but for some reason Laemmle can't overcome that desire for a glimpse of Lake Michigan. The longing became too strong to resist, so Laemmle was put aboard of the Twentieth Century for Chicago.

Hoagland of Pathe was mingling with the high brows at Washington recently. It is rumored that since his return he is growing stouter, in emulation of Taft we presume.

Recently we spoke a few words about the picture theaters advertising in the daily papers here. Now there is another theater that deserves commendation. This particular house is "The Photoplay" on Sixth avenue near Thirty-second street. We were hustling along Thirty-second street the other night when we saw a big sign on a building advertising "The Photoplay." This is the first attempt to do any advertising of this sort that we have seen, and this column wishes to congratulate the management of the house. One way to make the public appreciate the beauties of motography is to advertise and get that public into the moving picture houses.

An important addition to the independent ranks is that of the Rex Motion Picture Company. This company starts with a most excellent prospect of success. To begin with there is Edwin S. Porter as one of the partners. Also a real up-to-date studio and manufacturing plant, spacious, new and completely equipped to make the best sort of pictures. All of the individuals comprising this new company are men of much experience in the picture game, understand its limitations; and having this experience and knowledge to draw from are not liable to make many serious mistakes.

New Edison Traveling Representatives

Bernard M. Corbett, formerly business agent for the Motion Picture Machine Operators' Union of Boston, Mass., has been added to the roster of Edison traveling representatives, with all of the New England states as his territory. Mr. Corbett's itinerary started at Boston, from which point he has been working with success throughout the entire state, giving demonstrations of the Model "B" with inside and outside revolving shutters.

Mr. Corbett is a practical operator, who has had experience with all types of projecting machines, and is therefore well qualified to demonstrate and explain the points of superiority claimed by the Edison people for their Kinetoscope, as well as to offer advice on all matters relating to projection; for both of which reasons exhibitors and operators along the route of his itinerary will find plenty to interest them if they attend the demonstrations he will give in every city he visits.

August A. Busch, vice-president of the Anheuser-Busch Brewing Company, is building a handsome motion picture theater in St. Louis, for which two Edison Model "B" machines are being supplied by the General Film Company, Kansas City, Mo., which is also installing a Model "B" in the new Lyric, one of the finest theaters used exclusively for motion pictures in St. Louis.

An Edison Model "B" was recently installed by the Howard Moving Picture Company, Boston, Mass., in the Post Exchange, Marine Officers' School, Port Royal, S. C., where it will be utilized for purposes of education as well as entertainment.

F. H. Stewart, southern traveling representative of the Edison Company, recently installed an Edison Model "B" in the Hampton Normal and Agricultural Institute, Hampton, Va., for use along educational lines. The Hampton Institute, as is pretty well known, is one of the largest educational institutions devoted to the advancement of the industrial arts in the country. It has an enrollment of 1,400 students.

The Edison Company is preparing a special "Lincoln Day" subject which is built around one of the most delightfully human as well as pathetic chapters in the life of the great war president—his love for his son "Tad," whose early loss, it is said, cast a gloom

over Lincoln's subsequent career. The characterizations of the famous president and his son are said to be extremely well conceived and the drama in other respects adequately handled. It should be a winning film for every theater on Lincoln Day.

"The Rajah," from the well known play by William Young is slated for release on February 14.

"The Ransom of Red Chief," by O. Henry, announced as one of the most delightful comedies that has ever left the Edison studio, will be released February 15.

The Edison people are announcing a new lobby display frame containing photos of the popular Edison stock players—William Bechtel, Herbert Prior, Charles Ogle, Laura Sawyer, Mabelle Trunelle, John R. Cumpson, William West, Charles Seay, Mark McDermott and Mary Fuller—in three new designs. The photos are artistic sepia prints and the frames original in design and made of highly finished wood. An artistic lobby display frame is a dignified ornament in any lobby or foyer and a splendid ad for a theater as well. Miss Mary Fuller has become a member of the Edison stock company, succeeding Edward Boulden. Miss Fuller is considered one of the most versatile and accomplished of motion picture actresses and will prove an invaluable addition to the Edison forces.

Vitagraph Films in Manila

The following extract from the Manila, P. I., *Times* for November 21, 1910, shows how well one of the recent Vitagraph subjects was received in that far-off possession of our country:

Never has there been exhibited in Manila a film that has caused more admiration than that which represents the "Life of Moses" presented by the Majestic theater during the past week. During the trials that were being made of this film it was said that the Filipinos would not understand the transcendancy of the history that it represents, that their education in religious matters was not sufficient for them to fully appreciate the life of the prophet, and in particular, of the great legislator of the people of Israel. The exhibition was given with little hope; but the result failed to justify these suspicions. Thousands and thousands of persons hastened to see it, following attentively the development of the whole history of the life of Moses. The English explanations were not obstacles to their understanding it as was shown by the translation that each made of every step in the story in Spanish, Tagalog, and other dialects, as the film was unwound. Many were not content with seeing it only once but went several times, and the news of such a magnificent exhibition spread so fast that it was impossible to admit so many people even in a theater as large as the "Majestic." Thousands of persons had to return home after much waiting.

At the request of the press and of the thousands of persons that were not able to see this film it was exhibited another week.

Another Rumor Killed

A story has been going the rounds of the press to the effect that the Pennsylvania Railroad Company was about to install a picture theater in the Pittsburg Union Station. The following letter, signed by James P. Anderson, district passenger agent at Pittsburg, disposes of the rumor:

Editor The Nickelodeon:—

Replying to your favor of 16th inst., relative to a moving-picture theater being installed in Union Station, Pittsburgh; I beg to advise you that there is nothing whatever in this rumor.

An Alamo Picture Coming

The Melies Star Company is now busily engaged in reproducing "The Siege of the Alamo," and every scene will be taken at the actual spot where it took place. All the data relating to this siege has been obtained from direct descendants of the illustrious warriors who sacrificed their lives in fighting for their country during this siege. These native Texans, who are thoroughly imbued with the intense patriotism with which their forefathers were inspired, have entered into this remarkable work of the Melies company and are extending every help and giving their most eager interest and assistance in reconstructing this great historical event. Everywhere the company has been supplied with information and documents which will make this series of historical events unique in the annals of moving picture photography. The company has covered the ground most thoroughly to the Mexican border, and has lived over again the experiences of those who fought for the freedom of the Lone Star state.

The Melies company is in full working equipment at San Antonio, and has set up a complete new factory to develop negatives and make first prints and project them on the screen for examination before the negatives are sent to New York to have duplicates made therefrom. This gives an advantage in rejecting any scenes which do not meet approval and enable them to be taken over again without any delay or hesitation.

A Ballad of Educational Pictures

The following song of the scientific film appears in the latest bulletin issued by Secretary Snow of the California State Board of Health:

No more we'll seek the picture shows
To drive away dull care,
To see how Casey led the goat
Or watch the county fair;
No more upon the screen we'll see
How Wilbur Wright can fly;
We'd rather watch the ptomaines jump
And see the germs waltz by.
No more we'll seek the far North Pole
With Peary or with Cook,
Or scour the plains with Bronco Bill—
We'll watch the hook-worm hook;
We'll no more laugh to see portrayed
The pranks of little Willie;
We'll watch the microbe do its stunts
And cheer the new bacilli.

Cromelin Resigns Presidency of A. I. F. M.

Paul H. Cromelin has resigned the presidency of the Associated Independent Film Manufacturers. This body was founded last summer in opposition to the Sales Company. It embraced the manufacturers of the following films: Nestor, Eclair, Thanhouser, Lux, Electrograph, Columbia, Kinograph, Motograph, Great Northern, Carson and Capitol.

During Mr. Cromelin's absence in Mexico the principles he advocated in the settlement of difficulties with the sales were not carried out. When he returned he found conditions so changed in the interrelation of manufacturers that the policies he advocated no longer fit the situation. He therefore retired.

Synopses of Current Films

Essanay

THE JILTED JOKER.

Alice Day has two suitors, handsome Frank Bowers and Bachelor Joe Wharton. On a day they both come to propose, one with a handsome bouquet of flowers and the other with an elegant box of sweets. Like Portia, Alice chooses through the gifts and takes the man with the box of candy who is Bachelor Joe. Handsome Frank leaves and the next week Joe and Alice are married. They go on their honeymoon to a neighboring city and stop at a hotel, to where Frank follows them. In a spirit of mischief he resolves to play a trick on the spoony couple and fixes it with the telegraph operator in the hotel to send a fake telegram from home stating that the minister who married them was not ordained, consequently their marriage is void. At the same moment that they read the telegram scarlet fever is discovered in the establishment and the place quarantined. Joe appeals to a clergyman who is staying at the hotel who gladly marries them. but a few moments later, during the vaccination, the house detective recognizes a tattoo mark on the supposed minister's arm and makes the dramatic announcement that this dignitary is no minister at all, but a crook. Things are fixed later when the lady telegraph operator confesses her share in the joke and the joker receives his just deserts.—640 feet.

HANK AND LANK—THEY MAKE A MASH.

It has been some time since Hank and Lank have made their appearance and this time it is in the sidesplitting comedy "Love's Labor Lost." Lank sees a young lady drop her purse and upon recovering it is invited by the damsel to see her home. It is with envious eyes that Hank watches his pal and then resolves to try to make a hit himself. We next see a young man masquerading for a ball, dressed as a young woman. Hank is laying in wait when the young woman passes and is invited to join her. They go to a park bench to spoon, but when Hank feels the rough chin of the fair one he realizes he has been stung.—366 feet. Released January 30.

CARMENITA, THE FAITHFUL.

A Mexican love story with many thrills and a deep appeal to the heart. Carmenita is the daughter of a Mexican inn-keeper and is loved by all. One day two young Mexican ruffians enter and make vulgar love to her, much to her dislike, when Frank Dougherty, a young cowpuncher, enters, and protects her. For this he gains the love of the girl and soon learns to love her himself. But the padre of Carmenita, miserly, seeking worldly gain, endeavors to pawn his daughter to a wealthy Mexican, but Frank appearing on the scene at the time insists that 'Nita shall be his. The father orders Carmenita from the house and the rich suitor swears revenge. Months pass and Carmenita and Frank are happy. But an accident occurs to Frank and for a time he is crippled, unable to walk. The rich suitor learns of Frank's misfortune, comes to the house and threatens to kill the now helpless husband unless Carmenita goes away with him. Carmenita, to spare her husband's life, does as the Mexican bids, and later when the doctor, who has called, learns of the kidnapping of his patient's wife, dispatches the sheriff and a posse in pursuit. They overtake the two when, Carmenita, having rebelled and attempted to slap her captor, is in danger of her own life at the hands of the rich Mexican, and is saved only by the timely interference of the sheriff and his men. Carmenita is restored to her husband and the Mexican imprisoned.—995 feet. Released February 4.

Solax

RING OF LOVE.

Old professor Gink, delving in the debris of an old fossil bed, discovers an ancient casket containing a collection of beautiful Egyptian gems. A very curious ring contained in the collection takes his fancy. This ring is wrapped in an old papyrus upon which is the inscription to the effect that whosoever wears this ring shall be given the power to draw unto themselves the affections of whomsoever might happen to be within reach. Happy at his great find, he ambles slowly homeward. Upon the arrival at his home his wife upbraids him for keeping dinner waiting. He nervously changing the ring from one hand to the other accidentally slips the ring on his finger. His wife's wrathy demonstrations immediately undergo a wonderful change. She falls to hugging and kissing him, much to his surprise. She leaves the room to get his slippers and pipe. Professor Gink, dropping into a chair, takes off the ring and puts it on the table. Mary the maid sees it and tries it on. As she stands admiring the ring the professor steals up and, putting his arms around Mary, begins to tell her how much he loves her. His wife returns to the room and, horrified to find her husband making love to the maid, she immediately begins to get busy. Mary flees to another room and thence to the kitchen. The iceman, upon entering the kitchen, showers Mary, who still wears the magic love ring, with his attentions. Likewise do the butchers, bakers and butlers demonstrate their cherished love. Mrs. Gink happens into the kitchen about this time. Angered at the way the tradesmen are treating her maid she rushes to a window and calls a policeman. The policeman arrives and disposes of the tradesmen. He gets the ring and is about to leave when to the surprise of everybody the wrathy Mrs. Gink, beginning to feel the influence of the magic ring, throws her arms around the policeman's neck and kisses him. With much difficulty he escapes from the house, but no sooner is he on the street when the girls surround him and make all sorts of fond demonstration. In the crowd that surrounds the policeman is an old maid. She decides that she must have this ring if it costs her her life. If it is simply wearing a ring that will procure her a husband she will not let this opportunity pass by. In the scuffle that follows the policeman is pushed into the river, with the ring still on his finger. The old maid, undismayed, jumps in after him, but upon fishing him out finds to her disgust that the ring has slipped from his finger.—Released February 3.

Nestor

THE BRIDAL TRAIL.

Ben Darwin had been a widower since Gilda's birth and the responsibility of being both father and mother to the girl weighed very heavily upon him. Bright colors, ribbons or anything that in the faintest manner suggested finery to the old man was most sternly forbidden his daughter. At present, however, what troubled Ben Darwin, was Gilda's friendship for Frank Boardman, a stranger in those parts. To keep the young man from the house was quite simple, but might the girl not meet him outside? As indeed she did—at her own little nook in the mountains, where from childhood her small treasure had been hidden. It was here that Gilda found Frank's note asking her to meet him at the Glen—a lovely spot in which their troth was plighted. But before the old man could be persuaded to give his consent, the elder Boardman arrived, and learning that his son was on the verge of marrying the mountaineer's daughter, he showed Darwin a letter in which Frank declared he didn't love and

had no intention of marrying "the girl in question." The girl in question, however, was Miss Grace Elkins, and although Mr. Boardman knew this quite well, he silenced his conscience with the "All's fair in love" adage. White with rage, old Darwin insisted that his daughter at once make preparations to visit her aunt, and indeed had already started with Gilda for the railroad station when Frank appeared, and learning of their departure, hastened to head them off. Then sending the astonished father up the road at the point of his gun, Frank jumped into the buggy beside Gilda and dashed off to the minister. But scarcely had the young couple been pronounced man and wife, when Darwin, accompanied by Mr. Boardman, whom he had met on the road, came galloping up. With a glance, the elder Boardman realized that he had lost. However, being a practical man, he accepted the situation gracefully and even went so far as to acknowledge the deception he had practiced upon Darwin, ask pardon, and gave the young people his paternal blessing.—Released February 1.

Pathé

HOW MAX WENT AROUND THE WORLD.

Max has announced to his wife his intention of taking a trip around the world, and bids her a fond adieu at the depot. His real intentions, however, are to have a good time in town for three months. That night he takes too much wine and is conveyed to his home by a waiter. Next morning his wife finds him on the sofa, and he tells her how the train had an accident and he came home to announce his safety. Telegrams begin to arrive for Mrs. Max at intervals from different countries. Max had forgotten to cancel the instructions he had given. How he got out of the scrape you will have to see the picture to ascertain.—633 feet.

GASOLENE FOR A TONIC.

A cripple having drunk some gasoline appears to get renewed strength and performs some funny stunts.—361 feet. Released January 23.

SAVED BY TELEGRAPHY.

The daughter of the general manager of the telegraph company becomes interested in telegraphy and calls at the office every day to get her lesson

in the art. Morton, the operator, who teaches her, loves her from the first and this love soon begets an answering emotion in the girl's breast. In response to an invitation from his sweetheart Morton goes to her father's office to meet her and accompany them to dinner. What is his surprise to find the office empty! He doesn't know that within the great safe vault behind the massive door closed and locked by a careless employe, is the general manager and his daughter, suffocating in the rapidly diminishing air; nevertheless he learns the awful secret and how he saves them from a frightful death by his sweetheart's knowledge of telegraphy provides a dramatic situation.—720 feet.

WHIFFLES' NEW SLEEVE.

A comedy of merit providing gales of laughter for everybody.—282 feet. Released January 25.

IL TROVATORE.

The Count di Luna has two young sons, one of whom, Manrico by name, is kidnapped by a gypsy named Azucena, who steals the child out of revenge for the death of her mother who was burned as a witch by the Count di Luna at some time previous to the story. She rears Manrico as her own child and he becomes a troubadour, or traveling musician. As such he wins the love of Leonora, a beautiful lady. Leonora is also besought by the young Count di Luna, successor of the aforementioned count, and brother of Manrico, although the brothers are not aware of their relationship. Count di Luna, becoming jealous of Manrico, provokes a duel, but during the contest one of the count's retainers treacherously stabs Manrico in the back and they leave him for dead. The count carries this news to Leonora, who, being griefstricken, prepares to enter a convent. But just as she is about to enter the convent door the count appears and starts to drag her away by force. In the meantime, however, Manrico has recovered from his wounds and appears on the scene just in time to frustrate the count's fell purpose. He conducts Leonora to her ancestral castle and preparations for their marriage ensue. The vengeful count now seizes Manrico's supposed gypsy mother, Azucena, and announces his intention of burning her at the stake. Manrico hears of this cruel plan on his way to the altar with Leonora, and at once postpones the wedding, rushing away to the rescue of Azucena. He only succeeds in effecting his own capture, however, and the count throws him into the same dungeon with Azucena. Leonora, hearing of her lover's plight, hastens to the count and begs for mercy. The count offers to spare Manrico's life on condition that she marry him (the count). She promises to do so and hastens to Manrico's dungeon to liberate him, herself taking poison on the way, as she cannot permit herself to become the Count di Luna's bride. Manrico lingers in the dungeon to say farewell to Leonora, who dies in his arms. At this point the count enters and finding Leonora lifeless, orders Manrico's execution, which forthwith takes place. Azucena now awakens from a stupor and calls for her son. The count informs her of his execution. Azucena then reveals to him his relationship to Manrico, and the play closes on the count's dismay and wild remorse.—964 feet. Released January 27.

FATHER AGAINST HIS WILL.

A young Lothario is to meet his sweetheart at the park entrance at 4.30, and on his way through the park he spies two babies abandoned for a moment while their respective mothers are on some trivial errand, which hides them from view. Our hero, liking babies, seats himself beside them to cheer their solitude. Finally he attempts to leave them, but a passing cop who thinks he is about to shift his fatherly responsibilities upon a cold world insists that he take "his" babies with him. Protesting violently he is driven along until he meets his promised wife, who is shocked and angered at his perfidy. In the meantime, the mothers are frantically searching for their lost kids. Everybody finally lands in the police station, where all is straightened out after a side-splitting scene—the lovers happily reconciled.—720 feet.

BETTY ROLLS ALONG.

Betty's cousin Ted brings a pair of roller skates to show his uncle and aunt. Miss Betty, of course, takes possession of them at the first opportunity, and decides that self-teaching in the art of skating is a thing to be practiced. Havoc and chaos naturally follow upon her first movements, and the room in which she commences her trial spin is quickly in a hopeless state of confusion. Chairs are broken, tables are overthrown, and glasses are smashed. Leaving this room, and abruptly descending the stairs, Betty finds herself in the street, tumbling into passers-by and bumping up against the world at large. On one occasion she takes a flying leap through a painter's canvas, which the artist happens to be trying to cover with a masterpiece. Other accidents of a like nature occur, and the upshot of it all is, that Betty has to make good use of her legs and her skates to get out of the line of vision of a large number of indignant and panting pursuers. As might be expected, she overreaches the mark, and skates off the steep bank of a small pond into an expanse of mud-colored and green covered liquid. She is fished out and carried home, wet and shivering; her mother gently tends her, but her father, as he pays out damages in coin and notes to the victims of his daughter's exuberance, says a very naughty word.—280 feet. Released January 28.

American

THE GENIUS.

John Smith has devoted the best years of his life to an invention which he firmly believes will revolutionize the engineering world. His efforts to bring the people likely to be interested to his way of thinking have reduced him to a state of abject poverty, but never for a moment has it shaken his faith in the value of his invention nor soured his happy optimistic nature. At last his efforts in the search for consideration are rewarded and Howard Livingston, a wealthy civil engineer, is interested to the extent of granting him an interview. He has adopted a family of waifs, as happy and hungry as he himself is and shares with them his "Chambers near the roof" and the few crusts he manages to absorb. He takes them with him when he goes to the rich man's house. He is kindly received by the daughter of the house, who, womanlike, at once recognizes the nobility of the character the shabby coat cannot hide. The children are taken care of and he is delicately offered the food he so much needs. His pride won't allow him to accept any well meant hospitality, but the close proximity of real food is too much for his impoverished constitution and he collapses in a dead faint. In this unconscious condition his would-be benefactor's partner robs him of his precious plans. He is discovered by the daughter and duly revived, but when asked by her father to produce his documents, finds that they have vanished. He is denounced as an imposter and leaves the house dazed and heartbroken. He wanders the streets all night and is found by a friendly policeman early the next morning asleep on a Park bench. He is taken to what he is pleased to call his home. In the meantime, however, the kind fates have not neglected him. The unscrupulous partner was seen taking the plans from the unfortunate fellow's pockets and is denounced. They are returned to their owner by Livingston, who, realizing their value, is pleased to offer Smith employment and a just share in the profits.—965 feet. Released January 30.

THE MISSION IN THE DESERT.

Nell, the Mexican girl, trusted Ned, the young prospector. She trusted him with her honor and all that a woman holds secret. She loved him. He was young and rash, but not bad at heart and he did not weigh sufficiently the seriousness of his relationship with Nell. Joe, Ned's partner, loved Nell, too. He was an older, saner man than Ned, and in spirit of noble-sacrifice, held back and encouraged the young folks in their love. But youthful love is sometimes impatient and that impatience conquered the discretion of Nell and Ned, and when the girl realized what she had done, she pleaded with Ned to marry her and save her honor. He bade her wait until he could take her back to his people in the East. Jose, Nell's brother, overheard the girl's plea and challenged Ned for an explanation. They were about to clash in combat when Joe interposed and learned the strained condition of affairs. He sent the Mexican on his way and broken-hearted, told his young comrade that they must part. This blow was terrible to Ned, for he loved Joe better than a brother, but his plea was in vain. Joe left all the gold to Ned, save one nugget and went away. No sooner had Joe gone than Jose stole in upon Ned and killed him. When Nell learned of her lover's death, she ran distractedly to his side and hysterically pleaded with him to come back to life and save her honor. A ranger found her beside the body and took her to her home. Jose confessed his crime and was arrested. Poor Nell was turned away from her home disgraced. A kindly neighbor took her in and reduced to an outcast, a subject of pity and charity, she began to pine her young life away. After a week of terrible suffering, she could stand it no longer and going to the grave of Ned, she bade him good-bye and seeking a secluded spot, was about to plunge a knife into her heart, when she discovered before her the "Shrine of Lourdes." A new spirit entered her heart, and looking out across the desert, she saw the Mission blazing white in the sun, beckoning her to come, where rest was waiting. The Mother Superior took her in and the doors of the Mission closed out the suffering of the world. Then it was that Joe returned, and learning of the tragedy of his young companion, he sought the grave. Nell was there in the garb of a nun, strewing the grave with flowers. The Mother Superior was with her. Joe pleaded with her to give up her seclusion and come with him, but the Mother turned her away and led her back to the Mission. Joe followed, pleading for his love, but the church had taken the girl to the solacing comfort of its bosom. The big oaken doors closed upon Nell, and brokenhearted, Joe turned back to struggle on alone in the world.—985 feet. Released February 2.

A WREATH OF ORANGE BLOSSOMS.

Biograph

The dressmaker's pretty daughter meets the son of her mother's patron while on an errand to deliver a dress. The son is attracted by the girl and later proposes marriage, which she, greatly flattered, accepts. This seems to be a dream to her, but its realization is in marrying the young man. Although the mother of the boy strongly objects to the marriage, still she makes the best of it, and receives the girl in her home as her daughter-in-law. The girl, coming from her humble surroundings is dazzled by her new experience and being rather attractive elicits the attentions of many of the male acquaintances of her husband's family. One in particular is rather more direct than the others and loses no opportunity to place himself in her way. The simple girl is of course pleased with these little attentions, particularly as her husband is in a mild state of depression owing to business difficulties. The tempter knows this and

becomes assiduous in his advances, which are more mildly repulsed by the wife who feels that her husband is neglecting her. At length the crash comes, and the husband is ruined. Everything lost, they are forced to move to cheaper quarters. This is decidedly irksome to the wife as the taste of luxury has in a measure spoiled her. She is in the throes of desperation when the tempter again appears and she becomes an easy prey, consenting to his plea for her to go away with him. Going up to her room to pack her grip, she, while gathering her effects, comes upon the wreath of orange blossoms she wore when she was married. The sight of these blossoms awakens memories of the past and impresses her with the enormity of the step she is thinking of taking. In her mind's eye she sees herself arrayed in her wedding attire, standing beside the man who loves her with an unselfish, honest love she could not hope to find in the man she would take this awful leap with. This decides her and she dismisses the tempter and all thoughts of him. Meanwhile, the husband has

been down town where he gets a chance to recoup. Promise of sunshine now hovers over the little home, where a few hours before all was gloom. —993 feet. Released January 30.

THREE SISTERS.

Mary is the youngest of three sisters and of an impressionable nature. She and her sister Florence are living at home with their widowed mother, while Adele travels on the road with a theatrical company. Adele returns from the road at the end of her season, and is not home long before she realizes that her place is with her mother and sisters. She finds that they neglect their poor old mother, running off to dancing parties every night, and what is worse, associating with a class of habitues no way conducive to their moral health. Adele, who is older and more experienced, decides to stay and watch over them. To better effect her plan she hires a hall and opens a dancing academy, thereby affording her sisters a chance to enjoy their favorite pastime under her eye. She is grieved to see that Mary is receiving the attentions of one of the most worthless scoundrels that frequents the place. The only reason for his presence at the academy is to lure innocent girls to their destruction. A sociable is given at the

academy and during its progress the Investigating Committee visits it. A young curate is one of the party and he forms quite an attachment for Mary, and appreciating the danger of her present surroundings, resolves to save her from the impending danger, for his interest has ripened into love. However, despite all of Adele's urging Mary will have nothing to do with the minister. Her ideal is the young good-for-nothing, who seeing Adele's anxiety to separate them, becomes more urgent and suggests Mary's going away with him. Mary, of course, consents, for he has only to suggest and she yields. Adele, upon her return from the dancing academy is amazed to find Mary preparing to leave with the contemptible cur. By subterfuge Adele gets Mary into her room and locks the door. She is determined to save her sister at any cost, but how? An idea. She lures the fellow to make love to her and at the proper time the other sister releases Mary to see what an unconscionable dog her choice is. He has in a moment transferred his attentions to Adele. The scheme works and Adele then shows the disgruntled scapegrace the door. The minister arrives and after a deal of soft persuasion wins Mary over.—997 feet. Released February 2.

THE TRY-OUT.

Edison

There is a young actor who finds himself out of an engagement and who is persuaded by a quondam friend to try a vaudeville playlet which he has written. Our hero invests his money in scenery and other paraphernalia and engages a leading lady after much trial and tribulation, for he cannot pay a very magnificent salary. The scene in the dramatic agent's office, where he finally secures the ambitious little girl to whom glory is more than ready money, is wonderfully true to life and to the actual conditions that exist. The next set is the rehearsal under the direction of the author of the playlet, which is comic in the extreme, as neither of the two young people play the parts according to the author's somewhat emotional ideas. Then comes the real struggle for our hero to obtain a footing. He must have the necessary try-out, a trial week in a small out-of-town theater to prove the value of his new act. The act does not go very well, as it is far from brilliant. The audience is very much bored, so much so that in despair the manager rushes back from the front of the house, rings down the curtain and invites the young people to pack up their things and depart without ceremony. There are two scenes, in the respective dressing rooms of the young people, which follow and which show their despair at this dashing of their wild hopes of fame and fortune. But being players, really and truly, they are not downcast for very long. There is a silver lining to every player's cloud and these two young people immediately find it. They decide that the act which proved so bad as played seriously would be very funny if they produced it in the broadly burlesque fashion, and plucking victory from disaster, they rearrange the act and appear before the same audience (having persuaded the manager to their point of view) and score, this time, a brilliant success. And in the meantime out of their joint trials and tribulations a little love story has grown, and they find that the try out has been a success for them in more ways than one.—995 feet. Released January 31.

BUMPTIOUS AS ROMEO.

Bumptious attends a theatrical performance which meets with his disapproval. When the curtain falls on the first act Bumptious leaves the theater in disgust, much to the discomfort of those seated in the same row, and to the embarrassment of a young lady in the row in front of him whose coiffure gets entangled in his waistcoat button—an amusing incident, not on the program. Stirred to action by the mediocrity of the performance, Bumptious decides to organize a dramatic club in order to show the world how to act upon the stage. He selects "Romeo and Juliet" with which to display his talent as an actor, and together with his friends he rehearses faithfully, coaching each one in the parts which he assigned to them. When all is in readiness he books a night at the Town Hall to give the performance. His friends turn out en masse to see him act; but acting is not such an easy matter as it appears to be, and Bumptious finds this out very quickly when everything seems to go wrong. The climax of a number of mishaps is reached in the famous balcony scene while he is making ardent love to the fair Juliet; the entire castle collapses and falls upon him, to the delight and edification of the boys in the gallery. It becomes painfully evident to the audience that Bumptious is not a howling success as an actor, and accordingly they depart after the second act leaving the theater empty. In the meantime Bumptious is having trouble back of the curtain upbraiding the stage hands for their negligence, almost getting into a row over it. Looking through the peep-hole in the curtain he makes the discovery that the theater is empty. This brings him to his senses and he hurries home, where he destroys his play-book and demolishes the bust of Shakespeare, vowing never to act again.—975 feet. Released February 1.

SELLING OLD MASTER.

Its beginning introduces us into a beautiful old Southern home. A mortgage upon the old place is being foreclosed, and the lawyer for the estate tells the "Old Master" that the home so long occupied by his family is their's no more. "Old Master" is not very strong, and the news is too much for his delicate health and results in his death, quiet but sudden; a death which leaves his young daughter, a girl in her teens, in charge of two old darkies, relics of the old slavery days. After the sale of the old home the girl is sent to New York, and we see her trying to make her way by teaching music. After some time the negroes also drift to the great city, not knowing that their "Little Missy' 'is there also. The girl gives music lessons to the child of a wealthy family, and there is a young man in the family. The result of this circumstance can easily be guessed. Then we see the old darkies in New York, without work and with very little money left. One day, in passing an auction room, they see an announcement of the sale of the Southern furniture from an old Virginia home and they recognize some of the heirlooms from the well-loved house. They enter and find the portrait of "Old Master" about to be sold to a saloon keeper who runs the old "Southern Planter's" saloon. With their last money, and by dint of much persuasion, they succeed in buying it from him, although he outbids them, and they then find themselves upon the street, without money and without means of support, but in possession of the treasured oil painting. An officer of the law invites them to move on, as they are attracting a crowd. At this moment two young people in an automobile see something transpiring upon the sidewalk about a portrait, the face of which is strangely familiar. In another instant the automobile has stopped and in a few seconds more the girl kneels, clasping the portrait in her arms, to the astonishment of its dusky possessors. Of course she takes them home with her to the new house, and of course "Old Master" occupies a prominent place above the mantel in the new establishment, while the old darkies become the faithful servitors of "Little Missy," as they were of "Old Master."—990 feet. Released February 3.

Among the Picture Theaters

PERSONAL NOTES.

Joseph Hopp, president of the Standard Film Exchange, Chicago, has returned from a three-weeks' vacation in the South. Mr. Hopp recently startled his friends in the film business by turning Independent. He says he went South to recuperate—his health, of course.

Henry Hirchais, for some time the efficient manager of the Alcazar moving picture theater of Anaconda, Mont., has assumed the management of the Park Grand of Butte, which is also one of the houses under the direction of the Montana Amusement Company.

George Shaver, manager of the Imperial Theater of Anaconda, has also severed his connection with the Anaconda branch of the Montana Amusement Company and the management of both theaters will be assumed by Paul Noble. Mr. Shaver also goes to Butte.

A. R. Pramer has taken the management of the Imperial Theater at Osage, Iowa.

Wm. Hemsky has purchased a half interest in the Amuse-U Theater, 310 First avenue, Cedar Rapids, Ia., from E. M. Henle and will devote his entire time to the business, taking charge of the Cedar Rapids house, while Mr. Henle will open a new house at Muscatine. Mr. Hemsky is convinced that the moving picture business has a wide field and it is his intention to show only the latest and best pictures.

C. L. Peifer, for some time manager of the Park Theater, Detroit, owned by Gilligham and Smith, has assumed the management of the Original Vaudette, Grand Rapids.

W. F. Tilford has been appointed manager of the Ark Theater, a moving picture house, at Murphysboro, Ill.

Francis Boggs, general manager of the Pacific Coast branch of the Selig Polyscope company, located at Edendale, near Los Angeles, Cal., made a flying trip to Chicago during the week of January 22 to consult with the home office. Mr. Boggs is not only manager of the Selig forces at Edendale, but also one of the producers, and his handiwork will be detected in several Selig photoplays soon to be released.

THE ROLL OF THE STATES.

CALIFORNIA.

The Dreamland, a handsome new moving picture and vaudeville house, has been opened on Fifth street, between A and Ash streets, San Diego, under the management of Joseph Schwartz, an experienced theatrical man, formerly of Sacramento and Santa Barbara.

E. A. Fisher, of Los Angeles, and R. William Gruber have formed a nickel theater syndicate to operate moving picture houses in the southern part of the state.

B. H. Vandenburgh will erect a moving picture theater and apartment building at the corner of Moneta avenue and Forty-seventh place, Los Angeles. The building will be 50 by 80 feet and the theater will be on the first floor, while the second floor will be devoted to apartments.

COLORADO.

The Osos Theater, of Canon City, has been taken over by Messrs. Robert W. Foss and L. G. Ludwig, who will conduct it as a high-class moving picture house.

CONNECTICUT.

Beginning with the first of the year the Scenic Theater, of Hartford, announced that until further notice moving pictures would be given in connection with the regular singing and dancing bill, introducing new films every other day, providing for three sets of pictures each week, changes being made on Mondays, Wednesdays and Fridays. Only the best pictures will be offered.

The Pastime is a late addition to Bristol's moving picture theaters.

FLORIDA.

A. B. Vance, of Jacksonville, has secured a long lease on the Astor building in that city and will convert it into a moving picture theater which will be up to date in every particular. No expense will be spared to make this place of amusement one of the most attractive of its kind in the city. The seating capacity will be 425 and the house will be open the year round. There will be a roof garden in which the exhibitions will be given during the hot summer months. The management will be under Harry K. Lucas, a well-known theatrical man whose past experience assures the new house of success. Mr. Lucas has made a success as manager and owner of some of the leading theaters in Dubuque, Ia., and Savannah, Columbus and Americus, Ga.

The incorporation of the Seminole Film and Supply Company marks the opening of a new industry in Jacksonville. The new company has offices in the Baldwin block on West Bay street and the officers are as follows: President, W. K. Haile; vice-president, H. J. Palmer; manager and treasurer, R. E. Boswell; secretary, A. G. Martin. The company has ample financial backing and is composed of prominent business men of recognized ability.

GEORGIA.

The Palace is the name of the new moving picture theater to be erected at 620 Cherry street, Macon, by J .B. Melton, one of the best known picture promoters in the South. No expense will be spared to make the Palace the most attractive house of its kind in the country.

ILLINOIS.

The Grand is the name of a new moving picture theater recently opened at 425 East Main street, Galesburg, under the management of Earl Brown.

George H. Waters will open a moving picture theater in the Metcalf building at Girard.

E. H. Morrell and son have purchased a moving picture theater at Watseka, which they will operate under the name of the Majestic.

W. H. Marple, the new owner of the Palace Theater, of Aurora, has been instrumental in incorporating the Palace Theater Company with a capital stock of $10,000. It is the purpose of the company to own and operate moving picture theaters in northern Illinois. The capital stock is $10,000 and the incorporators are W. H. Marple, P. Russell, W. H. Warren, Harry Geiss, Mell Kirwin and Paulina Oshe.

The Gem Theater, of Keithsburg, formerly owned by D. B. McFarland, has been purchased by Geo. H. Frick. Mr. McFarland has purchased the Dreamland Theater at Farmington.

The Nasawan is the name of a handsome new theater to be opened at 304 North Water street, Decatur, about February 6, under the management of M. P. Harvey. The management expects to run licensed films only.

A. E. Long, manager of the Dreamland Theater, of Galena, contemplates opening a moving picture theater in Princeton, for which purpose he has been seeking a location in that place.

Manager Webster, of the Pattee Opera House at Monmouth, announces that the house will be devoted to moving pictures when not occupied by regular attractions.

INDIANA.

The Star, Crescent and Palace theaters, moving picture theaters of Huntington, formerly owned by Ezra Rhodes, of South Bend, have been purchased by Don E. Rodgers, of Huntington. The Star and Crescent will be run as exclusive picture houses, while the Palace will be devoted to pictures and high-class vaudeville.

J. R. Brannen has leased property at Fourth and Main streets, Evansville, on which he will erect an up-to-date moving picture house at a cost of $15,000. The architecture of the building will be mission style.

Messrs. Gillespie and Brouillet, two enterprising young men of Elwood, recently opened the Superba, a high grade moving picture house in that city.

The Victoria, the latest and one of the most attractive moving picture theaters in the chain of this class of houses operated by M. Switow, has been opened in New Albany, and every indication points to its being as successful as the other places of amusement opened by Mr. Switow, who is the pioneer moving picture promoter of that city, his first adventure being the Crystal on Pearl street, which was a success from the beginning, as well as other houses with which he has been connected.

Frank Shaffer, who recently disposed of the Crystal Theater, Logansport, has opened the New Theater, a handsome moving picture house on Third street, making the fourth of its kind in the city. Mr. Shaffer had a very unique way of deciding upon a name for his theater. Each ticket buyer was given a vote on the prettiest girl in the city, and the winner would be allowed to choose the name.

The Crescent Stock Theater Company has been incorporated at Terre Haute with a capital stock of $10,000 for the purpose of operating moving picture theaters and other places of amusement. The incorporators are J. D. Roberts, John Hentzy and Thomas G. Moore.

IOWA.

The Busy Hour Theater at Jefferson has been purchased by Jay Wiggins for a consideration of $2,500.

The Bijou vaudeville theater at Iowa City has been purchased by W. H. Englert, who will conduct it as a moving picture and vaudeville house which will be under the management of H. LeRoy Smith.

Fred Dever will conduct a moving picture theater in the Mueller building, Iowa City.

Martin Beck is the manager of a new enterprise which will erect a new Orpheum theater in Sioux City at a cost of $15,000.

KANSAS.

The Majestic Theater, 102 South Main street, Hutchinson, has changed hands, having been purchased by James G. Buchanan, E. O. Curtis and G. B. Cummings, and the name has been changed to the Crystal, the name it formerly bore.

Dr. L. D. Blachly and Ross Denny, proprietors of the Dreamland Theater of Herington, will erect an airdome. The Dreamland Theater has been leased by M. Manheim.

Messrs. Auten and Embry have leased a building at Concordia in which they will open a moving picture theater about February 1st, making the second house for that place.

The Crystal Theater at Pittsburg has been purchased by Messrs. Ryan and Atkinson, who will continue the same high standard heretofore maintained by that house.

LOUISIANA.

The Winter Garden, of New Orleans, which has been the home of various theatrical attractions, has been leased by H. W. Lamb, who will convert it into a first-class moving picture theater.

The Imperial, a moving picture and vaudeville theater, has been opened at St. Charles under the management of J. P. Pittman.

MASSACHUSETTS.

The Dream is the name of a new moving picture theater which recently opened at Cliftondale under such favorable conditions that the management has reason to congratulate itself. The theater is very attractive, the color scheme being green and the woodwork is old English oak finish, which gives a very artistic and pleasing effect. The picture machine has an abestos booth, which insures against the possibility of fire.

The Olympic Theater,6 Bowdoin Square, Boston, has been leased by a syndicate, which will continue it as a moving picture theater.

The Princess Theater, of New Bedford, has been leased by William A. Wesley, of the Gardner Theater, Gardner, Mass., and it will be included in a chain of moving picture and vaudeville houses.

MICHIGAN.

Plans have been received by W. H. Macon, of Hancock, for a moving picture and vaudeville theater to be erected in that city.

The Vaudette Theater, of Cheboygan, has been purchased by the New Vaudette Theater Company, which is composed of Joe Amley, Ed Geyer and R. Lemieux, and will be conducted as a high-grade moving picture house.

The Idle Hour is the name of a new moving picture house opened at Corunna by George Sampson.

The Idle Hour Theater, of Cheboygan, which has heretofore been devoted exclusively to pictures, will add vaudeville to its program and for that purpose a well-equipped stage has been added.

The Crystal Theater is a new moving picture and vaudeville house recently opened in Sturgis by C. J. Crosley. It has a seating capacity of 500.

MINNESOTA.

W. R. Chamberlain has leased the Hourigan building at Wabasha and will have it remodeled into a moving picture theater.

MISSOURI.

The Bee is the name chosen by Manager Spore for his new theater recently opened at Trenton. The name was selected from a list of names sent in in response to a prize offer of $5.00 for the best name suggested and the prize was awarded to Miss Ethel Thomas.

NEBRASKA.

Messrs. Freed and Beck have opened a moving picture theater at Oakland, corner of Oakland avenue and Fourth streets.

NEW JERSEY.

The Opera House at Belvidere has been leased by parties who will conduct it as a motion picture house.

A new moving picture theater will be erected in East Jersey street, between Fifth and Sixth streets, Elizabeth. The building will be of cement block construction, 50 by 100 feet, and will have a seating sacapity of between 400 and 500. The contract has been awerded to George Schlotterer.

The Camden Amusement Company will erect a vaudeville and picture house at 209 Broadway, Camden, which will have a seating capacity of 600.

The Camden Amusement Company will erect a vaudveille and moving picture house at 209 Broadway, Camden, which will seat 600.

NEW YORK.

Application has been made by the Fireproof Film Company, of Rochester, for permission to build a factory and power house at Dewey, Ridgeway and Knickerbocker avenues, which will have a frontage of 206 feet in Dewey avenue, with a depth of 52 feet and a wing of 520 feet by 41 feet.

A moving picture theater is being erected at 160 Underhill avenue, Brooklyn, by Arthur T. Voight at a cost of $12,000.

The Carlfried Amusement Company has been incorporated with a capital stock of $2,500 for the purpose of conducting moving picture theaters, etc. The incorporators are Nathan Friedman, Long Island City; Abraham Carlos and Isaac Dobroczynski, both of Bronx.

The German Amusement Company of New York City has been incorporated to maintain moving picture theaters and other places of amusement. The directors are Charles Reis and Bertha Reis, 226 East Eighty-seventh street; Ida Podliasenck, 161 East Eighty-first street, New York.

OHIO.

Lima's fifth moving picture theater will be opened in the Collin's block, northwest corner of the square, under the management of H. B. Hoffman. Several thousand dollars will be spent in remoleding the building and making the new theater one of the handsomest in the state.

G. L. Donnels is making arrangements to open a moving picture theater at Gibsonburg.

A new moving picture theater will be erected on West Broad street, Columbus, by Albert Taylor, which, when completed, will be one of the most up-to-date houses of its kind in the city.

A new company controlled principally by John Swaine is erecting a new moving picture theater at 17 South High street, Columbus.

The Empress Amusement Company, of Toledo, has leased a building on Summit street at an annual rental of $4,500 in which it will open a moving picture theater.

The Star, said to be Dayton's handsomest moving picture theater, was recently opened on East Third street, between Jefferson and St. Clair streets, by George H. Heiser.

The management of the New Theater, corner of High and Goodale streets, Columbus, has devised a scheme by which moving pictures can be shown in a lighted theater. A combination of red and green lights has been hit upon which is said to light the house fairly well without spoiling the effect of the pictures.

OKLAHOMA.

The Lyric is the latest addition to the moving picture theaters of Chickasha.

The Idle Hour Theater, formerly owned by Ilsen Brothers, of Tulsa, has changed hands and is now located at 118 South Main street.

OREGON.

The Iris moving picture theater, of Klamath Falls, operated by Mrs. Grant Lincoln for the past three years, has been purchased by M. F. Lorenz, of Los Angeles, who will continue to operate the house.

PENNSYLVANIA.

The Lyric, a moving picture and vaudeville house of Reading, recently inaugurated a five-cent policy which is said to have resulted in increased attendance.

The Lyric Theater, of Siegfried, has been purchased by S. B. Walker, who will make a number of improvements and convert it into a first-class amusement place.

A new moving picture theater will be erected at 2420-26 North Twenty-seventh street, Philadelphia, for the North Penn Amusement Company.

The Nickolet Theater, of Allentown, has been purchased by George W. Bennethum, also proprietor of the Victor moving picture theater of that city.

A new moving picture theater was recently opened at Ephrata by Hiram Nessinger.

Plans are being prepared for an amusement hall to be erected at 2416 North Twenty-seventh street, Philadelphia, for the North Penn Amusement Company.

The Alban, a moving picture and vaudeville theater of Erie, has been purchased by C. R. Brown, of Youngstown, Ohio, who has remodeled the place and will conduct it under the name of the Photo-Play theater. Among the improvements is the addition of a large mirror screen, the first in the city, and a four-piece orchestra.

A moving picture theater will be erected at 425 South street, Philadelphia, by Max Katzman, at a cost of $10,000.

The Lyric moving picture theater, of New Bethlehem, has been purchased by H. C. McEwen.

A recent addition to the Silverman Brothers' string of moving picture theaters, is a house opened at 221 Market street, Harrisburg in a building which has been magnificently remodeled at a cost of $15,000. No expense has been spared in providing for the convenience and comfort of its patrons. The first floor contains a matron's room where the children of patrons may be cared for, a check room where parcels may be placed, and retiring rooms. One of the essential features is the ventilating system which consists of large exhaust fans. Special attention has been given to illumination and to the seating arrangements so there will be an unobstructed view from any part of the house.

The Hippodrome is the name of a new moving picture theater opened at Plymouth in the building formerly occupied by the Favorite theater. The house will be devoted exclusivly to pictures.

The Victor Moving Picture theater, 748 Penn street, Reading, has installed a mirror screen. The screen is of French plate glass and its size is 12 by 16 feet.

At a cost of $30,000 the building at 333 Market street, Philadelphia, has been converted into a moving picture theater, to

be oocupied by the Moving Picture Company of America, which controls similar houses at Nos. 813-23-26 and 1211 and 1214 Market street. The house will have a seating capacity of more than 1,500.

Messrs. Ivor James, Teddy McNeal and George Stauffer will conduct a moving picture theater at Williamstown.

Wesley Edwards, owner of the Hippodrome and Casino moving picture theaters of Sharon, has purchased the Pastime theater on Broadway, South Sharon, which will undergo extensive improvements in the near future.

Plans have been completed for the remodeling of the building at 747 South Third street, Philadelphia, owned by B. F. Miller, into a moving picture and vaudeville house at a cost of $10,000. When completed the house will have a seating capacity of 700.

The Casino, a vaudeville and moving picture house of Harrisburg, is a recent addition to the theaters operated by the National Theater Company, about twenty-three in all. The program will consist of five vaudeville acts and four reels of pictures. The pictures will be changed daily and the vaudeville acts twice every week.

A new vaudeville and moving picture theater has been opened at 1203 North Third street, Harrisburg.

D. P. Carr of Rochester, N. Y., is at Chester, Pa., looking for a site for a new vaudeville and M. P. theater. He says he will spend $100,000 on it and it will have a seating capacity of 2,000. He formerly managed the Family theater, Chester. He says he will open his new theater about February 1, 1911.

Miller Bros. have purchased the M. P. theater at Stroudsburg and will continue it as the Nicklet.

Motion pictures are now being shown weekly to the pupils of the Wilkesbarre public schools. This suggests a new industrial field for operators who own a dark-room plant. They can show pictures in public schools the year around and make a good livelihood. And the public school field is a large one.

F. E. Stetler succeeds to the Empire M. P. theater at Reading, Mr. Zerr, his partner, retiring.

The Moving Picture Company of America, which controls several Market street M. P. theaters, Philadelphia, will erect another, to cost $100,000, at 333 Market street.

The Palace theater, Reading, Pa., purchased by William K. Goldenberg, is pulling big houses to M. Ps. and vaudeville.

Rahway, N. J., can support another good M. P. theater, it is said.

Clayton, a fair-sized town in South Jersey, wants an up-to-date motion picture theater; also a skating rink.

The Camden Amusement Company will erect a new vaudeville and M. P. theater at 209 Broadway, 31x120 feet. It will be of stone, brick and steel and seat 600. Work on it has started.

SOUTH DAKOTA.

The Lyric, claimed by its owners to be the finest electric moving picture theater in any city of its size in the state, has been opened at Woonsocket by G. W. Ryckman and son

O. F. Trisler is now sole proprietor of the Iris theater of Lead, having purchased the interests of his partners, S. C. Prothero and Frank Rainey.

TEXAS.

Messrs. Fairman and Long, of Waco, have leased the Harrison building at Bryan, in which they will open a moving picture theater.

Henry Quenten, who has been operating a moving picture house in Rockdale, will open up a first-class moving picture theater in Brenham.

The explosion of a coal oil stove in the Orpheum moving picture theater, 1511 Main street, Fort Worth, resulted in about $1,000 damages, the front, machines, films, records and office being destroyed, together with the paper money of the night's receipts. Through the presence of mind of the proprietor, Louis Cummings, no one was injured.

Denison now has its third moving picture theater, the same having been opened at 413 West Main street by O. O. Benter, of Springfield, Mo., and E. S. Sittle, of Muskogee, Okla., both of whom are experienced in this line.

The Healy is the name of a new moving picture house recently opened at Fort Worth by R. A. Healy, which is noted for its attractiveness.

A moving picture and vaudeville house will be opened in the new Tyrrell building in construction at Beaumont. It will be under the management of Henry C. Stearns whose experience along this line assures the success of the new enterprise.

UTAH.

The Photoplay Theater is a late addition to Salt Lake City's list of moving picture theaters and is under the management of F. J. S. Jones.

The Western Moving Picture Company has been incorporated at Salt Lake City with a capital stock of $500. The officers of the company are as follows: President and treasurer, A. P. Mehesy; vice-president, J. K. Johnson, who with F. G. Anderson, constitute the board of directors.

One of the neatest little moving picture houses of that section of the state and the first and only one in the place, has been opened at Bountiful by a stock company incorporated with a capital stock of $10,000, of which Dr. B. L. Kessler is president, Lamoni Call, vice-president, treasurer and manager, and W. G. Carr, secretary. The house is heated by a hot air system, has a number of exits and is a model house for a town its size.

The Daniels of Salt Lake City, now controlled by H. H. Daniels, was recently opened as an exclusive picture house. The theater has been redecorated in an attractive manner and other improvements have been made. The proceeds from the opening was devoted to charity. Walter S. Rand will have charge of the house.

Articles of incorporation have been filed for the Rex Theater Company with principal office of the corporation at Provo. The business of the company is to carry on a general amusement business including moving picture shows, film exchanges, etc. The capital stock of the company is $15,000 and the officers are as follows: President and treasurer, John B. Ashton; vice-president, E. J. Rhoad; secretary, C. T. Stanley.

VIRGINIA.

The building at 319 High street, Norfolk, has been converted into a moving picture theater with a seating capacity of 300 The house will be known as the Olympic and will be under the management of Captain Charles T. Bland, who formerly operated the Dreamland in High street, near Middle.

WASHINGTON.

Ten of the thirteen moving picture houses of Tacoma recently organized the Moving Picture Theater Managers' Association for mutual protection against adverse legislation and criticism. The officers elected were as follows: President, William Fitz Henry, of the Lyric, Palace and Majestic theaters; treasurer, Harry Nease, of the Circuit Theater; secretary, Meyer Cohen, of the Scenic Theater; members of the judiciary committee, William McNeish, of the Coast and the Bijou Theaters, and Benn Cozza, of the Royal.

The Washington Hotel, of Centralia, one of the best-known hotels of southwestern Washington, has been converted into a vaudeville and moving picture theater by its owner, J. D. Rice. The upper part of the house will still be conducted as a hotel, while the lower part will be devoted to the theater.

Pasco is to have a third moving picture theater which will be under the management of J. W. Walker, formerly of Montana. The house will be located on Lewis street, near Fourth, in the Horrigan building.

WISCONSIN.

During the past year twelve moving picture theaters were erected in Milwaukee at a cost of $122,200.

The Crystal Theater, of Dodgeville, has been purchased by Joseph J. Schmitt. The present manager, John Griffiths, will be retained.

The Vaudette, of Menasha, has been purchased by the Hill Brothers. Earl Hill will have the management of the house.

Henry Klein will erect a moving picture theater at 2429 Lisbon avenue, Milwaukee, at a cost of $4,500.

Harold E. Brady will conduct a moving picture theater at Crandon.

A new moving picture theater was recently opened at Rhinelander, under the management of Herman Zander.

The "Home," a $10,000 family theater, devoted exclusively to moving pictures, is the latest addition to Portage amusement places. The house will have a frontage of 41 feet with a depth of 106 feet and will be thoroughly up-to-date in every respect. The building will be heated by steam. Messrs. Judson and Evers are the proprietors.

The Atlas theater, a new fireproof moving picture house with a capacity of 1,000, was recently opened on Third avenue, between North avenue and Lee street, Milwaukee, by the Atlas Amusement Company, John C. Henning is manager.

Roderick Carroll has opened a moving picture theater at Durand.

Plans have been drawn for a moving picture theater to be erected at Eleventh and Greenfield avenues, Milwaukee, by O. Brown.

Record of Current Films

Believing the classification of film pictures by the nature of their subjects to be of greater importance to the exhibitor than classification by maker, THE NICKELODEON has adopted this style in listing current films. Exhibitors are urged to make use of this convenient tabulation in making up their programs. Films will be listed as long in advance of their release dates as possible. Film manufacturers are requested to send us their bulletins as early as possible. Reasonable care is used, and the publishers cannot be responsible for errors.

LICENSED

Date.	Title.	Maker.	Length.
	DRAMA		
1-2	The Two Paths	Biograph	992
1-2	The Argonauts	Selig	1,000
1-3	In the Days of Chivalry	Edison	1,000
1-3	The Redeemed Criminal	Essanay	1,000
1-4	A Lock of Hair	Eclipse	978
1-4	The Cowboy's Innocence	Pathé	1,000
1-4	The Bolted Door	Kalem	975
1-5	Ramona's Father	Selig	1,000
1-5	His Last Parade	Lubin	390
1-5	The Crimson Scars	Melies	980
1-6	An Intrigue	Pathé	1,000
1-6	The Runaway Engine	Kalem	955
1-7	The Old Water Jar	Vitagraph	984
1-9	Shadows of the Past	Selig	1,000
1-9	The Italian Barber	Biograph	998
1-9	Tag Day at Silver Gulch	Lubin	935
1-9	The Evils of Betting	Pathé	676
1-10	The Test of Friendship	Edison	1,000
1-10	A Child's Plea	Gaumont	758
1-10	The Sophomore's Romance	Essanay	1,000
1-11	Washed Ashore	Eclipse	670
1-11	For the Love of an Enemy	Kalem	995
1-12	The Owner of the "L. L." Ranch	Melies	980
1-13	Water Lillies	Vitagraph	991
1-13	The Link That Held	Edison	966
1-13	The Heart of an Indian Mother	Kalem	1,000
1-14	The Girl of the West	Essanay	960
1-14	Coward or Hero	Vitagraph	975
1-14	A Simple Rustic Tale	Gaumont	958
1-14	The Battle at Redwood	Pathé	1,000
1-16	Buddy	Selig	1,000
1-16	His Trust	Biograph	996
1-16	Saved by Her Prayers	Pathé	331
1-17	The Sealed Letter	Gaumont	837
1-17	With Interest to Date	Edison	1,000
1-17	His Master's Son	Essanay	1,000
1-17	Three Men and a Maid	Vitagraph	1,000
1-18	Her Chum's Brother	Kalem	980
1-18	Trailed by an Indian	Pathé	495
1-18	By the King's Order	Eclipse	991
1-19	His Trust Fulfilled	Biograph	999
1-19	A Brother's Redemption	Lubin	1,000
1-19	An Englishman's Honor	Selig	1,000
1-20	Mike the Miser	Edison	990
1-20	Robbie and the Redskins	Kalem	850
1-21	The Border Ranger	Essanay	985
1-21	The Kleptomaniac's Repentance	Gaumont	965
1-21	The Marked Dollar	Pathé	968
1-21	Cast up by the Deep	Vitagraph	1,001
1-23	Fate's Turning	Biograph	998
1-24	An Eventful Evening	Edison	
1-24	A Sin Unpardonable	Essanay	1,000
1-24	The Twilight of a Soldier's Life	Gaumont	945
1-25	Saved by Telegraphy	Pathé	720
1-25	The Sailor's Return	Eclipse	689
1-25	The Secret of the Still	Kalem	950
1-26	How Mary Met the Cowpunchers	Melies	980
1-26	Father Love	Lubin	1,000
1-26	The Spy	Selig	
1-27	Girl of the Mountains	Vitagraph	
1-27	The Black Bordered Letter	Edison	1,000
1-27	Puritans and Indians	Kalem	970
1-27	Il Trovatore	Pathé	970
1-28	The Two Reformations	Essanay	
1-28	The Baby Fortune Hunters	Gaumont	582
1-30	The Little Circus Rider	Selig	
1-30	The Escape from the Tuileries	Pathé	1,000
1-30	A Wreath of Orange Blossoms	Biograph	993
1-31	Jean Rescues	Vitagraph	970
2-1	The Sheriff's Sister	Kalem	1,000
2-2	Only a Sister	Malies	980
2-2	Three Sisters	Biograph	997
2-3	Selling Old Master	Edison	990
2-3	The Trail of the Pomos Charm	Kalem	1,005
2-3	The Slave's Revolt	Pathé	722
2-3	Society and the Man	Vitagraph	880
2-4	A Cowboy's Devotion	Pathé	1,000
2-4	Carmenita, the Faithful	Essanay	995
	COMEDY		
1-2	Art and the Legacy	Lubin	950
1-2	The Misplaced Petticoat	Pathé	790
1-3	All Is Fair in Love and War	Vitagraph	973
1-3	The Artist's Pay Day	Gaumont	972
1-4	Sleep, Gentle Sleep	Edison	990
1-5	When a Man Loves	Biograph	998
1-5	A Mix in Masks	Lubin	600
1-6	A Western Night	Edison	600
1-6	The Misses Finch and Their Nephew, Billy	Vitagraph	979
1-7	Love Under Difficulties	Pathé	745
1-7	The Woman Wins	Gaumont	945
1-7	The Count and the Cowboy	Essanay	1,000
1-10	Doctor Cupid	Vitagraph	987
1-11	The Twin Cinderellas	Pathé	
1-11	The Gardener's Ladder	Edison	700
1-11	The Twin Cinderellas	Pathé	705
1-11	Dusty Rhodes Takes a Flight	Pathé	249
1-12	The Rival Dramatists	Selig	1,000
1-12	The Midnight Marauder	Biograph	392
1-12	Help Wanted	Biograph	605
1-12	The Widow's Choice	Lubin	950
1-13	Max Is Almost Married	Pathé	572
1-13	So Near but Not Quite	Pathé	410
1-16	Will It Ever Come to This?	Lubin	715
1-16	Easy Coin	Lubin	250
1-16	Marguerite's Birthday	Pathé	659
1-18	Uncle's Birthday Gift	Edison	995
1-19	Changing Cooks	Melies	980
1-20	The Tables Are Turned	Pathé	981
1-20	The Girl in the Film	Vitagraph	963
1-23	Father Makes Himself Useful	Lubin	975
1-23	How Max Went Around the World	Pathé	633
1-23	A Robust Patient	Selig	1,000
1-23	Gasoline for a Tonic	Pathé	361
1-24	It Did Look Suspicious	Vitagraph	
1-25	The Lover and the Count	Edison	995
1-25	Whiffles' New Sleeve	Pathé	282
1-26	The Poor Sick Men	Biograph	991
1-28	Davy Jones in the South Seas	Vitagraph	
1-28	Father Against His Will	Pathé	720
1-28	Betty Rolls Along	Pathé	289
1-30	His Bogus Uncle	Lubin	1,000
1-31	The Jilted Joker	Essanay	640
1-31	Hank and Lank—They Make a Mash	Essanay	366
2-1	Bumptious as Romeo	Edison	975
2-1	Hearts, Hunger, Happiness	Pathé	690
2-4	A Queen for a Day	Vitagraph	995
	SCENIC		
1-2	Dutch Kids	Pathé	197
1-9	In the Land of Monkeys and Snakes	Pathé	276
1-10	The Hills of Corsica	Gaumont	243
1-11	The Home of the Seal	Edison	300
1-17	A Water Contest	Gaumont	168
1-18	Sea Birds in Their Haunts	Pathé	462
1-20	U. S. Light Artillery in Action	Kalem	95
1-24	Firemen's Parade	Vitagraph	
1-25	Scenes in Jersey Island	Eclipse	296
1-28	Gorges of the Bourne	Gaumont	293
	INDUSTRIAL		
1-6	The Fire Department of New York City	Edison	400
1-11	Wood Carving at Brienz	Eclipse	320
	TOPICAL		
1-7	The Funeral of Count Tolstoi	Pathé	230

DAILY LICENSED RELEASES.

MONDAY: Biograph, Lubin, Pathe, Selig.

TUESDAY: Edison, Essanay, Gaumont—Kleine, Vitagraph.

WEDNESDAY: Edison, Kalem, Eclipse—Kleine, Pathé.

THURSDAY: Biograph, Lubin, Melies, Selig.

FRIDAY: Edison, Kalem, Pathe, Vitagraph.

SATURDAY: Essanay, Gaumont—Kleine, Pathe, Vitagraph

INDEPENDENT

Date.	Title.	Maker.	Length.
	DRAMA.		
1-2	The Wise Druggist	Imp	995
1-3	The Pinkerton Man	Powers	
1-3	In the Heart of the Sierras	Bison	900
1-3	The Pasha's Daughter	Thanhouser	
1-4	Straw Ride	Atlas	
1-4	Days of the Early West	Champion	950
1-4	The Wall Partition	Ambrosio	500
1-4	At Cedar Ridge	Nestor	
1-5	Reunited	Imp	995
1-4	For. Better or Worse	Revier	
1-5	Antonio Toscarino	Itala	900
1-6	A Savage Girl's Devotion	Bison	900
1-6	The Rival Engine Drivers	Lux	367
1-7	A Woman Without a Heart	Powers	
1-7	The Red Light	Great Northern	
1-7	Queen of the Prairies	Columbia	
1-7	As the Master Orders	Reliance	900
1-9	An Arizona Romance	American	990
1-9	Their First Misunderstanding	Imp	998
1-9	An Erring Son's Awakening	Yankee	
1-10	The District Attorney	Powers	
1-10	An Indian Trapper's Prize	Bison	900
1-11	Sleepy Hollow	Nestor	
1-11	The Hour of Fate	Reliance	900
1-11	The Goose Creek Claim	Revier	
1-11	Sleepy Hollow	Nestor	
1-11	Bill's Widow	Champion	950
1-11	A Letter to the Stork	Atlas	
1-12	The Empty Shell	Imp	995
1-12	Joanna of Braganza	Itala	900
1-13	The Girl and the Burglar	Solax	
1-13	The Creek Claim	Bison	900
1-13	The Vote That Counts	Thanhouser	1,000
1-14	On Kentucky Soil	Reliance	900
1-14	The Recall	Itala	900
1-14	Monte Cristo	Powers	
1-14	A Homeless Boy	Great Northern	
1-16	Melody	Imp	995
1-16	The Folks Back Home	Yankee	
1-17	Texas Ted's Defense	Bison	900
1-18	A City Wolf	Atlas	
1-18	The Will of a Western Maid	Champion	
1-18	Their New Minister	Nestor	
1-18	For the Child's Sake	Revier	500
1-18	The Blue Domino Disguise	Ambrosio	500
1-19	The Bonanza King	American	
1-19	A Sad Fascination	Itala	900
1-20	Returned to the Fold	Yankee	
1-20	A Reporter's Romance	Solax	
1-20	The Redskin's Secret	Bison	900
1-20	A Dreadful Dilemma	Lux	586
1-20	The Old Curiosity Shop	Thanhouser	1,000
1-21	A Noble Heart	Powers	
1-21	The Vows	Reliance	900
1-21	The Trunk Mystery	Great Northern	
1-23	The Dream	Imp	1,000
1-23	The Convict's Last Chance	Yankee	
1-24	When Love Was Blind	Thanhouser	1,000
1-24	A Wife's Love	Powers	
1-24	The Red Man's Wrath	Bison	900
1-25	A Wife's Calvary	Ambrosio	500
1-25	For Remembrance	Reliancce	900
1-25	The Man in 23	Nestor	
1-25	Irish Hearts	Atlas	
1-25	Why He Went West	Champion	950
1-26	Bertie's Bandit	American	1,000
1-26	Phone 1707 Chester	Imp	997
1-26	The Revenging Picture	Itala	900
1-27	An Infamous Son	Lux	652
1-27	Trials of Bud Brown	Bison	900
1-27	Stealing a Ride	Thanhouser	
1-27	A Son of Old Glory	Yankee	
1-27	His Best Friend	Solax	
1-28	The Masqueraders	Powers	
1-28	The Last Laugh	Reliance	900
1-30	The Genius	American	965
1-30	The Taxicab Mystery	Yankee	
1-31	Only in the Way	Thanhouser	
2-1	A Brass Button	Reliance	900
2-1	His Great Sacrifice	Atlas	
2-1	Judged by Higher Power	Champion	950
2-1	The Bridal Trail	Nestor	
2-2	The Mission in the Desert	American	985
2-3	The Counting House Mystery	Yankee	
2-3	Adrift	Thanhouser	
2-4	The Command from Galilee	Reliance	900
	COMEDY		
1-2	Mrs. Gaylife's Visitors	American	970
1-2	The Great Medal Competition	Eclair	485
1-2	A Well Matched Marriage	Eclair	480
1-3	Beaux Not Wanted	Powers	
1-4	Trials of Tweedledum as Policeman	Ambrosio	500
1-5	The Tenderfoot's Roundup	American	950
1-6	The Night Cap	Solax	
1-6	The Royal Wishbone	Yankee	
1-6	Baseball and Bloomers	Thanhouser	
1-6	How They Tricked Father	Lux	498
1-7	Foolshead as Inspector	Itala	900
1-10	A Tip to Husbands	Powers	
1-10	Everybody Saves Father	Thanhouser	450
1-10	The Only Girl in Camp	Thanhouser	480
1-11	How Tweedledum Pays Bills	Ambrosio	500
1-12	Lucy's Lover	American	500
1-12	The Borrowed Flat	American	420
1-13	Bill as a Jockey	Lux	465
1-13	That Is My Name	Lux	438
1-16	The Battered Bride Grooms	American	525
1-16	A Dental Disaster	American	450
1-16	My Wife's Hat	Eclair	482
1-16	Jealousy of Sosthenes Ramulot	Eclair	478
1-17	A Montana Love Story	Powers	
1-17	Lover's Trials	Powers	
1-17	Bertie's Brainstorm	Thanhouser	1,000
1-18	You Try It	Revier	500
1-18	The Country Girl	Reliance	900
1-18	A Tailor's Queer Advertisement	Ambrosio	500
1-19	His First Patient	Imp	500
1-19	The Rev. Goodleigh's Courtship	Imp	500
1-20	His Faithful Furniture	Lux	360
1-21	The Visit of a Friend	Itala	500
1-21	A New Kind of an Arm Chair	Itala	500
1-23	When a Man's Single	American	1,000
1-23	Painless Extraction	Eclair	508
1-23	Kill the Fly	Eclair	442
1-24	Little Dorothy	Powers	
1-25	Tweedledum Within a Cask	Ambrosio	500
1-27	Prompt Payment	Thanhouser	
1-27	Little Willie Goes Cycling	Lux	236
1-28	Triumph of Intelligence	Great Northern	
1-28	Mr. Muggins Has His Sewing Done	Great Northern	
1-28	My Son Is Guilty	Itala	900
1-30	Maid or Man	Imp	995
2-2	An Imaginary Elopement	Imp	500
2-2	The Mix-Up	Imp	500
2-3	Ring of Love	Solax	
	SCENIC.		
1-11	Clouds and Ice Fields	Ambrosio	500
	SPORTS		
1-6	Salmon Fishing in Canada	Solax	

DAILY INDEPENDENT RELEASES

MONDAY: American, Eclair, Imp, Yankee.

TUESDAY: Bison, Powers, Thanhouser.

WEDNESDAY: Ambrosio, Atlas, Champion, Nestor, Reliance.

THURSDAY: American, Imp, Itala.

FRIDAY: Bison, Lux, Solax, Thanhouser, Yankee.

SATURDAY: Columbia, Gt. Northern, Itala, Powers, Reliance.

THE NICKELODEON

$2.00 Per Year | Published Weekly by ELECTRICITY MAGAZINE CORPORATION, Monadnock Building, Chicago | 10 Cents Per Copy

Vol. V | CHICAGO, FEBRUARY 4, 1911 | No. 5

THE NICKELODEON

PUBLISHED EVERY SATURDAY BY THE

ELECTRICITY MAGAZINE CORPORATION

MONADNOCK BUILDING, CHICAGO

ED J. MOCK AND PAUL H. WOODRUFF, EDITORS — JAMES B. CRIPPEN, ASSOCIATE EDITOR

LONG DISTANCE TELEPHONE: HARRISON 3014

NEW YORK OFFICE: 1433 HARTFORD BLDG., 41 UNION SQUARE
LAURENCE F. COOK, Eastern Representative
TELEPHONE, STUYVESANT 1672

LONDON OFFICE: 36 MAIDEN LANE, COVENT GARDEN
S. RENTELL & CO., Representatives

Table of Contents

Terms of Subscription.—UNITED STATES, CUBA and MEXICO ..... PER YEAR $2.00
CANADA ..... PER YEAR 2.50
FOREIGN COUNTRIES WITHIN THE POSTAL UNION ..... PER YEAR 3.00
SINGLE COPY ..... .10

DISTRIBUTING AGENTS: The Western News Company and its International Branches.

NOTICE TO ADVERTISERS.—Changes of advertising copy should reach the office of publication not later than Tuesday. Regular date of issue, every Saturday. New advertisements will be accepted up to Wednesday noon, but proof of such advertisement can not be shown until the appearance of the edition containing it.

NOTICE TO SUBSCRIBERS.—Remittances should be made by check, New York draft or money order, in favor of THE NICKELODEON. Foreign subscriptions may be remitted directly by International Postal Money Order, or sent to our London office. The old address should be given as well as the new, and notice should be received two weeks in advance of the desired change.

ENTERED AS SECOND CLASS MATTER JANUARY 15, 1910 AT THE POST OFFICE AT CHICAGO, ILLINOIS, UNDER THE ACT OF MARCH 3, 1879.

Scene from the Edison Feature Film, "The Doctor."

THE NICKELODEON

AMERICA'S LEADING JOURNAL OF MOTOGRAPHY

Vol. V | Chicago, February 4, 1911. | No. 5

ANOTHER KIND OF MINISTER.

IN THESE days when it has become the custom for clergymen and reformers to rise in wrath and speak out their low opinion of motion pictures, it is refreshing to come upon a minister now and then—and there are after all quite a number of them—who have a good word to say on the subject. The Reverend Herbert A. Jump is one of these. He is an advocate of motion pictures, and has written a pamphlet entitled "The Religious Possibilities of the Motion Picture," telling why.

Mr. Jump is minister of the South Congregational Church in New Britain, Connecticut. Sometime ago, in April of last year, Mr. Jump publicly expressed a hope that sometime a motion picture equipment might be owned and used by his church. In a city of 15,000 wage-earners, many of them of foreign birth, he felt that the motion picture could be made a serviceable adjunct to religious education. Two months later a prominent citizen of New Britain offered to endow a moving picture service in the South Church for thirty Sunday evenings, purchasing all necessary apparatus and meeting the expense of operation. The announcement of the gift excited considerable newspaper notice throughout the East as being a decided innovation in church methods. Mr. Jump spent much time during the summer making a study of motion pictures, visiting the manufacturer's studios, sitting with the National Board of Censorship, consulting with exhibitors and managers of exchanges, all in preparation for his series of Sunday evening services for the winter of 1910-11. Meanwhile the question of introducing the service was taken under consideration by the Standing committee of the church, and in October they came to the decision that circumstances made it unwise for the South Church to conduct a motion-picture service that year. So the long-laid plan was abandoned. But the interest aroused by the proposal seemed to justify Mr. Jump in publishing some memoranda setting forth the considerations which led to the original suggestion, and also a resumé of his efforts and investigations undertaken in the interest of the proposed services. The pamphlet before mentioned is the result.

Mr. Jump advocates the use of motion pictures in connection with church services as a means of making sermons interesting and vital. He points to the parable teaching method of Christ and argues that the motion picture can be enlisted to serve the same purpose, that is, of illustrating and bringing home the meaning of moral truths. He says the objections which certain well-meaning, but misinformed, people make against the religious use of motion pictures "can all of them be urged with equal force against the use of the most convincing parable which Christ ever uttered." (He is referring to the parable of the Good Samaritan.) "The films that have value for religious education today are those which portray truth as the Good Samaritan portrays it: in a dramatic story, of contemporary experience, exciting in character and thus interesting even to the morally sluggish, picturing negative elements such as crime, accident, ignorance, sin, and thus commending itself as true to life, but in the end showing the defeat and expulsion of these negative elements by positive elements, virtuous souls, God-like traits. The only thing needed to make the parable of the Good Samaritan a conspicuously successful motion picture film is a new title. Call it 'The Adventure of the Jerusalem Merchant,' and it would appeal perfectly to the habitué of the dime theater, and he would catch the noble moral of it far more swiftly, perhaps, than do many of the more well-to-do Christians who hear it rather than see it, when it is droned forth from the pulpit by the preacher of a Sunday morning as the New Testament lesson."

Mr. Jump gives five reasons why the motion picture can be a serviceable adjunct to the church. First, it can help the church merely as an entertainment device in a manner similar to the church sociable and the oyster supper. Second, it can help in giving religious instruction in the Sunday School. Pictures of travel through Palestine, and Biblical dramas are available and could be used extensively. In Mr. Jump's own words, "Joseph and Esther and Moses and Paul and Jesus are better known to the theater-goers today than they ever were before, thanks to Mr. Edison's invention." Third, it "can do more for foreign and home missions than any agency yet utilized by our assiduous and ingenious missionary secretaries." The work of the missions can be revealed through pictures to the stay-at-homes and their support thus be more enthusiastically enlisted. Fourth, it can aid the church as an agency of social education, for example, in up-lift campaigns against tuberculosis, crowded tenements, etc. Fifth, "the crowning possibility of the motion picture is its usefulness to the preacher as he proclaims moral truth. It will provide the element of illustration for his discourse far better than it can be provided by the spoken word. It will make his gospel vivid, pictorial, dramatic, and above all, interesting. The motion picture preacher will have crowded congregations, not because he is sensational but because he is appealing to human nature more successfully than his fellow-clergymen, because he is adapting his message to the psychology of his hearers, because he is employing a better pedagogical method."

Mr. Jump gives numberless arguments and reasons in support of his stand in favor of motion pictures, and they are all good. Instead of shying away from a new thing like the motion picture as if it were a bomb

or infernal machine, he goes and picks it up and examines it and finds that it is a social force, potent for good or for evil, which can be, with a little encouragement and persuasion, turned to his own uses. The bugaboo proves under investigation to be an instrument for good, and he is enthusiastic so to use it. Mr. Jump is on the right track. We wish more ministers and reformers, before wailing and gnashing their teeth over motion picture shows, would take their courage in their hands and actually go to see one. The step would possibly prove enlightening, and would at least be more just to the object of their revilements. Rational, definite, specific criticism coming from these gentlemen would be a benefit to the industry, but these vague, rumbling, long-distance imprecations are no good to anybody.

AGAIN WE SAY, ORGANIZE!

OVER two years ago, when we started The Nickelodeon, we began harping on the subject of organization. Off and on we have kept it up ever since; and today we believe we can begin to see slight manifestations of the association spirit—the tendency of men in a common line of work to get together and share their experiences to their mutual advantage.

To say that the motion picture industry is tremendous is trite. About fifty million dollars is invested in picture theaters alone, to say nothing of film exchanges and film manufacturing plants. These theaters give employment directly to approximately fifty thousand people, on whom are perhaps dependent a hundred thousand more. In this respect the industry is big, important and powerful.

But when we get down to hardpan we find that the picture theater business, classed by itself as distinct from the exchange business or the film manufacturing business, is neither important nor powerful. It is big only in a numerical sense. It is important only in the amount of money it circulates. It is powerful in no sense at all. Picture theaters today in the aggregate have no more real power than they would have if there were but a hundred of them instead of over ten thousand.

The reason for this is the simplest of the simple. The picture theaters are not organized. They have no association whatever. True, there are a number of city associations of exhibitors and few state associations, and the good work they are doing and the results they have accomplished serve only to emphasize the lack of a national organization.

Let us tell you a few things that a national organization, properly governed, could do. It could influence both the Motion Picture Patents Company and the Motion Picture Distributing and Sales Company, and force an open market, so that every exhibitor could show the films he wanted to show. It could dictate absolutely the quality of the films in use as well as—within reasonable limit—their price. It could, if its members should so desire, put the film exchanges on their good behavior by establishing its own distributing agency and buying from the makers direct.

That is the commercial side. On the other hand, think of what a strong national association could do in the matter of legislation, and in gaining the respect of the newspaper press of the country. Think of the political influence the combined exhibitors of the country could wield if they all would work to the same end. The exhibitors of the United States hold the eyes and the ears of 5,000,000 people every day, and they can place before them whatever they wish them to see and hear. Does not that thought suggest political possibilities?

In all the history of commerce no industry has ever gained a permanent and established place without organization. The manufacturers of films are at the head of the industry simply because of their extraordinary capacity for organization. The operations of the Patents Company and of the Sales Company should be proof enough of the power that organized men can wield. Get together!

NO RELEASE DATE.

IT IS announced by Kineto Limited of London, one of the Urban interests, that scientific films issued hereafter by that concern will bear no release dates. Perhaps the author of this innovation is a little ahead of his time; but his position is so logical that the future cannot fail to bear out its wisdom. There is no reason in the world why any scientific or educational film should have a release date. Subjects of that nature that have been released within the past year in this country, such as The Fly Pest, The Man Who Learned, The Red Cross Seal, The Healing Faith, The City of Boys and perhaps some of the Micro-Cinematograph subjects are in as much demand today as they ever were. A year from now they will still be in demand, if any copies remain that are physically fit to be shown. By their very merit they have automatically placed themselves outside the cut-and-dried selling scheme of their manufacturers. They have attained the dignity of a permanent value, uninfluenced by the ravages of age and the commercial run. The only possible way to reduce that value is to replace them by something better of the same sort. Release dates have no significance whatever to them.

We are not using this as an argument for a new selling arrangement to be put into effect immediately, but we know, and everybody in the industry who has put any thought on the matter knows, that the day is not far distant when every meritorious film will be handled in just this way.

THE GOLD SUPPLY.

SOME recent figures give the total value of gold produced in the United States last year as something less than $100,000,000. We wonder if this includes the amount of gold discovered in photoplays? Probably not. We wonder how much gold *has* been discovered in photoplays. Undoubtedly a vast amount, for there is no expedient so dear to the heart of the scenario writer as to send his hero "out West" and let him stumble onto a fortune in the shape of a gold mine. This happens very often—on an average of at least three times a week out of the forty-eight or fifty films. The fortunes range anywhere from a million dollars up; anything less would be beggarly. But let us be conservative and set the average at a million. Thrice a week give us three million a week—$156,000,000 a year. This shows that the photoplay gold for last year exceeds the amount of real gold by something like $56,000,000. This is surely an awful discrepancy and would warrant critics in leveling charges of gross improbability against the photoplay. Scenario writers had better drop the old expedient for a while and give the amount of real gold time to catch up. And incidentally give the long-suffering public a rest.

The Broadway Theater at Louisville

By G. D. Crain

THE moving picture theater has come to be regarded as a *sine qua non* in every section of Louisville, not only in the down-town district but also in the residence portions, each of which is regarded as being centuries behind-time unless it can boast of its motion picture house.

It requires more than the average executive and theatrical ability to organize and conduct a successful show in the outskirts of a city, or in the residence section, for unless the exhibition can "deliver the goods" in every respect comparing favorably with the offerings of theaters in the down-town section, the manager and owners of the suburban house will find their clientele dwindling and their profits decreasing, as the trade passes by to patronize the more up-to-the-minute establishments in the heart of the city.

In view of the undeniable fact that the suburban picture house must be up-to-date in every particular, catering to a certain class of "homesteaders" who do not partake of the offerings of down-town theaters, the Broadway theater, at Shelby street and Broadway in Louisville, might well be offered as an example of a strictly modern and high-class moving picture theater in a section of Louisville that is generally regarded as being a suburb, although it is not near the city limits. Intelligent advertising and real executive ability have been incorporated into the management of the Broadway, and it is now recognized as being one of the most successful picture houses of its kind in Louisville.

The Louisville Broadway Theater.
A Successful Suburban House.

The Broadway was established at its present stand in 1907, and has been remodeled several times in order to bring it up to each new advance that has been made in the moving picture industry within the last three years. It is owned by the Broadway Amusement Company, a corporation, and the "men behind the guns" in the theater management are Louis F. Steurle, president, and general manager Robert Hukill. The location of the theater is particularly advantageous, for although it is in distinctly a residence section, drawing a big patronage from the residents of the neighborhood, several big manufacturing plants, including Ballard's Flour Mills, are in the immediate neighborhood and their employes contribute generously after closing hours to the audiences at the Broadway.

The present Broadway theater is one of the handsomest edifices of its character in the city. The general style of the architecture follows that of the old Spanish mission, as the arched entrance is flanked by two low, square towers, giving a comfortable aspect of solidity and beauty such as is found in the missions of Mexico and Southern California. The building fronts forty feet along Broadway, the entrance arch being forty feet in height, while the auditorium extends back to an alley for 150 feet. The exterior of the house is made of concrete, with spread eagle ornamentations of stucco, the entire front being painted in harmonious shades of green. Four big globes, with opaque glass, each containing four 40-watt tungstens, illuminate the front of the towers that flank the entrance, while the entrance arch itself is studded with about one hundred and fifty 60-candle-power tungstens. The apex of the entrance arch is ornamented with a big electric sign reading "Broadway," this being composed of 100 60-candle-power tungstens.

The pinnacle of the arch is surmounted by a handsome art clock. The figures on the dial of the time-piece are beautifully worked out in colors, and the dial is illuminated at night, making a very handsome and effective piece of ornamentation for the theater exterior.

Each of the towers of the Broadway contains a big bulletin board, the frame being made of bronze, which contains the weekly programme of the show. In addition to these programme announcers, easels are used on the outside to advertise specialties.

The interior of the Broadway is striking on account of its simplicity of design. The walls and ceiling are painted in various shades of green, with no frescoing or lavish expenditure of multi-colored paints, and the impression produced upon the aesthetically inclined, who are weary of excessive ornamentation in picture shows, is very favorable. Eight 100-candle-power unit tungstens illuminate the interior between

shows and in addition to these lights there are 12 chandeliers, each containing four tungstens, which form the side lights around the walls of the house.

A big feature of the Broadway lies in the mirror screen that is used. This screen is 12 by 16 feet in dimensions, on a stage that is twenty-six feet wide and twenty feet deep, and the mirror attachment on the screen enables the Broadway client to enter at any time during the progress of the show and find a seat immediately, without groping in darkness. The mirror screen is being strongly advocated by progressive motion picture men throughout the country, and the New York authorities are planning to make this screen compulsory in picture shows, since the interior illumination afforded offers great advantages of security in case of panic or pick-pockets among the patrons.

The Broadway seating capacity is about 750 people, the opera chairs being ranged in slanting rows so that the seats in the last rows are equally as good as those in the front part of the house. The floor of the theater is covered with a cork carpet, making passage to seats noiseless and dustless.

The operating room in the Broadway is small and compact, being just large enough to contain the operator and three machines, a Pathé, a Powers No. 6 and a Standard, with comfort. Adjacent to the little operating room there is a good-sized apartment for the operator to wind or re-wind his films and attend to his duties without being hampered by lack of space.

In view of the fact that the Broadway is not fireproofed in concrete, being made of brick and stucco, with wood floors, the management has provided an extraordinary amplitude of exits for the patrons. Although the house seats only 750 persons as a capacity limit, eight large exits have been provided, two in front opening directly into the street, three at the side opening into a wide alley-way, and three in the rear, opening into a public alley.

Ample ventilating facilities have been provided in two thirty-six inch exhaust fans, with three ventilators, besides numerous windows that are located so that they may be opened to create a current of air without making a draught. As a precaution against the attacks of Old Man Winter, an up-to-date hot water heating system completes the interior equipment for the comfort and safety of the Broadway patrons.

The staff of attaches at the Broadway consists of a cashier, one ticket-taker, an operator and assistant, three ushers, a lecturer, a singer, the stage manager and janitor. Each show is of about an hour and fifteen minutes' duration, and is composed of four reels of films, with one illustrated song. A piano and drum make up the musical accoutrements of the theater, and the lecturer is used to explain dramatic and historical films as they are thrown on the screen.

Films from the Associated makers are used, and Manager Hukill often combines his duties as stage manager with that of the songster, rendering the popular ditty that makes the illustrated song on the program. The Broadway is open only from 6:30 to 10:30 p. m., as the experience of the management has proved that the evening entertainment policy is tried and true in a suburban district. On Sunday afternoon the show opens at 1:30 to continue until 10:30 at night, and the price of admission is changed on Sunday. Through the week, the admission prices are 10 cents for adults and 5 cents for children, but it has been found advisable to boost the scale to a general 10 cent level on Sundays, since the children cannot be accommodated at 5 cents to the loss of older patrons at 10 cents.

Since the Broadway has no direct competition within a radius of half a mile around its stand, President Steurle confines his advertising efforts to appeals to the residents of his immediate neighborhood. Every week the Broadway issues 6,000 hand-bills to the surrounding public, the medium of distribution being the small boy in search of a transient job. The bills contain a full description of the current programme at the Broadway and are labeled by Mr. Steurle as the one and only effective method of advertising for a suburban picture house, as ads in the daily newspapers appeal to the masses and not to the classes in the immediate vicinity of the theater.

Real Boy Scouts See Pictures

Motion pictures of the boy scout life will be the feature of a meeting of the members of the Uplift and Protective Society of Leavenworth, Kas. The pictures are to be shown at a local show and the boys will attend the performance in a body.

So far the boys have been going ahead with their work under the direction of their founder, Rev. E. L. Cunningham, and scoutmaster, Frederick Taylor. Not a one of them has seen a patrol of seasoned scouts drill. But in the pictures they will get to see it all and it is hoped that the boys may get some idea of what will be expected of them.

The pictures portray camp life, drills, games of the scouts, the first aid and many other scout duties. The local scouts are planning a camping trip to be taken as soon as the weather will permit. The boys will have this opportunity of seeing how the real thing is carried on. They will get ideas on how to arrange their camp and how to select it. In fact the pictures will clear their minds of the things which they did not know about the scouts.

"The pictures will be great things for the boys to see," Scoutmaster Taylor said. "They have a vague idea of what is expected of them but with the pictures all of this vagueness will vanish. I am glad that we have the opportunity of letting the boy scouts see the the pictures for I understand that they will show the camp life and other interesting features of scout life. The Leavenworth boy scouts are planning a two days' trip to be made as soon as they get on to the work. It will pay each and every one of the boys to attend the meeting and go with the crowd to see the pictures. I intend to get the boys and explain all to them immediately after the show and by doing so they will remember many good points."

The Poor French Duelist

Georges d'Esparbes, who recently fought a sword duel with M. Gegout, writes to the *Echo de Paris* to protest against the action of a cinemetograph firm (Gaumont), in showing pictures of the combat. He writes from Fontainebleau Palace, of which he is curator, and says that the film was advertised for exhibition in Fontainebleau itself, but he had succeeded in stopping the show.

No doubt, he continues, it is impossible to find a place for duels near Paris where the photographer cannot intrude, but M. d'Esparbes thinks elementary courtesy should prevent an action such as a duel, which is connected with a man's most private sentiments, from being exploited by searchers for advertisement and notoriety.

Who's Who in the Film Game

Facts and Fancies About a Man You Know or Ought to Know

THERE are a few men in the film business who have titles; who use them in connection with the names of their firms; who sign their letters with a pen and who offer no apology for such unusual practices. Among this little coterie none are more conspicuous than the mild-mannered, pleasant-voiced manager of negative production, the Edison Manufacturing Company, Orange, N. J. Here, too, we have an example of brilliant achievement without the environment of a lifetime in the show business. These two things augur well for an industry which cries out in agony for men—real flesh and blood fellows, who regard living and love of work well done as being something better than money and one thousand per cent per annum for its use.

There is some romance in the story of how Horace Gersham Plimpton plimped into a film factory. He was born in Brooklyn, was educated in Brooklyn, married a Brooklyn girl and has three Brooklyn children. That is punishment enough. Not that Brooklyn girls do not make good wives or that Brooklyn children do not make good families—not that; but did you ever stay over night in Brooklyn? Somehow, this Brooklyn miasma got in its deadly work on the Plimpton family in 1900 and they moved away—clear across the East River and Manhattan Island and the Hudson River, way out west—to Montclair, N. J. It was before the tubes and there were some anxious moments while the household effects were in transit. And even after this long flight into the far west, Horace G. stuck right to his post as manager of the designing department of the biggest carpet concern in America! Now you wise ones, you who are oldest in the business, what are you going to do about that? Is there any connection between carpets and cameras?

He Was a Regular Scream in the Amateur Show.

But we have to come to that romance thing, since it has been hinted at. In Montclair, the people just have to have some diversion in winter. They play golf in summer, or play at golf, you know, for the small pica players are few and far between. (Plimpton is in the nonpareil crowd—at golf.) So, for winter entertainment, they do amateur theatricals! Plimpton got into that bunch in Montclair and having been nurtured in Brooklyn he was the town cut-up once he got so far away from the sombre old burrough next the ocean. He was a regular scream in the amateur show. He joined the Montclair Dramatic Club—purely amateur organization; became a director and then its president. He was constantly such a guiding spirit that he's been president ever since, with brief exception, and still holds the honor. Well, it so happens that Frank Lewis Dyer lived in Montclair, N. J., before Mr. Plimpton discovered the place. Mr. Dyer, in common with the rest of the suburbanites, had become a patron of the Montclair Dramatic Club and, of course, he met the little man who managed the entertainments. How natural, then, that Mr. Dyer and Mr. Plimpton found something of mutual advantage. To make a long story short, Mr. Dyer saw in Mr. Plimpton the very man he wanted. On the other hand Mr. Plimpton, who had never flitted from one place to another, took lots of time to think it over. He finally threw over the carpet works and took hold of negative production. Everybody thought he was acting unwisely except Dyer and himself. Plimpton's decision was prompted by the enthusiasm of Mr. Dyer, the character of the Edison organization and the courage that he would make good.

It was in April, 1909, that the Edison Company recognized a new department head and it has had pride in doing that same thing ever since.

Mr. Plimpton's life is divided between his employer and his family. He has a little time for the Montclair clubs of which he is a member—an even less amount of time for golf of which he is very fond, but his love for his work—its long, confining hours and its many intricacies—is his one hobby. Results mean everything to this producer who has the loyal backing of his house and his co-workers.

There was a time in Mr. Plimpton's career when he wished to become a civil engineer, but he is far away from that thought now. His education included the full scientific course in Brooklyn's Polytechnic Institute. Having reached forty-five, his hair about the temples shows gray and, while it is usually closely cropped, there is a marked tendency for it to curl. His

forehead is broad, surmounting as keen an eye as ever looked out from beneath such a canopy. At work he wears glasses.

It is presumed that he knows a lot about scenarios and the men who write them, or think them. It is even hinted that he bought one of Sam Schiller, who would write one if he could. At any rate, the Edison-Plimpton pictures would indicate that there is no mistake in the combination responsible for their production.

Canadian Censorship

It is understood that the provincial legislature of Ontario, Can., is contemplating considerable alterations in the regulations governing motion pictures for the city of Toronto and province at large. As the law now stands, a film may pass the official censor in Toronto, and be emphatically restricted by the local police of Hamilton or any other town or city to which it may be passed on. This condition of affairs has caused the proprietors of theatoriums throughout the country no end of confusion and expense, and they have made repeated appeals to the authorities for relief.

The plan which the government is believed to have under consideration involves the appointment of a central board of about three censors to pass on all films submitted for exhibition in any part of the province. Each film endorsed in this way by the board would be stamped with some mark of approval, which would authorize any picture show proprietor to throw it on his screen.

It is also understood that a regulation will be passed prohibiting the managements of motion picture shows from admitting children of less than sixteen years of age unless they are accompanied by an adult.

Y. W. C. A. Using Pictures

Moving picture films being not extremely expensive, there is no reason why local organizations, if they are not satisfied with the quality, character or volume of those offered to the public, should not go into the market and purchase a moving picture outfit for their own use. It is as easily done as buying records for a phonograph.

This happy thought has occurred to the St. Louis Young Women's Christian Association, which will provide itself with exactly the sort of pictures it likes to see.

Willing friends of the young women's organization have provided them with the necessary machinery. It will be installed in one of the gymnasiums of the association and there will be equipment suitable for use in connection with the Sunday afternoon vesper service. Other local societies, lodges, even churches, are not barred from a similar investment.

Mayhap the church picture show will take the place of the "sociable" and the oyster supper or be incorporated with it. As an intermission at the ball of a private dancing club or as an afterpiece at a charitable society's meeting it may prove a pleasing diversion.

One need not wait for Burton Holmes or Samuel Newman to enjoy a travelogue; a "trip through Sweden or Morocco" may be had for the asking—and a little money. The moving picture shows seem to enjoy inexhaustible popularity, and they are suited to every possible social occasion.

Antipodal Analogies

Contemporaneous with the announcement that the czar of Russia is very fond of his moving pictures comes the announcement that at Rushville, Mo., about twelve of the population were recently saved from destruction by being in attendance on a moving picture show.

In the case of Rushville it seems that at least twelve of its people have been in the habit of making the electric light plant their "hang out." The boiler was accommodating and exploded while these people were at a moving picture show. It remains to be seen whether some Nihilist will take occasion to blow Nicholas up while he is at the palace attending his beloved moving picture show. But Nicholas is in imminent danger. The people of Rushville were fortunate in that the moving picture show was not put on in the electric light plant. In the case of Nicholas it seems that he has his moving pictures served to him in the palace at St. Petersburg. Here is the chance of all chances for the bomb exploder. If Nicholas will profit by the example of the humble Missouri town he will go from the family roof to see his moving pictures, take his pleasures along with the hoi polloi, and get off safe. It were well for Nicholas to give up his private theater and mingle with the rabble.

Des Moines School Board Gives M. P. Shows

Free moving picture shows in school buildings is the latest innovation to be introduced in Des Moines.

For the instruction and entertainment of the school patrons as well as the school children, a number of evening picture shows will be given in the various school buildings, using the picture films owned by the Des Moines school board. These films are used in the daily work of the school to show the development of cotton, for example, from field to the loom, and other industrial pursuits. There are also many films of pictures of noted paintings, natural life, and of scenes in foreign countries.

The board has been anxious for a number of years to institute neighborhood entertainments. For that reason large assembly rooms on upper floors of new school buildings have been urged. The success of the moving picture entertainments given recently at the Brooks school building assures the project. Several of the schools now own phonographs and in connection with the picture entertainments classical musical programs will be given.

Iowa Regulations

A new ordinance licensing and regulating Sioux City theaters has been presented to the city council.

The proposed ordinance will increase the licenses of every Sioux City theater. The proposed license fee will be in proportion to the class of theater. The New Grand and Orpheum will each pay $150 a year, the 10 cent shows $75 a year, and the 5 cent shows $50.

Besides proposing an increase in licenses the ordinance is drawn to control the character of shows. Fines or imprisonment, or both, are proposed in cases of violation of the ordinance. Violations are to be determined by an official critic to be designated by the council.

In Le Mars, members of the city council have adopted an ordinance prohibiting the operating of moving picture shows on Sunday and placing restrictions on the kinds of pictures to be exhibited.

New Amusement Patents

By David S. Hulfish

It will be the purpose of this department to list all United States patents, as they are issued, which pertain to any form of amusement business, giving such data in each case as will enable the reader to judge whether he wishes to see the complete darwings and specifications of th patent. When patents of special interest to The Nickelodeon readers are encountered, the descriptive matter herein will be amplified accordingly. A complete copy of drawings, specifications and claims of any patent listed will be furnished from this office upon receipt of ten cents.

PATENT No. 970,199. Method of Printing Moving Picture Films. Frank L. Dyer, Montclair, N. J., and Delos Holden, Upper Montclair, N. J., assignors to Edison Manufacturing Company, West Orange, N. J.

A prior patent to the same inventors, U. S. patent No. 963,125, for a projecting machine or motion head, was reviewed in Nickelodeon of December 1, 1910. This improved motion head has two intermittent mechanisms and projects alternately from two different portions of a single strip of film images. The proper printing of the film images for this motion head is the object of the patent No. 970,199. The camera

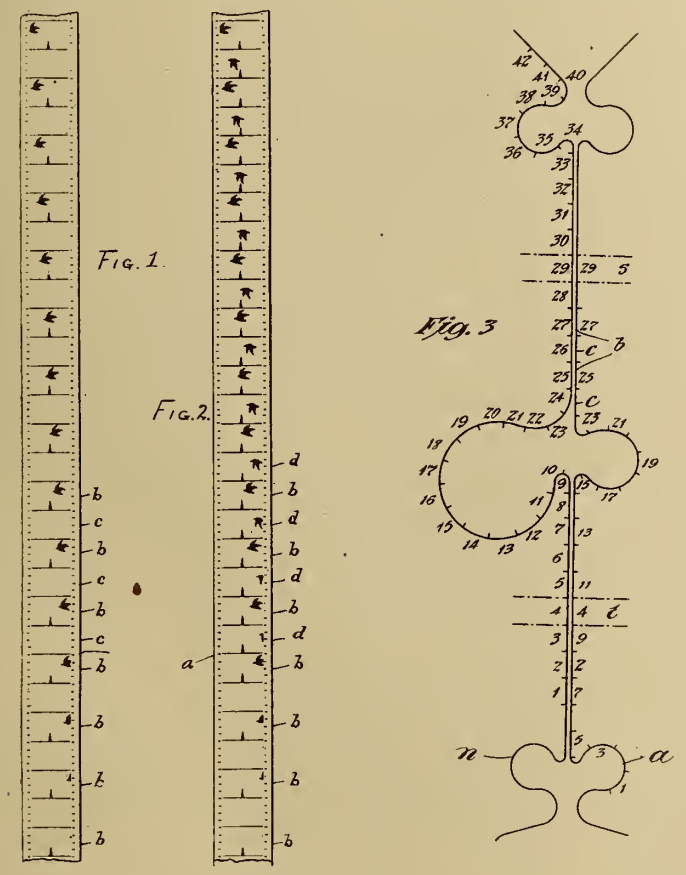

970,199.

makes the pictures in a single series, and the printing machine separates them into two series and arranges the series properly on the positive film. The patent not only describes the present invention, but speaks to some extent of the prior art. The descriptive text of the patent is as follows:

In the present commercial moving picture art the negative of the moving picture is secured by means of a camera of the type disclosed in Edison Reissue Patent No. 12,037, dated September 30th, 1902, and results in the production of a long film containing negative photographic impressions of the object or objects in motion, arranged in a single straight line sequence, and representing successively the corresponding successive phases of movement. The positive pictures are printed from such a negative (after the latter has been suitably developed and fixed) in an apparatus somewhat analogous to a camera, and arranged so that the negative, and a sensitive film on which the negative is superimposed, may be simultaneously and intermittently fed past a light opening, a shutter being employed to admit light during the periods of rest, so as to result in the printing of the negative images upon the sensitive film, which when developed and fixed will carry the positive impressions. A printing machine of this general type is disclosed in the patent to Lumiere, No. 579,882 dated March 30, 1897.

In Patent No. 875,333, granted to us December 31, 1907, we describe a moving picture film in which the photographs, instead of being arranged in a single straight line sequence, are arranged in two separate arithmetical series alternating with each other, and one series being shifted longitudinally of the film with respect to the other. With such a film, it becomes possible to exhibit the pictures of the two series in alternation at different exposure openings, whereby during the time that one picture is being exhibited, the following picture of the other series may be moved in to position to be subsequently exhibited, so as to thereby permit a continuous exhibition of the pictures on the screen without varying the amount of light used, and consequently doing away with the objectionable flickering at present experienced.

Our present invention relates to an improved method by which a film of the type referred to may be printed from an ordinary moving picture negative obtained as at present, and in an apparatus corresponding substantially with printing machines now used in this art except that it has two exposure openings and means whereby the negative film is shifted longitudinally with respect to the positive between the two openings.

In order that the invention may be better understood, attention is directed to the accompanying drawing forming part of this specification, and in which—

Figure 1 represents the film as the same would appear if developed and fixed after passing only one exposure opening; Fig. 2, is a corresponding view, showing the film as finally produced. In both of these views, we illustrate a flying bird as the moving object, and a steeple as the stationary background. Fig. 3 is a diagrammatic view showing the relative arrangement of the positive and negative films, the photographs of the negative being numbered and the photographic impressions of the positive bearing the same numbers as the photographs of the negatives which produce said impressions.

In carrying our invention into effect, we proceed as follows: A suitable moving picture negative *n* of the usual type in which the photographs appear in regular numerical sequence is first secured. A sensitive film *a* is then placed in juxtaposition to said negative and the two films are together passed across a suitable exposure opening *s* and pictures *b* separated by unexposed blank spaces *c* are printed on the sensitive film preferably by arranging the shutter so as to admit light only when alternate figures are brought to rest at said openings. Thus in Fig. 3 assuming the path of the two films to be downward, the odd numbered pictures will all be printed at the exposure opening *s*, blank spaces *c* appearing upon the sensitive film *a* after leaving said opening. The negative film is then shifted longitudinally with respect to the positive by causing the two films to follow paths of unequal length to a second exposure opening *t*, loops of unequal length being formed in the two films, as shown in Fig. 3. At the opening *t* the even numbered pictures will be printed in the blank spaces *c* but not in their proper numerical positions on account of the shifting of the negative with respect to the positive; thus in the example illustrated in Fig. 3 the 4th photograph of the negative will be printed on the positive between the 9th and 11th pictures and the 6th between the 11th and 13th, and so on.

970,614. F. L. Dyer and D. Holden, assignors to Edison Manufacturing Co. This is a companion patent

to No. 970,199, this patent containing seven claims for the printing apparatus, and the other patent containing two claims for the method of operation. The drawings and description of this patent are equivalent to those of its companion, which have been given in full, above. The claims of the patent read as follows:

1. In a photographic printing apparatus, the combination with a frame having a pair of exposure openings of means for feeding a negative and a sensitive film together aeross said openings, and means for causing the said negative and sensitive films to follow paths of unequal length between said pair of exposure openings, whereby one film is shifted longitudinally with respect to the other film between the two openings, substantially as set forth.

2. In a photographic printing apparatus, the combination with a frame having a pair of evposure openings of means for feeding a negative and a sensitive film together across said open-openings and intermittently bringing the same to rest at each opening, and means for causing the said negative and sensitive films to follow paths of unequal length between said pair of exposure openings, whereby one film is shifted longitudinally with respeet to the other film between the two openings, substantially as set forth.

3. In a photographic printing apparatus, the combination with a frame having a pair of exposure openings of means for feeding a negative and a sensitive film together across said openings and intermittently bringing the same to rest at each opening, said intermittent feed operating to move the two films at each step a distanee equal to the length of a plurality of adjacent pictures greater than one, and means for eausing the said negative and sensitive films to follow paths of unequal length between said pair of exposure openings, whereby one film is shifted longitudinally with respect to the other film between the two stantially as set forth.

4. In a photographie printing apparatus, the eombination with a frame having a pair of exposure openings of means for feeding a negative and a sensitive film together aeross said openings, and means for causing a longitudinal shift of one film relatively to the other a distance equal to the length of an integral even number of pictures between said pair of xposure openings, substantially as set forth.

5. In a photographie printing apparatus, the combination with a frame having a pair of exposure openings of means for feeding a negative and a sensitive film together across said openings, and intermittently bringing the same to rest at each opening, the feeding means being so arranged with relation to the films as to bring odd numbered sections of the films to rest on front of one opening, and moving the same past the other opening without stopping, and even numbered sections of the films to rest in front of the last named opening, and moving the same past the first named opening without stopping, substantially as set forth.

6. In a photographic printing apparatus, the eombination with a frame having a pair of exposure openings of means for feeding a negative and a sensitive film together aeross said openings, and intermittently bringing the same to rest at each opening, the feeding means being so arranged with relation to the films as to bring odd numbered seetions of the films to rest in front of one opening, and moving the same past the other opening without stopping, and even numbered seetions of the films to rest in front of the last named opening, and moving the same past the first named opening without stopping, and shutters for said openings, and means for operating said shutters timed to expose said films while the same are at rest only, substantially as set forth.

7. In a photographie printing apparatus, the combination with a frame having a pair of exposure openings of means for feeding a negative and a sensitive film together across said openings, and intermittently bringing the same to rest at each opening, the feeding means being so arranged with relation to the films as to bring odd numbered sections of the films to rest in front of one opening, and moving the same past the other opening without stopping, and even numbered sections of the films to rest in front of the last named opening, and moving the same past the first named opening without stopping, and shutters for said openings, and means for operating said shutters time to expose said films while the same are at rest only, and means for eausing the said negative and sensitive films to follow paths of unequal length between said pair of exposure openings whereby one film is shifted longitudinally with respect to the other film between the two openings, substantially as set forth.

New York Men Favor Censor

More than two hundred members of the Moving Picture Exhibitors' Association of New York City, at a meeting held some time ago, voted unanimously in favor of having a commission under municipal control to regulate the films which are shown. The purpose of the movement was indicated by D. M. Donegan, secretary of the association, who said: "Moral pictures can be enforced if the censors are authorized to take legal action against any exhibitors who fail to comply with the law. We would ask to have a law passed making it a misdemeanor to exhibit any pictures that have not the official O. K. of the municipal authorities. At present the board of censors only investigate part of the show and do not give attention to every one of the places in the city.

"The abolition of dark rooms is another suggestion which we believe should be carried out. Under the latest patents it is possible to give shows in auditoriums that are not entirely darkened. Experiments have shown that the pictures can be clearly exhibited on the screens where the rooms are light and airy."

The Moving Picture Exhibitors' Association has among its members the majority of the owners of the picture shows. After the members had passed their resolutions and decided on immediate action they said they would be guided in any of the future exhibitions by the proposed board, with full authority to make it compulsory to enforce the moral exhibitions.

Points of View

The South Dakota *Educator* recently urged the use of lanterns and projection machines in school work, and suggested that each school should have from $500 to $1,000 invested in a picture outfit, stating that "no better or more attractive means of interesting pupils in much of the school work can be found than a good lantern."

A London publication, *The Hospital,* advocates the use of the pictures for physiological purposes, describing laboratory work and scenes, and the like.

Mr. Richard Barry, writing in *Pearson's Magazine,* says that motion picture instruction is in direct violation of the basic principles of pedagogy, and can have no real place in the school. It takes all kinds of opinions to make a world.

St. Louis Exhibitors Fined

Fred Wehrenberg, proprietor of a motion picture show at 2217 Cherokee street, St. Louis, and A. Wittmann, who conducts a similar exhibition at 2816 Chippewa street, were fined $25 each for crowding their theaters until the aisles were obstructed. Their fines were stayed on good behavior.

The prosecution of the men is part of a crusade being conducted by the police against nickelodeon owners who permit the aisles of their houses to become blocked, thereby increasing the possible danger of fire or other disaster.

William L. West, an actor of the old school, now performing in a moving picture stock company, was asked the other day how many melodramas were going out on the road today as compared with before the moving picture boom. "How many are going out?" He smiled sadly. "Believe me, there are more coming in."

Some Questions Answered

By William T. Braun

In this department, answers will be given to questions upon any subject in connection with the conduct of moving picture exhibitions, the operation or construction of moving picture machines, the making f pictures or films, or any questions pertaining to the amusement business which can be answered without specific reference to any person or company. Questions are invited, and will be answered as promptly and as fully as possible.

ARC LAMP CONNECTIONS.

In connecting up the arc lamp on a moving picture machine which wire should be attached to the top carbon holder and which one to the lower? On which wire should the rheostat be placed? How are the best connections made?—H. S.

YOU do not mention which kind of current you are using, direct or alternating. If the current is supplied from an electric company you can find out which kind you are using by looking at the wattmeter. The kind of current is always marked on the meter with the voltage and amperage supplied.

If you are using alternating current it does not make any difference which wire you connect to the upper or lower carbon holder, as with alternating current the current flows back and forth from one wire to the other, causing a crater to be formed on both carbons. In alternating current either wire may be connected to the rheostat.

For direct current the positive wire should be attached to the upper carbon holder and the negative to the lower. The crater always forms on the positive carbon, and a point on the negative. It is from this crater that the light comes, and if this wire were on the bottom it would not form perfectly nor be on the front of the carbon. The crater must be as far forward on the carbon as possible so that it will face the condenser lens, causing a maximum of the rays of light to strike the lens. When using direct current it is customary to connect the rheostat on the position wire.

To distinguish the positive from the negative wire connect one wire to each carbon holder, put in a pair of carbons and turn on the light. After it has burned for ten or fifteen minutes turn off the switch and examine the carbons. The one on which the crater has formed is the positive, the one with the point, the negative. No damage is done in making the above test but you could not run your lamp that way.

In the matter of connections, if you are using a solid wire it may be attached to the lamp by stripping off about an inch and one-half of the insulation and running the bare wire through the hole of the binding post and tightening with the thumbscrew. If the wire is too large for the hole, as it usually is, wind it tightly around the screw, place a washer in front of the wire and tighten the screw.

If you are using a stranded wire the connections should be made with lugs, as it is next to impossible to force a stranded wire of the required size through the small holes of the binding posts, or to wrap it tightly around the screw. A tight connection can only be made with lugs. These lugs can be obtained from any electrical supply store or can be made. Take a piece of copper tubing with a hole slightly larger than the wire and about an inch and a half long. Flatten one end and drill a hole slightly larger than the screw on the binding post. Insert the wire in the other end of the tube, soldering it securely.

In making your connections always scrape the wires until they shine; make the joint and solder securely together, taping the exposed parts. When lugs are not used be sure that the connection is tight, as many faults can be traced to a loose connection.

* * *

KILLING THE GHOST.

Please tell me what causes the blue spot on the center of the screen? I have noticed it in several theaters. How can this be overcome?—Arthur N.

THE blue spot or ghost, as it is commonly called, is caused by the shadow or interference of the point of the lower carbon on the crater of the above one.

The upper carbon is usually tilted back away from the lower one and as they are consumed the lower one gets farther away from the upper carbon. Also in freezing the carbons, or bringing them together the ends of the carbon are forced outward, especially the lower one. When this one gets too far forward, or if the point becomes too long, it casts a shadow in the rays of the light coming from the crater, causing the ghost on the screen. To remedy this push the lower carbon backward until it is just a trifle in front of the upper one, about one-eighth of an inch. Between shows the point of the lower carbon should be filed off. If it becomes too long, besides causing the ghost it is liable to break the crater on the upper carbon.

It is a good idea to tighten the screws on the carbon holders, so that when the carbons are brought together the holders will remain rigid and not be forced downward, causing the ends of the carbons to be pushed outward. The lower carbon in all cases should be placed about one-eighth of an inch in front of the upper so that the crater will form on the front face of the upper carbon.

* * *

PROPER SPEED FOR FILMS.

About what speed should a moving picture machine be run? —M. V. W.

THIS is a very difficult question to answer, as some parts or scenes must be run faster than others. A good idea is to start the machine slowly so that the light can be centered perfectly before the title appears. This is made possible if enough blank film or header is attached to the beginning of the reel. Have one hand on the frame-up lever so that as soon as the title appears it can be centered properly on the spot, as most titles are short, and much precious time is wasted in centering your title on the screen.

If your machine is equipped with an automatic fire shutter the first few turns of the crank should be made quickly, otherwise the shutter will not raise at once, as it depends upon the speed of the crank for its action.

Some scenes require greater speed than others. For instance in an automobile chase the action can be speeded up, while in a procession you do not want to make the people run. The best thing is to use a little judgment of your own. It is a shame the way some of the films are run through the machine in order to get in three reels and two songs in a three-quarter-of-an-hour show. An intelligent audience would rather see two good reels

run at a reasonable rate of speed than three poor ones run so fast that the people fairly fly around.

On the other hand you cannot run the machine too slow if you are using an automatic fire shutter as it is liable to drop and shut off the light from the screen.

Most machines run a foot of film to each turn of the crank. If the crank is turned from sixty to seventy turns per minute the machine will run that many feet of film per minute. This gives you from fifteen to eighteen minutes for one thousand feet of film. For ordinary scenes this is about the correct speed.

Chinese Musicians for Chinese Pictures

Six Chinese musicians were among the attractions at a municipal concert in the Auditorium at Denver, Colo., recently. They supplied native music during the presentation of moving pictures, which consisted of views of China. The Celestials appeared at the entertainment at the invitation of Mayor Speer.

Conductor Bellstedt lost some weight in trying to teach the Chinese to conclude playing at the moment the pictures stopped. But musicians cannot be made over in a minute. It was necessary for them to play the piece to the end regardless of the pictures, which did not hold out as long as the music.

"One of the musicians had a fine dishpan," said Captain S. L. Phillips, commissioner of highways, to Mayor Speer. "He managed to make pretty good music out of it.

"I also liked that fellow who played a squeaky wind instrument. He was an artist. His music would have made a well man better. But the effect of the moving pictures was enhanced by the Chinese music. They haven't as many notes as we have, but they get there just the same when it comes to music."

The concert was one of a series in which Japanese pictures were given with Japanese music, Scotch pictures with Scotch music, etc.

Motion Pictures of State Fair

Secretary Brueggerhoff, of the Louisiana State Fair, is negotiating with the Industrial Moving Picture Company of Chicago with a view of having moving pictures made during the next fair, for the purpose of advertising the state's resources throughout the country at the various lands shows and other gatherings of a like nature.

The Industrial Moving Picture Company states that the pictures taken of the fair will be circulated throughout the country free of charge after the films are made, and as this cost is not very heavy, it is certain that this company will be engaged for the purpose.

It is the purpose of the State Fair association to have pictures made of the interior of the different buildings, showing the exhibits and the crowd of sightseers, and also pictures of the live stock and poultry exhibits. This will show the state fair just as it is, and will be one of the greatest methods of advertising the state that could be devised.

Another Minister Converted

"The church is no longer considered the gateway to heaven or the wall against hell. It has gradually become nearly as much an educational as a religious institution. I have tried stereopticon lectures, and they are as much out of date as the old style of preaching about the fires of hades. Now I am going to start showing moving pictures."

With this statement, Rev. Clark S. Thomas, pastor of the First Universalist church, Elgin, Ill., told of his plans to convert a part of the church into a place of amusement for his parishioners and the public in general.

Mr. Thomas has already secured a motion picture machine.

"When motion pictures first became popular," he said, "the nickelodeon was shunned by good people as a place of cheap amusement, where shows of a questionable kind were given. Today we have to recognize the moving picture machine as a great educator."

Milwaukee Regulations

Milwaukee moving picture theaters of more than one story are to be of noncombustible materials throughout, if an ordinance submitted to the city attorney is passed.

There are to be three exits and as many more as there are aisles. No more than ten seats in a row are to be allowed. Aisles are to be at least three feet wide and are to lead directly to doorways. No heating apparatus is to be allowed on the stage.

The booth in which the lantern is to be installed is to be made of two inch noncombustible material and closed except for doors and vents. All wires are to be in conduits. Draperies and mirrows are to be dispensed with.

If the ordinance is adopted it is to be part of the new building code. Moving picture houses now in existence are not to be affected materially, but all new buildings are to comply with the new provisions.

Moving Photographs

The oft-expressed wish to see ourselves as others see us has been granted by the invention or rather the adaptation of the moving-picture machine. The machine is of French origin invented by M. Lucien Rieffel, of Paris, and it brings cinematography within reach of the amateur. The machine does not aim at reproducing elaborate scenes, but it takes animated portraits, and thus enables anyone to keep a lasting record of his friends, not a rigid portrait, but one which gives familiar and characteristic gestures and with the very appearance of life. The outfit consists of two pieces of apparatus, the photographic and that for the direct inspection or projection of the positive discs, the succession of which produces the illusion of motion.

Theater Law Will Be Enforced

The chief state factory inspector of Pennsylvania, John C. Delaney, has announced vigorous enforcement of the act of 1909 relating to moving picture theaters, the constitutionality of which was upheld by the Supreme Court recently. The decision was handed down in the case of the A. L. Roumfort Company, managers of the Hippodrome, of Harrisburg, which brought an injunction suit to restrain Delaney from compelling it to widen its aisles, etc. Judge Kunkel refused the injunction and the higher court sustained him. The Hippodrome was ordered to comply with the original order, and Delaney says similar action will be taken everywhere.

"Getting Sister Married"

An Essanay Photoplay

THE work of the new Essanay stock company in Chicago has been productive of many excellent comedy and dramatic subjects during the last two months and the reputation of the Essanay company, as a producer of high quality comedy subjects, has increased to an enviable one.

Billed for an early release, "Getting Sister Married," is claimed to be one of the most humorous farce comedies in the list of photoplays by the new organization. With the usual close attention to the little things in costuming, in acting and very excellent photography this comedy is one of sterling worth and will undoubtedly find a place on the exhibitors' list of meritorious photoplays.

In itself the plot of the comedy will arouse many a hearty laugh. Adding to this the very excellent acting, with its sparkle of wit that is characteristic of the Essanay company's best work, the result is more than satisfactory.

In the story, Paul Harvey loves pretty Margaret Cameron and they have thoroughly resolved to get married. However, it has not occurred to either of them that Father would lay even a straw in the way of their happiness and great is their surpise when the old gentleman, upon being interviewed, shakes his head in a kindly and sympathetic way but firmly declares that the match cannot come off until (and of all the impossible things!) until Sister Jane, Margaret's elder sister, is married. Jane is a spinster and looks it, so the young people almost consider their case an hopeless one. Notwithstanding the fact that Señor Vacher, instructor of music to the Misses Cameron, is apparently sweet on Jane, and that there might be a possibility of marrying the spinster off to him, Paul sets about recruiting a number of bachelor club friends as possible husbands for Jane.

With the first young man he brings to the house he is not in the least successful; for the plainness of Jane does not appeal to the young sport, who endeavors to make a quick getaway. However, he is forced to spend two hours in the company of the spinster with the vain hope of Jane finding a way into the young man's heart. The plan does not succeed and Paul is forced to visit the club again and obtain others.

This time he selects three of them, one a fashion-plate dandy looking for an heiress, a fat man looking for a house-keeper and old Mr. Moneybags, bald-headed but with social ambitions.

The fashion-plate is permitted to try his hand first, but he so thoroughly disgusts the refined Jane with his abruptness that she orders him from the room. The fat man next tries his hand, but balks when Jane tells him to get on his knees. "I can never do it!" he blurts out. With a great effort he sinks on one knee and makes his proposal, but Jane will not have him.

Mr. Moneybags is the next try-out. He is very plain-spoken and tells Jane that all his fortune will be hers if she will marry him and he taps his pockets significantly. Jane puts him to work holding her cotton yarn and when she dismisses him an hour later he is very tired and has had quite an insight into the other side of domesticity.

Out in the hall the young people are amazed when the rich man returns and shakes his head at his ill-luck. Neither of the young people will stand for this and thrust him back into the room again to further court Sister Jane.

The Siege of Jane.

Jane Springs a Surprise.

Just now Señor Vacher returns, and when he learns that his dear Jane is receiving the insults of old Moneybags he dashes into the room and hurls the thunderbolt: "This woman is my wife!" Yes, and he produces the papers to show it, while Jane nods her head and gives the others their reasons for having kept the marriage a secret because of fear of parental wrath.

Of course, Father is apprised of the secret marriage of Jane to Señor Vacher, and readily gives his consent to the marriage of Paul and Margaret.

The comedy bits introduced by the four suitors to the hand of Jane are deliciously funny and ought to start a riot of merriment in any audience.

A newspaper report from Redlands, Cal., states that Redlands will be the seat of a new industry soon when John B. O'Brien, manager of the Essanay Film Manufacturing Company, brings his company of thirty persons and stage paraphernalia to Redlands, on their special cars, to pass three months taking pictures.

A location in the Santa Ana "wash," between Redlands and the mountains, has been selected for scenes of ranch and cowboy life.

Minister Lauds Films

Rev. Dr. Charles E. McClellan, pastor of the Fairhill Baptist church, in Philadelphia, writes to a Philadelphia newspaper in the following terms:

"I have been more or less interested in the controversy being waged against moving pictures by some of our ministerial brethren. I have no axe to grind, no interest that needs protection, no stock in any moving picture concern, but I am a user of moving picture films.

"I suppose I was the first clergyman in Philadelphia, perhaps in America, to use the moving pictures in strictly church work, for I began the use of the moving pictures with the invention, and I have continued to use the moving picture films to the present hour.

"I use from five to eight reels of pictures every week at our children's meetings (attended by 800 children), every Wednesday night. Two and three reels at our Saturday night gatherings, every Saturday night, three to five reels, and Sunday nights during the summer and at Christmas and Easter and all patriotic services.

"This has been extended over a term of at least ten years, so my experience is not altogether that of a novice. I want to say in justification of the moving picture agents that so far as my experience has gone, the pictures have been good and always told a story. Sometimes it was a funny story, sometimes a tragic one—sometimes a pathetic one—but always a story.

"The manufacturers of the films are business men and are not doing business for their health, and they know that an obscene picture is a bad business proposition. And, besides, before any picture is allowed to go before any audience it must pass the board of censors, who are supposed to reflect the public taste and requirement. Thousands of pictures never see the light beyond the clinic stage. They are turned down and destroyed, at great pecuniary loss to the manufacturers, and when a picture is allowed to appear it is not expected to please everybody.

"Tastes differ. There are those who would want all pictures to point to a prayer meeting, and if they were as dull as the ordinary prayer meeting there would just about as many go to see it. The pictures that I have seen depict life as it is—and more horrible scenes may be witnessed on the streets at any time than was ever shown to any moving picture audience.

"True, there are drinking scenes and gambling scenes and fighting scenes and theater scenes, and the characters present the things true to nature just as they appear.

"But the writer has seen ladies arrayed in evening dress so abbreviated as to lead him to desire to offer his overcoat. One friend was asked what the ladies had on. He replied, 'I don't know. I did not look under the table.'

"Nothing like that will appear in a moving picture. Card parties and wine suppers are still in vogue and are participated in by the members of some of our churches and some of our ministers will inveigh against a moving picture who would scarcely dare say anything about these other things.

"And, finally, if our good brethren will tell the manager of any moving picture parlor that a certain picture is demoralizing, and will present a good reason, I pledge that the picture will be withdrawn. I thank God for moving pictures and will continue to use them as long as they are made."

An Interesting Lighting Test

As the tendency at present seems to be concerned with getting a better light on the pictures, and to economize on the electric light bill, we give for the benefit of our readers the results of a careful test recently made for H. E. White and George V. Martin, of Los Angeles, Cal., through the courtesy of Carl E. Johnson, general manager of the United States Electrical Company, same city, who placed at their disposal his test room, together with the services of his foreman, and two helpers; also the necessary generators, motor, measuring instruments and other accessories required.

In this test a lamp taken from an Edison Type B machine, and five-eighths Electra soft-cored carbons were used. It was intended to use all leading carbons, but owing to the length of time taken they did not get that far, but intend to make further tests later. The lamp was connected to a 60-volt, 60-ampere direct current generator, without any resistance device whatever, and care was taken to be as accurate as possible in the measurements, and reliable instruments were used.

The start was made with 46 volts, and with the carbons separated one-fourth inch 32 amperes were used, but this was not satisfactory because the lamp had to be watched too closely, for as soon as they burned the least bit the lamp would go out.

Next, 52 volts, and the carbons separated five-sixteenths of an inch, gave 39 amperes, and when the carbons were brought closer together the arc would make a frying noise, and the amperage ran up to 45.

Next, 70 volts, and the carbons separated a good three-eighths of an inch, and 64 amperes was used. This amperage was too high for these carbons, as they would blaze noisily and burn long points, and it was impossible to control the light.

The next was to drop back to 59 volts, this with the carbons three-eighths of an inch apart, gave 46 amperes, and the light was controlled as easily and burned just as steadily, and it was the concensus of opinion that it gave a more brilliant and whiter light than it is possible to get from a 110-volt circuit with the use of a rheostat.

The lamp was kept burning for about one hour steady under these conditions, and everything worked perfectly satisfactory; then it was turned off and started repeatedly, and used just the same as if it were in an operating room under the care of an operator. The arc would burn for two minutes without any attention (feeding together of carbons), and then go out, and the carbons at that time would be separated about five-eighths of an inch, and the amperes would register 33.

This test was made to try out the idea of using a generator without any resistance of any kind, and it was demonstrated to the satisfaction of everyone present that it gave a superior light, and was more satisfactory from every standpoint than a resistance coil on a 110-volt circuit.

Photoplay Scenario Writing

By Robert Saunders Dowst*

WITHIN the last few years there has occurred so enormous an expansion in the motion picture business that the leading companies are searching high and low to unearth clever and original ideas. Three of these companies are advertising their needs in *The Editor*, while at least four others purchase scenarios. Five years ago the scenario writer was not; now he caters to a public far more wide and appreciative than that of the most successful magazine writer.

That the "photoplaywright"—to use a recently coined word—is very often a young and inexperienced writer, who has not yet succeeded in breaking into the field of periodical literature, is a fact, and the reason for this is very evident. One contributing circumstance is the ruluctance of a successful author to mould his plot idea into a scenario for an anonymous film, when he might work that same idea into a short story and thus —for of course his name will appear as the author of the tale—enhance his reputation. But even if the established writer does make a scenario, the apprentice has an equal chance of acceptance.

A motion picture scenario is a plot; a plot stripped of all the adornments which it wears in the guise of a short story. In it there is no description, no dialogue, no subtle character analysis, no accurate delineation of motive; it is but an idea, plain and bare, the skeleton of a story. Now anyone with a good imagination may easily fabricate an interesting plot. If that plot is written as a scenario by the inexperienced writer the chances of its being preferred to the work of the fiction writer are excellent, simply because it is and must be a plot of action and nothing more. The apprentice can conceive an interesting situation and work backward from that until he has his ideas complete. Picture scenarios deal, of necessity, with actions rather than with mental states and motives, and this limitation largely offsets the greater ability of the old hand in portraying and making use of mental complications. The scenario is physical rather than psychical, so that a lifetime of observation and varied experience is not necessary for its adequate treatment.

But if the same idea is written as a short story the advantage is all the other way. The fiction writer who has arrived possesses a delicacy and finesse in the handling of dialogue, description and character drawing which the unknown writer can not hope to attain save by long and diligent application. The magazine editor buys the work of the first, in preference to that of the second, because it is more artistically handled, and because the successful author has gained a reputation. Readers wait for and buy the magazine containing his work.

Although it has been said that the scenario is an unadorned skeleton, slipshod and careless work will not find acceptance. No scenario should exceed six hundred words, and it should give a short synopsis of the story before delineating the action scene by scene. Nothing that is not clear, concise, with all verbiage pruned away, and full of interesting situations calculated to grip and hold an audience, aside from the actors' interpretations of their parts, need hope to receive favorable consideration. Scene must follow scene in logical sequence; there must be no inconsistencies. The emotional progress must be steady, with the climax as near the end as possible. The scenario is a skeleton, but its joints must not squeak.

Scenario writing is much more than hack work. The writer who is ambitious to succeed in short story writing can receive no better training than that involved in turning out a certain number of these playlets each month. The editors of many periodicals are crying aloud for the story of plot. They wish neither tales of subtle character analysis, nor of tortured dialect. P-l-o-t, plot, is demanded, and the motion picture scenario is precisely that. Its basic idea is concealed by no witty dialogue, no vivid figure of speech, no tedious circumlocution. And the natural result of scenario writing is that the author who has been wasting postage to send out short stories which are built upon no plot whatever, through his scenario work will secure a grip upon the elements of plot complication which will enable him to erect a strong, symmetrical framework for his short story, capable of bearing the weight of dialogue and other adornments without making the disgusted reader wonder that so much is said about so little. In short, scenario writing will drill into the author's consciousness that one rigid necessity of the short story, condensation with the ultimate purpose of producing a single, premeditated and striking effect.

The scenario aids the short story, but to secure complication in the playlet itself is rather difficult. Practically there are but three methods: the actions of the characters, letters shown on the screen, and sub-titles. This makes it difficult to arouse interest in the audience. The best method is to be found by observing the best pictures. Then there is Wilkie Collins' slogan: "Make 'em laugh, make 'em cry, make 'em wait." Make each scene amusing, pathetic or thrilling, and use no risque ideas, as the latter will render impossible the sale of your work.

As to the actual payment for scenarios, the companies vary but little. Those soliciting manuscripts advertise ten to one hundred dollars as their rate, but it should be said that one-hundred-dollar scripts are few and far between. A fairly good comedy idea will command about twenty dollars, while a pure dramatic subject of the same merit will sell for a trifle more. This will not mean sudden wealth, but it is better than to sell a five-thousand-word short story to some minor publication for ten dollars or less.

The motion picture offers large rewards in itself for the beginner; it is a most excellent training in the fundamental laws of plot construction; and it is capable of high artistic development.

*From *The Editor*.

A board of censors to pass upon moving pictures and plays to be given in Oakland, Cal., theaters will shortly be introduced into the city council at the request of Mayor Frank K. Mott and Superintendent of Police Adelbert Wilson.

The board of censors will not be a paid body, but will work in the interests of the community gratis.

Recent Films Reviewed

An Eventful Evening.—Edison. This photoplay being based on a sensational, and in many respects novel incident, should have stirred more thrills than it does. The partial failure lies in a lack of dramatic suspense. In spite of the girl's precarious situation we know all along that she will be saved at the proper moment, for we see in every other picture or so an engine coming along with a squad of rescuers on board. The engine starts too soon, even before the burglars have made an entrance into the house. In other words, the forces of rescue are under way even before the forces of danger have started to operate, so there is little more left for suspense. Our fears are nipped in the bud, and all that remains is a lively, but not thrilling, interest in the girl's plucky performance. We cannot tremble for her; all we can do is admire. The producer is responsible for this miscarriage and ought to be cudgelled for it. In all other respects it is an excellent production—good plot, good acting, good settings, good photography—Edison style throughout. One incident is open to criticism—where the railroad operator writes down a telephone message. On the face of it this is absurd, although there is a technical reason for it, in that the audience must be apprised of certain facts. A more natural expedient should have been devised, however. The leading across gave a smooth and capable performance such as always comes from her hands. In the last scene, where the heroine's nervous tension finally snapped, she was particularly effective. It was a very good scene, by the way, in more than this respect. It provided an excellent conclusion for the drama, lifting one down easily from the climax, but with no suggestion of anti-climax; and the setting was notable in its realistic semblance of a young lady's bedroom.

The Girl in the Film.—Vitagraph. There is a novel idea in this photoplay and some comedy. The way the girl got into the film is ingenious and stirs a romantic tingle, and the courting scene amuses, though the episodes could have shown more variety. The morning-after reaction is both funny and true, and provides an ending that is far from trite. One scene—on the side-walk, where the hero runs after pedestrians and stares into their faces—seems strained and very nearly absurd. In most towns he would be arrested. Above all, it seems out of keeping with the character of the hero, who was a circumspect young gentleman, and never would have done anything to attract resentful attention. The part was taken by a well-known Vitagraph player who always assumes a phlegmatic manner and seems to have a boyish aversion toward showing emotion.

How Max Went Around the World.—Pathé. An ingenious plot that gives Max plenty of opportunity to display his comedy abilities. Too bad all serial characters cannot be as good as Max. He never wears out his welcome.

Gasoline for a Tonic.—Pathé. A rather foolish comic. There is no fun in making sport of a cripple. The thought of drinking gasoline is also repulsive. And using a baby for a brick-bat is pretty rough. There is a cruel kind of humor in such subjects that makes us wonder at the French. We usually think of their humor as witty and refined, but this is almost ferocious.

The Sailor's Return.—Eclipse. A mildly interesting performance not very novel or very vital. That the plot is old is no great objection, but it has been treated conventionally with only half-sufficient motives. The villain, for instance, seemed to act without any motive at all. The only way to account for his villainizing is to suppose that he was just naturally wicked, an abnormality. Worse yet, he was a bad actor. His gesticulations were absurd, and he played constantly to the camera. The rest were better and succeeded well in suggesting pleasant characteristics. The principal interest of the film lies in the last mentioned feature, that it shows a kind of people with whom we are unfamiliar. The story itself, being old and conventional, stirs only a tepid interest. Pictorially the film is of much merit, especially the scenes showing the sailing vessel. The photography is of Eclipse excellence.

The Dream.—Imp. A tense little photoplay, well-contrived and effectively executed. There is a dash of yellow in it—just enough to make it racy and fascinating—but so handled as to point a good moral. The acting is uniformly excellent, heightened to a semi-melodramatic pitch that is quite appropriate to the subject. The leading actress disclosed a new phase of her art. We are accustomed to seeing her in robes more or less girlish and ingenuous, but here, in the quite opposite role of a sophisticated rounder, fast and flashy, she was no less capable and complete. The peculiar nature of the plot allows her to assume the two different types of character both in the same piece, and the contrast is highly effective.

Jersey of the British Isles.—Eclipse. Scenes of ever increasing charm here pass before the eye, reaching a climax in the light-house picture, which is beautiful in its smooth, steady photography and luminous tints. Between Gaumont, Pathé, and Eclipse it is hard to award the palm for scenics. If Pathé stirs a more intellectual pleasure, the others certainly stir a more esthetic.

Heart of An Indian Mother.—Kalem. A drama of pioneer days, constructed from familiar elements, and working up to a thrilling climax. The audience seemed to be quite exercised over the peril of the two women and exclamations of excitement and suspense were heard on all sides—a sufficient indication that the film accomplished what it aimed to. A record ought to be kept of the number of Indians who sacrifice themselves (in photoplays) to save the lives or promote the happiness of white benefactors. The happy hunting ground must be well filled with such.

The Poor Sick Men.—Biograph. A jolly farce comedy done in Biograph style, which means that it is done well. The action is lively and the laughs are many.

Elda of the Mountains.—Nestor. This photoplay is so meagerly explained in the sub-titles that the plot escapes comprehension and the pictures become a sort of guessing contest as to what the action means. Obviously when one is puzzling over the meaning of the action, one is missing whatever dramatic pleasure the action may involve. Terse, sententious sub-titles, such as "The Other Girl," "The Other Man," "Disowned," etc., are all very well if the play explains itself, but this play does not. The motives of the various characters and the relations they bear to one another, are by no means obvious, and the result is perplexing. After a certain amount of perplexity one gives up and lets things go as they will. Not being able to fathom the meaning of the action we can only comment on the visual aspect of it, which seemed strained and melodramatic with too much "You shall pay for this!" and "Stanley Harrington, you lie!" Nearly every scene had a "Get thee hence!" Indeed these "Avaunts" and "Be Gones" were among the few lucid intervals of the performance. Some of the scenes were quite beautiful with regard to landscape—the first one especially, where Elda stood gazing over her beloved mountains. This idyllic picture led one to expect a play of higher quality than afterwards developed.

Il Trovatore.—Pathé. If the proof of the pudding be in eating, it must be recorded that the performance of Il Trovatore with Verdi's music was far from successful—at least in one case. The orchestra of Chicago's leading motion picture house stumbled through the score in a half-hearted, hit-and-miss fashion that, instead of aiding the effect of the photoplay, was a continual detriment and distraction. The usual repertory of accompaniments played with the usual skill would have been more effective. Whether the fiasco was due to the fact that the music was too difficult, or not well arranged for orchestral purposes (it was noted that the several members were all playing from piano scores), or whether the orchestra was inadequately prepared by rehearsal, we do not know. But it was a fiasco, and a distressing one in view of the fact that the performance had been looked forward to with pleasure and high expectation. It is possible

and probable that the piano alone under the hands of an efficient player would achieve the desired effect. We sincerely hope so. But this reviewer can only record with regret what came within his experience. Whether the performance was successful in other cases or not, Pathé Frères are entitled to a large amount of credit for their ambitious and wholly admirable undertaking.

The Battle at Redwood.—Pathé. An Indian subject rather well handled in the large groupings, that is, the Indian uprising and the flight of the settlers; but the piece lacks a specific and sustained interest. It would be hard to state just who was the central figure. Surely not the purring minister, though he was the most conspicuous and the best actor, nor his niece, nor her lover, nor the man who got scalped right away. Possibly it was the grateful Indian, whose death formed the denoument, but that was the only interesting thing he did, and our sympathy is therefore purely posthumous. The piece lacks a central figure and a vital, sustained interest, and falls just that far short of perfection.

The Man in 23.—Nestor. A really unusual comedy. It contains the old chase, but it is done in an exceptional manner that is not only funny, but interesting, owing to the novelty of treatment. There is rather more of a plot to this film than is usually found in comedies, and as a whole the Nestor people are to be congratulated. The photography is good, and more comedy productions of this kind would be appreciated.

The Bridal Trail.—Nestor. This film shows evidence of padding; the action lags along and is saved only by the ability of the actors. At times the actors rise to considerable heights of excellence, and are quite good throughout. The plot has a melodramatic bent, and one of the motives is decidedly strained, that of the elder Boardman; it is hard to believe that a father would so despicably malign his son. Scenically there is much beauty in the film, and the pictures disclose some first-class photography. These two features combined with capable acting make on the whole a presentable reel. It would be better, however, if shorter.

Buddy.—Selig. An unpleasant photoplay compounded out of dark morbid elements, such as death, poverty, drunkenness, moral weakness, physical disablement, marital infelicity, accidents, ambulances, hospitals, saloons, etc. And there are various dramatic sins such as improbability and far-fetched coincidence. There is no objection to using these dark unpleasant elements if they are used truthfully and for moral purposes, as the Biograph company often does, but here they are used conventionally and only for whatever sensation there is in them. The boy's crippled leg, for instance, was inexcusable. It had absolutely nothing to do with the story, and was obviously thrown in as a cheap bid for sympathy. Several years a o we used to get a great many picture stories of this character full of cheap morbid conventional sentiment, but we thought that day had passed. It is distressing to see Selig take such a backward step.

Bertie's Bandit.—American. The turning of the worm is here drawn upon for plot purposes, with very good effect. When Bertie turned upon the bullying bandit there was something indeed doing, and the audience showed its enjoyment right out loud. The fight is enacted with much vigor and many real blows, and carried complete conviction. The episode is perfectly plausible too, though one might not think so to hear it told. Good acting and good stage managing accomplished the good effect. It is a virile, stirring comedy, thoroughly enjoyable.

The Black-Bordered Letter.—Edison. If a chain is no stronger than its weakest link, we should say this was a weak chain of events, because it contains one very weak link. It is an important link too. We refer to the fact that the writing on the letter was in invisible ink. The writer explained the peculiar fact by saying that she "happened" to have the invisible ink with her. But that is surely a most strange happening. How many young ladies starting on a short journey take the precaution to provide themselves with a bottle of invisible ink? Very few, we believe. So few that it renders this instance very improbable. As the detective's operations hinged on this letter, it must be said in all truth that the story is far from convincing. But overlooking this detail the rest is fairly plausible as detective stories go, and worked out in good style. The hospital episodes are especially satisfactory owing to the excellent simulation of insanity on the part of the leading actor, and to the very realistic appearance of the hospital corridor. The settings are commendable for their richness and depth. This attempt to photoplay a detective story is interesting, but not so successful as to warrant a landslide in that direction.

The Spy.—Selig. One of the best southern productions ever seen. The settings are really typical of the old south "befo' the wah"—so real that they appear almost novel and, to that extent, educational. We had read, for instance, of the slave who stirred around the dining table with a long mop-like contraption to shoo away flies, but we had never seen it. In this film we see it, and many other truth-telling details as well. The old darkies are so good—evidently the real thing, yet perfect actors without a touch of camera-consciousness. The story is not so exceptional as the production, being a spy-drama of well-worn type. The incidents are handled circumstantially, however, and productive of much dramatic effect. But the best part of it is the southern atmosphere, and that will linger long in memory.

A Sin Unpardonable.—Essany. The story of an unpardonable sin that was pardoned. The ending of the film belies its title. But that is an objection to the title, not to the film, for the ending appears appropriate enough and entirely convincing. The Essanay company skimmed the edge of greatness with this film, but did not quite touch. The story is simple and powerful; the emotions are strong and true; the acting is good and the production excellent; but one pestiferous little flaw crept in and threw the drama into partial eclipse. This occurred in the fight scene, the climax of the piece. The hero has defeated the villain, even more effectually than he had intended, for he rises from the prostrate form exclaiming "My God, he's dead!" and begins to tear his hair in consternation and remorse. But the villain is still breathing, heaving rather, as full and deep as would any man who had just been through a tough tussle. The discrepancy brought a murmur from the audience; as one man disdainfully expressed it, "There he is, breathing like a horse!" No scene can suffer an attack of skepticism like this and not come out of it weaker. More is lost by such a little flaw than many a perfect scene can build up. The writer of these reviews is no stickler for little points of realism so long as the main effect carries conviction; but here the deficiency is too obtrusive, seriously detracting from the good effect of the scene by making the hero's remorseful frenzy appear absurd. The faulty circumstance was preventable and therefore censureable. It is too bad that little faults like this have such a large nefarious power. They are like the horse-shoe nail for want of which a battle was lost. Because we have dwelt rather long on this point, we do not mean to infer that it cast a blight over the whole drama. Far from it, for it is a very good drama. But the faulty detail did put a weak spot in the very heart of the piece, and deprive it of much deserved honor.

A New Motion Picture Magazine

As announced in the Nickelodeon of December 15, a popular magazine for film fans is about to be placed on the market. It is entitled "The Motion Picture Story Magazine," and sample copies of the first (February) issue have been submitted to the trade. It is a handsome magazine containing 115 pages of reading matter, with a few pages of advertising. The matter is devoted to short stories based on plays released in the past, with copious photopraph illustrations taken from the original productions. There is also some attention given to personalties connected with the photoplay industry. The magazine will be issued monthly, is intended for circulation among the general public and will be sold through the agency of themotion picture theaters, price 15 cents. It is to be hoped that the public will warm up to this new bid for favor.

Of Interest to the Trade

By L. F. Cook

New York Letter

'Tis rumored of Muggsy McGraw that he once asked an umpire what would happen were he to call the umpire a thief, etc. Whereas the ump replied that he would fine anybody who called him pet names. However, upon learning that it was not a finable offense to think the same things, the astute Muggsy said, "Oh! well, let it go at that."

Far be it from us to say that the heads of the editors of New York daily papers are adamant. We wouldn't say such a thing for the world, but then our thoughts on this subject are not for publication.

John Collier, of the National Board of Censorship, made an address before the Children's Welfare Meeting last week, in which he told the meeting of the efforts that the Board of Censors was making to better conditions in moving picture theaters. Next morning the New York *Times* announced that John Collier was going to attack the picture shows. This is only one of many attempts of the New York press to discredit moving pictures, and the trade sits supinely by and says nothing.

Everybody who knows Mr. Collier and his efforts in behalf of motography will know that such an article is not correct; but what of the general public, which knows nothing of how the truth is garbled, and sometimes edited entirely out of an article?

It is the same old situation that has been gone over several times before. A number of civic organizations have united into the Conference on Motion Pictures. This conference is urging the board of aldermen to create a committee to investigate moving picture conditions, with a view to bettering conditions in the theaters.

The laws of New York are such that a moving picture theater seating three hundred or more must be built as, and classed a theater. The proposed house may seat three hundred and one or five thousand and one, but the rules are the same. Under three hundred the place is a "place of public gathering," and is governed simply by the building laws. At first blush this seems to be to the advantage of the moving picture industry, but it is not so. A house seating two hundred and ninety-nine is at best a small proposition and cannot afford much in the way of decorations, lighting, ventilation or equipment, to say nothing of a high grade film service. Yet, to build a house to seat five hundred or seven hundred, requires just as expensive a structure as one to seat five thousand.

The theater men are anxious to be able to build medium sized houses and present their shows in a safe sanitary, well ventilated theater. They are working with the conference to get the laws changed to allow this. Not much of an attack in that, is there? Yet that is the subject Mr. Collier was speaking on.

Other reforms the conference is urging are improved lighting and ventilation, and a control of some nature over the cheap and undesirable vaudeville seen in many picture shows.

Commissioner of Accounts Fosdick has been carrying on an investigation of his own, which also is preliminary to changing the existing laws for the benefit of the exhibitors, and it is to be hoped that these two movements will finally evolve a good adequate regulation of simon pure picture shows.

Of the coming releases, there is one that ought to be of special note. We refer to Edison's "The Doctor." 'Tis said of this film that it brought tears to the eyes of the men on the Censorship Board. This is one of the most lavish compliments ever paid any film.

Arthur W. Marvin, a brother of H. N. Marvin, vice-president of the Biograph, died in Los Angeles, on January 18. Mr. Marvin had been for many years connected with the Biograph Company, which will miss him sorely. His age was 53 years.

Joe Marentette, of the Consolidated Amusement Company, Baltimore, was in town last week. He didn't seem to enjoy himself as is his usual habit. He was ill at ease, continually fussing, and had a vague, far-away look in his eyes. This worried his friends, until some highbrow remarked that Joe was only thinking of that new baby of his.

Another independent company has sent an expedition to foreign shores. Will Steiner has taken a company consisting of fourteen actors, a scenic artist, and a camera crew to Bermuda, Jamaica, Cuba, etc. Mr. Steiner expects to return in about two weeks, but the company will remain in those countries for a couple of months, at least. In the meanwhile the Yankee still has two companies working in and around New York.

Ad. Kessel has left for a two months' trip to the coast. It is understood that the trip is more in the nature of a pleasure jaunt that anything else. Kessel has been working hard a couple of years now, and feels that a little vacation is due him.

Joe Engle has gone out to capture standing orders for the Rex. That is, he hopes to capture the orders and tame them into nice standing orders that will be completely housebroken, and will eat right out of his hand.

We are in receipt of a poster from the Vitagraph company, containing pictures of the actors of that company. Accompanying this was a letter announcing that any of these could be had by mentioning the one wanted, and sending along the necessary stamps. We looked over the flock, trying to decide; didn't want a man and didn't dare to select any of the charming women. Finally at the lower right-hand corner we saw a picture of "Jean" that looked awfully good. This group is really a notable one, and we hope to see many of these photos displayed in the lobbies.

An Argument for Cleaner Films

Another of those interesting little trade editorials which emanate occassionally from the pen of W. A. Daniels, president of the National Waterproof Film Company, has appeared under the title "An Argument for Cleaner Films." Mr. Daniels' logic is so convincing that we reprint his letter without apology for its advertising character:

No man in the film business will claim that the future of the industry depends upon exhibiting the *poorest possible films*. On

the contrary, all will agree that the very foundation of the business rests upon showing the *best possible films.* All manufacturers are so strongly impressed with this fact (consciously or unconsciously) that not one of them would hesitate to add an extra cost of a thousand dollars, if it would better a poor "release" and make it *the best.*

So much care, study and expense is lavished by all manufacturers in making *the best films,* that I believe we can accept as a premise "that the first runs of all makers are the best possible films." This being true, it follows that subsequent runs are *not* the best unless they are as soft and pliable, as clean and rainless, and in the condition of first runs in all respects. The well known fact that they never are in this condition removes all sophistry from our premise, which may now be strengthened to read, "The only best possible films are the first runs of all makers."

Few in the business ever stop to consider that these "best possible films," these "first runs" of all licensed makers *represent less than 5 per cent of the licensed pictures exhibited every week.* Think of it: 5 per cent best and 95 per cent near best, worse and disgusting!

Is it reasonable to suppose that the approbation of a critical-growing public can be continued, with these percentages for their money?

Is it good business judgment which lavishes thousands and thousands of dollars in making the best possible first run films (5 per cent), and does nothing towards preserving them in good condition for subsequent runs (95 per cent)? Isn't it a good deal like the cow that released every day a large pailful of milk, and then carelessly kicked it over?

Some manufacturers may argue that having made a best possible "first run," it belongs to the exchange to take care of it for subsequent runs. Yes, but manufacturers must furnish films which can be taken care of, and further than this, they must insist that they are taken care of, just as the Patents Company now insists upon the return of all films in seven months, because they have not been taken care of.

An exchange, ambitious to have clean subsequent runs, can today, I grant, have them renovated in gasoline, alcohol, or some volatile fluid with good temporary results. But all fluids of this nature are heating, and burn up the glycerine in the emulsion. A few cleanings of this kind usually make a film so brittle that it is no longer serviceable. Besides, the expense of renovating, the time out of service and the unreliability of the average renovator, will cause exchanges to put off cleaning until, in some cases, their films are past redemption.

The gentlemen who comprise the head of the film industry are the manufacturers, and they should be just as vitally interested that the public be shown *the best possible subsequent runs* as they are that they should see *the best possible first runs.* The first step towards better subsequent runs lies in greater care and cleanliness. The way to this is for the manufacturers to supply films which can be periodically cleaned, cheaply and quickly, right in the exchange, and with nothing more injurious to the film than soap and water. This of course means waterproof films.

There is some diversity of opinion as to how often a waterproof film should be washed, some claiming that once in six or eight weeks is sufficient, others think once every week or ten days is better, arguing: "If a film is cleaned every time a little dirt gathers on it, much dirt can never accumulate."

The unprejudiced study of business conditions in any line, will prove that no profitable permanency can be expected with 5 per cent best goods and 95 per cent bad and daily growing worse.

Analyzing the film business shows the need of a better condition of all subsequent runs. Waterproofing, systematically applied and intelligently followed up, is a means to that end. It will add to pliability and clearness, eliminate "rain" and do more to beautify and popularize the moving picture business than any other one thing available.

The commentory seems obvious that when, in the public eye, a first run film of one maker is compared with a commercial run film of another maker, the former suffers. And the public knows nothing about "runs." It only knows that it saw a good film and a bad one.

Motion Picture Ethics

The motion picture industry has never been treated seriously enough, says Thomas Clegg in the *Kinematograph.* The mildest dreams of a decade ago were considered wild and impracticable; the roseate prophecies of those days were scorned and ridiculed. The one-time jerkiness, the picture headache, and the thousand and one objections to general adoption were sufficient, ten years ago, to scare any financier except those accustomed to deal with wild-cat ventures. Kinematography was considered a passing craze; a short life only was predicted, and the fanciful imaginations of enthusiasts were laughed at.

As the idea of the founders gained strength and power, the possibilities became probabilities, and, gradually, probabilities changed to certainties. Marvelous strides were taken. Five years ago, a proposition for raising means to equip and run two or three hundred theaters under one general management would have met with few takers. But now—issue a sufficiently enticing prospectus, and the public will furnish the means to open one—ten—a hundred palaces de luxe. London alone now possesses five hundred exhibitions for the display of motion pictures, out of three thousand distributed throughout Britain.

Why is this? How comes it that the same public which would, ten years ago, have closely buttoned its pockets against the wiles of the motion picture exploiter, has since disgorged millions of dollars to foster the industry? The answer is at once apparent: By reason of the inherent power of motion pictures, the industry has attained a position of such commercial importance that confidence as to the future is firmly established.

This confidence may, in the near future, be shaken a little, and it may here be prophecied that great and drastic changes in the exhibition world are imminent. The close of the year will see a powerful and important amalgamation of forces now owning and running picture palaces throughout the country. Some of the companies have been too enterprising, too ambitious, and now find that though the demand was—and is—great, the supply has been—and is—perhaps too forced in certain localities. Consequently, overlapping is to a large extent apparent, and the distribution of exhibitions is not evenly balanced. Time and experience will, however, rectify this weakness, but not, it is feared, before some fingers have been burned in the process. It will be another instance of the survival of the fittest.

Originally controlled for entertaining purposes solely by a few ardent spirits—not necessarily bibulous—the permanency and prosperity of the new art was asserted; adventurers sailed in with capital and more or less knowledge; the demands of music hall frequenters were insistent and managers saw their opportunities—but this was only in the incipient stage.

Serious-minded men who saw in the new movement a great artistic development which would place it on a higher plane than that of the entertainment platform, felt their way, some at a risk, others at a loss, because they anticipated; a few held their own and, by sheer pertinacity, built up for themselves enviable futures. The Edisons, the Urbans, the Eastmans and others supplied the genius and improved upon mechanical and productive means of their own invention, which the Wests, the Spencers, the Howes

and other noted exhibitors of every country made opportunities to utilize; but still the more important fields for the full utilization of kinematography were unplowed. Entertainment, pure and simple, was the order of the day. The sun of progression, however, rose, thanks to the consistent efforts of a very few fathers of the craft.

"I hung my hat on the educational peg over ten years ago," said one national benefactor in the ranks of exhibitors to the writer, "and there it will remain until I pass altogether out of the field of the kinematographic lens. The art is acknowledged now as a prime factor in amusement; but its position, and the profits accruing from its adoption, are as one to twenty of what they will be when the day of universal acceptance of kinematography as a means of education and enlightenment has dawned, and those on the watch towers of progress report that the clouds of opposition are gradually dispersing in every civilized country."

That the industry is making phenomenal headway is daily proven by its scope-enlargement in every branch of manufacture and display, in which millions of dollars are invested, hundreds of thousands of people find remunerative employment and which affords gratification to countless numbers of people, white, yellow, brown and black, as is hourly demonstrated in every civilized and semi-civilized country of the universe. Emperors, kings and rulers, in common with the meanest of their subjects, enjoy scenic reproductions of the sublime and the beautiful, laugh heartily at the same absurd incidents—we were going to say that they also mingle their tears over the same touching and pathetic episodes, until we remembered that the line for monarchs must be drawn somewhere.

Much remains to be accomplished before the industry, science, art or craft—call it what you will—is placed upon a dignified footing worthy of its merits. So far, the field, with a few noteworthy exceptions, has been occupied and held by those interested, first of all and all the time, in the exploitation of kinematography solely as a rapid means of money-making. They have worked hard for success, and have succeeded. Knowing what the public wanted in the way of amusement, they provided subjects more or less fit. Errors of judgment in the matter of catering for the popular or national taste have been to a certain extent corrected and, on the whole, the most critical audiences have little fault to find with a program wisely and thoughtfully arranged for their delectation. One has only to study their advertisements to discover that the efforts of these men are remunerative. The renter buys—no doubt discriminately—on the cheapest terms at which pictures can be secured, and charges the exhibitor as much as he thinks he will pay. But the lamentable cutting of prices has been the principal drawback to a full and general measure of success. Renters have only themselves to blame for the absurd returns they exact in many cases from the exhibitors, their own profits having diminished pro rata with the descending charges. To maintain their positions at the head of the hiring fraternity—every renter is the "head"—they cast about for means of "making good." Happy thought! Discount from the manufacturer! The poor manufacturer!

Only a short time ago the writer of this article met one of the principal renters of London and inquired how things were moving.

"Very well," he responded. "But we can't do much business with your firm."

"A matter of discounts, I suppose?" was the reply.

"Exactly," he retorted. "You don't allow any, so we go to manufacturers who do."

Now, what is the situation? Except in very rare instances a charge of fourpence a foot is made for films. Cost of production varies, as everybody knows; but no more is paid for a film upon whose acquisition a small fortune has been ventured than is charged for a subject secured in the maker's back garden at no expense whatever beyond the cost of raw material. Whether the motion picture be sent from China or Coventry, from Rhodesia or Rochdale, its price must not exceed the standard.

Apply this principle to that of any other industry and see how it would work. Offer a draper so much a yard for every length of silk ribbon in his shop, regardless of quality—your custom would be declined. Ask your fashionable tailor to sell you a dress suit for ten dollars, because you can buy one of serge ready made at that price—his response would be forcible, but convincing.

The only deviations from the one-price rule are those of some sporting subjects which carry heavy royalties, and hand-painted productions which require expensive treatment.

The makers, then, are bound by custom to the set price; but some of them, to extend their business, inserted the thin edge of the discount wedge in order to secure the bulk of the renters' orders. Five per cent was granted by Jones; Smith thereupon allowed seven-and-a-half; and Brown, determined to be in the running, gave ten per cent less two-and-a-half for spot cash. Jones, Smith and Brown cannot, with any possible margin of profit, produce subjects which involve great outlay at the price; they cannot afford to pay for privileges, or to secure the services of first-class mimes, or to fit out ventures into unexplored regions, or to remunerate any but second-class workmen. They simply cannot. But they can—and do—secure very fourth-rate comic and dramatic talent, and by utilizing every cheap means to their hand, produce film subjects which are often a shame and a hissing to any cultured audience.

The renters require regular film supplies and go to the manufacturers—the aforesaid Jones, Smith and Brown, leaving severely alone the makers who balk at discounts but produce the best class of work. Who suffers? The makers? No. The renters? No. The exhibitors? No. The public? Yes. The industry as a whole? Yes.

The exhibitor would like better goods. He knows that a superior article is produced, but only once in a while does his renter supply a really commendable film. The others pass muster. Comics, so called, raise a laugh by reason of their very absurdity; the dramas tell a story of love, or passion, or infidelity, or drunkenness. But those of genuine, soul-stirring merit or clean, wholesome fun, well thought out and admirably reproduced by accomplished actors—well, the renter wants ten per cent discount from the net price, and his offer is not entertained. He writes to the long-suffering exhibitor: "Sorry. But the makers of the film you require have sold out the stock. No more prints available. Am sending you something equally good"—or words to that effect.

The audiences? They take the goods provided,

with varying expressions; chiefly tolerant good nature, occasionally disgust, but always with a longing for something better; something approximating to the class of the pictures they see at the Palace theater, or at the Alhambra, or the Empire, or at West's, or at any other high-class exhibition where good net money is cheerfully paid for pictures which are *sans reproche* either as regards quality or subject; pictures which can be enjoyed, fun which really exhilarates, drama which appeals by reason of its realism and verisimilitude; pictures into which no consideration of discounts have entered. Failing this, the general idea of the mass is one which, to say the least, does not convey a very flattering impression of an art of which they read so much, but see so little to commend.

The margin at the manufacturer's disposal between cost of raw material plus expense of production, and the price per foot net is small if he produces the best possible pictures. As he is not in the business for philanthropic reasons, if he allows any discount something must go; and as the discount represents the money he would otherwise have expended in improving the quality of his pictures, and in paying the first-rate prices which first-class talent and workmanship will always command, his renter patrons must, perforce, rest satisfied with inferior pictures, plus the discount they insist upon.

A readjustment of the whole system of supply and demand is vigorously called for, if the industry is to occupy the higher plane of which we spoke at the beginning of this article. There is no question of either supply or demand; the one exists, and the other is insistent.

The Show Man's Soliloquy

To change or not to change, that is the question.
Whether 'tis better with this service to suffer
The delayed shipments and lack of posters promised,
Or to jump to that new fellow who has everything on earth,
And even more. To quit our present exchange and
To move; and by that move to say we end
The rainy films and eke the broken song slides,
This company's heir to—'tis a consummation
Devoutly to be wished. To settle up, and change;
To change, perchance to worse! Ay, there's the rub!
For with that other firm what ills may come
When we have given up our present reels,
Must give us pause. There's the respect
That makes this picture biz so hard a life;
For who would bear the troubles with this firm,
The song girl's talk, the shipping clerk's excuse,
The subjects switched about, the booking man's deceit,
The heavy burden of the every weekly bill,
(That always ever is too much).
When he himself might a quietus have
With other film suppliers? Who'd struggle on in poverty
But that the dread of others, no matter where
Those unexplored promises which are made
As blithe and unrestrained as song of bird;
The thought of worrying even more puzzles the will
And makes us rather keep that which we have
Than change to others that we know not of.
Thus film exchanges doth make cowards of us all
And thus the happy thought of ideal service
Is sicklied o'er with thought of broken guarantees
When enterprising salesmen have booked our order
And broken boxes bring repeaters oft,
While we dare not bring action. Leroy T. Goble.

Sunday School Pictures

Rev. Roy Postlewait, Kansas City, Shows Pictures in Church

"Those who do not go to Sunday school will have to pay an admission fee of five cents. This arrangement was made, not as 'a leap in the dark' or an experiment, but for the good and sufficient reason that many mothers will not 'take the trouble to get their children ready for Sunday school,' and this makes it necessary for us to cause some disturbance in the family by throwing out the extra inducement to the children that will make them help themselves and insist on mother doing her part. The scheme works. It has the advantage of giving us two hours a week with four hundred children, instead of one hour a week with two hundred children, and by the aid of the pictures we are able to make impressions on their minds that will be of lasting value. The children talking to their parents and others about what is going on at the church attract their attention in that direction and increase the attendance at every service," he says.

Censor Bill in Kansas City

The following ordinance has been introduced in the city council of Kansas City, Mo., by Alderman Askew:

Section 1. No person, firm or corporation shall be allowed within the limits of the city to exhibit, gratuitously or for hire, moving pictures of any pugilistic combat between contestants of the Caucasian and negro races, respectively, nor to exhibit moving pictures of any highway robbery or attempt at highway robbery, or theft or attempt at theft, suicide or attempt at suicide, elopement or attempted elopement, shooting escapades of any kind, dagger or stabbing affairs, indecent or suggestive scenes of any kind, nor shall any person, firm or corporation advertise or sell tickets for any such exhibit or exhibits. Such exhibits are hereby declared to be nuisances.

M. P. Show in Old Landmark

The old Clinton street courthouse, between Grand and Broome streets, New York City, which is owned by the city, has been leased to the proprietor of a moving picture show.

The old building is one of the landmarks of the east side. In 1820 it was occupied by the Volunteer Fire department. Later it was transferred into a civil courthouse.

Expressions We Frequently Hear

"Missing His Frame."

Synopses of Current Films

From the Manufacturers' Bulletins

Nestor

THE TRANSGRESSOR.

"The way of the transgressor is hard," and indeed none felt this more keenly than Jim Collins, only survivor of the Collins-Clayton feud. Forced to flee with but a hurried farewell to Mary and the baby, the marked man had remained in hiding for four years. Then, prevailed upon by the pleadings of his sick wife, he ventured home only to be captured almost upon the threshold of his cabin. Beyond the closed door, Mary Collins lay dying, while little Regina was being given to Colonel and Mrs. Clark for adoption. Fifteen years passed. Jim Collins had become a trusty in the prison, while his daughter, now known as Regina Clark, had refused her various suitors, among them the family lawyer, Victor Mills, for the jolly young Lieut. Walter Warren. Hoping to obtain some valuable information for a case which was to be reopened, Victor Mills called at the state prison. Here, he was taken in charge of a trusty and later turned over to a guard. As the lawyer returned to the office, however, he discovered that his hat and coat were missing; for Jim Collins, taking advantage of the warden's absence from the room had slipped them on and made good his escape. Two months elapsed, then, as Mills passed a small country store, he came face to face with Jim Collins, the trusty who had shown him around, and later gotten away with the aid of his coat. Mills' first impulse was to inform the authorities; then a picture of Regina and the successful lieutenant arose in his mind. He knew that the girl was adopted and that her father might still be alive. Now if this convict could be made to represent himself as her father, he believed that Lieutenant Warren would hastily withdraw. Hurriedly following Jim to his cabin, the lawyer gave the wretched man his choice; and as a result, the next day found them at Colonel Clark's home breaking the news to that unhappy family. Reluctantly Jim forced himself to read the letter Regina's mother had left for her husband, only to find that it had been written by his own wife, imploring him to keep their child in ignorance of his past. Glancing at his weeping daughter, the father realized that Mary had spoken wisely. Crossing quietly to the table, Jim wrote: "I am not your father—I have lied to you." Then with one last look at the girl, stole silently from the room, and ere sun-down presented himself at the warden's office, content to finish out his prison term rather than disobey his dying wife's commands.—Released February 8.

Pathé

THE ESCAPE FROM THE TUILERIES.

It is the Reign of Terror in France, and the deadly work of the Revolutionists has begun. The Tuilleries are menaced by the mob, and Madam Elliott sits writing a warning note to her friend, the Comte de Champcenetz, who is the governor of the palace. The ink is not dry on the paper, however, before the Comte comes to tell her the latest news and perhaps to make his last adieu to her. Madame Elliott begs him not to return to his post, but Champcenetz cannot, in honor, yield to her entreaties. He returns to the Tuilleries and for eight hours directs the resistance against the mob. At length the populace fights its way into the palace, and the King and Queen and Dauphin are made prisoners. The palace is looted, but Champcenetz, who has fallen exhausted beneath a piece of furniture during the last few moments of resistance, ultimately escapes by a secret way, garbed in the clothes of a dead republican. Outside the palace he is recognized by a woman of the people, but she, more compassionate than her cirago sisters, shields him. So a few days later the Comte, half dead with exhaustion, steals back to the residence of Madame Elliott. She and her maid give him food and drink, but he has scarcely tasted either before cries and shouts are heard. It is the mob and police, who have come to make a search in pursuance of the decree of the National Assembly that no shelter is to be given to an aristocrat, death being the penalty. Discovery seems inevitable, but Madame Elliott, determined to make one bid for the life of her friend, hides him beneath the mattress of her bed and quickly unrobes, whilst her maid goes to give admittance to the police. So when the police enter all they see is a beautiful woman in bed, apparently just awakened out of her sleep. Their drastic search results in nothing and they depart perfectly satisfied that no aristocrat is in hiding. The moment they have gone. Champcenetz is released from his stifling hiding place; he is quickly dressed in a postillion's uniform, then Madame Elliott's carriage is ordered, and with Champcenetz on one of the horses a start is made for the frontier—a woman's courage has saved them both.—1,000 feet. Released January 30.

HEARTS, HUNGER, HAPPINESS.

Billy is in love, but he thinks he's sick, so he calls in the doctor, who quickly recognizes what is the matter with the lad. Thinking that it will not do any harm to scare him a little, the doctor tells him that he must fast for three days. This Billy does faithfully and grows hungrier by the minute. On the third day he gets a note from his sweetheart asking him to attend a birthday party. He goes, and what is his dismay to find a great dinner awaiting the guests, which he, of course, cannot eat. Rather than alarm his friends, he puts his food in his pockets, and, when these are full, into the pockets of his neighbors. How he gets in trouble with the dog Dooley and is found out and pardoned is too good to tell.—722 feet.

PRACTICAL BROOK TROUT BREEDING.

This is a film of exceptional interest. Full descriptive titles have been used in its composition and a clear understanding of the pictures is thereby gained, a fact which considerably augments the value of the film. These titles are given in the following order: Fishing for reproductive subjects; Selection; Installation of the incubator; Collecting the eggs; Fecundation of the eggs by the sperm; the spawn is washed to extract all impurities; It is laid upon trays made of osiers; The sterile eggs are eliminated; The germ of the future trout appears after twenty-five days; For a month the young fry derive their nourishment from a small sack, called a vitellus, which appears on the under part of the body; The food of the young fish is composed of liver which is first grated and then passed through a sieve; The first meal of the fish after the disappearance of the vitellus; Proportional size of the fish; after three months; Six months; One year; Two years; During all the stages of growth, the fish breeder is careful to separate the smaller sized fish from the larger, which would otherwise devour their weaker brethren; Securing the full-sizd fish for sale.—Released February 1.

THE SLAVE'S REVOLT.

Figuring among the chief characters is Rameses, whom we first see approaching a well, by the side of which is a Syrian maid drawing water. Rameses, who is surrounded by his attendant slaves, is thirsty from the heat of the day, and he begs Elissa to give him water from her pitcher. She complies and the great Pharaoh, gazing more intently at her, finds that she is young and beautiful to look upon; forthwith he offers to make her his favorite, and when she recoils from him, he orders his slaves to carry her off, in spite of her own remonstrances and those of Gurzyl, her lover. Gurzyl's gorge rises at being thus contemptuously treated, and he swears that the tyrannous power of Pharaoh shall be broken. The time is ripe for a revolt, for oppression has done its work among the Syrians, and at nightfall, when Gurzyl slips into the den where lie the huddled slaves, he finds that very willing ears are strained to catch the whispered details of his scheme to overthrow the mighty Pharaoh. More than once during the night the cruel taskmaster's whip is curled over Gurzyl, as, his robe pulled over his head, he crouches amongst the supposedly sleeping slaves, and, roused to still greater indignation, he exhausts all his eloquence in spurring on his fellow countrymen to revolt. The following night a feast is given in Pharaoh's palace in honor of Elissa. The girl, however, sits cold and unmoved at the sight of the display, and of the presents heaped up before her. But there does come a moment when a wave of emotion is visible in her face; it is when she suddenly hears Gurzyl's voice, and glancing down, sees him crouching on the floor by the side of her couch. He hurriedly whispers to her that the hour of revolt is at hand, and that soon she will be free. Almost at the same moment Pharaoh rises to his feet, and in a frenzy of intoxication, orders a number of javelins to be brought to him, laughing loudly he hurls these one by one at the standing slaves, whilst Elissa, pale with horror, shrinks back upon her couch. In the midst of this wild scene, Gurzyl gives the signal. The Syrians stealthily creep in, and flames begin to break out, but they are all unheeded by the laughing Pharaoh, who suddenly turning to Elissa, hands her a javelin, and bids her strike down the last slave left standing. Elissa mechanically takes the weapon, and then, with an almost unpremeditated upward throw, she strikes the oppressor dead. Immediately the whole place is in a tumult, but the Syrians are pouring in on all sides. The flames have taken hold of the walls, and the Egyptians are powerless to quell the revolt, which ends in a complete victory to Gurzyl.—722 feet.

RICE INDUSTRY IN JAPAN.

A stretch of pale gold relieved at intervals by the figure of a worker, such is the first vivid impression gained by this film of the rice fields of Japan. Throughout the whole series of views the Japanese methods of separating the grain from the plant, the husk from the kernel of the grain, winnowing, cleansing and sifting are perfectly shown, all the pictures being open air ones. Clear close views of the machines have not been forgotten, and prominent amongst the devices for cleansing the grain is a pair of bellows, which appear to be made of oiled silk or paper.—256 feet. Released February 3.

A COWBOY'S DEVOTEDNESS.

Bud May learns that his sister has been insulted by a cowpuncher and seeks him to make him apologize. Failing to find him, he sends him a note telling him that if he doesn't do this before Bud meets him, he'll put daylight through him. On receiving this the cowboy goes to the girl's home, not to make excuses. He draws his gun threateningly and the girl struggles with him to get it away. In the struggle the gun goes off and the man falls dead at her feet. With Bud's note in the dead man's pocket suspicion naturally falls on him, and rather than have his sister implicated, he assumes the guilt but makes his escape, and in a distant town marries and settles down. After five years he is discovered and tried, and is about to be convicted, when his sister, having heard of the trial, arises from her sick bed and goes to court, where in a dramatic scene she confesses her share in the matter, and Bud is freed just in time to catch his dying sister as she sinks unconscious to the ground.—922 feet. Released February 4.

Solax

MIXED PETS.

Mrs. Ross wants a little pet dog, and wants it badly. Mr. Ross, however, has decided ideas of his own on the subject and will not concent. Uncle Billy, who is visiting the young pair, sympathizing with his niece, determines to get her a pet, and without the husband's knowledge, does so. James, the butler, and Annie, the maid, of the Ross household have been secretly married, and their union blessed with a bouncing baby, which they have left in the custody of a friend as they fear for their position should their marriage and the existence of the infant be discovered. Just as Uncle Billy departs on his mission in quest of a dog, Annie receives a note from her friend telling her the baby is not well and that she must take her away at once. Annie breaks the news to James, and they both decide to bring it to the Ross home. Annie goes for the baby and returns about the same time Uncle Billy arrives with the dog. A string of amusing complications ensue which results in the servants being permitted to keep their baby, and the young wife her dog.—Released February 10.

Vitagraph

DAVY JONES IN THE SOUTH SEAS.

Davy Jones is again on the run, a victim to a weakness for the fairer sex. This time he is a castaway on the shores of Borneo, where he is captured by the natives, whom he wins over with the aid of his magnifying glass, and soon finds himself "King of the Cannibal Island." He enjoys his honors immensely and joins in their sports of tree climbing, war dances and other ceremonies with which he is hailed as chief. He gets up against it, however, when he makes love to a dusky damsel and is told he must marry her. He already has been married once too often and refuses to take chances with another. Again he is on his way a few yards in advance of the pursuing wild men of Borneo. He beats it to the seashore, where he hails a passing vessel, making a very narrow escape amid the flying spears and arrows of his followers.—Released January 28.

JEAN RESCUES.

Jealous of Horace and jealous of Jean, Oscar thinks he loves Alice, with whom he is constantly finding fault for showing the slightest attention to anybody but himself. Jean has a good deal of good dog sense, and instinctively shuns Oscar, whose disposition is anything but lovable. The dog is very fond of Horace, who is a man of gentle nature and kindly character. Jean is always the companion of Alice and naturally comes in for the vent of Oscar's spleen whenever it is aroused against Horace or Alice. Oscar longs to thwart Horace in his attention to Alice. The opportunity occurs when Alice appeals to him to save Horace from drowning. He has been seized with cramps while bathing and unable to reach the shore. Oscar coldly refuses. Jean appears and she goes to the reseue, bringing Horace exhausted to the shore. Alice is disgusted with Oscar and gives him back his engagement ring. A few days later Horace, with Jean, present a very pretty picture as they sit in a happy contented group on the beach.—Released January 31.

SOCIETY AND THE MAN.

Happily and contentedly married, the hero of our story is living in one of the smaller cities surrounded by all the necessary comforts of home. Lured by the greater possibilities of wealth in the Metropolis, he goes thence and soon finds himself in the swirl and swish of society and the stock exchange. His wife is carried into the vortex of bridge-whist and associations with the "smart set." The husband in the pursuit of wealth, his wife in the pursuit of pleasure, their child is neglected and soon there is an inseparable gulf between their common interests of domesticity. Discontent and unhappiness have taken possession of their once happy home. The crash comes; the husband is ruined and contemplates self-destruction. His wife learns of his failure, comes to his support, cheers and comforts him, pleading for the sake of their child to brace up and begin life anew. Clasping his loved ones to his heart, he resolves to start over again and seek contentment rather than riches.—981 feet. Released February 3.

A QUEEN FOR A DAY.

As a cook Bridget McSweeney feels very much discontented. She has a sneaking regard for Heinrich Vondiddlebach, the grocer, who is very much in love with her. Bridget comes into possession of a fortune from an uncle who died in Australia; she decides to live as becomes one of her vast wealth. She buys a home, makes a bid for society, and attracts many elegant gentlemen of pretention and title, who lay siege to her heart in hope of gaining her fortune. Heinrich does not give up his conquest for Bridget's love; to win her he surrounds himself with a following of colored warriors and decks himself out as "The King of Cooney Island." He presents himself to the fair Bridget, who immediately falls to his royal magnificence. They are married and she soon discovers that she has been duped and captured by her old friend Heinrich. What follows her discovery would be a shame to tell when it is so well and laughingly presented in this rich comedy.—1,000 feet. Released February 4.

THE DELUGE.

This is a Biblical drama performed 3317 years B. C., a picture of the destruction of the world by a flood. The Lord, observing the wickedness of the world, decides to destroy it. He instructs Noah to build an ark, or boat, in which he and his three sons, his wife and their wives take refuge. He is also told to take into the ark two of each kind of all living creatures. Noah does as he is told; the rain descends upon the earth, covering it with water, and the people are destroyed, but Noah, his sons and their families are saved. After forty days of inundation the water subsides. Noah sends out a dove from the ark; it returns with an olive branch in its mouth. After a short period the ark rests on Mount Ararat; Noah releases all the inmates from the ark; he and his sons and their wives built an altar unto the Lord, make sacrifice and offer up prayer and thanksgiving for their deliverance. The Lord sets a rainbow in the sky as a promise that he will never destroy the world again with a deluge.—978 feet. Released February 7.

American

A PITTSBURG MILLIONAIRE.

In this drama we tell the story of one Phillip Nash, who advances rapidly from the position of a common laborer to that of general manager of one of the wealthiest and most important of our steel manufacturing interests; the marriage of this young man to his boyhood sweetheart; his wife's contentment with her lot; and then the final disruption of their happy home, due to the changed conditions attendant upon his rapid advance in the commercial world. The depiction of Nash's eventual downfall, after he has shown conclusively his preference for a singer of note, a young woman famous in the light opera world, whose charms and fascinations lead to his complete undoing, is one of the strongest sequence of scenes ever depicted through the medium of motion pictures. His eventual reformation and return to his wife's home is heart-rending in the extreme.—985 feet. Released February 6.

ON THE INSTALLMENT PLAN.

Two chaps from the country arrive in New York in their search for fame and fortune. On their success is dependent a large share in money which they will receive from a wealthy uncle and aunt if they make good. They fit up a small flat on the installment plan and then look for a position. This they find it impossible to obtain and therefore find it impossible to pay the installment collector. The collector calls in his huskies who remove all the furniture from the young fellows' flat, leaving the boys nothing but their bath robes and pajamas. Co-incident with this occurring they receive a telegram from their aunt and uncle that they propose to dine with them that same day. The boys are in an awful predicament as they have been writing their relations that they were getting along fine in the city. They have to keep up an appearance of prosperity. They discover that their neighbor in the next flat has left the city for the day and decide to appropriate his belongings temporarily. This they do and likewise take advantage of his well stocked larder and some extra suits of his clothes. The aunt and uncle arrive and the neighbor returns to find the empty flat. His consternation can better be imagined than described. Investigation leads him to the boys' room. He indignantly takes back his possessions, the uncle and aunt leave in high dudgeon and the boys are left as they started—with an empty flat and a suit of pajamas apiece.—560 feet.

TOO MUCH AUNT.

The spirit of deviltry has been well developed in the boy and his father believes that "to spare the rod is to spoil the child." In the family, however, there is a doting aunt and a loving mother who are inclined to spoil the youth by excess of cuddling. The youngster takes every advantage of their weakness and on one occasion to remain away from the hated school, he has only to pretend to be suddenly affected with a violent "tummy-ache." He is successful as far as his mother and aunt are concerned and he is assured of a day at home, until the father takes a hand. He has every reason to suspect the young man is bluffing and to make sure calls in a doctor, who on arriving, at once pronounces the lad's complaint a simple case of "Hookyites." Then, in spite of the tearful protests of Clarence's champions, the father takes the matter into his own hands and administers the slipper with well applied onslaughts. The young man is completely cured, and starts to school with no great anxiety to sit down, but firmly convinced that the old man knows his business.—430 feet. Released February 9.

Biograph

HEART BEATS OF LONG AGO.

A feud existed between two Italian houses and it meant disaster to anyone of the belligerents to intrude into the opposing house. The lord of the house gives a feast in honor of the arrival of a wealthy foreign noble, whom he expects to make his son-in-law. The daughter, however, has given her heart to the son of her father's enemy. That he may be present at the festival, she surreptitiously takes her father's signet ring, throwing it to him from the window, which, of course, admits him. The father anticipating the intrusion of his enemies, orders death to any member who enters the hall. After the festivities the unwelcome betrothal takes place and the forbidden lover braves death to see his loved one. While they are in clandestine meeting a guard is seen to enter the corridor, so the girl hides her sweetheart in a secret closet, turning the key and taking it with her. Not finding the intruder, the guard imagines he was mistaken. The favored suitor, however, is suspicious and determines to watch. At this moment the father is called away for a time and as an honor to his son-in-law elect leaves the household in his absolute charge. This move works in favor of the nobleman to more effectively pursue his watch, and going into the corridor finds the forbidden lover's cap on the floor outside the closet. This situation if exposed would make the nobleman the laughing stock of the entire courts of Europe, so he vows vengeance. The girl realizes her lover's danger in the air-tight closet and makes a desperate attempt to release him, but in this she is surprised by the noble, who secures from her the key, and despite her order sends the guards off whom she has called to break open the door. The guards, of course, must respect his orders as he has been placed in charge by the master. Later the master of the house returns and the nobleman tells the story to him, and, sure that the imprisoned lover has met his fate by this time, opens the door. His anticipation was correct, for the lifeless form of the forbidden lover falls headlong across the corridor.—997 feet. Released February 6.

PRISCILLA'S ENGAGEMENT KISS.

Germs and microbes are all very well in their way, but they should not be mixed up in love affairs, at least that is what Paul, Priscilla's sweetheart, thinks. Priscilla is ill with throat trouble and Paul is much concerned about this, and his sympathy for her intensifies his love to such an extent that he proposes. Priscilla, of course, is willing, but papa in a joke declares Paul too young to marry. He must grow whiskers and become more manly. At this point the doctor calls to treat Priscilla for her sore throat. This M. D. is a crank on germs and microbes, arguing that bacteria lurks in everything and thorough and frequent disinfection is our only hope to escape disease. Paul is introduced to the doctor, but before taking Paul's hand Doc disinfects it. Maybe Paul isn't sore, but the worst comes when the disciple of germicides in taking Priscilla's pulse lingers. Paul leaves the house insanely jealous of the doctor, for Priscilla, to tease him, seems to be pleased with the doctor's attentions. However, when Paul arrives at the club he has cooled a bit and decides to call again to see Priscilla. He is met by her mother who hands him a note to the effect that the doctor has forbidden her to see Paul or receive his floral tributes if she hopes to recover. It is a case of "Hearts and flowers vs. Germs and microbes." Paul is now furious and determines to do away with himself by smoking himself to death, purchasing all the "weeds" at the club for the purpose. This is rather a slow and disagreeable method so he desists. Furthermore, he reasons that the fickle-hearted Priscilla is not worth it. Priscilla, now cured of her sore throat, is lonesome and longs to see Paul, but her pride prevents her sending for him. Mother, however, sends a note: "There is a little girl who would like to see you." To this Paul sends the answer: "Let the little girl see the germ doctor." It is now Priscilla's turn to get angry and through pique she accepts the proposal of the germist, inviting the engagement kiss. The doctor is about to kiss her, when he catches himself and disinfects her lips. Oh me! Oh my! but she is wild and chases him out. The mother

now sends a second note: "Priscilla cured. The germs and microbes are gone for good." This decides Paul, and calling, everything ends happily. Hearts and flowers are victorious, while germs and microbes receiveth a fall.—997 feet. Released February 9.

Essanay

A WOMAN'S VOICE.

Perry Wells, an artist, falls in love with Grace Allison, a young society debutante, the romance originating with the painting of a portrait of the young lady. Perry's portrait also wins the approval of Miss Allison's mother and the match is agreed to. Perry is thoroughly devoted to his prospective bride, but at certain periods of the time he is so pressed with work that it appears to the thoughtless girl that he is neglecting her. In order to save all the time possible Perry moves into his studio and works late at night, often not arriving in the mornings until a late hour. Perry employs a negro janitress to keep his studio tidy, the woman calling, as a rule, early in the morning before the artist arises. One morning while the negress is busy dusting and sweeping and Perry is still in dreamland, Miss Allison calls him up on the telephone. Imagine her dismay when a woman's voice informs her that "this is Mr. Wells' studio"—and at that hour of the morning! Furthermore the voice says that "Mr. Wells is not up yet.' Miss Allison hangs up the receiver with a bang, thoroughly enraged, for she is confident that Perry is a contemptible deceiver. In a moment she snatches off the ring, calls a messenger boy and dispatches the ring and a curt note to the luckless artist. It is some time before Perry can

fathom it out, until the negro maid confesses, when he makes her accompany him to his fiancee's house, where, happily, explanations are made and the ring is returned to Miss Allison.—566 feet.

TEN WORDS FOR TWENTY-FIVE CENTS.

Bixby, a traveling salesman, is out on the road when he receives a telegram from his wife, stating that she is dying. The information is both startling and puzzling inasmuch as when he left home a few days before his wife had appeared in the best of health. Bixby makes a dash for home and after encountering all sorts of obstacles to his progress arrives at his domicile, his attire a wreck. Furthermore he finds his wife just as hale and hearty as when he left her with not the least appearance of any mortal ailment. The accident is explained when Mrs. Bixby tells him that the original telegram had read: "My dear Frank. Come home at once. I am dying to see you." The telegraph operator, with the wisdom of Solomon, had cut off the last three words in order to get the message into the ten word limit.—425 feet. Released February 7.

THE BAD MAN'S DOWNFALL.

When pretty Molly Martin comes out to the West to teach school, she is beset by many admirers. But the most persistent, and as Fate often wills it, the least acceptable, is one "Bad" McGrew, town bully and a generally

worthless scamp. His attentions are offensive to the refined girl, but so thoroughly cowed are the other town gallants, that McGrew has his own way and Molly finds herself in most precarious circumstances. McGrew cautions all the young men of the town that he will shoot any of them who try to make love to his girl, the young cowards faithfully carrying out his instructions. McGrew, after further warning the boys to keep aloof, leaves town for a trip up into the mountains and during his absence, Harry Perkins, a young U. S. deputy marshal, comes to town and is immediately smitten by the pretty school teacher. Despite the warning of the others, Perkins becomes the devotee of pretty Molly. The crisis comes with the return of McGrew, who, of course, is informed of Perkins' jumping the love claim. McGrew sends a note to Perkins informing the deputy of his his desire to see him. Perkins makes his call and at the end of a most dramatic scene snaps the handcuffs on his rival's wrists, producing credentials showing that McGrew is wanted by the government authorities for smuggling. Perkins not only wins the girl, but a substantial reward for the capture of McGrew.—1,000 feet. Released February 11.

Edison

THE DOCTOR.

In the latter part of this silent drama is shown to the smallest detail the exact reproduction of a famous painting, "The Doctor," by Mr. Luke Fildes, R. A., of England, which is now hung in Tate's Gallery; London, and which won its painter universal fame. Around this painting has been woven a sweet love story which opens in the firelight glow when the famous specialist, Doctor Gray, bends lovingly over the hand of his lady love and wins her consent to their union. Suddenly the spectator is confronted with a sharp contrast to this tender scene of love and happiness, in a view of one in which sorrow and anguish prevail. We are shown a simple, humble home with father and mother watching the life tide ebb away from their darling child, lying upon a poor, improvised cot before them. In desperation the father goes forth to seek Doctor Gray, the famous specialist, and begs him to come and save this little life. This, by chance, transpires upon the night on which Doctor Gray's wedding is to be announced, and he is all dressed to leave when the heartbroken father makes his appeal for aid. It isn't money or fame that wins the doctor over to his duty, but pure, human sympathy; and he goes to the humble home to fight with death, while his sweetheart is watching and waiting for him to come to the gay reception at her home. At last news comes to her that he will be unable to attend. Her pride is struck to the quick and, wounded in her heart, she determines to go herself and see why she is thus forgotten in the hour of her greatest happiness. She goes and sees why she has been forgotten, and her heart goes out to the great, noble man who has won the fight and who has saved the little child's life.—1,000 feet. Released February 7.

TWO VALENTINES.

Here we have a typical New York uptown boarding house with the usual mixture of nationalities and dispositions. The central figures of this particular boarding house, and the principal characters in the story, are two Americans, a young man and a young girl, who are deeply in love but unfortunately so very bashful that they are almost too timid to speak to each other. As St. Valentine's day approaches they both see a way to declare their sentiments by sending each other a beautiful valentine, but in doing this they are unfortunate, inasmuch as they select two valentines which are identical in appearance and read exactly alike as follows:

"My Valentine, I love you,
Your Sweetheart I would be;
But send back this tender token,
If you will not marry me."

Upon receiving the valentine each is under the impression that the valentine has been returned and the tender overture of affection rejected. This is more than they can bear and they sadly leave the boarding house, which has no more charm for either of them. By some strange coincidence they find themselves side by side in a street car. Coming face to face suddenly, a jolt of the car causes both valentines to drop and an explanation follows, with the result that they come to an understanding and joyfully return to the boarding house, where they are greeted vociferously and discreetly left alone. The two heads, very close together, are finally obscured by a vision of the two valentines coming from the side and joining as one.—1,000 feet. Released February 8.

HIS FIRST COMMISSION.

This carries us back to the time when Abraham Lincoln was President and shows us a little, homely incident which indicates a side of his character not so well known or so much noted among the sterner beauties and deeds of his presidency. In the first scene he awards a young private for exceptional deeds of valor, by giving him a commission as Lieutenant. This scene is watched by his little son Tad, who, after a ceremony, demands that a commission be bestowed upon him. In jest Lincoln writes out an informal commission, making the boy a Lieutenant of the United States Army, and it is duly signed by the Secretary of War and given to the boy. The latter has a small uniform made and proceeds to recruit an army from the servants of the white house. The colored cook, the footman and the maid are all enrolled, after which he proceeds to relieve the sentries on duty about the White House grounds with his newly acquired forces. When they object he shows them his commission, and as it is signed by the President they have nothing to do but obey. There is one private whose wife is ill and who would like to go and see her, but whose commanding officer tells him that he must report for duty and stay by the post. This soldier is one whom Tad personally relieves, his army having deserted him after being left on other posts. The private demurs at the command to leave his post, but being shown the commission, he finally accepts the situation and goes to visit his little wife. Of course his absence is noted and he is arrested, and it would go hard with him but that he tells the story of the President's son and of his being commanded to leave. On his plea he is brought before the President, where the officer of the day, having noticed the post vacant and the boy guarding it, substantiates the private's story. Then the President understands the situation, and after a thoughtful moment leaves the rest of the company and, taking the sentry with him, repairs to the grounds. There, wandering wearily up and down, half asleep, is poor little Tad carrying the heavy musket, from the weight of which his arms are sore and aching. When he sees the President he salutes in a very sleepy manner, and then falls asleep standing up against the tall figure of his father. The President bends gently and takes up the little figure in his arms, and then, motioning the sentry back to his post with a few words of caution for the future, he takes the sleeping boy back to the White House.—990 feet. Released February 10.

Among the Picture Theaters

THE ROLL OF STATES.

ALABAMA.

The new Franklin, one of the handsomest and most complete moving picture houses in the South, has just been thrown open to the public in Birmingham, being located on Avenue E. The house will be under the management of John M. Martin, who will devote his entire time and energy to the new enterprise and will present only the best and newest pictures. No expense has been spared in providing for the comfort of its patrons and all arrangements are modern and thoroughly up to date.

A new motion picture house, to be known as the "Player," has been opened at Alabama City with a capacity of 200, under the management of Harry Crawford and S. Hunt.

Two new moving picture and vaudeville houses are being erected in Eufaula.

ARKANSAS.

The Los Angeles Theater Company, of Los Angeles, which owns a chain of moving picture theaters extending from that city to El Paso, Texas, is making arrangements to open a moving picture house in Bisbee.

CALIFORNIA.

The Garrick theater, San Francisco, which represents an initial investment of $250,000, has been taken over by the Garrick Theater Company, incorporated for that purpose, who will operate it as a moving picture house. Among those interested in the new enterprise are Sam Harris, or the Wigwam theater, and Irving Ackerman, of the Chutes.

Plans have been prepared by Architect Frank L. Snuff, of Los Angeles, for a moving picture theater to be erected at Fullerton by Mrs. Browning.

COLORADO.

W. E. Lent, a well-known moving picture man of Pueblo, is erecting a new moving picture theater in that city which will be second to none in the state. It will have the latest equipment and special attention will be given to its seating facilities. The seats will be regular theater chairs and the floor of the new house will be inclined so that all may have an unobstructed view. The house is just about completed.

The Isis Amusement Company of Denver has purchased a site at 1716-1726 Curtis street for $85,000 on which will be erected a new theater to cost approximately $100,000. The company has been using the old Curtis theater for some time and will continue to do so until the new house is ready for occupancy. The new theater which will be known as the Isis, will be devoted to moving pictures and vaudeville. The house will be thoroughly modern and up-to-date in every particular. S. L. Baxter is general manager of the Isis company.

FLORIDA.

A deal has been consummated between Messrs. Snead and Morris, of the New Daytona theater, of Daytona, and Manager Titus, of the Crystal theater, of that city, whereby the inerests of the two places have been consolidated to a certain degree. Hereafter the Daytona will have no moving pictures, having sold is equipment to Mr. Tius, while he Crysal will have no attractions aside from its high grade moving pictures.

The Pastime theater of Jacksonville has been undergoing extensive improvements.

ILLINOIS.

The Grand Opera house, of Canton, Jack Gosnell manager, has been turned over to moving pictures, the only exception being that a few other atractions may appear from time to time.

Articles of incorporation have been filed at Springfield by the Motographic Supply Company, of Chicago, with a capital stock of $25,000, for the purpose of dealing in cameras and moving picture machines. The incorporators are Louis A. Boening, Victor W. Thomas and Samuel Block.

Messrs. Del Robinson and M. Sehn, of Peoria, contemplate installing a moving picture and vaudeville house at Sterling.

R. T. La Grill, of Muscatine, Ia., has also been looking the field over with a view to locating a moving picture theater in Sterling.

A. W. Ackerman, manager of the Lyric theater, of Havana, has leased the Probst Opera house in Greenview and will operate both as moving picture houses.

The Grand Opera house, of Freeport, will be given up to moving pictures on nights when it is not occupied by other attractions.

The moving picture theater operated at Centralia by J. H. G. Brinkerhoff has been purchased by C. Morrow.

Messrs. Henry Clopine and Arthur Angelmier are making arrangements to open a new theater at Dixon.

The Superba moving picture theater of Freeport recently installed a new double dissolving stereopticon machine, the only one of its kind in the city.

Henry Woodhill, operator in Curtis Theater, Savanna, has invented a new machine for use in moving picture theaters which bids fair to be of great service to the moving picture operator.

The Grand opera house of Freeport will be devoted to moving pictures at such times as it is not occupied by other attractions.

The Pattee opera house at Monmouth has inaugurated its system of presenting moving pictures when the house is not otherwise occupied. The program will be given each evening of the week with an entire change of program.

IOWA.

The Princess Theater Company, of Oskaloosa, will open a moving picture theater in the Neagle building. Chris Malone is one of the chief promoters of the enterprise.

The Colonial moving picture theater of Des Moines has recently installed a new ground glass screen at a cost of $1,000, said to be the only one of its kind in the west, which is a vast improvement over the ordinary screen.

The Pastime, a handsome new moving picture theater, has been opened at 14 South Dubuque street, Iowa City, by Fred Dever, who promises to give his patrons the best that can be obtained.

J. A. Lisy, owner of the Family theater, of Davenport, has opened a moving picture theater at Monmouth, Ill., under the management of Mr. and Mrs. Guy Gray.

The new Palm theater, one of the finest moving picture theaters in the state, was recently opened to the public by Charles Berkell at 428 Brady street, Davenport, under the management of Johnny Philliber.

The Pastime is the name of a handsome new moving picture theater recently opened in Iowa City by Fred Dever. The house is thoroughly modern and up-to-date in every particular and Mr. Dever intends to give his patrons the best that can be obtained.

KENTUCKY.

The Columbia is the name of a new moving picture house to be opened at Bowling Green by the Columbia Theater Company, under the supervision of C. A. Chivers, secretary and treasurer and A. C. Phillips, general manager, whose experience in the amusement line guarantees the success of the new enterprise. It will be located in the new Rabold building. The company operates 14 theaters located in various sections of the country. The new house will be high class and will cater to the best element.

MARYLAND.

The Empire Theater Company, represented by Geo. W. Rife, 1 N. Calvert street, Baltimore, has had plans prepared for a theater to be erected at 311-317 West Fayette street that city at a cost of $100,000.

MASSACHUSETTS.

The Colonial, a moving picture and vaudeville house of Lowell, has been purchased by the New Hampshire Amusement Company.

MICHIGAN.

The Bijou theater, of Adrian, has been thoroughly renovated and remodeled and will be operated under the name of the Princess by H. D. Frost. The house has a capacity of 500, is well ventilated, heated by steam, and not only assures the comfort of its patrons, but promises to give them high grade entertainment as well.

C. S. Sullivan, who owns moving picture theaters in Ishpeming, Calumet and Hancock, contemplates opening another house at the corner of Sheldon and Dakotah streets, Houghton.

MINNESOTA.

The Commercial Club of Minneapolis has invited the moving picture exhibitors of the country to hold their next convention in that city. The meeting will be held some time during the summer.

The Unique moving picture theater at Brainerd, after being thoroughly remodeled and many new features installed, will be operated by Messrs. Laymon and Smith under the name of the Princess.

Messrs. Snow and Busse, managers of the Le Sueur opera house, announce their house will be devoted to moving pictures on nights when not occupied by other attractions.

Claude Hanson, formerly operator at the Grand theater, Lake City, has purchased a half interest in a moving picture and vaudeville house at Warren.

MISSOURI

Charles Fern will open a moving picture theater in the opera house at Clarksville.

A handsome and elaborate moving picture house is being erected at 15-17 South Sixth street, St. Louis, by Frank Talhot, who already operates a number of theaters in that city, which will have a seating capacity of 1,600. The front will be of white Italian marble and will be illuminated with hundreds of electric lights. A port cochere, the construction of which will be white glass and copper, will be suspended from the second floor in front.

A late addition to Springfield's places of amusement is a moving picture theater erected at 408 East Commercial street by the Merchants' Amusement Company.

The Otecy Amusement Company of St .Louis will erect a ten-cent theater on Grand avenue, between Hartford and Juniata streets, which will be devoted to moving pictures.

NEBRASKA.

J. H. Free, of Duluth, contemplates the erection of a theater at Two Harbors, which will cost about $25,000. Mr. Free is the proprietor of the Happy Hour Theater, an enterprising moving picture house of Duluth.

Messrs. C. L. Peck of Neola and H. N. Hildebrand, of Harlan, Neb., have completed arrangements to install a moving picture theater at Plattsmouth. It will be located in the Wettencamp block and the promoters promise their patrons high grade entertainment.

NEW JERSEY.

Plans have been prepared for a moving picture theater for Trenton which will have a seating capacity of 1,000.

Messrs. Joseph M. Daly and William A. Oaly have had plans prepared for a new theater which they propose to erect at 298 Main street, Patterson, to be devoted to moving pictures. The house will be fireproof throughout, even the floor will be concrete. The estimated cost is placed at $16,000.

NEW YORK.

The Thurstone Moving Picture Machine Company has been incorporated at Jamestown with a capital stock of $50,000 for the purpose of manufacturing moving picture apparatus and supplies. The incorporators are Chas. A. Johnson, L. L. Thurstone and Andrew Venman, all of Jamestown.

The Victoria, Rochester's new and up-to-date vaudeville house, which has a capacity of 1,150, has just been opened under the management of Maurice H. Kuhn. The new house will also include moving pictures in its program.

Permission has been granted Louis Becker to erect a moving picture theater at 909 Jefferson street, Buffalo, at a cost of $4,500.

The Theatorium is the name of a new moving picture theater opened at Waverly by Lewis Bowers.

The Arcade, a moving picture house of Niagara Falls, formerly owned by Benjamin Goodman, has passed into new hands.

The Victoria, a handsome new moving picture and vaudeville house was recently opened in Rochester. Its seating capacity is 1,600 and the house has been arranged with a view to the comfort and safety of its patrons.

Messrs. William T. Shyne and others will open a moving picture theater in Troy for which purpose they have secured a site on Third street, between Congress and Ferry.

NORTH CAROLINA.

The Star, a moving picture and vaudeville house, has been opened at Hillsboro, under the management of Thomas Quamme and Mrs. E. S. Bryant.

H. T. Greenleaf, Jr., contemplates erecting a new moving picture theater at Elizabeth City.

NORTH DAKOTA.

The Orpheum Theater, operated by Messrs. Bauer and Rehfield, has been thoroughly overhauled and a new machine has been installed.

OHIO.

William Gordon, who operates the airdome at Middleton, will erect a new theater in that city at a cost of $50,000.

The Wonderland, a moving picture theater of Batavia, is now under new management, having been leased by G. Tallman, who proposes to make his house first-class in every respect.

A new moving picture theater was recently opened at Richard and McClure streets, Dayton, by Harry A. Limbert.

The Lyric, a new vaudeville and moving picture theater, will be opened on North Main street, between High and North streets, Lima, by Messrs. Berger and Doyle.

The Bijou theater at Youngstown, formerly operated by Messrs. Fitch and Hanitch, was recently purchased by Robbins Brothers.

The Lyric theater of Tiffin has been purchased by W. L. Lonsway.

OKLAHOMA.

A new moving picture theater has been erected at Heavener by Messrs. W. S. Hoag, of Fort Smith.

OREGON.

The Aloha theater at Eugene, which has heretofore been conducted as a moving picture house, has been remodeled and a large stage added and hereafter vaudeville will be added to its program.

A new moving picture theater is being erected at Kenton by C. W. Stafford.

The Cosy Amusement Company has been incorporated at Portland for the purpose of operating moving picture theaters. The capital stock is $2,500 and the incorporators are E. L. Cooper, Katie Cooper and B. E. Selerman.

PENNSYLVANIA.

The Lyceum theater at Montgomery has been opened with moving pictures, under new management.

The well-known moving picture man, J. C. Keith, has leased the property at Eleventh avenue and Fourteenth street, Altoona, which will be converted into a moving picture and vaudeville house.

The property at 747 South Third street, Philadelphia, has been purchased at a cost of $45,000 by B. F. Miller, who will spend an additional $16,000 in converting it into a first-class moving picture theater.

The Arcade moving picture theater, of Pottstown, formerly owned by Charles Wiley, has been purchased by Charles Bennethum of Reading. The house will be under the management of Thomas R. Cook, who will also have charge of the Victor another one of Mr. Bennethum's houses in Pittstown.

We are informed by Mr. William K. Goldberg, of Reading that we were in error in stating in The Nickelodeon of January 28, that he had purchased the Palace theater, an enterprising moving picture and vaudeville house of that city. He can only claim the honor of being its manager.

The Hippodrome is the name of a new moving picture theater recently opened to the public at 12 South Main street, Pittston.

The Lyric Theater of Schuylkill Haven has been reopened under new management.

SOUTH DAKOTA.

The Iris Theater of Lead, formerly operated by Messrs. Protero and Rainey, has been purchased by O. F. Trisler.

TEXAS.

The Cozy Theater, a moving picture and vaudeville house of Breham, recently moved into its new quarters.

UTAH.

The Orpheum, one of Salt Lake City's cosiest and most artistic moving picture theaters, was recently opened at 241 Main street, that city, by the Northwest Amusement Company under the management of John T. Lane. The house has a seating capacity of 650 and is equipped with comfortable opera chairs. The lighting scheme is more elaborate than that of any amusement house in the city and includes many special electrical effects. The company is incorpated with a capital stock of $10,000 and the officers are as follows: President, J. W. Bourt; vice-president and general manager, John T. Lane; secretary, G. D. Lloyd; treasurer, W. G. Weaver.

WASHINGTON.

A new moving picture theater has been opened at Wenatchee by W. T. Rarey.

Record of Current Films

Believing the classification of film pictures by the nature of their subjects to be of greater importance to the exhibitor than classification by maker, THE NICKELODEON has adopted this style in listing current films. Exhibitors are urged to make use of this convenient tabulation in making up their programs. Films will be listed as long in advance of their release dates as possible. Film manufacturers are requested to send us their bulletins as early as possible. Reasonable care is used, and the publishers cannot be responsible for errors.

LICENSED

DRAMA

Date.	Title.	Maker.	Length.
1-9	Shadows of the Past	Selig	1,000
1-9	The Italian Barber	Biograph	998
1-9	Tag Day at Silver Gulch	Lubin	935
1-9	The Evils of Betting	Pathé	676
1-10	The Test of Friendship	Edison	1,000
1-10	A Child's Plea	Gaumont	758
1-10	The Sophomore's Romance	Essanay	1,000
1-11	Washed Ashore	Eclipse	670
1-11	For the Love of an Enemy	Kalem	995
1-12	The Owner of the "L. L." Ranch	Melies	980
1-13	Water Lillies	Vitagraph	991
1-13	The Link That Held	Edison	966
1-13	The Heart of an Indian Mother	Kalem	1,000
1-14	The Girl of the West	Essanay	960
1-14	Coward or Hero	Vitagraph	975
1-14	A Simple Rustic Tale	Gaumont	958
1-14	The Battle at Redwood	Pathé	1,000
1-16	Buddy	Selig	1,000
1-16	His Trust	Biograph	996
1-16	Saved by Her Prayers	Pathé	331
1-17	The Sealed Letter	Gaumont	837
1-17	With Interest to Date	Edison	1,000
1-17	His Master's Son	Essanay	1,000
1-17	Three Men and a Maid	Vitagraph	1,000
1-18	Her Chum's Brother	Kalem	980
1-18	Trailed by an Indian	Pathé	495
1-18	By the King's Order	Eclipse	991
1-19	His Trust Fulfilled	Biograph	999
1-19	A Brother's Redemption	Lubin	1,000
1-19	An Englishman's Honor	Selig	1,000
1-20	Mike the Miser	Edison	990
1-20	Robbie and the Redskins	Kalem	850
1-21	The Border Ranger	Essanay	985
1-21	The Kleptomaniac's Repentance	Gaumont	965
1-21	The Marked Dollar	Pathé	968
1-21	Cast up by the Deep	Vitagraph	1,001
1-23	Fate's Turning	Biograph	998
1-24	An Eventful Evening	Edison	
1-24	A Sin Unpardonable	Essanay	1,000
1-24	The Twilight of a Soldier's Life	Gaumont	945
1-25	Saved by Telegraphy	Pathé	720
1-25	The Sailor's Return	Eclipse	689
1-25	The Secret of the Still	Kalem	950
1-26	How Mary Met the Cowpunchers	Melies	980
1-26	Father Love	Lubin	1,000
1-26	The Spy	Selig	
1-27	Girl of the Mountains	Vitagraph	
1-27	The Black Bordered Letter	Edison	1,000
1-27	Puritans and Indians	Kalem	970
1-27	Il Trovatore	Pathé	970
1-28	The Two Reformations	Essanay	
1-28	The Baby Fortune Hunters	Gaumont	682
1-30	The Little Circus Rider	Selig	
1-30	The Escape from the Tuileries	Pathé	1,000
1-30	A Wreath of Orange Blossoms	Biograph	993
1-31	Jean Rescues	Vitagraph	970
1-31	The Last Curtain	Gaumont	823
2-1	The Sheriff's Sister	Kalem	1,000
2-1	Disinherited	Eclipse	990
2-2	Age vs. Youth	Lubin	1,000
2-2	Curse of the Red Man	Selig	1,000
2-2	Only a Sister	Malies	980
2-2	Three Sisters	Biograph	997
2-3	Selling Old Master	Edison	990
2-3	The Trail of the Pomos Charm	Kalem	1,005
2-3	The Slave's Revolt	Pathé	722
2-3	Society and the Man	Vitagraph	880
2-4	A Cowboy's Devotion	Pathé	1,000
2-4	Carmenita, the Faithful	Essanay	995
2-6	Heart Beats of Long Ago	Biograph	997
2-7	The Doctor	Edison	1,000
2-7	The Deluge	Vitagraph	
2-8	Little Sister	Kalem	970
2-8	Legally Dead	Pathé	1,000
2-9	Tony the Greaser	Melies	980
2-9	Thelma	Selig	1,000
2-10	The Missing Bride	Pathé	800
2-10	His First Commission	Edison	990
2-10	The Broken Trail	Kalem	1,000
2-10	The League of Mercy	Vitagraph	
2-11	Silver Leaf's Heart	Pathé	1,000
2-11	At the White Man's Door	Vitagraph	
2-11	The Bad Man's Downfall	Essanay	1,000

COMEDY

Date.	Title.	Maker.	Length.
1-10	Doctor Cupid	Vitagraph	987
1-11	The Twin Cinderellas	Pathé	
1-11	The Gardener's Ladder	Edison	700
1-11	The Twin Cinderellas	Pathé	705
1-11	Dusty Rhodes Takes a Flight	Pathé	249
1-12	The Rival Dramatists	Selig	1,000
1-12	The Midnight Marauder	Biograph	392
1-12	Help Wanted	Biograph	605
1-12	The Widow's Choice	Lubin	950
1-13	Max Is Almost Married	Pathé	572
1-13	So Near but Not Quite	Pathé	410
1-16	Will It Ever Come to This?	Lubin	715
1-16	Easy Coin	Lubin	250
1-16	Marguerite's Birthday	Pathé	659
1-18	Uncle's Birthday Gift	Edison	995
1-19	Changing Cooks	Melies	980
1-20	The Tables Are Turned	Pathé	981
1-20	The Girl in the Film	Vitagraph	963
1-23	Father Makes Himself Useful	Lubin	975
1-23	How Max Went Around the World	Pathé	633
1-23	A Robust Patient	Selig	1,000
1-23	Gasoline for a Tonic	Pathé	361
1-24	It Did Look Suspicious	Vitagraph	
1-25	The Lover and the Count	Edison	995
1-25	Whiffles' New Sleeve	Pathé	282
1-26	The Poor Sick Men	Biograph	991
1-28	Davy Jones in the South Seas	Vitagraph	
1-28	Father Against His Will	Pathé	720
1-28	Betty Rolls Along	Pathé	289
1-30	His Bogus Uncle	Lubin	1,000
1-31	The Jilted Joker	Essanay	640
1-31	Hank and Lank—They Make a Mash	Essanay	366
2-1	Bumptious as Romeo	Edison	975
2-1	Hearts, Hunger, Happiness	Pathé	690
2-4	A Queen for a Day	Vitagraph	995
2-4	Jiggers Looks for a Job	Gaumont	537
2-6	A Double Elopement	Lubin	990
2-6	Max Has the Boxing Fever	Pathé	561
2-6	Too Much Mother-in-Law	Selig	1,000
2-7	A Woman's Voice	Essanay	
2-7	Ten Words for Twenty-Five Cents	Essanay	
2-8	Two Valentines	Edison	1,000
2-9	Priscilla's Engagement Kiss	Biograph	997

SCENIC

Date.	Title.	Maker.	Length.
1-9	In the Land of Monkeys and Snakes	Pathé	276
1-10	The Hills of Corsica	Gaumont	243
1-11	The Home of the Seal	Edison	300
1-17	A Water Contest	Gaumont	168
1-18	Sea Birds in Their Haunts	Pathé	462
1-20	U. S. Light Artillery in Action	Kalem	95
1-24	Firemen's Parade	Vitagraph	
1-25	Scenes in Jersey Island	Eclipse	296
1-28	Gorges of the Bourne	Gaumont	293
1-31	At Eventide	Gaumont	173
2-4	Krimmel Waterfalls	Gaumont	435

INDUSTRIAL

Date.	Title.	Maker.	Length.
1-11	Wood Carving at Brienz	Eclipse	320
2-1	Practical Brook Trout Breeding	Pathé	279
2-8	The Rice Industry in Japan	Pathé	256

DAILY LICENSED RELEASES.

MONDAY: Biograph, Lubin, Pathe, Selig.

TUESDAY: Edison, Essanay, Gaumont—Kleine, Vitagraph.

WEDNESDAY: Edison, Kalem, Eclipse—Kleine, Pathé.

THURSDAY: Biograph, Lubin, Melies, Selig.

FRIDAY: Edison, Kalem, Pathe, Vitagraph.

SATURDAY: Essanay, Gaumont—Kleine, Pathe, Vitagraph

INDEPENDENT

Date.	Title.	Maker.	Length.
	DRAMA.		
1-9	An Arizona Romance	American	990
1-9	Their First Misunderstanding	Imp	998
1-9	An Erring Son's Awakening	Yankee	
1-10	The District Attorney	Powers	
1-10	An Indian Trapper's Prize	Bison	900
1-11	Sleepy Hollow	Nestor	
1-11	The Hour of Fate	Reliance	900
1-11	The Goose Creek Claim	Revier	
1-11	Sleepy Hollow	Nestor	
1-11	Bill's Widow	Champion	950
1-11	A Letter to the Stork	Atlas	
1-12	The Empty Shell	Imp	995
1-12	Joanna of Braganza	Itala	900
1-13	The Girl and the Burglar	Solax	
1-13	The Creek Claim	Bison	900
1-13	The Vote That Counts	Thanhouser	1,000
1-14	On Kentucky Soil	Reliance	900
1-14	The Recall	Itala	900
1-14	Monte Cristo	Powers	
1-14	A Homeless Boy	Great Northern	
1-16	Melody	Imp	995
1-16	The Folks Back Home	Yankee	
1-17	Texas Ted's Defense	Bison	900
1-18	A City Wolf	Atlas	
1-18	The Will of a Western Maid	Champion	
1-18	Their New Minister	Nestor	
1-18	For the Child's Sake	Revier	500
1-18	The Blue Domino Disguise	Ambrosio	500
1-19	The Bonanza King	American	
1-19	A Sad Fascination	Itala	900
1-20	Returned to the Fold	Yankee	
1-20	A Reporter's Romance	Solax	
1-20	The Redskin's Secret	Bison	900
1-20	A Dreadful Dilemma	Lux	586
1-20	The Old Curiosity Shop	Thanhouser	1,000
1-21	A Noble Heart	Powers	
1-21	The Vows	Reliance	900
1-21	The Trunk Mystery	Great Northern	
1-23	The Dream	Imp	1,000
1-23	The Convict's Last Chance	Yankee	
1-24	When Love Was Blind	Thanhouser	1,000
1-24	A Wife's Love	Powers	
1-24	The Red Man's Wrath	Bison	900
1-25	A Wife's Calvary	Ambrosio	500
1-25	For Remembrance	Reliancce	900
1-25	The Man in 23	Nestor	
1-25	Irish Hearts	Atlas	
1-25	Why He Went West	Champion	950
1-26	Bertie's Bandit	American	1.000
1-26	Phone 1707 Chester	Imp	997
1-26	The Revenging Picture	Itala	900
1-27	An Infamous Son	Lux	652
1-27	Trials of Bud Brown	Bison	900
1-27	Stealing a Ride	Thanhouser	
1-27	A Son of Old Glory	Yankee	
1-27	His Best Friend	Solax	
1-28	The Masqueraders	Powers	
1-28	The Last Laugh	Reliance	900
1-30	The Genius	American	965
1-30	The Taxicab Mystery	Yankee	
1-31	For My Pal	Powers	
1-31	Only in the Way	Thanhouser	
2-1	A Brass Button	Reliance	900
2-1	His Great Sacrifice	Atlas	
2-1	Judged by Higher Power	Champion	950
2-1	The Bridal Trail	Nestor	
2-2	The Mission in the Desert	American	985
2-2	Coachman of the Village	Itala	900
2-3	The Counting House Mystery	Yankee	
2-3	Adrift	Thanhouser	
2-3	A Squaw's Bravery	Bison	900
2-3	Back to the Old Homestead	Lux	944
2-4	The Command from Galilee	Reliance	900
2-4	The Cattle King of Arizona	Powers	
2-4	The Criminal Chief's Capture	Great Northern	
2-6	A Pittsburg Millionaire	American	985
2-6	Doctor Against His Will	Eclair	984
2-6	At the Duke's Command	Imp	1,000
2-6	Foiling the Camorra	Yankee	
2-8	Kelly, U. S. A.	Atlas	
2-8	The Transgressor	Nestor	
2-8	The Schoolma'am's Courage	Reliance	900
2-10	Was She Justified?	Yankee	
2-10	The Norwood Necklace	Thanhouser	
	COMEDY		
1-10	A Tip to Husbands	Powers	
1-10	Everybody Saves Father	Thanhouser	450
1-10	The Only Girl in Camp	Thanhouser	480
1-11	How Tweedledum Pays Bills	Ambrosio	500
1-12	Lucy's Lover	American	500
1-12	The Borrowed Flat	American	420
1-13	Bill as a Jockey	Lux	465
1-13	That Is My Name	Lux	438
1-16	The Battered Bride Grooms	American	525
1-16	A Dental Disaster	American	450
1-16	My Wife's Hat	Eclair	482
1-16	Jealousy of Sosthenes Ramulot	Eclair	478
1-17	A Montana Love Story	Powers	
1-17	Lover's Trials	Powers	
1-17	Bertie's Brainstorm	Thanhouser	1,000
1-18	You Try It	Revier	500
1-18	The Country Girl	Reliance	900
1-18	A Tailor's Queer Advertisement	Ambrosio	500
1-19	His First Patient	Imp	500
1-19	The Rev. Goodleigh's Courtship	Imp	500
1-20	His Faithful Furniture	Lux	360
1-21	The Visit of a Friend	Itala	500
1-21	A New Kind of an Arm Chair	Itala	500
1-23	When a Man's Single	American	1,000
1-23	Painless Extraction	Eclair	508
1-23	Kill the Fly	Eclair	442
1-24	Little Dorothy	Powers	
1-25	Tweedledum Within a Cask	Ambrosio	500
1-27	Prompt Payment	Thanhouser	
1-27	Little Willie Goes Cycling	Lux	236
1-28	Triumph of Intelligence	Great Northern	
1-28	Mr. Muggins Has His Sewing Done	Great Northern	
1-28	My Son Is Guilty	Itala	900
1-30	Maid or Man	Imp	995
1-30	The Emperor's Lunch	Eclair	603
1-30	The Elusive Robber	Eclair	373
1-31	A Tough Tenderfoot	Bison	900
2-1	The Return from Seaside Bathing	Ambrosio	500
2-1	Tweedledum Tries Winter Sports	Ambrosio	500
2-2	An Imaginary Elopement	Imp	500
2-2	The Mix-Up	Imp	500
2-3	Ring of Love	Solax	
2-4	The Feast of Foolshead	Itala	900
2-7	The Westerner and the Earl	Thanhouser	
2-8	At Double Trouble Ranch	Champion	
2-9	On the Installment Plan	American	560
2-9	Too Much Aunt	American	430
2-9	The Mirror	Imp.	500
2-9	When the Cat's Away	Imp.	500
2-10	Mixed Pets	Solax	
	SCENIC.		
1-11	Clouds and Ice Fields	Ambrosio	500

DAILY INDEPENDENT RELEASES

MONDAY: American, Eclair, Imp, Yankee.

TUESDAY: Bison, Powers, Thanhouser.

WEDNESDAY: Ambrosio, Atlas, Champion, Nestor, Reliance.

THURSDAY: American, Imp, Itala.

FRIDAY: Bison, Lux, Solax, Thanhouser, Yankee.

SATURDAY: Columbia, Gt. Northern, Itala, Powers, Reliance.

THE NICKELODEON

$2.00 Per Year | Published Weekly by ELECTRICITY MAGAZINE CORPORATION, Monadnock Building, Chicago | 10 Cents Per Copy

Vol. V | CHICAGO, FEBRUARY 11, 1911 | No. 6

PROGRESS with "The Nickelodeon's Record of Films" has developed to the point where future announcement can be made. The work has resolved itself into a semi-annual Exhibitors' Hand Book and Film Record. It will have a free distribution, reaching all picture theaters.

¶ The first edition will appear shortly, purely as a Film Record, listing all films issued between July 1 and December 31, 1910, inclusive. The Record lists "Licensed" and "Independent" films under the makers' name and address; classifies the films chronologically, as released, giving name and length, under the sub-headings: Acrobatic, Comedy, Drama, Industrial, Nature Study, Scenic, Scientific, Sports, Topical and Trick.

¶ We want all exhibitors to have a copy. For fear we do not have your address, make your request now. The book will be sent to you promptly and without cost.

ELECTRICITY MAGAZINE CORPORATION, MONADNOCK BLDG., CHICAGO

The Nickelodeon

Published Every Saturday by the
ELECTRICITY MAGAZINE CORPORATION
MONADNOCK BUILDING, CHICAGO
Long Distance Telephone: Harrison 3014

Ed J. Mock and Paul H. Woodruff, Editors James B. Crippen, Associate Editor

New York Office: 1433 Hartford Bldg., 41 Union Square
LAURENCE F. COOK, Eastern Representative
Telephone, Stuyvesant 1672

London Office: 36 Maiden Lane, Covent Garden
S. RENTELL & CO., Representatives

Table of Contents

TERMS OF SUBSCRIPTION

United States, Cuba and Mexico, $2.00 per year; Canada, $2.50 per year; Foreign countries within the Postal Union, $3.00 per year; Single Copy 10 cents.

Distributing Agents: The Western News Company and its International Branches.

NOTICE TO ADVERTISERS

Changes of advertising copy should reach the office of publication not less than five days in advance of date of issue. Regular date of issue, Saturday of each week. New advertisements will be accepted up to within three days of date of issue, but proof of such advertisement can not be shown.

NOTICE TO SUBSCRIBERS

Remittances should be made by check, New York draft or money order, in favor of THE NICKELODEON. Foreign subscriptions may be remitted directly by International Postal Money Order, or sent to our London office. The old address should be given as well as the new, and notice should be received two weeks in advance of the desired change.

Scene from the Eclipse-Kleine Feature Film, "The Golden Sickle."

THE NICKELODEON

AMERICA'S LEADING JOURNAL OF MOTOGRAPHY

Vol. V | Chicago, February 11, 1911. | No. 6

THE PERSONAL EQUATION.

WE hear a good deal about this or that man's ability to meet people as a contributing cause of his success. In fact, it would seem that this ability to greet men as they approach is one of the first requisites of commercial efficiency. The people evidently like to be met. They like to be shaken by the hand and asked how they feel this evening, and if they don't think this weather is pretty nice for this time of year.

To crowd his house an exhibitor will, of course, put on the best show he can possibly get. This does not necessarily mean the longest show or the loudest show, but it does mean the show that best fits the temperament of the average local audience, as indicated by a study of such audiences. And it means, too, in the case of motion pictures, the best possible projection and the best available music.

But we have all witnessed rather poor shows in dingy houses, and have been surprised to see that the attendance was not only excellent, but the same patrons came back night after night. If we studied the situation we probably would find that the manager or proprietor of the theater stands at the entrance with a glad hand and a welcome smile for everybody, and when they go out he asks them how they liked the show and said it was a pleasant evening, and incidentally told them that there was going to be a specially fine show the next evening.

The average picture theater proprietor is not exactly an amusement magnate, especially if his theater consists of a made-over store room. But he should not allow himself to think he is of small importance in the community, no matter how insignificant his theater may be as compared with some of the downtown palaces. He is bound to be an object of local interest. He is established. He has a property. And best of all, he is making money, or at least the people think he is. And so they are glad to have him offer to shake hands with them. They like the recognition as human beings, and the appreciation that their attendance at his theater is worth while.

One of the oldest exchange men in the business recently had a call in the shape of a small exhibitor who was much worried over the fact that his competition was beating him out, although he was showing as good a program as he could afford. The exchange man told him to go back and just stand in his doorway and smile and nod and ask the people how they liked the show. At last account his business had picked up wonderfully, and there was no danger of his giving way to competition.

The glad hand and what it implies is, after all, a large factor in modern life, commercial or otherwise. This is especially true when we are depending upon our direct contact with the public for our livelihood. The people come, of course, merely to see the show; but in the majority of cases they do not come to see any particular film subject or hear any particular song, but just because it is a nice place to go. It follows, then, that if the proprietor can make it a still nicer place to go he will benefit accordingly.

It is not every man who can cultivate the glad hand habit, and he who can has the advantage. And while many a poor show has paid a good profit because of its owner's sociable nature, the real benefit lies in combining a good show and a sociable interest in its patronage. The proprietor who can greet his patrons with a smile, give them as good as they could desire, and then pass them out with a cheery goodnight and an invitation to come again and see a better show, will have everything coming his way.

THOSE LIP MOVEMENTS.

SOME time ago a newspaper reporter in search of copy discerned material for a good feature story in the lip movements of certain motion picture actors, as seen on the screen. The reporter's judgment as to the value of the story was evidently good, for it was rewritten and reprinted in nearly all the newspapers of the country. But newspaper stories are short-lived at best, and the incident might be regarded as closed but for an editorial recently appearing in *American Medicine*. The author of this editorial is unquestionably familiar with his subject, and he gives several reasons why it is hardly likely that the cleverest of lip readers could gather from the lips of the motion picture actor more than an extremely occasional comprehensive word. He points that successful lip reading depends not only upon familiarity with the facial movements, but largely upon the mannerisms of particular individuals; so that while a lip reader might understand the labial movements of a friend, he would find difficulty in interpreting those of a stranger. In fact, it is declared that a lip reader must read an expression several times before he is sure of it.

It is pointed out, too, that some of the complaints were made by women whose very action in the case betrayed their sensitiveness. *American Medicine* asked how these women could have become familiar with the lip movements of such profane and improper expressions as they claimed to have seen. It is plain that lip reading is a peculiar branch of linguistic ability, and can only be learned by close application and through the tedious process of becoming familiar with each individual word or expression.

It is a fact that every reputable motion picture producer long ago pointed out to his actors the dangers of unguarded expression, because of this very lip reading. We know, too, that in some forceful scenes in which feminine players do not appear, expressions may have been used which would not be looked well upon in good society. Of course, it may that a single

instance of this kind has started the whole controversy.

November 1 The Nickelodeon printed an article by Mr. George William Veditz entitled "Motion Pictures for the Deaf." Mr. Veditz is chairman of the World's Congress of the Deaf. His article went into the subject covered by its title thoroughly, and had the revelations of lip reading been of any importance he surely would have mentioned them.

THE SIZE OF THE PICTURE.

THE dimensions of the motion picture screen depends, of course, upon the size of the house in which the screen is located, and upon the degree of magnification of the original picture which it is judicious to use. Another important factor, which, however, is sometimes disregarded, is the size of the figures in the projected pictures. These should be, to get the best results, as near life size as possible; that is, of the size they would appear if they were really living actors upon the stage. A screen about sixteen feet in its horizontal dimension probably comes the nearest to providing this effect with the average run of films. and a screen twenty feet wide is about as large as we ever find, even in the biggest picture theaters.

It is possible to get quite a field of action into a twenty-foot limit, or even a fifteen-foot limit. Taking into consideration the background of the picture and the effect of perspective, the field of vision is the same as that which would be apparent through a window sixteen feet wide; the observer being located at a point whose distance from the screen is the same as the focal distance of the camera which took the picture. This is the factor which limits the present performance at the motion picture stage.

The motion picture drama of today is practically perfect, within its limitations. By this we do not mean that the actual pictures are dramatically perfect, even a small portion of them, but they are potentially perfect because they have at hand all the materials for perfection. Indeed, we already have had pictures which are photographically perfect and we have had others which are as near dramatically perfect as human ingenuity can carry them. When we have combined the two qualities in one picture we see that we have no further possibilities for development.

Every exhibitor knows that the novelty has long since worn off motion pictures. Even now the public criticizes any picture which does not come to its vague, but nevertheless real, standard of excellence. It is obvious that when we have gained practical perfection with motion pictures in their present form, it will not suffice to rest upon our oars and merely be satisfied with what we have done. We must then look for an opportunity to extend and develop the art still further.

There are, of course, a number of technical possibilities for the improvement of the motion picture—the word improvement meaning here, a means for making them more attractive to the public. Natural color-motography is one possibility. This is already being developed by several experimentors and promises early fulfillment. Another attractive feature would be stereoscopic projection.

But there is a possibility in another direction that will add greatly to the value of motion pictures and present no great difficulty. This is, in a word, to increase the size of the picture stage to that of the ordinary legitimate theater stage.

It is pretty hard to say off-hand just what the width of the average legitimate theater stage is. There is a pretty wide range between the New York Hippodrome and some of the country opera houses. But suppose a width of forty feet, wings to wings, as calculated to accommodate the majority of dramatic projections. A motion picture which, when projected, measured forty feet across the screen, would depict any of the regular dramatic productions or any productions of equal magnitude, especially arranged for the camera.

There is no question but that this forty-foot picture will have to come some day. And it does not mean the present picture magnified to a larger degree and showing larger figures on the screen. It means preserving the present approximateiy life-sized projection, while increasing the field of action by twice or more. It may necessitate picture films two and three-eighth inches wide instead of one and three-eighths, with cameras and projection machines to correspond. Or it may mean merely improvement in the sharpness of photography and the fineness of photographic emulsion that the present picture size may be enlarged to forty feet on the screen, the figures being taken smaller in the camera to compensate for the increased magnification. Probably a compromise between the two sizes will be found, and we will have a film picture whose dimensions are about one and one-half by three-quarter inches, and whose screen is forty by twenty feet. The use of such a size would open a brand new vista of possibilities to the picture producer.

THE CHURCH AND THE MOTION PICTURE.

ONE of the interesting features of motion picture progress lately has been the number of ministers who have been converted to the motion picture. At least a dozen ministers have, during the past month. expressed their conviction that the motion picture is not really as bad as it seemed, and may be turned to beneficent social uses. Several of them have enthusiastically seized upon it as a religious tool and installed projecting machines and other apparatus in their churches. Typical of this change of attitude is an article that appeared in *The Congregationalist,* a religious publication, not long ago. The following interesting quotation is extracted from that article:

"Within almost a single round of seasons the picture show has become an immense enterprise, a world-wide amusement, a universal influence.. When you hear that in France during the eviction of the ecclesiastics the films played such an important part that they nearly created a rebellion; that Sweden has endowed a moving picture theater for presenting historical scenes; that a foreign manufacturer made an offer of $200,000 for the privilege of taking the Oberammergau Passion Play, which offer was refused—you begin to get an idea of the magniture of the subject. Not only this, but the moving picture is rapidly taking its place beside commerce and foreign missions in making for a world brotherhood.

"Not only because the moving picture has become so widespread an influence is it of interest to us; but also because its possibilities have only begun to be uncovered, and in this undeveloped and unknown future educational and religious agencies seem destined to have a great share. While no one can be blind to the fact of its great possibilities for evil, the moving picture has neither done so much harm nor deserved such imprecations as have been put upon it by well-meaning but uninformed Christian people."

Experiments in Motography in 1886

From an Old Paper by E. J. Marey

MOTION is an essential attribute of life; it is the most apparent, if not most easily understood, manifestation of it. In the body of a living being motion exists everywhere; the blood circulates, the heart beats and arteries pulsate, the lungs alternately fill with air and empty themselves. Every organ undergoes alternative variations in volume; rhythmic movements of expansion and contraction are connected with the intermittent flow of blood as it traverses them. The muscles continually vibrate under the influence of motor nerves. In fine, there is not one element of the organic tissues which, in its evolution, does not change its form, its volume, and its position. Thus, weak or strong, slow or rapid, motion prevails in all the parts of living beings.

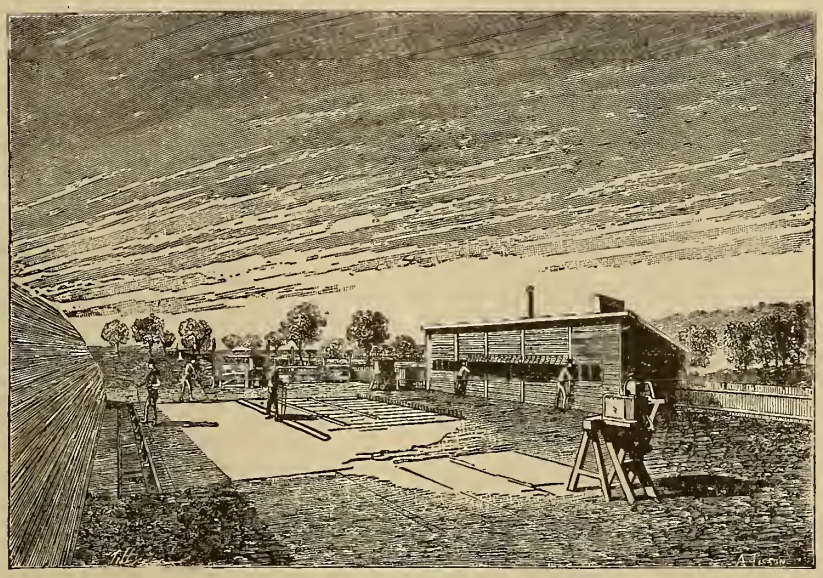

Muybridge's Arrangement for Taking Chronophotographs of Running Horses. From an Old Print.

Besides these internal or organic movements sometimes so slight that our senses cannot perceive them, there are others, entirely external, rapid, extended, energetic. These are the movements of the subjective life; such are the locomotion of man, the different gaits of quadrupeds, the flight of birds, etc.

You can easily imagine the difficulties encountered in imparting to fixed apparatus the movements of a body that changes position, and to reduce these movements when too extended, too violent or too rapid, as in the case of a running quadruped or flying bird. Some attempts had already given important results. Thus I have obtained from large birds the curves of wing movements during flight, and caught the rhythmic beat of each foot of a horse in different gaits. Again, one of my students, now himself a master, Professor Carlet of Grenoble, has inscribed with great precision certain movements of the body and limbs of a man walking. But for the complete study of the movement of a man and animals, mechanical methods of inscription must give way to another application of the graphic method more simple and perfect, because it inscribes the movements without impeding them in any way. I refer to chrono-photography.

A long period has passed since our learned physicist and astronomer, Janssen, by a species of intuition, prophesied that photography would sooner or later supply the means of analyzing the movements of animals. A skillful photographer of America, Mr. Muybridge, in part solved this problem by brilliant experiments. I wish briefly to describe his method of work.

Mr. Muybridge arranged one after the other a range of photographic instruments facing a white screen, before which passed an animal walking, trotting, or galloping. As fast as the animal advanced, the shutters of the lenses opened and permitted the taking of a negative of the animal. These views differed from each other, because they were taken in succession. They showed, therefore, the animal in the various attitudes which he had assumed at different instants during his passage across the field covered by the instruments with which the pictures were taken.

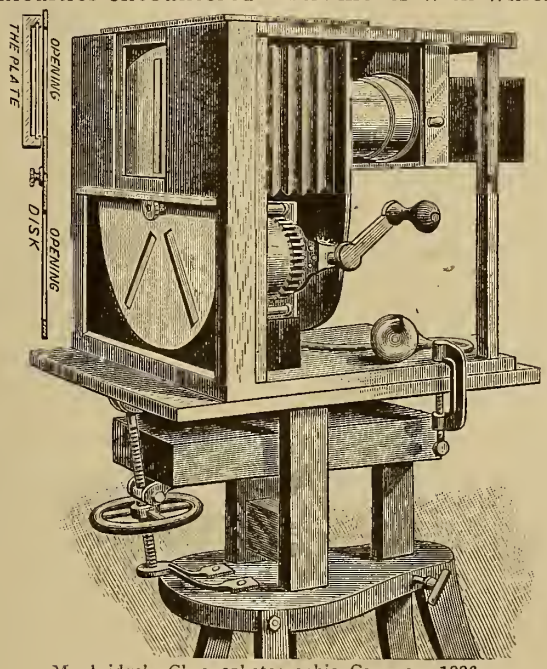

Muybridge's Chronophotographic Camera. 1886.

Figure 1 shows in detail the installation of Mr. Muybridge's apparatus. To the left is the inclined screen, which throws into the cameras a dazzling white light, bringing out *en silhouette* the body of the animal. On the right is the range of cameras, each one provided with a shutter actuated by a powerful spring, so arranged as to expose the objective for an extremely short time, estimated by the author as one-fifth of a second. To insure the successive opening of these shutters as the animal advances, threads may be observed stretched across the road. The animal breaking these threads one after the other opens an electric circuit and causes the successive springing of the different camera shutters.

Mr. Muybridge varied his experiments most skillfully. He studied the gaits of different animals and those of man, jumping, vaulting, and handling of various utensils. Finally, he collected in a voluminous album an interesting series of attitudes of men and of animals in motion. The whole collection of these studies possesses great interest for artists.

Since this time the progress of photographic chemistry has wonderfully increased the sensibility of the plates, and at the present day more than mere silhouettes of moving animals or men can be obtained. In good light, full images, with all desired relief, can be obtained. If, for example, a naked man in motion is photographed, all the muscles of the body are perfectly traced in relief, indicating the part taken by each of them in the movement executed.

The silhouettes obtained by Mr. Muybridge would always suffice to illustrate the successive phases of displacement of the members if they were taken at equal intervals of time; but the arrangement adopted for bringing about the formation of the successive phases causes irregularities in the extent of these intervals. The threads yield more or less to the stress before breaking, and, moreover, the progress of the horse is not at an even rate of speed. Nevertheless, Mr. Muybridge endeavored to develop from the series of images the trajectory of each leg of the horse; but the curves obtained in these laborious attempts had not sufficient precision. A very simple method enables us to obtain with perfect fidelity the trajectory of a body in movement. It is the photographing of this body in front of a black surface.

If a photographic apparatus is directed against a black screen, the objective can be uncovered without effect on the sensitized plate, as it will receive no light. But if across the plane of and parallel with this screen a white ball, strongly illuminated by the sun, is thrown, the image of this ball will be reproduced upon the plate, which, on developing, will show the trace of the ball in its trajectory, just as with those lines of fire of which our eye receives a momentary impression when a lighted piece of charcoal is waved through the air at night.

Photography against a black background is invaluable for determining the points in space passed over by a body in movement. No other method can express the line followed by a luminous point in darkness. Quite recently, M. L. Soret, of Geneva, has used this method in analyzing very complicated movements. Working in darkness, he photographed the trajectories of an incandescent lamp under various movements.

It is evident that a limitless number of varieties of movement can be analyzed by chrono-photography.

All the figures studied by geometricians, and which they imagine as generated by the rotation of curves, the translation of lines, and the intersection of planes, all these figures, I repeat, can be actually produced in chromo-photography, by successive images of these curves, lines, and planes that are displaced.

The sharpness of the images depends on the shortness of the time of exposure corresponding to each position. It is, in fact, necessary that the body in motion shall not have time to be sensibly displaced while its photograph is taken. The time of exposure therefore which I have selected is the one-thousandth of a second. I sometimes use less, for, as regards certain very rapid movements of the wings of birds, this period is too long. In recent experiments I have got good results with exposures of one two-thousandth of a second.

Doubts have been expressed as to the reality of these short times of exposure, and with ordinary shutters it would be quite difficult to attain this quickness; but the perforated disk that is used in chrono-photography gradually acquires a speed of rotation that may be very great. Figure 2 shows the arrangement of this disk to which a rotary movement is imparted by powerful gearing, controlled by a regulator. As soon as the disk attains a speed of ten turns a second, the regulator maintains this speed with perfect uniformity, with chrono-photography in addition as a control. The disk moves in front of the sensitive plate a few millimeters (1 mm.=0.039 inch) distant from it only. Then, knowing the angular value of each of the openings, the period of exposure is rigorously deduced therefrom.

National Cash Register Salesmen See Themselves

The Hundred Point Club, an association of salesmen connected with the National Cash Register Company, recently held their annual convention at Dayton, Ohio. Among the entertainments devised for their pleasure was a motion picture show, the feature of which was a series of reels showing various divisions of the Hundred Point Club on their way to the convention.

Motion pictures were exhibited showing the departure of the Hundred Pointers of Districts 7 and 12 from Chicago and their arrival in Dayton. Pictures were also shown of the Chicago delegation arriving at Richmond, Ind. Following these were moving pictures of the New York Special and its arrival in Dayton. These pictures were taken Sunday, sent to Chicago by special messenger, developed, and returned to the factory in time to exhibit them at this entertainment, held Tuesday night.

A demonstration of Kinemacolor was also given. The machine and operators were brought to Dayton from New York especially to demonstrate it to the Hundred Point Club. Arrangements have been made with the Kinemacolor company to have experts from England and Germany come to the National Cash Register factory next May and June to take a series of films for their use.

Progress of Parcels Post Bill

Congressman Sulzer, who has been an advocate of parcels post for years, has obtained assurances that he will receive recognition to bring up at this session his bill to establish the system. There is little doubt if he does that the House will pass the measure. What its fate may be in the Senate this session is not so clear. Once the matter is brought out into the House, however, its future consideration is assured.

John M. Stahl, the President of the Parcels Post League, called on President Taft and was assured that all the President could do to help on the cause would be done. The friends of the idea have been for the past few months conducting a postal card poll of the entire country, and 6,000,000 have been received, representing the opinion of every part of the country. These have been tabulated, and as far as the work has now gone it shows that the sentiment in favor of parcels post is overwhelming.

Producers of Edison Photoplays

The Men Behind the Pictures

THE producer bears the same relation to the motion picture industry that the engineer does to the electrical or mechanical industry. He is, after all, at the very foundation of the business. He must take the raw material furnished by the scenario writers—and some of it is pretty raw—and build upon it the finished, living story which appeals to literally, millions of observers. He must be a designer as well as an artist, a stage manager and a dramatist.

Thursday Evening Conference of Edison Producers.

Take the case of Mr. Horace G. Plimpton, manager of negative production for the Edison Company, for example. It was related in the last number of The Nickelodeon that before Mr. Plimpton became producer-in-chief for the Edison people he was head designer for a carpet concern. We believe it is not too far fetched to say that his ability to superintend the designing of carpets has had something to do with his success as a producer of motion pictures. Fundamentally any kind of design is invention; and so also literature, drama and art are invention, or require a kind of inventor's ability for their production.

The producers are almost entirely responsible for the motion picture films we see today. If there are flaws in the picture that we cannot overlook, it is the producer's fault. If the production is exceptionally fine, true to art as well as to life, it is the producer who should receive credit. So it is a pleasure to know something of the personality of these men who are generally known only by their works. For the day has not yet come when the name of the producer and the *dramatis personae* are blazoned forth upon a film title, as they should be.

The producers of the Edison Company, by which is meant the stage directors who superintend and are responsible for the action of the picture as well as the development of the plot used, are four in number —Messrs. J. Searle Dawley, Ashley Miller, C. Jay Williams and Oscar C. Apfel. A producer naturally, like any other man, develops a particular aptitude for some certain line of work. Mr. Dawley, for example, has put on some of the biggest and most sumptuous productions the Edison Company has ever produced. As specimens of his work may be mentioned "The Stars and Stripes," "Through the Clouds," "The Red Cross Seal," "Eldora, the Fruit Girl," "An Eventful Evening," "The Black Bordered Letter," "The Doctor" and "The Price of Victory." The latter has not yet been released.

Mr. Miller's specialty is high-class comedy and handling fine situations, which relate rather to the workings of the mind or mental complications than big dramatic situations. Some of his productions are "The Man Who Learned," "The Captain's Bride," "Pigs Is Pigs," "A Christmas Carol," "In the Days of Chivalry," "The Link That Held," "Mike the Miser" and "The Rajah." This last is not yet released.

Mr. Williams is the comedy producer. He did not join the Edison forces until about the 1st of November, so not many of his pictures have yet been released. We may mention, however, "The Gardiner's Ladder," "Sleep, Gentle Sleep," "Uncle's Birthday Gift," "The Lover and the Count" and "The Ransom of Red Chief," the last not yet released.

The photograph on this page shows a view of the Thursday evening conference held in the office of Mr. Plimpton. This is a regular function, which takes place every Thursday, and at which the producers decide upon new plots and generally talk over plans for the ensuing week. In the picture Mr. Plimpton will be seen at the head of the table. On his right is Mr. Dawley and next to him Mr. Miller. On Mr. Plimpton's left is Mr. Charles J. Brabin, assistant stage director. He is the gentleman with the pipe. Next to him is Mr. Williams. Mr. Apfel does not appear in this picture, which was taken before his advent into the charmed circle.

Mr. Brabin was not mentioned among the producers. His work is rather to co-operate with all the producers, assisting the stage direction in its planning as well as its execution, and relieving the producers of much of the detail of getting scenes ready.

Someday, as we hinted before, the producer's name will appear upon every motion picture subject turned out. By looking a long way into the dim

future we may even hear a call for "author" when a first run film is shown. And when that call comes it will in many cases be the producer, as well as the scenario writer, who deserves the place before the curtain.

Contempt Charge Against Imp Withdrawn

On January 12, 1911, an order to show cause, signed by E. Henry Lacombe, United States circuit judge, and addressed to the Independent Moving Pictures Company of America, Thomas D. Cochrane, its general manager, and Carl Laemmle, its president, called upon them to show cause why they should not be adjudged in contempt of court as for disobedience of the injunction theretofore issued in the case and served on the 21st day of March, 1910. That injunction of March 21, 1910, had been issued because of the use of Warwick and Pathé cameras prior to that time. The order to show cause was based upon the affidavits of Edwin I. Standish, Joseph F. McCoy, Franz Listemann and Charles A. Buckbee, and later an affidavit of Albert C. Wiechers was added. These affidavits set out the use of Gaumont cameras in July and September, 1910, and charged same as an infringement of the Edison patent and a violation of the injunction. The affidavits also set out the alleged use of a Warwick camera in June, 1910, and charged that as an infringement of the patent and a violation of the injunction.

The return of the order to show cause was later extended by the court to January 20, 1911. On that day counsel for the defendants, Hon. William J. Wallace, formerly senior U. S. Circuit judge for the Second Circuit, and William Houston Kenyon, Esq., of the firm of Kenyon & Kenyon of New York, appeared before the court prepared with affidavits, upwards of sixty in number, setting out the long, extensive and general use of Gaumont cameras and other similar cameras of the beater type to the knowledge of the complainant and its emissaries; also setting out that no suit had ever been brought against any such camera as an infringement or any claim made or notice given that it was an infringement until the episode in the case against the Champion Film Company in December last; also that the beater camera had not been really defended in that case and that its construction and mode of operation and the results obtained by its use had been misrepresented by the complainant to the court in that case; that the Gaumont and other cameras of the beater type, when properly understood in their true construction and mode of operation and results, do not belong to the Edison or Warwick type of positive feed devices operating by the interlocking of a pin or stud with perforations in the film to produce intermittent motion, but belong rather to the Biograph type, where there is more or less possibility of slip, and which the Circuit Court of Appeals in the case against the American Mutoscope & Biograph Company held was not an infringement of the Edison patent; and finally setting out new references of the prior art which were not proved, or known to the Circuit Court of Appeals, in either of the former cases against the American Mutoscope & Biograph Company, and which disclose the Edison positive intermittent feed device in which a pin or stud interlocks with perforations in a tape. Complainant's counsel, J. Edgar Bull, Esq., of the firm of Gifford & Bull, and John Robert Taylor, Esq., of the firm of Dyer, Dyer & Taylor, pleaded with the court for a postponement of the hearing, owing to the great number of the defendants' affidavits, and for leave to file replying affidavits. The court granted a postponement to Wednesday, February 1, at 11 A. M.

It is stated that the defendants' affidavits showed that substantially its entire business since March, 1910, when the preliminary injunction was served upon it, had been based upon, and had proceeded by the use of, the Gaumont cameras in question. The paper read by complainant's counsel in open court was in full as follows:

> The complainant hereby formally withdraws so much of its motion to punish the defendant for contempt as relates to, or in any way bears upon, the defendants' use of the Gaumont or so-called "beater" type of camera referred to in the motion papers, and confines itself in the prosecution of the motion to those violations which involve the use of the Warwick type of camera. We take this action because it is evident from the character of the reply affidavits, coupled with the fact, announced in open court, that the Champion case, in which the question of infringement of the Gaumont camera was decided, is not to be appealed, that it is defendants' plan to try out the question of infringement of the Gaumont camera in the Court of Appeals in these contempt proceedings, and not on a preliminary injunction motion; and we agree with the views of defendants' senior counsel, expressed in open court, that a motion to punish for contempt is not the proceeding in which to try out a question of infringement. If counsel desire to have the findings of this court with respect to the Gaumont camera reviewed, they may do so by taking an appeal in the Champion case.

Later in the day, February 1, complainant's counsel, Messrs. Dyer, Dyer & Taylor, formally withdrew a motion for preliminary injunction pending in the Eastern District of New York, and which stood for hearing on February 10, and which would have brought up the question of infringement by the Gaumont camera, not on motion for attachment for contempt, but on a motion for prelimnary injunction. The circumstances of that withdrawal were these:

On November 28, 1910, notice of motion for preliminary injunction was served upon Adam Kessel, Jr., Charles O. Bauman and Louis Burstein in the suit by the Motion Picture Patents Company against them in the Eastern District of New York. These papers alleged only the use of Warwick or similar cameras. The defendants, in December, 1910, filed replying affidavits in which they referred to the Gaumont camera and denied the use of pin or stud fed cameras. This was before the decision in the case against the Champion Film Company, which latter decision was filed on December 28, 1910. Subsequently, and on or about January 7 to 10, 1911, complainant made and filed rebuttal affidavits fully describing the Gaumont camera and introducing photographs of it, and alleging its use by the defendants in July, 1910, (a use which had not been referred to in complainant's original affidavits of November 28, 1910). On January 25 defendants' counsel notified complainant's counsel that leave would be asked to file affidavits defending the Gaumont camera from the charge of infringement, and on substantially the same affidavits that were to be used for that purpose in the case against Carl Laemmle and the Independent Moving Picture Company, and this notice was repeated on January 31, after those affidavits had been served in the latter case. This motion for injunction against Kessel and others would, therefore, have given complainant an opportunity to try out the question of infringement on a motion for preliminary injunction. But late in the afternoon of February 1 complainant's counsel, as stated, withdrew this entire motion for injunction in all its branches.

A Home-Made Motion Picture Camera

By C. K. Larson

MOTION picture cameras are generally regarded as being quite complicated, and few amateurs, however interested they might be in the subject, would consider it within their ability to construct a camera capable of taking such pictures. As a matter of fact, however, motography is really quite a simple proposition. The pictures are taken upon the same kind of film that is used in the Kodaks and ordinary hand cameras which are so familiar to all of us; the only difference in operation being that in the motion picture camera as soon as a picture is taken the film is moved forward one picture length and another exposure made, and so on, at the rate of about sixteen to the second.

Now, an ordinary camera used for taking still pictures is nothing but a box provided with a lens and shutter at one end, and a sensitized plate or film at the other end. Therefore, all we need to make a motion picture camera out of such an instrument is some device for stepping the film forward a picture length every sixteenth of a second, and yet stopping it long enough to make the requisite exposure on each division. The problem is, of course, a purely mechanical one, and if the device is simple enough we will have no difficulty in constructing a motion picture camera.

The motion picture camera described and illustrated here is not intended to be used for commercial purposes. Indeed, it does not claim to be much more than a toy. It will have served its purpose if the amateur photographer can, with its aid, secure a few dozen feet of animated photographs of such subjects as are dear to his heart.

Every picture theater manager and operator has at his command means for projecting motion pictures. Pictures which might not be fit to project before any audience, might nevertheless prove extremely interesting at a private showing to the friends of the one who took them. The camera described here uses standard film, 1⅜ inches wide with perforations every three-sixteenths of an inch. As film of this size will fit all projecting machines no special projector is mentioned.

As it is not claimed that the pictures evolved from this apparatus will be anything more than an amusing experiment, neither is it claimed that the camera is in any sense non-infringing of existent patents. The fact that the instrument has no commercial importance whatever, obviates the objection on this score. In the drawing, Fig. 1 represents the front view and sectional elevation of the camera. *A* is the spool of unexposed film. *B* is the lens, which should be mounted at its focal distance from the film at the back of the box. *C* is the cylinder which acts as a combined shutter and intermittent movement. *DD* are partitions in the box, which keep the light which may be diffused from the lens from striking the film at either side of the shutter, while at the same time they act as guides for the film at the rear of the camera. Their rear edges are covered with black velvet, as shown. The back of the box is a hinged door, opening at the side to allow insertion and removal of the film, and acting also as a guide for the film when closed. *G* is a strip of black velvet a little wider than the film, which is pasted on the inside of the door so that it bears lightly against the lower ends of the partitions *DD*. The film passes between the ends of the partitions and the velvet strip with some friction, which keeps it from moving through momentum. *P* is a wire guide for the film inserted into the lower partition. In inserting the film in the camera the end is threaded through this guide before the rear door is closed. Nothing more need be done with the free end of the film, which is pushed down by the action of the shutter and gathers in folds in the bottom of the box.

Fig. 2 is a detail drawing of the cylinder *C*. This, as shown, is 1¾ inches in diameter and 2¾ inches

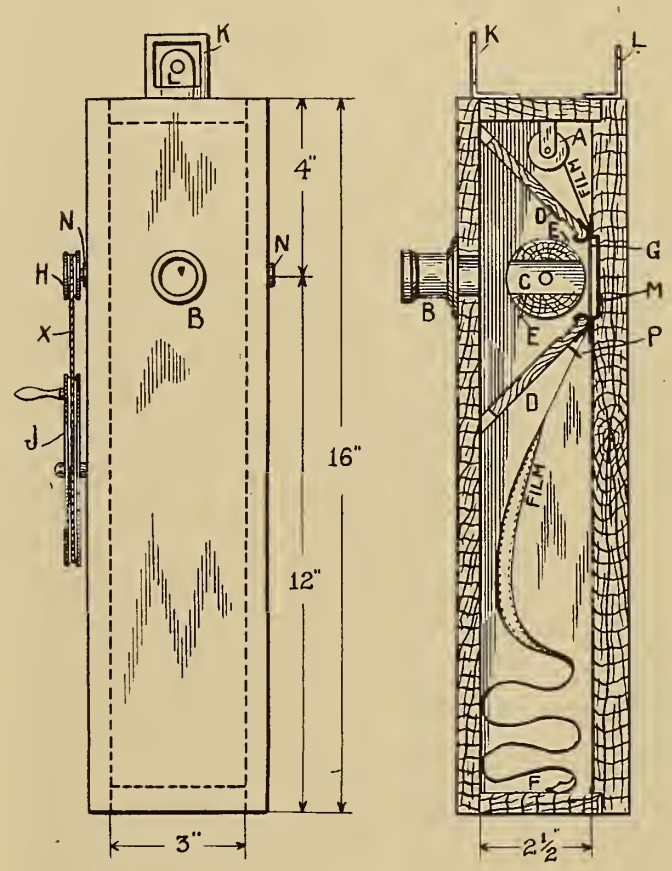

Fig. 1. Front View and Cross Section of Camera.

long. Along one of its diameters a square opening is mortised, ¾x1 inch, as shown, which admits the light to the film in certain positions. This cylinder is, of course, of wood turned up, and the hole mortised with a chisel or in any other convenient way. The hole *R*, drilled the length of the cylinder at its exact center, is ¼ inch in diameter. Into this hole at each end of the cylinder is driven a short length of ¼-inch steel rod to act as a shaft or spindle on which the cylinder turns. At the outer end of one of these spindles is placed a small grooved pulley about one inch in diameter.

The box itself is, as shown, 16 inches high, and its inside dimensions are 3 inches by 2½ inches. The

lens, and consequently the center of the cylinder, is located four inches from the top.

E in the cylinder represents sprockets, which must be placed carefully and exactly in the location shown by the drawing. These sprockets are merely small pieces of metal cut to the shape shown, and pushed into the surface of the wood cylinder with a pair of plyers. Their object is, of course, to catch the perforations in the film as the cylinder revolves in the direction shown by the arrow, Fig. 1. It will be seen that when the upper sprocket, which is approaching the film, engages a perforation just beyond the upper partition, it will carry the film downward until the sprocket disengages from the perforation at the lower partition. This distance of travel must, of course, be exactly three-fourths of an inch, as that is the height of each picture. Obviously the apparatus requires some adjustment to meet this condition, and the adjustment is provided as follows: A front view of the camera shows at *N* two strips of wood, which are screwed to the sides of the camera. Holes in these strips provide bearings for the ends of the spindles which carry the cylinder *C*. These spindles pass through, not round holes, but slots cut in the sides of the box. The slots being horizontal, allow of the adjustment of the cylinder nearer to or farther from the film as operation may demand. The intention is to set the machine up with the two strips *N* fastened temporarily to the sides of the box and carrying the spindles of the cylinder. The machine may then be operated with a piece of old film, and the cylinder adjusted back and forth until the sprocket *E* just moves one picture length at each half revolution. When this result is obtained the strips *N* may be fastened permanently to the box. At *M*, Fig. 1, it will be seen that grooves are cut out in the back door of the camera so that the sprockets may work freely. The black velvet strip *G* is slitted where it covers the grooves for the same purpose.

It should be noted that the inside of the box must be painted a dead black throughout, and every corner that looks at all suspicious should have a strip of black paper pasted over it. Along the edges of the back door strips of black velvet are glued to insure the joint

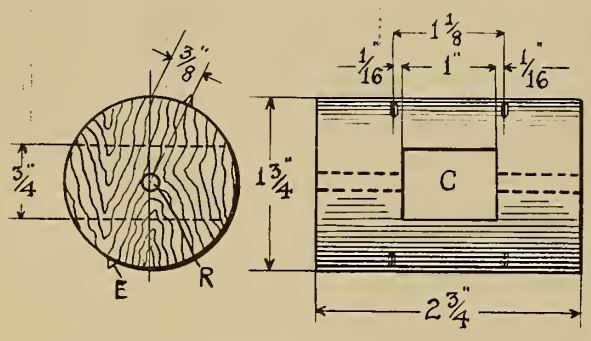

Fig. 2. Detail of the Shutter.

being absolutely light tight when the door is closed. The shutter, too, is painted a dead black inside and out. The pulley J, with a crank on it is about 3 or 3½ inches in diameter, and it is geared to the small pulley *H* by means of a small round belt. Owing to the backward direction of rotation of the cylinder *C*, when viewed from the right, the belt is crossed, as shown at *X*.

The operation of this machine will be readily understood. As the crank is turned the cylinder revolves; the film immediately behind it is exposed through the mortised hole in the cylinder. During this time the cylinder does not touch the film, and consequently the latter remains stationary. Then, as the hole in the cylinder turns out of range of the lens, the sprocket *E* catches the perforation of the film and

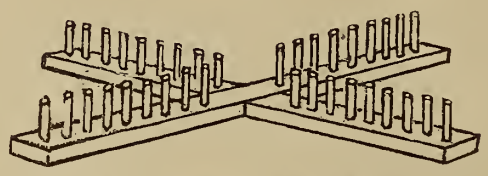

Fig. 3. Cross-Bar Developing Rack.

moves it down three-fourths of an inch. An instant later the sprocket has disengaged itself, and the hole in the shutter is exposing the next section of film—and so on, as rapidly as desired. Of course, the average should be about sixteen pictures per second. The reel of film *A* is supported by spring wire, and may be inserted or removed readily.

Next is the device shown by *KL*. *K* is a strip of metal with a square opening one inch wide and three-fourths inch high—just the size of the picture. *L* is another strip of metal with a one-eighth inch round hole in it. The distance from *K* to *L* is the same as the focal length of the lens of the camera. The device, therefore, acts as a view finder, as the eye applied to the hole in *L* will see through the frame, *K*, approximately the field covered by the lens of the camera.

Just a word about the development of the film negative taken with this camera. By far the simplest device for developing short lengths of motion picture films is used in the so-called pin-tray method. This consists of a pair of cross-bars with vertical pins driven into them, about which the film is wrapped in concentric spirals. The whole thing, cross-bars and all, is then placed in a large tray of developer—the process of developing, fixing and washing being much the same as with a short piece of a film or a plate. It is stated that a tray twenty inches square, with pins half an inch apart in eighteen-inch cross arms, will hold a hundred feet of films. The illustration, Fig. 3, shows such a pin cross-arm arrangement, and is taken from the "Handbook for Motion Picture and Stereopticon Operators," by C. Francis Jenkins and Oscar B. Depue.

For printing positives from such negatives nothing is necessary but to run the positive and negative together, in contact, over a single sprocket wheel, which is located opposite a small opening through which light shines. The speed of the sprocket and strength of the light will then decide the length of printing necessary, which must be determined by experiment. A print is then developed in the same way as the negative, and after drying is ready for projection on any ordinary machine.

Uncle Joe is Motographed

Uncle Joe Cannon and Champ Clark, Speaker and Speaker-elect of the House of Representatives, recently posed for the moving picture man. The pictures have been ordered by European interests.

Motion Pictures that Really Advertise

By Watterson R. Rothacker
General manager of the Industrial Moving Picture Company, Chicago.

NOW, that moving pictures are recognized by the advertising fracternity for their value as an advertising medium, there are the usual number of hasty ones who seem to think that the mere existence of the value is sufficient, and that anybody with a camera can make moving pictures which will advertise.

As a matter of fact, about the only thing a poorly arranged series of moving pictures will advertise is the mistakes and misapprehension of the producer and the circumstance which brands the advertiser as a gull.

Can the average layman usurp a place at the copywriter's desk and "make good?" Certainly not, until whatever inherent and natural ability he may have has been qualified by actual experience.

It is reasonable to believe that the negative film of a moving picture subject which is made to advertise, corresponds to the "copy" of the ad writer—their purposes are identical. Following this analogy permit us to compare the camera, developing and printing machines, etc., to the mechanical things in general advertising which make the copy ready for the press and print it for public inspection.

In both instances the mechanical operations play important parts and contribute their pro rata, but the success of the whole plan is dependent on the idea, and its materialization in the hands of the expert who either writes the copy or arranges the story and its setting for the camera man.

There is a radical difference which distinguishes between the good producer of advertised moving picture plays and the producer of good advertising moving picture plays. It is similar to the distinction between the clever writer of stirring romantic narratives which appeal to imaginative minds, and the calculating writer of advertisements in which pretty words are merely used in an introductory sense, or to disguise and veil cold, hard facts which are hurled at the prospective buyer.

The first question a man who contemplates the use of moving pictures as a publicity agent should ask himself is: "Will my proposition stand for pictorial proof?" The reliability of moving pictures and their power to reproduce a subject, as it acutally is before the camera, demand that the subject live up to its advertised claims. Therefore, the man who advertises in print the magnitude of his factories, etc., and so words the reference as to cause the reader to construe it as a statement of possession, finds that in moving pictures his opportunities to misrepresent are minimized.

After it has been decided to use moving pictures in a campaign and they have been taken care of in the advertising appropriation, the right move is to analyze the advertising story which is to be recorded on the negative film as "copy." After this has been done and the pro and cons have had their inning, it is reasonable to assume that the skeleton of the story is before us. Now, it is ready for the dressing. In this particular instance we throw over the naked facts a veil of interest, believing, as is in the case of the veiled or masked beauty, that this softening influence will put a keen edge on the curiosity knife which is invited to cut through and find some selling arguments. The veiled lady we have taken the liberty of using as an example hides her name (at least in the majority of books we have read the author has made her do so), but the skilled producer of the advertising moving pictures makes no such mistakes. His mistake will be quite unpardonable, however, if by repetition of bold commercialisms on too frequent sub-titles he breaks the sequence of his real attraction.

I have previously stated a number of times that, in my opinion, advertising moving picture subjects should be presented with the idea in mind that their story told apparently without advertising will deliver their advertising message in a more effective manner than can be done by blunt commercial announcements. The endeavor to arouse the buying instinct should be entertaining and the opportunities for this desirable combination are unlimited in moving pictures. But care must be taken that the advertising purpose is not sacrificed.

While it is true that advertising implied by an enjoyable story told on film is a perfect realization of some of the possibilities of animated photography, there are in the commercial world more than a few subjects where a straight exposition of a manufacturing process or an unadorned demonstration of the use and operation of farm, mining, milling, irrigating, dredging, hoisting and other machinery is sufficient unto itself to interest the class of people whose impressions would prove of advantage to the advertiser. A special circulation plan is required for this class of films, and this should be under the jurisdiction of the sales department, as they are (as a class), primarily a sales adjunct.

In the current issue of *Signs of the Times* appears an article headed, "The Illustration in Advertising." In it the author, Fred J. Runde, ventures a "prediction made for the picture method." Mr. Runde's prediction is logical and progressive, but it stops a long ways this side of moving pictures. We

infer that this article is written to advocate the use of more pictures and less reading matter on signs in general. Mr. Runde has used some good arguments for illustrated signs . These arguments and statements also hold good where advertising moving pictures are concerned. We reproduce excerpts from this article and wish to assert that every point advanced in favor of the illustration in advertising, favors moving pictures, and that the power of moving pictures as an illustrative force is so comprehensive, inclusive and superior as to brand it as the ultimate advertising means.

Here we quote: "The new language, the American language—the language of pictures—is the outgrowth and development of the American business man's ingenious method of expressing his words advantageously." "I am convinced beyond a doubt that the picture language is the language of our coming advertising, and that the picture will eventually completely take the place of type."

"Our large advertisers these days are making the illustrations the main features of their advertising." "The reason for this constant increase in the picture value in all forms of advertising can really be laid down to the fact that one can catch the point much more quickly than by reading type." *"The picture is valuable because it has life in it."* (Moving pictures make a perfect score on this count.) "The alert mind catches the point quickly, and if its application be well made, instantly surrenders to its logic." "There seems to be something about a picture which will quicken into activity even dull and heavy minds—hence the use of illustrations."

"Even some of our great men, like Abraham Lincoln, used parables when trying to convey their thoughts and persuade their listeners." "Abraham Lincoln's most powerful and convincing speeches were those in which he relied more upon parables than anything else." "He knew that a good pertinent parable which contained the gist of the principal idea he wished to instill into the minds of his audience, would bear more fruit than any eloquent statement he might make."

"The same thing applies to our advertising today. In interesting people and putting them in a mood for exchanging cash for commodity, there is no stronger aid than the use of a good, strong, interesting picture suited to the matter in hand."

"It's the modern way of opening the public's purses. It does even more than bringing money to the advertiser; it brings confidence. The picture, or illustration, will do more in advertising to create confidence in the goods advertised than type ever could hope to do."

"The value of confidence in business today canot be overestimated, and in our advertising the illustration is the secret."

The above quoted remarks, in common with others which may be extracted from any argument in favor of illustrated advertising, substantiate the claims we make for moving pictures and boost their reputation as an advertising medium and publicity agent.

Film Men Quarrel

Philadelphia newspapers report that the litigation between Lewis M. Swaab, who has a moving picture exchange at 338 Spruce street, and what he terms is a so-called moving picture trust, over the possession of 300 reels of films, came up for hearing before Judges Sulzberger and Wiltbank January 30 on Swaab's motion to quash writs of replevin obtained against him for the recovery of the films. No decision was given.

Swaab contends that he paid $30,000 for the films several years ago, and when he refused to surrender them that writs were obtained against him by the following companies: The Selig Company, the Biograph Company, the Lubin Manufacturing Company, G. Melies, George Kleine, Pathé Freres, the Edison Manufacturing Company, the Kalem Company, the Essanay Film Manufacturing Company and the Vitigraph Company. Swaab maintained that his license as a dealer had been canceled, and that the petitioners were no longer permitted to lease films to him.

The entire affair is so complicated that it is likely to involve both Swaab and the associated film makers in litigation that will have one of two results. Either Swaab will be put out of business or he will prove that he is the victim of a monopoly and have action brought against that monopoly by the United States Government. At all events it may prove to be a crisis in the growth of the moving picture industry.

New Theater for St. Louis

The new Talbot Theater at St. Louis will be one of the most complete vaudeville houses west of New York. It will have a seating capacity of 1,600. The site of the new structure has a frontage of 50 feet on Sixth street between Market and Walnut. It is said by Mr. Talbot that the first moving picture show in the United States was on this site. The structure will be a beautiful concrete building and will be strictly fireproof throughout.

Mr. Talbot is receiving bids for the construction of the theater and will let contracts in the next few days. Only St. Louis firms were permitted to bid on the work. The controlling interest will be held by Frank L. Talbot and the rest of the stock will be in the hands of St. Louisans.

A 20-year lease has been taken on the building with an option of renewal. The officers of the company are: Frank L. Talbot, president and general manager; O. B. Welk, vice-president; R. H. Childs, treasurer, and A. E. Bryant, secretary. It is expected the theater will be open to the public August 1.

Motion Pictures Supplant Marionettes

One of the effects of the prevailing moving pictures is to be observed most strikingly in the Italian quarters of New York City. The beloved marionettes who used to illustrate so eloquently the stories of the Italian myths or the mediæval historical episodes have disappeared altogether. There is not at present one of these puppet theaters to be found in the city.

But the expatriated sons of Italy are not bereft of the enjoyment of seeing their national heroes on the stage for that reason. The moving picture shows now offer a full repertoire of these same subjects. From "Johanna of Burgundia" down to the adventures of Rinaldo there is not a legend of the character which the marionettes formerly exhibited that is not to be seen nowadays in much more elaborate form in the moving picture shows in the Italian quarters of New York.

A Pair of Pictured Napoleons

Edison, Gaumont and the Little Corporal

'TIS said of Napoleon that he occupies more pages in the world's history than any other man. His was a great and wonderful nature of contrasts, such as few men have ever possessed, which, coupled with the great power he attained, made him hated by many, and loved by many.

One of Napoleon's marked characteristics was his ability to change those with whom he came in contact from enemies to the strongest of friends and supporters. This trait has been taken as a theme for a most dramatic film and has been made by Edison into a masterpiece of motographic art.

Briefly told, the story is of the son of an old innkeeper who is drafted for the army, and departs for the front. The father, who abhors Napoleon, and all that he stands for, sees his son depart in grief. Later he has a vision in which his son is killed, and on going to the battlefield finds that his vision was true. He returns to his home bearing the body of his son, and

Scene from the Gaumont-Kleine Napoleon.

places it on a temporary bier, illuminated at head and foot by the only candles in the tavern.

Napoleon, chancing to pass that way, stops to write a message of victory, and the room being poorly lighted, demands more candles. In response to this demand a servant attempts to take one from the bier, but is prevented by the father, whose dislike for Napoleon has now become the deepest hate.

When informed of this state of affairs, Napoleon determines to pay his respects to the dead soldier, and accompanied by his staff, enters the chamber. At first, the father is aghast, and as Napoleon stoops over the fallen boy, the father attempts to kill Napoleon.

His staff start to defend him, but the great general seizes this dramatic instant to put by the swords of his staff, and to show the father that he is decorating his son with the iron cross, the greatest of French honors.

This honor to the son he loved so dearly makes of the father a supporter of Napoleon, and the picture closes with the father mourning over his dead, and Napoleon using the light of the candles of the dead to pen his message of victory.

Scene from the Edison Napoleon.

Throughout this film has been given great attention as to detail and photography. The vision is excellently depicted, as well as the battlefield itself; but photographically the film rises to its greatest excellence when Napoleon is dimly seen in the darkened room at the inn.

In presenting Napoleon the makers have secured a photographic likeness, as well as an actor who understood the spirit of his part. The main characters are supported by an able cast.

The unusual feature of this film is the number of dramatic situations that blend one into the other so well. The climax, perhaps, for the average will be when Napoleon pins on the boy the cross of honor; but to the thinking public the greatest effect will come where Napoleon utilizes the light of the candle, a candle made necessary by the death of a soldier who helped gain victory, to pen the news of that same victory.

In viewing this film, the quality that most impresses is sincerity. One instinctively knows that not

Another Scene from the Edison Napoleon.

only the actors, but the makers were imbued with the knowledge that here was a chance to make a masterpiece of motography. The complete reel, acting, photography, detail, and sincerity, all are a credit to the industry.

In a somewhat similar vein is the Napoleon subject to be released by George Kleine on February 11. It comes from the house of Gaumont, and is entitled, "Napoleon in 1814." In this film, as in the Edison film, Napoleon's peculiar power of changing an enemy into a friend is made a leading dramatic feature. It is also a war drama, very realistic in its visual features.

The opening scene is laid at the Lapiere homestead in the little village of Tonnere, France. Pere Lapiere, the surviving son of a war victim and the only support of his mother, is drafted into the army of the French, and we witness the sad leave-taking of Pere from his heart-broken mother for the recruiting camp of Napoleon.

In the battle of Fere Champenoise, we encounter Pere wounded and unable to accompany his comrades in their retreat before the advancing German forces.

Napoleon, on his forced marches to aid Generals Mortier and Marmont in the defense of Paris, passes through Tonnere and takes possession of the Lapiere home for a much needed rest. This offers Mme. Lapiere the opportunity she seeks to avenge herself upon the man she believes responsible for the death of her son, one of whose comrades has previously advised her of the fate met by him. Taking a large knife, she is about to attack the sleeping Emperor but fortunately is intercepted by the awakened guard and hastily overpowered. The commotion rouses Napoleon and when he realizes the woman was about to attack him, he orders her liberated and confronting her bids her to step forward and execute the deed she contemplated.

The woman's passion roused, her thirst for revenge unsatisfied, she rushes forward with upraised arm, the gleaming steel-blade in her hand, to strike the fatal blow, but the majesty of Napoleon, his strength of character, his look of compassion and sympathy drives conviction to her very soul that she is wrong. A moment of hesitancy follows, the knife falls to the floor, the arm drops limp to her side and she shamefacedly bows and on her bended knees implores his majesty's pardon.

At this juncture Pere, whose wounds do not prove fatal and who has slowly picked his way home, enters the room. He can see his mother only and the two fall into each others arms entirely oblivious of their surrounding. When Pere realizes that he is in the presence of the Emporer, he salutes and is at once attention, in the parlance of the military. Ordered to step forward, he receives admonishment for having returned home without leave of absence, but Napoleon viewing with compassion the mother and son orders Pere Lapiere honorably discharged.

Reverting to the interests of his country, which after all encompass the individual welfare of every one of his fellow countrymen, Napoleon dismisses the unfortunate experience of the night as being prompted by the sufferings of mind tormented and perverted by anguish of the soul and draws the curtain upon mother and son, happy with one another in the enjoyment of a favorable turn of fate.

The piece is produced in Gaumont's eminent style, and a comparison of two such pretentious productions. one from a leading American maker and the other from a leading French maker, will be of great interest.

"The Golden Sickle"

The frontispiece in this number is taken from "The Golden Sickle," an Urban Eclipse subject to be released soon by George Kleine. It is a story of Druidism. The opening scene shows the meeting of Velleda, the Druid priestess, and Ito the hunter. The handsome young barbarian falls in love with the beautiful maiden, and she, forgetting all her vows, is not loth to listen to his passionate words. But the priests spy upon the lovers' meetings, and, jealous for the dignity of the gods they serve, seize the two transgressors and bring them to the Druidic temple. The oracles are consulted and prove unfavorable to Ito, who is adjudged guilty of sacrilege. Death is the penalty. Velleda resolves to save her lover. She tests upon a slave—whose love makes her willing to help—the efficacy of a narcotic which gives the appearance of death. The potion is effectual, and the antidote brings the slave girl back to consciousness. At night the two women creep to the place where Ito is bound. A few whispered words of explanation and he takes the potion. In the morning his guards find him apparently dead, and imagining that the gods themselves have executed vengeance, the soldiers fling the body outside the camp. Here Velleda comes and, administering the antidote, has the joy of seeing her lover come back to life.

For his sake she casts away the symbols of her faith, and seeks safety in flight.

Newark Reforms M. P. Shows

Increased vigilance for safety, health and morality is to be enforced in the moving picture shows of Newark, N. J., if present plans prevail. Exits in some cases may be widened, standard lanterns substituted for small ones and eventually, perhaps, suction fans provided to exhaust the rooms of foul air. More heed is to be paid to height of ceilings, violations of rules on expectoration, prevention of crowding and control of behavior.

In a few days a framed poster of rules will be tacked up in each moving picture theater. By means of the information they will impart it is hoped infractions may be more quickly detected, if not prevented. The preparation of the rules is in the hands of the city building department and the bureau of combustibles and fire risks.

Oklahoma Ladies Run M. P. Show

The Princess Theater of Okmulgee, Okla., has been secured by the ladies of the Civic League of that city and will be operated in the future under their auspices.

R. M. Meginity, former owner of the Princess, will act as manager for the Civic League and has the following explanatory letter to the public regarding the change:

"I take this method of notifying the public that I have turned over the Princess Theater to the ladies of the Civic League who will operate it in the future, and, while I will act as manager, every cent will be turned over to the league. I desire to thank the public of Okmulgee for the liberal patronage given the Princess in the past and trust that they will give it even better patronage, as every dime spent will be for a good cause.

New Amusement Patents

By David S. Hulfish

It will be the purpose of this department to list all United States patents, as they are issued, which pertain to any form of amusement business, giving such data in each case as will enable the reader to judge whether he wishes to see the complete darwings and specifications of th patent. When patents of special interest to The Nickelodeon readers are encountered, the descriptive matter herein will be amplified accordingly. A complete copy of drawings, specifications and claims of any patent listed will be furnished from this office upon receipt of ten cents.

PATENT No. 970,570. Motion picture film reel mechanism. Walter B. Swindell, Raleigh, N. C. An "automatic rewind" device for projecting machines. In the general description of the invention, the patent says:

This invention has reference to motion picture film reel mechanisms and is designed to provide a mechanism for supporting motion picture films while in use, whereby a film after passing in front of the projection lens is rewound in a fire proof case, the rewinding being automatic and progressing as the film is unwound from the initial reel, the structure being such that the receiving reel and casing therefor may be interchanged with the reel from which the film is unwound as it passes through the projection apparatus, the parts then being in position to repeat the operation without further delay.

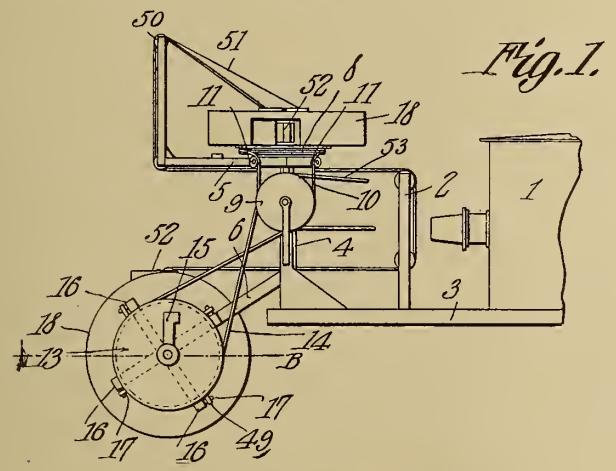

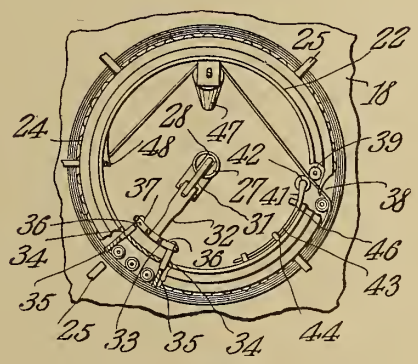

970,570.

In accordance with the present invention two identical reel structures are provided, and each structure is adapted to deliver the films from the inside of the film roll and to receive the film for rewinding in such manner that the incoming film shall always be received on the outside of the increasing film roll. When the entire film has passed from one reel to the other then the reels are interchanged and the film may be immediately repassed through the projection apparatus without the necessity of rewinding the film since, when wound upon the receiving reel, with the present apparatus, the wound film is ready to be withdrawn therefrom for passage through the projection apparatus in the proper order. Furthermore the wound-up film as it comes from the projection apparatus need not be exposed or removed from the receiving casing since the latter as a whole is interchanged in position with the casing from which the film was unwound to pass through the projection apparatus, the structure being such that when the film is unwound to proceed to the projection apparatus the casing is rotated while when the film is wound up after having passed the projection apparatus a receiving reel with its casing is rotated.

The patent has ten figures of drawings, of which two figures are reproduced to accompany this review. These are Fig. 1 and Fig. 4. In these drawings, *1* is the lamphouse, mounted upon the table top *3*. The motion head is not shown at all in the figures, unless it may be taken as represented by the frame *2*, the two rollers of which may be thought of as the upper and lower steady feed sprockets, the intermittent feed, film gate, etc., being normally located between them. but being omitted from this drawing as not being integral parts of the invention, since this invention may be employed with any type of motion head whatsoever.

At the front end of the base *3* are erected suitable supports *4* carrying brackets *5* and *6*. On top of the supports *4* there is erected a stationary stud for supporting the upper film magazine *18*; the pulley *8* revolves about this stud. Mounted on one side of the support *4* is another pulley *9* from which there extends a belt *10* to the pulley *8*, guide rollers *11* being utilized to direct the belt.

Carried by the brackets *6* is a spindle for the take-up reel, mounted in journals, and carrying the pulley *13*, receiving power from the pulley *9* through the belt *14*. The connection between the spindle and the pulley is a friction clutch, as is usual for take-up mechanism.

The film magazines are two cylindrical casings, *18*, both the same in construction. The central portion of each is open, and just within the central wall is arranged a circle of rollers, as may be seen in Fig. 4 accompanying this review. Each magazine has an outer film outlet, at *52*, as will be seen in the feed reel and at the top of the take-up reel in Fig. 1. Also there is an inner film outlet, at *38*, as may be seen in Fig. 4. Without going into details of construction, the operation is this:

The film is reeled up with the head or leader inside, taking the leader inward through the film outlet *52* of the take-up magazine, and through it and again out of the magazine through the central film outlet *38*, and the end is clamped in the latch *48*, all as shown in Fig. 4. Then the entire central or hub portion of the magazine is revolved, winding the film upon it until the tail end of the film is wound into the magazine.

This full magazine then is placed in the feed position, and the leader is taken from the central opening upward at *51* in Fig. 1, over the roller *50*, through the motion head, which would be located at *2*, and into the empty take-up reel on the brackets *6*, where it is taken as before, first through the outer film outlet *52* at the top of the take-up magazine and then through the magazine to the open hub at the center. Now, when the film is wound through the motion head, the

outer part, or case, of the feed magazine revolves and feeds the film to the center outlet, whence it passes up and then down to the motion head, while the *inner* part or hub of the take-up reel revolves and winds up the film, drawing it in through the film outlet *52*.

When the film has been wound through the motion head, the film is not even removed from the magazines, but the full magazine is placed in the feed position and the empty one in the take-up position and projection is made again.

There are nine claims. Of the claims, the three following are typical and are descriptive of the invention:

1. In a motion picture machine, a film receptacle comprising a casing, and a drum interior to and concentic with the casing, both the drum and the casing being provided with film passages and automatic traps therefor in the walls concentric with the axis of rotation, and the drum and casing being capable of rotation independent one of the other.

3. In a motion picture machine, a film receptacle comprising a casing, a film receiving drum interior to and concentric therewith, and film expanding members movable to increase the film receiving circumference of the drum.

6. In a motion picture machine, a film receptacle comprising a casing, a drum interior to and concentric with the casing and having a film passage there through, a holder or clamp for one end of the film interior to the drum, and an automatic trap for the passage.

Patent No. 970,768. Ticket printing machine. Thomas M. Vaughan, Detroit, Mich., assignor to Box Office Ticket Printing Machine Co., a corporation of Illinois.

The illustration accompanying is very nearly self-

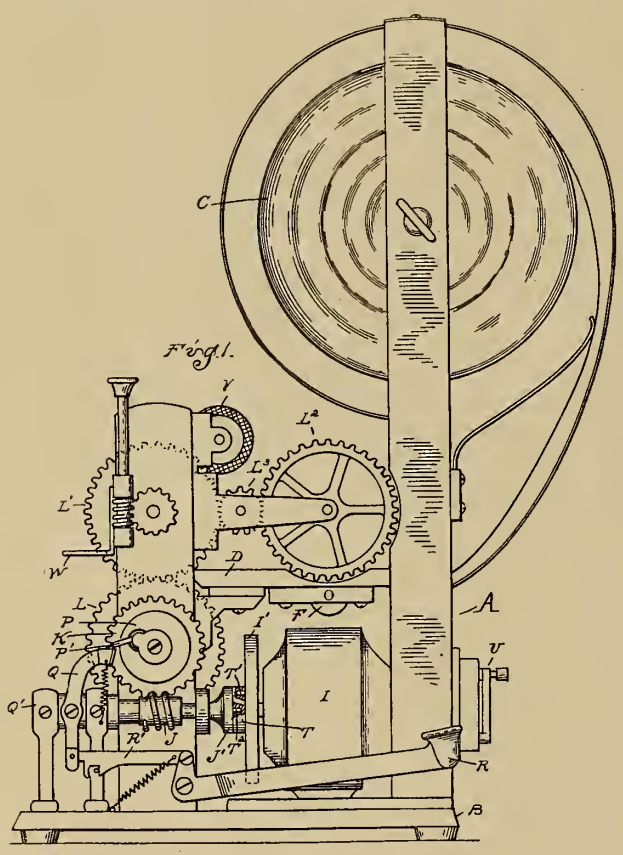

970,768

explanatory. The lever *R*, at the right near the base of the machine, is the operating control, the motor *I* near the lever *R* being an electric motor to drive the printing machine. A tape *C* of ticket paper runs between printing wheels and then under a knife. If the lever *R* is depressed momentarily, the motor *I* will drive the printing device just one revolution to print and cut off one ticket. By holding the lever *R* down, as many tickets as are desired may be obtained. A counting device keeps accurate tally of the number of tickets printed.

The machine should be placed in a prominent place in the ticket booth of the motion picture theater, and made an advertising feature of the theater.

An Interesting Trip

The vast extent of the motion picture field is little realized by the average person, but a trip of one of the demonstrators of the Motiograph will perhaps illustrate, better than anything else, the enormous spread of the photoplay house and its consequent hold upon the public.

E. A. Schultz left Chicago some three months ago for Toronto, Canada, and after spending a few days there visited Ottawa, Montreal and Quebec in Quebec province; Winnipeg, Selkirk and Brandon in Manitoba; Prince Albert in Saskatchewan; Calgary and Edmonton in Alberta, and Revelstoke, Vancouver, and Victoria in Vancouver.

After traversing this vast territory, Mr. Schultz visited many of the cities of Washington, Oregon, California, Nevada and Utah, and is now on his way to Denver, gradually working his way across the southern part of America to Savannah, Ga., after which he will journey back in a somewhat northeasterly direction until he again reaches Chicago.

The Enterprise Optical Manufacturing Company, maker of the Motiograph, also has demonstrators in other parts of America, now employing five thoroughly qualified operators for the sole purpose of demonstrating the Motiograph. Messrs. Swett and Clark, with headquarters in Boston, are now covering the New England states; H. L. Garber the Central states, now working in Buffalo, and S. E. Neukom working in and about Chicago. In addition, this company has its permanent representative in Europe in the person of J. Frank Brockliss, who has placed hundreds of Motiographs in England, France, and the colonies.

Needless to say, results are more than satisfactory, this being evidenced by the wonderful increase in sales of this excellent projection machine.

Educators Use Pictures

Experts from the A. & M. college at Stillwater, Okla., are now traveling about that state in a special train offering agricultural lectures and exhibitions in the interest of the farmers of the state. Part of the equipment consists of a projection machine for motion pictures and lantern slides, to be used in illustrating the lectures. Two of the motion picture subjects carried are "The Fly Pest" and "The Man Who Learned," those two classics of motion picture instruction. These illustrated lectures are given in one of the coaches of the train, which has been fitted up for lecture purposes. The train is run free of cost by the railroads of the state. The railroads and the A. & M. college hope that this train will bring about better methods of farming, thus enriching the farmer and the merchant, increasing the tonnage hauled by the roads, and extending the usefulness of the college.

Some Questions Answered

By William T. Braun

SIZE OF SCREEN.

What is the best size screen for a house about thirteen feet high? Theater is 75 feet deep. What size projection lens is required?—J. M.

WITH a thirteen-foot ceiling your picture ought not to be over nine feet high. The screen should be put well up toward the ceiling. This will allow you about four feet from the screen to the floor. If the first row of seats is not too near the screen and the floor properly sloped the whole picture can be distinctly seen all over the house.

If your house is 75 feet over all, the throw will probably be about 70 feet. With this throw, and a picture 8 feet 7 inches by 11 feet 9 inches, a lens of 5½-inch focus would be used for projecting the moving picture film. A stereopticon picture to match the above motion picture should be 9 feet 4 inches high by 10 feet 3 inches wide, requiring a projection lens of 20-inch focus.

The figures in a picture of the above size are about life size. This is generally conceded to be the best size. In The Nickelodeon of January 21, formulas were given to find the focal length for any throw or size picture.

ADJUSTING REVOLVING SHUTTER AND FRAME-UP MECHANISM.

How is the shutter set on an Improved Exhibition Model Edison machine, one-pin movement? Also, I am having trouble with the frame-up mechanism. The framing carriage falls slowly, so that the picture has to be framed up continually. The rack and pinion that are attached to the frame-up lever and spindle mesh tightly together, so I do not see what causes the trouble.—G. W. H.

IN setting the shutter on any machine the purpose of the shutter and the results which you are after must be kept in mind. The purpose of the revolving shutter is to keep the light from entering the projection lens when the film is in motion. The shutter consists of two blades, one of which is to cover the aperture during the travel of the film across the aperture, and the other to help eliminate the flicker. It can be reasoned out that if the shutter had but one blade, the shadow of it across the screen as it closes off the light would be more noticeable than if two blades or wings were used. When a double blade shutter is employed the periods of covering up the aperture are not so far apart and therefore not as noticeable on the screen.

Also the faster the shutter is revolved the less noticeable the flicker. The principle can be seen in watching an electric fan when it commences to revolve. If it had but two blades instead of four the blades would be more discernable. When the fan revolves nothing but the whir of the blades can be seen.

In setting the shutter it is better to have its action a little late than too early. By this I mean that the shutter need not cover the entire aperture until after the film has started to move. The best way is to set it so that the aperture is entirely covered by the shutter just before the film stops moving.

All that is necessary to adjust the shutter on the exhibition model, is to loosen the two screws on the hub of the shutter body so it is free to revolve on the shaft. Set the framing lever in the middle of its travel, then turn the flywheel around slowly until the pin starts to enter the slot of the starwheel. The shutter blade should then just begin to cover the aperture. Just as the pin is about to leave the slot of the starwheel the shutter should cover the aperture. Now tighten the screws on the hub and thread up the machine.

It may be possible that the shutter works a little bit too early or late. This can best be judged by running a film through the machine and adjusting the shutter to suit.

In regard to your trouble with the framing carriage, the sliding down of the body of the machine on its bed is not the fault of the rack and pinion. The whole trouble is most likely that there is too much play between the machine body and the bed on which it slides when framing up.

To remedy this remove the machine and guides from the case and tighten the screws which hold them together. Do not make them too tight or you will not be able to move the frame-up lever. Replace the machine in the cover and I am sure the weight or vibration of the machine will not make the body drop as before.

SPROCKET HOLES SHOWING ON SCREEN.

Can you tell me what is the trouble when the sprocket holes of the film show occasionally on the screen? Also parts of the picture, particularly the center, seem blurred, and not as sharp and distinct as the rest of the picture.—H. H. L.

IF the sprocket holes show on the screen the fault can be traced to one of three sources. The trouble may be with the camera that took the original picture, with the printing machine that made the positive, or with your projecting machine. During my experience as operator I have run across one or two films with the above trouble caused by the printing machine which made the positive. Your trouble comes from some other source, as only once in a great while we run across a film which is poorly printed.

More likely the trouble is with your machine. Get a small steel ruler or any flat, narrow, straight piece of steel. Try it on another straight surface first, to see that it is absolutely true. Now, place this steel on the top feed and intermittent sprockets to see if they line up with the aperture. Also test the idlers or film guide rollers on the gate to see if they line up properly with the aperture. If the sprockets or rollers do not line up with the aperture, the sprocket holes of the film are liable to show on the aperture when the film is brought down and will be projected on the screen.

If your tension springs do not bear flat on the film but push it over a little the holes will show through the aperture. The trouble is very seldom with the tension springs, the sprockets almost always causing the trouble.

In regard to part of the picture being blurred. The fault may be with the same tension springs mentioned above, or may come from bad projection lenses. First get your picture in as perfect a focus as possible, then try adjusting the tension springs. On almost all machines these can be adjusted by screws on the front

of the gate. If these springs hold the film flat on the aperture plate and your picture is still blurred in the center the fault is with the projection lens. Borrow a lens from a neighboring theater and test it with some of the film that shows indistinct with your lens; then you will soon be able to tell where the fault lies. I think more than likely the trouble is with the lens.

Nothing New in Special Screens

There is nothing new under the sun; and to this rule no exception is found in the tendency today to hunt for some sort of projection screen that will be an improvement over the white muslin sheet or plaster wall. The search has gone on ever since magic lanterns were invented—and evidently it has never been entirely successful, or inventors would not still be giving their time to the problem.

We do not mean to state that the special screens and screen preparations now on the market have no merit. They have. Indeed, some of them reflect a remarkably better picture than the plain screen. But that the idea itself is old is shown by the following article entitled, "Metallic Lantern Screens," by W. H. Harrison, which appeared in the *Magic Lantern Journal* away back in the early part of 1893:

One portion of the recent invention by Mr. Anderton in relation to lantern steroscopic projection may have the effect of drawing more attention to the subject of screens. The photographic society might have done well to settle certain points while it had the silver-faced screen in use, for brilliancy of image is one thing, perfection of color is another.

Should the image have too metallic a luster to be altogether pleasing, the invention may yet lead to improvement of the ordinary images should a screen with semi-metallic luster be found to increase the light, without deteriorating the color of the picture. By semi-metallic we mean a luster something like that of artificial pearls, which consist of large hollow glass beads coated inside with fish scales ground up in a suitable medium with which medium a screen might be painted.

The great founder of photography, Nicephore Niepce, lived near the little town of Chalons on the Saone, one of the best of the Continental seats of the industry of making artificial pearls, which pearls were invented by a Frenchman of the name of Jaquin. The scales of the bleak—a little fish common in the Thames, the Rhine, the Saone, and in most rivers of Europe—are thrown into a solution of ammonia, which helps to preserve them on the one hand and gives them a degree of softness and flexibility on the other. The liquor employed to make artificial pearls is an article of commerce, known as *Essence d'Orient* or oriental essence. The chief of the few seats of the artificial pearl industry are in France, but there are a limited number elsewhere. The products differ in quality.

Before quitting this fishy subject, some lantern effects may be noticed which were produced some years ago at an exhibition of articles of luxury in Nice, during the English season there. One of the rooms connected with the exhibition was normally kept in darkness, but its walls formed an aquarium, behind the glass sides of which were numerous fish with silvery scales, common in the Mediterraneon. Out of sight, above the tanks, were electric lanterns, casting their beams upon the silvery sides of the fish, so that the room was chiefly illuminated by means of these living mirrors, moving restlessly to and fro, and casting flashing beams of light among the spectators. It was a pretty fantasy, eminently French in its conception and execution.

In making artificial pearls, sometimes the lustrous matter is suspended in gum, and the outside of the little glass globe containing it is deadened with hydrofluoric acid.

An opening seems to exist for experiments to determine the best surface for a lantern screen between that of dead white and metallic luster.

Supposing dead metallic screens to be advantageous for ordinary purposes, the Germans have been clever in making "silver paper" of tin, which is economical. This paper is used for wrapping tea and edible articles, consequently, under the German law, it must not contain more than 1 per cent of lead. The full details of the manufacture of this paper had been kept somewhat a trade secret, until Herr A. Harpf gave the particulars in a German periodical; an abstract of his statements appeared recently in the *Proceedings of the Institute of Civil Engineers*. Herr Harpf was for some time in charge of a manufactory of the "argentine," as the tin deposit is called.

The manufacturers start with a solution of tin in hydrochloric acid, and get the metal from waste tin materials, such as bearing-metal turnings from railway repairing shops. For lantern screens it would be cheap enough to start with already purified stannous chloride, which should be placed in vats in which plates of zinc are suspended, when, if all conditions are right, the tin precipitates as a gray spongy mass, and hydrogen is evolved. The spongy mass is dried, and rubbed through a sieve to a fine dust. The author says that two methods are employed of coating paper therewith: "In the first, 4 kilos of wax, and three-quarters of a kilo of potash are boiled with 50 kilos of water, and the melting fluid so produced is stiffened to a thick paste by stirring the tin precipitate into it. In the second, 75 liters of freshly made 4 per cent starch solution are mixed with 750 grammes of a wax solution, prepared from 5 lb. of wax and 1½ lb. of potash dissolved in hot water, and 25 kilos of argentine are added. The paste so obtained is printed by rolls on to paper, which dries to a dull gray tone, but becomes bright when burnished by passing between hot calendar rollers, when it exactly resemble tin foil." What is wanted for Mr. Anderson's lantern screens is a state of brightness midway between the two extremes just mentioned.

Real silver paper is sometimes made by covering white paper with a priming of white lead and size, and cementing silver leaf thereupon.

The powdered aluminum of different degrees of fineness now obtainable in the market seems to be about the best substance for use in experimenting in the direction now under notice, especially as it is not attacked by sulphur in the air. Used pure, it perhaps gives as high a metallic luster as will ever be required, and its luster may conveniently be reduced, if necessary, by admixture with a suitable white substance, preferably sulphate of barium, which is practically unchangeable. The powders can be applied as a paint in any suitable vehicle, such, for instance, as size. The Lantern Society might do useful work in experimentally investigating the merits of different semi metallic screens.

Doc Cook in Moving Pictures

Dr. Frederick A. Cook, the Arctic explorer, who recently signed a contract to pose for the Solax Moving Picture Company, has brought to Flushing, N. J., a lot of the equipment used in his Arctic expedition. Among the articles are sleds, a fur suit, boots, mitts, cooking outfit, several harpoons, a number of dogs and some snowshoes.

The picture will be taken at the plant of the Gaumont company in Leavitt avenue, Flushing.

The object of the pictures is said to be to give the public an opportunity to witness an accurate pictorial representation of polar exploration and to give Dr. Cook an opportunity to present his case to the American people who could not be reached by any other method.

The Meredith-Jones Camera

In an article entitled "Two Independent Cameras," which appeared in The Nickelodeon for January 28, the camera invented by Mr. Hubert Meredith-Jones was referred to as the "Mapes-Jones" camera. This title was wrong. Mr. Meredith-Jones is the sole inventor of the camera. Mr. Charles M. Mapes was merely assigned one-half of the patent, and claims no part in the invention itself, all credit for which should go to Mr. Jones.

Recent Films Reviewed

Three Sisters.—Biograph. There is much good acting in this film and the story is an effective one. The acting of the sisters is consistently good throughout, especially the two most concerned. They were sharp, clean-cut characterizations of two widely different types of girl. The young sport was good in the same way. The introduction of the minister was without rhyme or reason. It weakened an otherwise very good photoplay. His arrival at the end, Johnny-on-the-spot, was silly in its opportunism. The humor in this final scene was good, but the serious implications were idiotic.

Disinherited.—Eclipse. Another plot of the "old familiar" variety from Eclipse. The exceptionally distinguished acting gives it sufficient excuse for being, however; the manner proving novel if not the matter. It is such acting as for sheer perfection of technique is seen only now and then, most often in French films, and then generally those of the Kosmik brand. Our American actors may please us better and get closer to our hearts, but they lack the stage presence and technical proficiency disclosed by the better class of French photoplayers. As these latter are often picked from the foremost "legitimate" ranks, the reason for their technical superiority is not far to seek. Every member of the cast of this Eclipse photoplay is evidently a person of some histrionic importance in France, as the *dramatis personae* that prefaces the drama would seem to indicate, and as their highly efficient performance proves. Too bad Eclipse did not set them a worthier task than this old faded rag of a drama. Why Eclipse with all its ability and ambition and high artistic enterprise is content to turn out these dramas stuffed with mothballs and musty sentiment, is a matter that passeth comprehension. The fault possibly lies with their manager of production (whoever he may be) who was trained perfectly in an old, old school.

The Try-Out.—Edison. This reel shows evidences of unconscionable padding. The action is slower than a dead march. The play is a heavy mixture of sentiment and farce, with just a few bright spots. A new face was seen among the actors—a face not new to the motion picture world but new to the Edison films. She is an actress who long since demonstrated her worth and will prove a popular acquisition to the Edison forces. With such a generous supply of leading ladies it looks as if Edison had need of at least one leading man. Edison has several male actors of sterling ability, but none with quite the characteristics that go to make a matinee idol.

Bumptious as Romeo.—Edison. A good legitimate burlesque of amateur theatricals carried out with amusing results. Bumptious carries the whole burden of the performance. He exerts himself strenuously and is funny most of the time. The final scene was expressive, but the demolition of Shakespeare's bust jarred a little. Smashing Shakespeare to create fun in a photoplay is an untoward bit of symbolism. The best scene of all was the rehearsal scene. This recalls the rehearsal scene in "The Try-Out" and shines by comparison. The release of these two comedies so similar in subject on consecutive days seems like a matter of questionable taste. It would doubtless have been better policy to launch them a week or two apart. For instance, the *Orpheum,* Chicago's leading motion picture theater, which gives all Edison releases a first run and generally features them, suffered to some extent from a similarity of programs on the two succeeding days.

The Jilted Joker.—Essanay. A farce comedy that will serve to fill out a program. The action is intelligible and fairly amusing. The settings are notable for their elaborate realism.

Hank and Lank—They Make a Mash.—Essanay. Just as we had begun to hope—but we won't say it. They're back, and we might as well make the best of it. They're up to the same old stunts in the same old way. The wind-up is funny and the rest *as* good as usual.

A Robust Patient.—Selig. This subjects purports to be comedy and works hard to be such, but the harvest of laughs is a meager one. The piece is scarcely worth fifteen minutes' contemplation. Compressed to four-hundred feet it might afford amusement as a quick-action comic, but the thousand-foot pace has a steam-roller effect. One detail deserves commendation: in the restaurant scene the actor got away with a vast amount of food without any of the disgusting manners that photoplay comedians often bring to bear on such occasions. We expected to see it come here, but did not and are duly thankful.

The Border Ranger.—Essanay. A Western melodrama constructed from old familiar elements, interesting enough but scarcely thrilling, even though the villains are getting ready to torture the hero with a red-hot poker. A squad of horsemen is seen galloping over the plains and everybody knows they will get there in time to save him. This squad of horsemen has become so familiar in Western dramas, particularly in Essanay Western dramas, that the instant they appear all suspense is at an end because they were never known to fail. Some terribly original producer will let them come too late some time; but such daredevil iconoclasm need never be feared from Essanay who will uphold the orthodox traditions as long as they hold the ghost of a thrill. Essanay fathered most of the Western traditions and will doubtless be loyal to the end.

The District Attorney.—Powers. An interesting example of plot construction. Daughter is in the parlor entertaining fellows; father is in the library, entertaining an anarchist. Or rather, the anarchist is entertaining Father, for he has an infernal machine that is about to go off and he won't let Father escape except under certain conditions to which Father will not submit. The scene shifts from one room to the other, and we see Daughter making merry while Father sweats blood; a sharp contrast between comedy and melodrama that is highly effective. It is such a contrast as could scarcely be presented on the legitimate stage, owing to the frequent alternations of scene which are necessary to carry the impression of synchronous events. The piece is well presented and quite well acted, though the suitors are a trifle silly, and the dramatic effect is exceptionally keen and lively.

Tip to Husbands.—Powers. An amusing comedy of some originality, plenty good enough to fill out a reel. We like the "distant" photography for a change. It relieves the monotony of the "close-up" style, and has the positive advantage of adding breadth to the pictures.

Escape From the Tuileries.—Pathe. One of those films *de luxe* which the French makers turn out now and then, causing the rest of the world to gasp in admiration, and wonder how they do it. This one is an historical drama, laid in Paris during the time of the French Revolution. The storm and stress of the period are vividly depicted, and the costumes and settings and general historical perspective are of the highest beauty and excellence. Above all it is a drama, holding interest every inch of the way. It is often a fault of large historical productions that the drama gets lost among the scenery and the interest droops to a level of mere awe at the stage spectacle. But not so here. It is a drama that would hold the liveliest attention in no matter what surroundings. The acting is all that could be desired; there are many characters concerned and every part is taken well. It is to be wondered that Pathe Freres did not feature this release more extensively. As a drama and historical production it is superior to "Il Trovatore" in almost every respect; to find its peer one must search back as far as Gaumont's "Life of Moliere."

The Red Man's Curse.—Selig. Here's a film that tells us the Indian's curse is education and rum. The Indian hero comes to a very bad end and the moral tag is appended by two of the sheriff's posse who hold up a scholarship prize and a bottle of rum and wag their heads knowingly as if to say—These did it. Now, everybody is willing to admit that rum is a curse to red man or white, to any man, in fact. But to include education along with it is quite a different matter. We are no more disposed to admit that education is the red man's curse, than it is the white man's. We are more inclined to believe that education is the red man's salvation, and shall hold to the belief until Selig can present more convincing evidence than is contained in this film. Obivously the Indian here concerned rode to ruin on the back of rum; we can't see how education had much of anything to do with it. In fact, the one proud and memorable occasion

of his life was the moment when he received a badge for his educational attainments. To prove that crime and an ignominious death resulted from this moment would require long and devious arguments,—an argument the film does not supply. But our quarrel with the moral of the film does not extend to its visual presentment. It is an admirable production containing many fine scenes both pictorial and dramatic. The leading character is enacted in able style. For some reason or other this actor seems to be especially good in man-hunts. His work in "The Foreman," "The Spy," and now in "The Red Man's Curse," is well remembered for that particular trait. He knows how to project the anxious glances and panting despair of the hunted quarry. The film is especially commendable for its attempt to deal rationally and truthfully with Indian life. It is one of the few attempts on record. We have plenty of Indian subjects, but few truthful ones.

The Marked Dollar.—Pathe. This story with its moral tag and good little girl who pleaded with the bad lady and saved papa from prison seems to have been taken from a Sunday-school book and placed in a Western setting. In more than one respect it verges on the childish. A commendable feature of the film is the sure-enough Western scenery.

Father Makes Himself Useful.—Lubin. A bright attractive photoplay to be performed in the polite comedy style, which it was in the main, but in several instances it wasn't. Reference is made to the under-the-table episode and to the later scene where the tormented husband snarls his brow and clenches his fist and takes on "something terrible." These are violations of all polite probability and afford striking examples of Lubin's besetting vice —the tendency to make things too broad. Lubin comedy is ever verging toward farce, and Lubin drama toward melodrama. This tendency is so persistent that it seems to bespeak a calculated policy, a consistent endeavor to render all dramatic action unmistakably clear and obvious even to the most unenlightened. It is possibly true that this was a wise policy in the good old days when picture shows were given in barns and store-rooms and audiences were new to the art; but such conditions prevail no longer; everything has progressed, and audiences are not as obtuse as the Lubin policy would imply. The Lubin company itself has progressed. Its progress has been one of the noticeable features of the last few months. The Lubin photography is as fine as any—truly "clear as a bell"; and the material features of recent productions have seemingly improved with every release. "Father Makes Himself Useful," with its scene after scene of rich, substantial interiors, is a case in point. But Lubin will never come into its own until it gives up its old vices. It must reform that tendency to broaden everything, to force dramatic situations, to hammer down points with a pile-driver. Along with its material improvement it must have a spiritual improvement. The most successful and prominent American film-makers have mapped their course of future progress along lines of refinement, dignity and restraint. The ideals of the photoplay are to be the same as those of the legitimate drama. Lubin has all the material facilities and live acting ability to win itself a leading place in the goodly company of progressive makers, but it is liable to hover around the tail of the procession unless it undergoes a change of heart.

The Transgressor.—Nestor. A good picture, holding strong interest. The story has a pleasing swing, with a touch of pathos to give it heart-stirring qualities. It is acted with rare fidelity and produced with careful attention to detail. Photographically, the picture is good, and this happy combination makes the reel a pleasing one.

A Wreath of Orange Blossoms.—Biograph. A type of drama that is much favored by the film makers. Somebody is on the verge of yielding to temptation when they catch sight of some object associated with better moments of their past life, which reacts morally on their wavering mental state and prompts them to resist the present temptation. It provides a good dramatic expedient, particularly adaptable to the requirements of the motion picture in that the moral reaction is rendered visual through the agency of the material object. It is such a good expedient that there is a tendency to over-use it; but it ought to be reserved for good plays—plays that are in other respects up to the same level—and not used conventionally and indiscriminately to tone up mediocre plots. This Biograph plot is a good one, with all the necessary elements of a strong, well-motivated drama. The more one thinks of it, the more one admires it. In fact, it comes out better in retrospect than it did in the actual performance. This can be accounted for, perhaps, by the fact that the young wife's luxury-loving motive was not very clearly brought out. There was a string of scenes in the middle that were intended to develop this feature but the action was vague and indefinite and the meaning only became clear in the light of later events. At the time it looked merely like a development of the old Triangle. A string of scenes like this without definite meaning is not often found in Biograph subjects, whose special strength is specific action. But the temptation scene comes out strong and clear and makes a tense climax whose elements of conflict are of the mental order, and, therefore, of the highest order. The final episode with its indications of a complete change of heart and courageous outlook toward the future, is effective also. The actress gave an excellent performance throughout. She is the possessor of a finished and competent method and has a charming personality. The others were good also. Before passing on let us ask the meaning of that setting that was framed in a curtain through which the villain passed and was seen to carry on a telephone conversation. That curtain frame is one of the queerest contraptions we have ever seen on the motion picture screen, and seemed senseless. It looked like some spinster's dream of the elegance and mystery of bachelor quarters.

Of Interest to the Trade

By L. F. Cook

New York Letter

Some opened wine, others opened the window, and the correspondent opened his mouth in amazement at the magnitude and elegance of the first ball held by the employees of the Sales Company. If all dances are as enjoyable as that one, we want to go to at least one a week.

About 10:30 P. M., that part of New York around the corner of 125th street and 7th avenue began to realize that something unusual was afoot, and wondered what could cause such a multitude of $5,000 limousine cars to unload their precious freight in front of the Alhambra Hall. Not one or two cars, but flocks of them, if that is the right term for a number of autos, blocked the wide avenue; but everyone was on their good behavior and the reserves were unnecessary.

Arriving in the hall itself, one was impressed by the decorations, which were merely an indication of the spirit with which all parties affiliated in any way with the Sales Company had taken hold to make this occasion a great success.

To attempt to give a detailed account of all that happened would be too great a task for our unworthy pen, and the natural limitations of a man's mind precludes the possibility of describing the costumes worn by the ladies. So we must ask permission to class them in a group, and say that they were all there, adding a most pleasing effect to the *ensemble*—whatever that is.

Entertainment was furnished by the films of the various manufacturers, as well as by illustrated songs.

At 11:45, Mr. Brulatour, ably supported by Mr. Miles, led off the grand march, after which until an early breakfast hour the merriment was unconfined.

The various boxes bore the following banners: Lux, Great Northern, Thanhouser, Powers, Lumiere, Atlas, Reliance, Bison, Imp, Rex, Eclair, Nestor, Yankee, Champion, American, Solax and Nicholas Power. They were well occupied by the beauties of independent picturedom, accompanied by the manly heroes of many a hard fought legal battle.

Among those present were: C. V. Bauman, Bison and Reliance; Joe Engle, Rex; Carl Laemmle, Imp; I. C. Oes, Great Northern; J. G. Brulatour, president Sales Company, Lumiere; H. J. Streyckmans, Bison; R. Prieur, Lux; E. Offman, Eclair; H. M. Miles, secretary Sales Company, Atlas; David Horsley, Nestor; T. Evans, Powers; B. C. Cole, N. Power Company; Mark Dintenfass, Champion; P. A. Powers, Powers Company; G. A. Magie, Solax; Harry Raver, Yankee; H. Blache, Solax; C. Henkel, Yankee; E. F. Porter, Rex; B. Adler, Thanhouser; Joseph Koester, Steiner's Film Exchange.

The dance was made popular and successful by the following various committees and officers, to whom great credit should be given:

President Charles P. Fearing, Vice-President John V. Ward, Treasurer Joseph R. Miles, Secretary Edna G. Brown, Corresponding Secretary Florence E. Gribbon and Assistant Treasurer James T. Gilmartin.

Committee of arrangements, Charles Abrams and Herbert L. Taylor. Reception committee, Estelle Sutherland, Genevieve C. Ryan, J. Piver, J. Lewis, A. G. Whyte, M. Piver, J. Hoffmire, W. Moore and R. E. Burns.

* * *

Seldom does one encounter a trade in which the big men mingle so heartily with all persons connected with the industry.

A firm in which this spirit is exceptionally strong is the Vitagraph Company. The latest feature of this sort that has come to our attention is the Vitagraph Bowling Club. It is this spirit of comradeship that makes for good team work in business hours and we have no doubt that lots of success of the Vitagraph Company is due to just such occasions of relaxation.

An advance copy of the poster for the first Rex release, "A Heroine of '76," has been received, and it is a real poster in every sense of the word. Surrounded by a frame and surmounted by the Rex crown, it is a worthy companion to the first Rex release.

B. C. Coles, sales manager of N. Power Company, is on his regular trip in the interests of the firm, and it is expected that as a result the factory will soon begin to work overtime again.

Advance dope seems to indicate that of coming releases the Biograph, "Priscilla's Engagement Kiss," and Vitagraph, "The Deluge," are among the most interesting. The Biograph release is a comedy that secures its laughs from situations that arise in the plot, rather than by slap-stick methods, and as such is a welcome relief.

In "The Deluge," the Vitagraph people have attempted a story of Noah and his ark that is replete with wonderful possibilities. How well they have succeeded remains for the trade to decide. Being a fan on the subject of picture theater advertising, we cannot let this occasion pass without complimenting the Vitagraph Company on the press sheet it has recently issued. This sheet consists of reading notices for the theaters to insert in their local papers, and we advise all licensed exhibitors to send for one, and to use the ideas contained therein to the fullest possible extent.

Edison's New Economy Transformer

After a long series of experiments a transformer for alternating current has been produced by the Edison laboratories which would seem to have met the universal demand for a satisfactory current saving device that the exhibitor could purchase at a reasonable price. The Economy transformer is a new departure in instruments of its kind—a brand new design with absolutely new and distinctive features. The following description of its main features will give an idea of why the Edison people are justified in their claims for the new Economy:

GENERAL STRUCTURE.

By special arrangement and a careful proportionment of the primary and secondary coils, and of iron to copper, it has been possible to effect an economy in size and weight of the new model, which, of course, is justification enough in itself to warrant the designation of the apt name of "Economy" to it when the cramped space in the operator's booth is taken into consideration. It is exactly one-half the size and weighs just half as much as the company's previous model, the dimensions being as follows: Height over regulating lever, 10 inches; floor space, 10½ by 8½ inches; approximate weight, 40 pounds.

ADJUSTMENTS.

The Economy is fitted with a regulating device which is a radical departure. It is stepless in operation, contains neither contacts nor contact lever to burn and arc, as the degree of light is varied; it opens no circuit nor circuits, so that in regulating the current to the lamp by this device the lamp burns steadily, as the lamp operation is not interfered with other than that its voltage is increased or decreased slightly, depending upon the adjustment made. Some transformers have four positions, or steps, the former Edison model, for instance, having three; but the Economy being stepless, the adjustment is not confined to any predetermined number of positions, as the degree of change required is entirely at the will of the operator. He may turn the adjusting crank only a fraction of a revolution or he may make several complete revolutions of the adjusting crank, and each fraction of a revolution will change the adjustment corresponding to the movement made. The Economy will deliver 40 amperes and 45 volts at the arc; it cannot burn out even on a dead short circuit; nor will it break under five minutes. Once the instrument is installed and proper light obtained by adjusting the controller, no further adjustment is required, except at the arc. The temperature rise of the Economy is low and very little reactance is added to the circuit. It is so designed that, with the secondary on short circuit, the primary current will not rise to an excessively high value.

EFFICIENCY.

The Economy maintains the high efficiency of the former Edison model—in fact, although it was not expected that the efficiency performance would be bettered, it has developed from tests made that the new model really has a slightly higher efficiency. This, of course, reduces the operating cost still further and gives the transformer method a still greater advantage over the rheostatic resistance method.

FLEXIBILITY.

The Economy, on account of the special adjustment used, is found to be quite flexible in compensating for line drop, and but one extra lead is required at the

primary to insure good light at lower voltage. With this one extra lead, connection can be made so that good light will obtain readily, with line voltage as low as 100 volts or as high as 120. One tap is used for voltage from 100 volts to 110, the other tap from 110 to 120 volts.

OPERATION.

The Economy has been specially designed throughout to obtain suitable voltage and current values for operating moving picture arc lamps, and with suitable line connections a good white light can be thrown very rapidly upon the screen, and this in turn adjusted to suit film densities and distance between lamp and screen.

For convenience, leads are brought out through the casings through porcelain bushings, for the external connections. These leads are clearly marked "Line" and "Lamp" respectively, to avoid possible confusion in making connections.

A COMPARISON.

The following table gives a detailed comparison of the different methods in general use, and clearly demonstrates the superiority of the new Economy Transformer:

	Economy	Rheostat
Volts, line	110	110
Volts across arc	35	35
Amperes, line	15.5	40
Amperes, arc	40	40
Watts, lamp	1400	1400
Watts taken from line	1450	4400
Efficiency of methods, per cent	96	32
Volt-amperes saved by Economy transformer	2695	
Charge for energy per hour, at 10c per kilowatt hour	$ .145	$ .44
Comparative cost per year, 5-hour day	216.00	685.00

Vitagraph Shop Talk

John Bunny, one of the Vitagraph players, was surprised by a letter from a friend whom he has not seen or heard from in ten years. The friend was visiting Los Angeles, Cal., and saw Mr. Bunny in one of the Vitagraph life portrayals. In part the letter said: "I enjoyed your work very much. I can assure you that you are very popular with California audiences. Our moving picture places here are very elaborate and run like first class theaters. Come out some day and see your own face and take dinner with us."

A. E. Smith, sometimes designated as "Vitagraph Smith," received a most cordial welcome on his return from Europe. Everybody was glad to see him and he was just as glad to see them. Mr. Smith reports a most flourishing condition of trade in the European and foreign markets, and he is most happy to say Vitagraph life portrayals are booming and drawing people to the theaters as well as the orders to the Paris, London and Berlin branches of the Vitagraph Company.

Wednesday evening, January 24, at Farragut Hall, Brooklyn, N. Y., Henry and William Oetjen, proprietors, tendered Maurice Costello a "Vitagraph Night" reception, which was attended by three large audiences. They were enthusiastic in their welcome of the guest of honor, who was introduced by Mr. Spedon, as representative of the Vitagraph Company. Mr. Costello made some very happy remarks that were received in good part. After the reception the Messrs. Octjen entertained Mr. Costello and his friend with a beefsteak dinner, during which they presented him with a very handsome traveling bag, of which he expressed himself as heartily appreciative.

The boat employed in the second part of "A Tale of Two Cities," on which Dr. Manette, Lucy Darnay, and Mr. Lorry sail from Paris to London, is the "Half-Moon," used in the "Hudson-Fulton" celebration. It would never be recognized, but it is worth knowing and a very interesting fact.

A Champion War Drama

In presenting "The Old Man and Jim," the Champion Film Company has constructed a historical subject from the beautiful theme of James Whitcomb Riley's poem by the same name. This subject was chosen for its educational value, and because it afforded opportunity for a great display of military atmosphere.

The subject matter of the poem, and of the film, deals with the famous conflict at Petersburg, Va., in 1865, between Generals Grant and Lee. In producing

this film the Champion Company has really gone to great expense, and has produced a film of great interest and enthusiasm.

This battle was one of the most fiercely contested of the civil war, and in reproducing the battle scenes, the manufacturer went to a deal of trouble to present as accurately as possible a picture of this magnificent struggle. The whole film is made on a pretentious scale, being one of the most spectacular productions ever attempted by an independent manufacturer.

The manufacturers are backing up this film with attractive advertising matter, and are offering to send direct to those exhibitors who use the film special posters and advertising matter. To obtain these it is only necessary to write the company.

American vs. American

The American Film Exchange of Chicago recently sought to obtain a temporary injunction against the American Film Manufacturing Company of the same city, prohibiting the latter from using an incorporated name so similar to its own.

In a hearing held February 6 before Judge Cooper, in Chicago, motion for the temporary injunction was quashed, the judge refusing the complainant's request.

A Solax Announcement

George A. Magie, general manager of the Solax Company, announces that beginning Wednesday, March 8, his company will begin to release two films a week. This is a remarkable record for a firm that has been releasing for such a short time. It ordinarily takes at least nine months or a year for any film to build up a reputation good enough to warrant a second release. Coming so soon, the announcement is a compliment to the quality of Solax productions.

Some doubt as to the advisability of making the second release on Wednesday has been entertained, but it was finally decided to make the announcement, which will be adhered to unless some other day produces unlooked for popularity. This will make the Solax release days Wednesday and Friday.

Small Direct Current Belted Generators

In Bulletin No. 4812, just issued by the General Electric Company, are described small direct current generators ranging in capacity from 1¼ to 20 kilowats, and suitable for lighting small plants, hotels, residences, picture theaters, etc., where the average length of the feeder circuits is 400 yards or less, and the maximum length is not greater than three-quarters of a mile. The generators are provided with sliding bases which facilitate adjustment of the belt, and can be installed on the floor, wall, or ceiling. With the exception of the 1¼ kilowatts generators, all these are provided with commutating poles, so rendering a change in position of the brushes with change of load unnecessary. This bulletin contains table of ratings, weights and dimensions.

Synopses of Current Films

From the Manufacturers' Bulletins

Pathé

MAX HAS THE BOXING FEVER.

Our own Max attends a boxing bout and comes home very enthusiastic about the sport. On his way home he purchases a punching bag and attaching it to the chandelier proceeds to break up housekeeping. However, he finally becomes proficient, and one fine night when Max has looked too long upon the wine when it was red, he challenges his friend to a pugilistic encounter. His friend accepts, and there in the restaurant they put on the gloves, and for about 20 rounds belabor each other unmercifully. Great comedy stuff is introduced because the two men both wear roller skates during the entire stunt.—561 feet.

AN IMITATOR OF BLONDIN.

Our hero is anxious to emulate Blondin, and win a prize of $5,000 offered at the Montreal exhibition to any person who crosses the Niagara Falls on a tight-rope. He essays a practice on the kitchen broom, with disastrous results. His wife then drives him out of the house with scant ceremony. He next tries to perform an a bench in a park, on which are seated three irate old gentlemen. Suddenly he alights on them, and throws them violently to the ground. When they have picked themselves up they start off in pursuit of him. He gains fresh experience and victims in the shape of a man with a hose, some masons, and a number of laundry women. A cold bath in the river does not damp his enthusiasm and he climbs up a high building, and also endeavors to walk on a telegraph wire. He descends rather hastily into the midst of his angry victims, and for the next quarter of an hour has rather a bad time of it.—400 feet. Released February 6.

LEGALLY DEAD.

Arthur Stanley marries a girl who, though she loves another, yields to her father's wish. A year later Stanley is called away to the quarry which he owns and is buried beneath hundreds of tons of rock by a premature blast. His foreman sends a telegram to Mrs. Stanley, telling her of the tragic death, for he doesn't know that Stanley was protected by a great mass of rock, and that when he recovers consciousness he finds a way out to the opposite side of the mountain. The awful shock, however, has robbed him of his memory, and he doesn't know who he is. Rescued by kind-hearted folks he finally marries a lovely girl and lives happily until a snatch of music his present wife plays brings back all his past with a rush. He feels that he must go home, but when he arrives he finds his first wife married again, and his father-in-law getting a lawyer on the job, finds that Stanley has been absent over seven years and is legally dead, thus making his wife's marriage legal. He returns to his second wife and all live happily ever after.—1,000 feet. Released February 8.

THE MISSING BRIDE.

This intensely dramatic and beautiful picture enthrals the spectator from the moment it appears on the screen until the last figure has flashed off the silent stage. The tale opens with a marriage after which, as was the custom, the guests play games in and out of the ruins of the old castle. The bride, seeking some hiding place, wanders away alone and finally through a massive door which clicks shut behind her. She looks around her terrified and sees, clothed in garments like her own, a skeleton! She tries to escape but in vain. Calming herself she seeks the explanation of this mystery and finds it in an old book beside the skeleton; what the mystery is and how the bride escapes by the aid of a kitten is best told in the film itself. 800 feet.

REVIEW OF THE CHILEAN TROOPS.

An interesting military picture showing that Chili has a most effective army. 180 feet. Released February 10.

SILVER LEAF'S HEART.

Silver Leaf, a little Indian maid, is saved from a cruel beating at the hands of one of her tribesmen by Bob Stevens, a ranchman. Angered at his humiliation, the disgruntled Indian calls on his tribe to avenge his insult and in consequence the Stevens cavalcade is ambushed and Stevens' little daughter Annette is carried off while Stevens himself is badly stunned by a blow on the head. Cowboys ride hotly in pursuit of the Indians, but lose the trail, and Stevens, recovering consciousness, rides alone in search of his child. Finally he comes upon Silver Leaf, whom he questions. She tells him where his child is, but warns him not to go near the camp and that she woll bring him Annette that night. He consents to wait and later Silver Leaf appears with the little girl. She cannot return again to her people, however, so the horse has to carry three up in the mad ride to outdistance the now pursuing savages. A good fight and a thrilling rescue supplies a fitting climax to this western film. 1,000 feet. Released February 11.

Solax

CORINNE IN DOLLYLAND.

Little Corinne, sitting quietly by her grandmother's side, suddenly decides that she would like to go to the moving picture theater. After a good deal of coaxing the grandmother give her the wherewithal with which to gratify her desire. She takes the money and sets gaily off for the theater. Upon her arrival at the theater the gateman seeing such a little tot unaccompanied, refuses to let her enter the place. Little Corinne pleads with the gateman, but he proves to be adamant, and we next see her with drooping head and tear stained face wending her way slowly homeward—intense dejection being evidenced in her every movement. On her way home she comes upon a little newsboy crying bitterly. Upon her asking him the cause of his tears, he tells her that a crowd of street urchins have stolen his papers and money. Unselfish little Corinne, although herself being unable to attend the show, generously gives the little boy her bright, new coin and directs him to the theater, thereby hoping to help him forget his unhappy plight. Corinne then continues on her way, and upon her arrival home tells her grandmother of all that has happened. Grandmother sympathizes with little Corinne, and to pacify the little girl she gets out a large box of wooden toys for Corinne to play with. Thoroughly happy, little Corinne amuses herself for a long time, but finally we see her little head drooping lower and lower until she is lost in the land of dreams. In the dream Little Dolly is kidnapped by the villain. She falls into the hands of the circus manager, and from her babyhood up she is trained to be an expert bare-back rider. Ten years after, passing through a small village in a parade, she is recognized and restored to the loving arms of her parents, and all is happiness.—Released February 17.

Vitagraph

THE LEAGUE OF MERCY.

Helen, an heiress and the ward of Martin Talbot, is interested in charity and rescue work; she is vice-president of the League of Mercy. Talbot's son makes love to her and her riches. In her visitations among the sick and poor she finds a young girl with a child. She takes the young mother to her home, aids and comforts her; tries to restore her to health. While she is thus engaged young Talbot, to whom she has become affianced, enters. The young mother recognizes him as the father of her child. Helen gives him back her engagement ring, denounces him and orders him from her home. The sick woman falls back dead. Helen adopts the child and brings it up as a member of her own household.—991 feet. Released February 10.

AT THE WHITE MAN'S DOOR.

An Indian tries to cheat the white man in a barter for some furs. The Indian is detected and defeated in his game; the redman arouses his tribe against the white man; they waylay him and wound him with a poisoned arrow, take him to their camp, where he is saved from death and released by an Indian Princess, who has fallen in love with him. When she withdraws the arrow from his wound she places it in the bosom of her dress. Following the white man to his home, she discovers he has a wife and child. In jealous rage she takes the arrow from her breast and

plunges it into the arm of the wife, who falls prostrate and unconscious. The white man compels her to administer to his wife as she did to him. The wife lives, and the Indian Princess goes to the base of the rapids, where she pierces her own arm and cries to the Great Spirit to receive her soul, dying a victim of her own vengeance.—1,000 feet. Released February 11.

CONSUMING LOVE.

Tommy and Jimmy are very much in love with Dolly. Their appetites, however, very much over-balance their affections. Joe, who is not over-blessed with this world's wealth, but who is bountifully blessed with chivalry, is favored by Dolly. Tom and Jim decide to get her a valentine. They purchase a gingerbread horse, but before they reach Dolly's home their appetite gets the best of them and they greedily devour the token of their youthful affections. Joe bargains with the shopkeeper for a stick of candy, to be paid for by running errands after school. He hurries to Dolly's home and presents his valentine to her, just as Tommy and Jimmy have given her the remains of the gingerbread horse. She rejects their gift, accepts Joe's and, triumphantly, he walks away with the fair Dolly, leaving Tom and Jim disgruntled and rebuked for their greed and selfishness.—975 feet. Released February 14.

WHEN THE LIGHT WANED.

Ann and Gordon are both artists unacquainted with each other. They go out into the open to paint. They are located some distance from each other. Gordon is accompanied by his collie dog. Having an eye for the beautiful, Gordon is attracted to Ann and tries to make her acquaintance, but with poor success. "Jean," his dog, helps him out by carrying his master's card to Ann, and in this way the ice is broken. They become fast friends, and through mutual interests and tastes their friendship ripens into love. Gordon works hard at his profession, and through constant application at his easel, he overtaxes his eyesight and becomes blind. Ann has not seen him for some time and does not know of his plight until she receives a note from him, making known his affliction. Jean is his faithful companion and comforter and she tries in every way she can to express her sympathy. Discouraged and disheartened, Gordon, led by Jean, makes his way to the river, where he meditates suicide. After receiving Gordon's note Ann hastens to his studio, finds he has moved and searches for him until she locates him, assisted by Jean, at the river's brink. She tenderly pleads with him and leads him to her home, assuring him that while she is able to work he shall never want.—994 feet. Released February 17.

Nestor

THE LIGHT BEYOND.

So studious and retiring in disposition was Dave Randal that no one, not even Annie Rodney herself, dreamed of his love. They had grown up together, and now that he worked for her father, she as frankly accepted his books and candy as of yore. Then, like a bolt from the clear sky, came the announcement of her engagement to the sailor, Robert Summers. Quietly Dave packed up his few belongings, then, leaving a letter of congratulation for Robert, in which he also acknowledged his love for the girl, the young man bade the Rodney family a hasty adieu, and departed for the city. The sailor and his bride had been married but two short years, when old man Rodney, much against the more experienced seaman's better judgment, induced his son-in-law to accompany him across the bay. Scarcely were they half way across, however, than a violent storm arose and although Annie, with baby Rosie in her arms, watched and waited on the shore that night and all the next day, the tide but brought her back two hats, their overturned boat and a broken oar. Five years passed, four of which Annie and little Rosie had spent in the city, and although at Mrs. Watkins', where they had recently moved, their two rooms were but small and scantily furnished, the child seemed happier than ever before. This, Annie learned from the landlady, was due to Rosie's new friend, the rising young contractor on the floor below. So when tired of watching her mother sew, the tiny girl would slip down-stairs to "help" her admirer—usually by cuddling in his arms and falling fast asleep. One day, however, the child failed to appear. He called Mrs. Watkins, who told him the little one was sick and pointed out the room. But at the door the contractor was stopped by the doctor; in a couple of days he might come. Sorrowfully the young man returned to his room, but when next he called it was Rosie's voice that bade him enter. Hearing voices, Annie hurried from the back room, and what was her surprise in discovering that the young contractor was none other than Dave Randal. Rosie was delighted. Clasping a chubby arm about the neck of each, she stoutly declared that Dave was to be her new papa—a prophecy which happily later on came true.—1,000 feet. Released February 15.

A QUIET EVENING AT HOME.

American

The reel deals with one George Gibson, a commercial traveler, who returns home from a rather long and arduous trip on the road. His wife is delighted to see him and gladly acquiesces in his request for a real old-fashioned, quiet evening at home. After making her spouse comfortable with slippers and pipe, the loving wife takes her sewing and they settle by the fire for a quiet, cozy time. But it is not to be. Things start to happen immediately. A neighbor reminds the wife of an engagement she has made some days prior, but to please her husband the wife excuses herself from keeping the appointment, saying that she expects her husband home at any moment. They once more settle down to their "quiet evening," but an answer comes to her message from the disappointed neighbor to the effect that she has sent over her mother and maiden aunt to take care of the house and look after George's comfort and wait for George's advent. The old ladies arrive and it is up to the wife to make good on her assertion that George had not yet arrived at home. The husband is therefore hidden in the next room, his wife promising to get away from the card game and relieve his embarrassing position at the first opportunity. She leaves. The old ladies, the mother and the spinster aunt, start to investigate their friend's flat and private affairs. In the meantime the maid and her janitor sweetheart return from a evening out and the maid, upon entering her room, catches sight of a pair of masculine feet under her bed. George has hidden there in order to be out of the sight of the old ladies upon their tour of the apartment. The maid thinks George a burglar and calls for help. By the time they are through with George he is a pitiable sight and everybody in your audience will have a sore side from laughter. There is sufficient slap-stick comedy in this reel that, when coupled with the logical and connected story it tells, it will undoubtedly prove to be one of the funniest reels released during the week.—985 feet. Released February 13.

IN THE LAND OF CACTUS.

A young engineer, employed in running claim lines, is in love with the daughter of the mayor of Red Cloud. He has been told by the girl's father to make good before proposing marriage and the gratification of the young people's love depends upon the possibility of the engineer's discovery of a good job. A railroad magnate visits Red Cloud to investigate the possibilities of running a road through the town. Duke Fisher, the outlaw, plans to abduct the magnate and hold him for a big ransom. He is enabled to carry out his plan while the magnate is being entertained at a picnic in the foothills. The magnate and the girl are strolling a short distance from the picnickers when the Duke and his gang fall upon them and carry them away. The young engineer, watching his sweetheart through a pair of field glasses, sees the abduction. He rides back to the picnic and spreads the alarm. The men are unarmed, so it is necessary to ride back to town to form a posse. The Duke has hidden in the hills. The young engineer discovers the hiding place, fights with the guard and throws him from the cliff. The body falls into the camp of the outlaws, precipitates a battle, during which the magnate and the girl are freed. The young engineer is wounded in a hand to hand fight with the Duke and is saved from death by the girl, who threatens the Duke with a forty-four. The windup is fast and exciting and the conclusion is the magnate's choosing the young engineer to build the new road and the union of the lovers.—980 feet. Released February 16.

WHAT SHALL WE DO WITH OUR OLD.

Biograph

"What shall we do with our old" is a greater problem than we realize at first casual thought. There is the pension for the soldier, but for the useful citizen wounded in the battle of life—nothing. In this army we find the ambitious, public spirited men, wearing away their physical and mental faculties in their struggle for a livelihood while shouldering the wheel of progress, under which juggernaut they are almost inevitably crushed. This Biograph subject illustrates the old carpenter starting off for work in the morning leaving at home a wife old and ill. At the shop a new foreman is put in charge, and a weeding of the old hands takes place, as the employer insists upon an infusion of young blood among his employees, hence the old man with others suffers the penatly of being old—discharged. At his age he finds it impossible to obtain employment, and having been active and independent all his life is too proud to seek charity. Later, his savings having been exhausted and his wife now seriously ill,

starvation promises to be their lot. He goes out to make a last effort for work, and on his way passes a residence before which stops an automobile. Two ladies alight, one carrying a dog for which the couple show great solicitation and care. As he views this scene, the old man cannot help feeling that a dog's lot is preferable to his. Weary and hungry he is driven to make a desperate attempt to obtain food by breaking into a butcher shop and stealing a basket of provisions. He is caught, however, by a policeman before he has gotten a block away and taken to the Night Court. Here, of course, his story is the oft repeated one, and little credence placed in it, so he is put back in the pen. The judge, a kindly disposed man, fearing he might have made a mistake, sends the officer to investigate. The officer returns with the report that the old man has not exaggerated the case. The judge then releases the old fellow and sends the officer home with him with aid—financial, medical and material. But it is too late, for the poor woman's life has gone out during her husband's forced absence.—994 feet. Released February 13.

FISHER FOLKS.

Steve Hardester, a handsome young fisherman, is infatuated with Cora, the village flirt. She, though really caring for him, must indulge her inclination to coquetry, laughingly flinging love back into his face, often making him the target of derision. Our story opens on the day of the Fair in the little fishing village. Bertha, a poor cripple, with a slightly deformed figure, but a pure sweet face, being too frail to undergo the toil of the fishergirl, ekes a livelihood selling flowers to the gallant fisherboys with which to deck their sweetheart's tresses. On this day Bertha starts out long before daybreak to gather the dewy blossoms and form them into nosegays for sale to the young swains before the opening of the Fair. This done long before the dawn, she reclines on the beach and dozes off through sheer fatigue and sleeps until the morning sun awakens her. Going through the village she meets Steve as he is about to enter his cottage.

Offering her bouquets, he purchases one to give to the object of his affection, Cora. Sad of heart, poor Bertha wishes she had some one to show her those little attentions, particularly Steve, as she has always loved the handsome young fisherman. Cora, though, imagining that she can have her choice of the boys on account of her attractiveness, takes delight in holding Steve's little favors up to ridicule and this occasion is no exception, for when he invites her to attend the Fair and presents her with the bunch of wild flowers, she pokes fun at it. This is the last straw and Steve snatches the flowers from her and crushes them under his heel, leaving her for good. This at first amuses Cora for she thinks herself irresistible and he will come back. But not so, for as he dashes back to his cottage he meets again the little flower seller. Her sweet face at once appeals to him and in a moment of pique through wounded pride, rather than a tender feeling for Bertha, he asks her to attend the Fair with him. Her joy is ecstatic at this and she and Steve make their way to the fair grounds, much to the chagrin of Cora, who has from a distance witnessed their meeting. However, Cora assumes an indifferent mein, feeling that Steve's action is induced by a spirit of revenge. This is at first true, but Steve's association with Bertha cultivates something more serious. He now realizes the worth of an affection born of a pure soul, and they become betrothed, their marriage following shortly after. Cora is now the one to suffer wounded pride. She realizes she has lost the best catch in the village, and to one whom she regards as so inferior. Obsessed by a desire for revenge she determines at any cost to wreak it. Some time later she visits the young couple's cottage, ostensibly to congratulate them, but upon leaving slips a note to Steve to meet her at the old trysting place. More than mere curiosity impels him to see her and on the eve of his departure on a long

cruise he is there to bid her an adieu. More than a year passes and no word comes from the fishing crew, until late one afternoon their vessel is seen in the distance slowly nearing the shore. The little village is at once alive with excitement. Kindly fishermen inform Bertha of the approach of the long absent fisher crew and she takes up her little charge, which had arrived in the meantime, to make her way as fast as possible to the landing place. Her heart is almost bursting with joy in the anticipation of Steve's surprise when she places in his arms their little son. But what grief awaits her, for Cora arriving first lures him off to her cottage, Bertha arriving just in time to see them going hurriedly up the beach. Almost heartbroken and forlorn she wends her way homeward when at a turn in the lane she comes face to face with Steve. What a shock. He now realizes what a contemptible brute he is and so has not the heart to face her. Bertha, however, has nothing but forgiveness and love portrayed in her countenance so Steve takes the little one from her outstretched arms and together they go to their humble cottage, leaving Cora transfixed with suppressed rage on the sands.—998 feet. Released February 6.

THE RAJAH.

Edison

As its title indicates, this is a film version of the popular English play by William Young. It is the story of an unemotional young English officer, Hugh Wyncot, whose languor, however, is really a mask which covers a character full of quiet determination, decision and promptness to act when occasion requires. At the opening of the story he is in India and has been left a fortune and the guardianship of a young woman. The latter resents the idea of a stranger and a young man being appointed as her protector and resolves, upon his arrival in England, to teach him that his rights are legal only. When he does arrive he finds that the estate has been badly managed and that the mines, which are one of the chief sources of income, and in a practical state of seige; the men being on strike and under the leadership of an ex-convict by the name of Cragin. Wyncot reads their written demands and promises to *think* about them, much to the disgust of the girl who would like to have him take some more active measures to bring the strike to an end. Instead, however, he gets information from London as to the character of the leader of the men, and when the right times comes and he is confronted by them with threats, he discloses to the astonished workmen the information he has from the detective bureau in London. Of course they repudiate their leader and accept the fair arrangement of wages and work offered by their new employer. This rather opens the girl's eyes to the real character of the man she has wronged in her thoughts, and when Cragin steals into the house with a loaded pistol, resolved to take revenge upon the man who has defeated his plans, she pleads with him and finally offers him free passage out of England to a new country and a chance to make a fresh start in life, if he will give up his murderous plan. In the middle of the interview Wyncot is heard returning and the man, Cragin, secretes himself behind the curtains. She writes a pass which she asks Wyncot to sign, and which he believes is for herself and is a further indication of her dissatisfaction with the state of affairs and with his guardianship. But before he signs he hears a sound and stepping to the curtain, faces Cragin with the gun. True to his imperturbable calm, he walks to his desk in spite of the leveled gun and takes from the drawer,—not a pistol for his own defence, but a roll of bank notes. Then signing the pass and presenting it with the bank notes to Cragin, he invites him to leave the country. This generosity is too much for the ex-convict and he congratulates the girl upon her guardian and intimates that he may become more to her, an intimation which is apparently about to be fulfilled when the story ends.—1,000 feet. Released February 14

GETTING SISTER MARRIED.

Essanay

Released on Valentine's day, this comedy is filled with the proper spirit of the little god Cupid. Paul Harvey is in love with pretty Margaret Cameron, but the match is objected to by Margaret's father, whose statement is that they cannot get married until Margaret's elder sister Jane is happily wedded. Jane is a spinister and about ten years behind the style of dress, so to Paul and Margaret it seems little likely of their ever getting married. However, they have not observed that Senor Vacher, the music teacher to the Misses Camerons is sweet on Jane, and Paul, hoping to palm off the unlucky Jane on one of his bachelor club friends, does not consider the senor in the running at all. Paul first tries out a young friend of his but as soon as the latter sees Jane's old-fashionedness, he makes haste to get away. Paul then enlists three others and after all have failed the young people give up in despair. But as the last suitor is pleading his case the music teacher returns and in his jealousy makes the revelation that Jane

and he have been secretly wedded for the past six months and the only reason for the secret was the fear of disapproval of Jane's father. Of course this makes the road clear for Margaret and Paul and the happy quartette seek the parental blessing. Needless to say, father congratulates them and if there is anyone unhappy it is the one poor suitor who had made the senor jealous.—1,000 feet. Released February 14.

THE CATTLEMAN'S DAUGHTER.

Old Jim Brown, a Western ranchman, forbids the marriage of his daughter Gladys to Frank Carpenter, the foreman of a neighboring ranch, and sternly demands that his daughter choose between Carpenter and himself. His object is to marry his daughter to the son of a rich miner but the girl's love defies parental disapproval and she leaves the house of her father forever. A year later Gladys, now the wife of Carpenter, falls seriously ill. As a crowning climax to their misfortunes Carpenter loses his position and is reduced to poverty. The doctor having refused to make any more visits to the sick woman's bedside without remuneration. Carpenter resorts to desperate means and upon opportunity rifles the safe of his wife's father. Only the timely reconciliation of Gladys and her father saves him from the penitentiary.—1,000 feet. Released February 18.

Expressions We Frequently Hear

"Nothing But Features Shown."

Among the Picture Theaters

THE ROLL OF THE STATES.

ALABAMA.

A new moving picture theater has been opened at Jasper by J. S. Belmo.

ARKANSAS.

The Rogers Maroon band of Rogers, has organized a stock company to be known as the Rogers Maroon Band Amusement Company, which will open a moving picture theater in the Roger's Opera House. Lloyd Little is president of the company, Harley Sanders secretary and treasurer, and C. M. Whitney manager.

CALIFORNIA.

The Opera House at Red Bluff will be converted into a moving picture theater which will be conducted by Messrs. Knight and Greenwell, who were formerly connected with the Broadway theater at Chico.

Plans have been prepared for the erection of a moving picture theater at the corner of Maneta avenue and Thirty-sixth street, Los Angeles, which will be conducted by J. W. Comfort.

R. W. Woodley, who formerly operated the Optic moving picture theater on South Broadway, Los Angeles, will open a first class house at 533 South Main street that city, which will have a seating capacity of about 900.

Plans have been drawn and accepted for one of the finest moving picture theaters in America, to be erected for Arthur S. Hyman on the ocean front, Zephyr avenue, Venice, the same to be completed by May 1. In addition to ample stage accommodations, boxes, lodges and balcony, the new theater will have a fine "green room," excellent dressing rooms and comfortable living quarters for the performers. This last feature will be a novelty in theater arrangements, but one that will appeal to those who will enjoy a stay at this seaside playhouse, for they will have the inviting waters of the Pacific within a stone's throw. The cost of the new theater and its ground will approximate $125,000.

A moving picture theater will be erected on Telegraph avenue, Oakland, by the Idora Park Company.

Plans are being prepared for the moving picture and vaudeville theater to be erected at the corner of Horizon avenue and Ocean Front in Venicia, by Davis Evans.

CANADA.

James Wilmott has been granted permission to erect a moving picture theater at the corner of Barton and Emerald streets, Hamilton, Ont.

COLORADO.

The moving picture theater formerly operated by Messrs. Hoyle and Schultz of Canon City, has been purchased by Robert W. Foss and L. C. Ludwig.

CONNECTICUT.

The Pastime Theater of Hartford has been reopened under new management.

Certificate of incorporation has been filed with the secretary of state for Stevens and Jackson, Inc., of Sprague. The capital stock is $15,000 and the purpose of the organization is to conduct vaudeville and moving picture theaters. The incorporators are John C. Stevens, William C. Jackson and Chas. Headen.

GEORGIA.

The Gordon moving picture theater of Barnesville has been purchased by Messrs. S. C. Harris and David E. Kleckley who will continue to conduct it as a first class picture house under the management of W. W. Bankston.

The New Electric Theater is the name of a new picture house recently opened at Dublin. The house is thoroughly equipped in an up-to-date manner, is seated with opera chairs, well ventilated and will be conducted in strictly first class style.

L. A. Mitchell has leased the property at 620 Cherry street, Atlanta, and will convert the same into a moving picture theater.

M. C. Ebertstein, who operates the Odeon Nickelodeon of Savannah, is planning to open a new house at 125 Broughton street, that city.

IDAHO.

Messrs. Alexander & Schumy, who operate a moving picture theater at Nampa, have purchased the Elk Theater at Weiser.

MAINE.

Adolph Walters has opened a moving picture theater in Dixfield.

MASSACHUSETTS.

The Majestic theater of Easthampton is devoted to moving pictures two nights in the week.

NEW JERSEY.

A moving picture theater has been opened at Swedesboro by Aaron L. Miffiin, of Salem.

The Moving Picture Palace of Riverside has been undergoing many improvements.

NEW YORK.

The Wonderland moving picture theater of Mechanicsville has been leased by Edward Lazette.

George L. Gramer, of Syracuse, will open a moving picture theater at Liverpool, in the Hand block.

A moving picture theater, principally for Italians, will be opened at Carthage in the Conley block, by Pietro Di Cenzo.

OHIO.

The Princess, a high class moving picture theater of Youngstown, until recently operated by Walter Hanitch and Paul Fitch, has been purchased by Messrs. Feiber and Shea, lessees of the Park Theater. The Princess will be devoted to high grade moving pictures while the Park Theater will be devoted to vaudeville.

The Queen theater of Painesville, ever alert in its efforts to serve its patrons, has installed a new moving picture machine, making the second, which enables the management to keep a picture on the screen without interruption.

The new Lyceum moving picture theater which will soon be thrown open to the public at Findlay, will be one of the most attractive that has ever been opened in that city.

OKLAHOMA.

John Tindale, formerly of the Odeon theater of Barnesville, has purchased a moving picture theater at Iola, Kans.

Judge Lieber, of Muskogee, known as the king of picture shows, will erect a summer theater on Court street in that city.

R. M. McGinity, former owner of the Princess theater at Okmulgee, has turned his theater over to the ladies of the Civic League, under whose auspices it will be operated in the future. Mr. McGinity, however, will act as manager.

OREGON.

A moving picture theater will be erected, Sixth-seventh street, between Fourth-fifth and Foster avenue, by H. E. Brons.

Dr. M. S. Fenton of Portland has been granted permission to erect a moving picture theater in that city, located on Grand avenue, between Hawthorne avenue and East Clay street. The house will be of reinforced concrete.

SOUTH DAKOTA.

The new Bijou moving picture theater recently opened its doors to the people of Rapid City.

The Majestic, of Sioux Falls, has been purchased by John Bigger.

A moving picture theater has been opened at Woonsocket by G. W. Buckman and Son.

TENNESSEE.

The Chattanooga Multiplex Phonograph Company of Chattanooga will engage in the manufacture of moving picture films. The promoters claim that in addition to manufacturing moving pictures they have a superior type of phonograph which will soon be put on the market.

WISCONSIN.

The Opera House and Bijou theater at Rhinelander, formerly operated by Messrs. Hanson and Taylor, have changed hands, F. C. Kruckeberg having taken over the management of the same. Mr. Kruckeberg has had wide experience in the moving picture business, which assures the patrons of these houses the best to be had in this line.

Architect F. W. Christianson is preparing plans for a moving picture theater to be erected at Greenfield and Eleventh avenues, Milwaukee.

Messrs. E. A Kleiner and B. B. Cobbare are making arrangements to open a moving picture theater in Sun Prairie.

A new moving picture theater is being located at Burlington by Edward Westburg. The house is located at the corner of Geneva and Pine streets.

Record of Current Films

Believing the classification of film pictures by the nature of their subjects to be of greater importance to the exhibitor than classification by maker, The Nickelodeon has adopted this style in listing current films. Exhibitors are urged to make use of this convenient tabulation in making up their programs. Films will be listed as long in advance of their release dates as possible. Film manufacturers are requested to send us their bulletins as early as possible. Reasonable care is used, and the publishers cannot be responsible for errors.

LICENSED

Date.	Title.	Maker.	Length.
	DRAMA		
1-16	Buddy	Selig	1,000
1-16	His Trust	Biograph	996
1-16	Saved by Her Prayers	Pathé	331
1-17	The Sealed Letter	Gaumont	837
1-17	With Interest to Date	Edison	1,000
1-17	His Master's Son	Essanay	1,000
1-17	Three Men and a Maid	Vitagraph	1,000
1-18	Her Chum's Brother	Kalem	980
1-18	Trailed by an Indian	Pathé	495
1-18	By the King's Order	Eclipse	991
1-19	His Trust Fulfilled	Biograph	999
1-19	A Brother's Redemption	Lubin	1,000
1-19	An Englishman's Honor	Selig	1,000
1-20	Mike the Miser	Edison	990
1-20	Robbie and the Redskins	Kalem	850
1-21	The Border Ranger	Essanay	985
1-21	The Kleptomaniac's Repentance	Gaumont	965
1-21	The Marked Dollar	Pathé	968
1-21	Cast up by the Deep	Vitagraph	1,001
1-23	Fate's Turning	Biograph	998
1-24	An Eventful Evening	Edison	
1-24	A Sin Unpardonable	Essanay	1,000
1-24	The Twilight of a Soldier's Life	Gaumont	945
1-25	Saved by Telegraphy	Pathé	720
1-25	The Sailor's Return	Eclipse	639
1-25	The Secret of the Still	Kalem	950
1-26	How Mary Met the Cowpunchers	Melies	980
1-26	Father Love	Lubin	1,000
1-26	The Spy	Selig	
1-27	Girl of the Mountains	Vitagraph	
1-27	The Black Bordered Letter	Edison	1,000
1-27	Puritans and Indians	Kalem	970
1-27	Il Trovatore	Pathé	970
1-28	The Two Reformations	Essanay	
1-28	The Baby Fortune Hunters	Gaumont	682
1-30	The Little Circus Rider	Selig	
1-30	The Escape from the Tuileries	Pathé	1,000
1-30	A Wreath of Orange Blossoms	Biograph	993
1-31	Jean Rescues	Vitagraph	970
1-31	The Last Curtain	Gaumont	823
2-1	The Sheriff's Sister	Kalem	1,000
2-1	Disinherited	Eclipse	990
2-2	Age vs. Youth	Lubin	1,000
2-2	Curse of the Red Man	Selig	1,000
2-2	Only a Sister	Malies	980
2-2	Three Sisters	Biograph	997
2-3	Selling Old Master	Edison	990
2-3	The Trail of the Pomos Charm	Kalem	1,005
2-3	The Slave's Revolt	Pathé	722
2-3	Society and the Man	Vitagraph	880
2-4	A Cowboy's Devotion	Pathé	1,000
2-4	Carmenita, the Faithful	Essanay	995
2-6	Heart Beats of Long Ago	Biograph	997
2-7	The Doctor	Edison	1,000
2-7	The Deluge	Vitagraph	
2-7	The Strongest Tie	Gaumont	605
2-8	Little Sister	Kalem	970
2-8	Legally Dead	Pathé	1,000
2-8	On the Border of the Forest	Eclipse	895
2-9	Tony the Greaser	Melies	980
2-9	Thelma	Selig	1,000
2-10	The Missing Bride	Pathé	800
2-10	His First Commission	Edison	990
2-10	The Broken Trail	Kalem	1,000
2-10	The League of Mercy	Vitagraph	
2-11	Silver Leaf's Heart	Pathé	1,000
2-11	At the White Man's Door	Vitagraph	
2-11	The Bad Man's Downfall	Essanay	1,000
2-11	Napoleon in 1814	Gaumont	797
2-13	What Shall We Do with Our Old?	Biograph	994
2-13	A Show Girl's Stratagem	Lubin	1,000
2-13	The Survival of the Fittest	Selig	1,000
2-14	The Rajah	Edison	1,000
2-14	Consuming Love	Vitagraph	
2-15	Catherine Howard	Eclipse	1,005
2-15	Grandmother's War Story	Kalem	975
2-15	A Western Courtship	Pathé	734
2-16	Fisher Folks	Biograph	998
2-16	The Buccaneers	Selig	1,000
2-16	Billy and His Pal	Melies	980
2-17	A Stage Romance	Edison	
2-17	The Lost Ribbon	Kalem	1,000
2-17	When the Light Waned	Vitagraph	
2-18	Lieut. Scott's Narrow Escape	Pathé	1,000
2-18	The Cattleman's Daugher	Essanay	1,000
2-18	Saul and David	Gaumont	128
2-18	At the End of the Road	Gaumont	838
	COMEDY		
1-16	Will It Ever Come to This?	Lubin	715
1-16	Easy Coin	Lubin	250
1-16	Marguerite's Birthday	Pathé	659
1-18	Uncle's Birthday Gift	Edison	995
1-19	Changing Cooks	Melies	980
1-20	The Tables Are Turned	Pathé	981
1-20	The Girl in the Film	Vitagraph	963
1-23	Father Makes Himself Useful	Lubin	975
1-23	How Max Went Around the World	Pathé	633
1-23	A Robust Patient	Selig	1,000
1-23	Gasoline for a Tonic	Pathé	361
1-24	It Did Look Suspicious	Vitagraph	
1-25	The Lover and the Count	Edison	995
1-25	Whiffles' New Sleeve	Pathé	282
1-26	The Poor Sick Men	Biograph	991
1-28	Davy Jones in the South Seas	Vitagraph	
1-28	Father Against His Will	Pathé	720
1-28	Betty Rolls Along	Pathé	289
1-30	His Bogus Uncle	Lubin	1,000
1-31	The Jilted Joker	Essanay	640
1-31	Hank and Lank—They Make a Mash	Essanay	366
2-1	Bumptious as Romeo	Edison	975
2-1	Hearts, Hunger, Happiness	Pathé	690
2-4	A Queen for a Day	Vitagraph	995
2-4	Jiggers Looks for a Job	Gaumont	537
2-6	A Double Elopement	Lubin	990
2-6	Max Has the Boxing Fever	Pathé	561
2-6	Too Much Mother-in-Law	Selig	1,000
2-6	An Imitator of Blondin	Pathé	400
2-7	A Woman's Voice	Essanay	
2-7	Ten Words for Twenty-Five Cents	Essanay	
2-7	Jiggers' Moving Day	Gaumont	895
2-8	Two Valentines	Edison	1,000
2-9	Priscilla's Engagement Kiss	Biograph	997
2-9	The Petticoat Sheriff	Lubin	1,000
2-13	Betty's Apprenticeship	Pathé	689
2-14	Getting Sister Married	Essanay	1,000
2-14	The Reformation of the Suffragettes	Gaumont	665
2-15	The Ransom of Red Chief	Edison	
2-17	Whiffle's Double	Pathé	499
2-18	The New Stenographer	Vitagraph	
	SCENIC		
1-17	A Water Contest	Gaumont	168
1-18	Sea Birds in Their Haunts	Pathé	462
1-20	U. S. Light Artillery in Action	Kalem	95
1-24	Firemen's Parade	Vitagraph	
1-25	Scenes in Jersey Island	Eclipse	296
1-28	Gorges of the Bourne	Gaumont	293
1-31	At Eventide	Gaumont	173
2-4	Krimmel Waterfalls	Gaumont	435
2-10	Review of Chilean Troops	Pathé	180
2-11	Autumn Leaves	Gaumont	185
2-14	Land Marks of Avignon	Gaumont	338
	INDUSTRIAL		
2-1	Practical Brook Trout Breeding	Pathé	279
2-3	The Rice Industry in Japan	Pathé	256
2-8	Canadian Iron Center, Port Arthur	Eclipse	110

DAILY LICENSED RELEASES.

MONDAY: Biograph, Lubin, Pathe, Selig.

TUESDAY: Edison, Essanay, Gaumont—Kleine, Vitagraph.

WEDNESDAY: Edison, Kalem, Eclipse—Kleine, Pathé.

THURSDAY: Biograph, Lubin, Melies, Selig.

FRIDAY: Edison, Kalem, Pathe, Vitagraph.

SATURDAY: Essanay, Gaumont—Kleine, Pathe, Vitagraph

INDEPENDENT

Date.	Title.	Maker.	Length.
	DRAMA.		
1-16	Melody	Imp	995
1-16	The Folks Back Home	Yankee	
1-17	Texas Ted's Defense	Bison	900
1-18	A City Wolf	Atlas	
1-18	The Will of a Western Maid	Champion	
1-18	Their New Minister	Nestor	
1-18	For the Child's Sake	Revier	500
1-18	The Blue Domino Disguise	Ambrosio	500
1-19	The Bonanza King	American	
1-19	A Sad Fascination	Itala	900
1-20	Returned to the Fold	Yankee	
1-20	A Reporter's Romance	Solax	
1-20	The Redskin's Secret	Bison	900
1-20	A Dreadful Dilemma	Lux	586
1-20	The Old Curiosity Shop	Thanhouser	1,000
1-21	A Noble Heart	Powers	
1-21	The Vows	Reliance	900
1-21	The Trunk Mystery	Great Northern	
1-23	The Dream	Imp	1,000
1-23	The Convict's Last Chance	Yankee	
1-24	When Love Was Blind	Thanhouser	1,000
1-24	A Wife's Love	Powers	
1-24	The Red Man's Wrath	Bison	900
1-25	A Wife's Calvary	Ambrosio	500
1-25	For Remembrance	Reliance	900
1-25	The Man in 23	Nestor	
1-25	Irish Hearts	Atlas	
1-25	Why He Went West	Champion	950
1-26	Bertie's Bandit	American	1.000
1-26	Phone 1707 Chester	Imp	997
1-26	The Revenging Picture	Itala	900
1-27	An Infamous Son	Lux	652
1-27	Trials of Bud Brown	Bison	900
1-27	Stealing a Ride	Thanhouser	
1-27	A Son of Old Glory	Yankee	
1-27	His Best Friend	Solax	
1-28	The Masqueraders	Powers	
1-28	The Last Laugh	Reliance	900
1-30	The Genius	American	965
1-30	The Taxicab Mystery	Yankee	
1-31	For My Pal	Powers	
1-31	Only in the Way	Thanhouser	
2-1	A Brass Button	Reliance	900
2-1	His Great Sacrifice	Atlas	
2-1	Judged by Higher Power	Champion	950
2-1	The Bridal Trail	Nestor	
2-2	The Mission in the Desert	American	985
2-2	Coachman of the Village	Itala	900
2-3	The Counting House Mystery	Yankee	
2-3	Adrift	Thanhouser	
2-3	A Squaw's Bravery	Bison	900
2-3	Back to the Old Homestead	Lux	944
2-4	The Command from Galilee	Reliance	900
2-4	The Cattle King of Arizona	Powers	
2-4	The Criminal Chief's Capture	Great Northern	
2-6	A Pittsburg Millionaire	American	985
2-6	Doctor Against His Will	Eclair	984
2-6	At the Duke's Command	Imp	1,000
2-6	Foiling the Camorra	Yankee	
2-7	The Half-Breed's Plan	Bison	900
2-8	Kelly, U. S. A.	Atlas	
2-8	The Transgressor	Nestor	
2-8	The Schoolma'am's Courage	Reliance	900
2-9	John Milton	Itala	900
2-10	Was She Justified?	Yankee	
2-10	The Norwood Necklace	Thanhouser	
2-10	The Salted Mine	Bison	900
2-10	The Orphan's Friend	Lux	711
2-11	Found Again	Great Northern	
2-11	The Angel of His Dream	Powers	
2-11	The Little Avenger	Reliance	900
2-13	The Elixir of Bravery	Eclair	424
2-13	Her Darkest Hour	Imp	1,000
2-13	Condemned to Death	Yankee	
2-14	For Her Sake	Thanhouser	
2-15	Coals of Fire	Atlas	
2-15	Three Men	Reliance	900
2-16	In the Iand of Cactus	American	1,000
2-16	The Convert	Imp	1,000
2-16	A Heroine of '76	Rex	910
2-17	Checkmate	Thanhouser	
2-18	Under Southern Skies	Powers	
	COMEDY		
1-16	The Battered Bride Grooms	American	525
1-16	A Dental Disaster	American	450
1-16	My Wife's Hat	Eclair	482
1-16	Jealousy of Sosthenes Ramulot	Eclair	478
1-17	A Montana Love Story	Powers	
1-17	Lover's Trials	Powers	
1-17	Bertie's Brainstorm	Thanhouser	1,000
1-18	You Try It	Revier	500
1-18	The Country Girl	Reliance	900
1-18	A Tailor's Queer Advertisement	Ambrosio	500
1-19	His First Patient	Imp	500
1-19	The Rev. Goodleigh's Courtship	Imp	500
1-20	His Faithful Furniture	Lux	360
1-21	The Visit of a Friend	Itala	500
1-21	A New Kind of an Arm Chair	Itala	500
1-23	When a Man's Single	American	1,000
1-23	Painless Extraction	Eclair	508
1-23	Kill the Fly	Eclair	442
1-24	Little Dorothy	Powers	
1-25	Tweedledum Within a Cask	Ambrosio	500
1-27	Prompt Payment	Thanhouser	
1-27	Little Willie Goes Cycling	Lux	236
1-28	Triumph of Intelligence	Great Northern	
1-28	Mr. Muggins Has His Sewing Done	Great Northern	
1-28	My Son Is Guilty	Itala	900
1-30	Maid or Man	Imp	995
1-30	The Emperor's Lunch	Eclair	603
1-30	The Elusive Robber	Eclair	373
1-31	A Tough Tenderfoot	Bison	900
2-1	The Return from Seaside Bathing	Ambrosio	500
2-1	Tweedledum Tries Winter Sports	Ambrosio	500
2-2	An Imaginary Elopement	Imp	500
2-2	The Mix-Up	Imp	500
2-3	Ring of Love	Solax	
2-4	The Feast of Foolshead	Itala	900
2-7	The Westerner and the Earl	Thanhouser	
2-7	Ferdie's New Shoes	Powers	
2-8	At Double Trouble Ranch	Champion	
2-8	Tweedledum as a Detective	Ambrosio	500
2-9	On the Installment Plan	American	560
2-9	Too Much Aunt	American	430
2-9	The Mirror	Imp.	500
2-9	When the Cat's Away	Imp.	500
2-10	Mixed Pets	Solax	
2-10	That Horse Did Run	Lux	272
2-11	Foolshead at the Kinematograph	Itala	900
2-13	A Quiet Evening at Home	American	1,000
2-13	Mr. Faddleaway is on Strike	Eclair	522
2-14	An Unforeseen Complication	Powers	
2-15	Her Three Proposals	Champion	950
2-17	Corinne in Dollyland	Solax	
2-17	Her Birthday Surprise	Yankee	
	SCENIC.		
2-8	The Savoy Cavalry	Ambrosio	500
2-11	A Trip Through Mexico	Powers	

DAILY INDEPENDENT RELEASES

MONDAY: American, Eclair, Imp, Yankee.

TUESDAY: Bison, Powers, Thanhouser.

WEDNESDAY: Ambrosio, Atlas, Champion, Nestor, Reliance.

THURSDAY: American, Imp, Itala.

FRIDAY: Bison, Lux, Solax, Thanhouser, Yankee.

SATURDAY: Columbia, Gt. Northern, Itala, Powers, Reliance.

THE NICKELODEON

$2.00 Per Year | Published Weekly by ELECTRICITY MAGAZINE CORPORATION, Monadnock Building, Chicago | 10 Cents Per Copy

Vol. V | CHICAGO, FEBRUARY 18, 1911 | No. 7

The Nickelodeon

Published Every Saturday by the

ELECTRICITY MAGAZINE CORPORATION

MONADNOCK BUILDING, CHICAGO

Long Distance Telephone: Harrison 3014

Ed J. Mock and Paul H. Woodruff, Editors James B. Crippen, Associate Editor

New York Office: 1433 Hartford Bldg., 41 Union Square
LAURENCE F. COOK, Eastern Representative
Telephone, Stuyvesant 1672

London Office: 36 Maiden Lane, Covent Garden
S. RENTELL & CO., Representatives

Table of Contents

TERMS OF SUBSCRIPTION

United States, Cuba and Mexico, $2.00 per year; Canada, $2.50 per year; Foreign countries within the Postal Union, $3.00 per year; Single Copy 10 cents.

Distributing Agents: The Western News Company and its International Branches.

NOTICE TO ADVERTISERS

Changes of advertising copy should reach the office of publication not less than five days in advance of date of issue. Regular date of issue, Saturday of each week. New advertisements will be accepted up to within three days of date of issue, but proof of such advertisement can not be shown.

NOTICE TO SUBSCRIBERS

Remittances should be made by check, New York draft or money order, in favor of THE NICKELODEON. Foreign subscriptions may be remitted directly by International Postal Money Order, or sent to our London office The old address should be given as well as the new, and notice should be received two weeks in advance of the desired change.

Scene from the Pathé American Feature Film, "The Changeling."

THE NICKELODEON

AMERICA'S LEADING JOURNAL OF MOTOGRAPHY

VOL. V | CHICAGO, FEBRUARY 18, 1911. | No. 7

EDUCATIONAL MOTOGRAPHY.

MOTOGRAPHY'S educational qualities are so very obvious that it seems superfluous to continue to comment on them. THE NICKELODEON and some other papers have published enough from time to time along this line to show that motography is indeed a powerful factor even now in educational work. Bacteriological, biological and radiographic subjects have been described, each with an illustrated article of its own, in former issues of this paper.

But however obvious a conclusion may be to that minority which has time to meditate upon it, the hurrying majority is pretty apt to overlook it in the stress of present business. So with a subject as important as motographic education it may become necessary to reiterate even to the point of boredom, lest the truth be not brought home to some of those whose thoughts are occupied elsewhere most of the time.

On another page we present an abstract of a somewhat lengthy series of articles, at present appearing in the *Bioscope* of London. These articles were prepared by the editor of that excellent publication, and while they recount nothing particularly new in that special field of endeavor, they form a valuable resumé of previous accomplishments. In abstracting them we have endeavored to retain the best of each article for the benefit of those who would perhaps be unable to spare the time for a consideration of the whole series.

The first educational subject which is mentioned in the article is Röntgen-ray motography undertaken recently by German scientists and described in THE NICKELODEON for October 15. These pictures are strikingly novel and unquestionably scientific; therefore, interesting. Unfortunately they are not deserving at present of any extended serious consideration for the reason that the process of taking them is impracticable. Indeed it is doubtful whether the X-ray will ever be adapted to operation in conjunction with the motographic apparatus. The motographing of surgical operations is another matter, and of course is in actual use today.

The author then takes up the subject of pictures such as those used by the American National Red Cross Society. These we have previously spoken of as "uplift" pictures, and treated them editorially in our issue for January 21, 1911.

But probably the most interesting pictures of all from a scientific standpoint are the studies of bacteriology. We have had a number of these subjects, which are referred to at some length in the article; and the *Bioscope* quotes Sir Ray Lankester, an eminent biologist, as expressing his keen appreciation of such pictures in the following terms:

> The method of instantaneous photography of minute organisms is a valuable means of research. Points of structure are revealed which were not previously seen, and, moreover, these new discoveries are permanently recorded. For the study and analysis of the movement and the details of the action of locomotor organs (such as *cilia, flagella,* and *pseudopodia*), the instantaneous films are nothing less than a revelation. While these methods do not take the place of the actual microscope they can supplement it in an invaluable way. Moreover, they can give to large gatherings of people, with the greatest ease and absolute truthfulness, a real view of microscopic life, and enable everyone to have a true conception of what the microscopist and biologist are actually studying; they make science less remote—less the possession of the privileged few, and they enlist the sympathy and interest of our fellow-citizens for its glorious work. I look forward to the provision, not later than next year, of a cinematograph lantern in every board school, and in every college class room; and if I still had a biological laboratory under my direction (as for most of my past life I have had) I would obtain the film-producing photographic apparatus and set to work to make discoveries, and—and what is a great charm of the new method—their simultaneous record, by producing films of every kind of moving microscopic organisms. I should study not merely the combined effect when rolled through the lantern, but the actual instantaneous phase permanently printed in each picture of the 6,000 which make up a five-minute record.

We can only add that Sir Ray Lankester's praise of bacteriological motography would be equally applicable and apropos in the language of the physicist, the naturalist or even the chemist—as some of the films listed in the Urban catalogue bear ample testimony.

And in closing let it be said, the difficulties of presenting these subjects before the public, or indeed before a special audience, lie not in the vagaries of public taste, but rather in the faulty system of distribution at present employed in marketing films. There should be an absolutely open market for the disposal of educational subjects of all kinds, and they should be available either by sale or rental to any one who wishes to use them and who will pay the set price. A step in this direction has already been taken in England by Kineto, Limited, that concern removing the release dates from all its scientific subjects. Unless similar tactics are adopted here this country is apt to fall behind in the development of educational motography.

THE PASSING OF THE WESTERN SUBJECT.

THERE seems to be prevalent a sentiment that the Western photoplay has outrun its course of usefulness and is slated for an early demise. The old thrills are exhausted and people want something new. It is just simply the case of a gold mine that has been worked to the limit and can give no more desirable ore. Apparently all the old Western expedients are frayed to a frazzle and audiences have become familiar with them to the point of contempt. Given the first one hundred feet of a reel and any photoplaygoer of average sophistication can predict the rest. Western melodramas have lost their ability to create suspense, and minus this quality they have small excuse for being. All that remains is the scenery, and even that has lost its novelty, though always holding interest, if well chosen.

Is there any hope for the survival of Western subjects? There is a little, but not much. The Western subject might gain a renewed lease of life if it made a change of base. It might drop the old melodramatic conventions and really attempt to portray the West. This has never been done except in outward seeming, and so far as material features go. The real spirit of the West has scarcely been touched. All we have seen has been turbulence, turmoil and gun-play—an emotional rough-house. Now, in all truth, is not the really distinctive and essential spirit of the West something quite different from this? Has it not been co-operation instead of conflict? Harmony instead of discord? It surely must have been the co-operative spirit of the inhabitants that made the West, and not their antagonisms and dissensions. We should have today no Seattles and Friscos, no Arizona deserts transformed into garden paradises, if the men of the West had been a bunch of rowdies ever ready to jump at one another's throats. If one-half the criminality and turmoil that photoplays have shown had really existed, there would have been no West. The photoplay has simply harped on a few strings and led people to think that these were the full orchestra. There exists a whole realm of subject matter, exemplified in the hustling co-operative spirit of the West, which lies virgin and untouched so far as the photoplay is concerned. Generous tappings from this reservoir of novelty might prove to be the elixir of life which the Western photoplay needs.

But there is very little drama to be drawn from this source, so after all the prospect is not as promising as it seems. There is no great amount of drama in co-operation; drama means conflict and co-operation means harmony. The only conflict co-operation can offer is the conflict between man and nature, which is certainly vast enough but not very dramatic. Nature makes a poor villain because she is impersonal and non-vindictive. It is only when the forces of conflict are personal, man vs. man, that they offer good material for drama—especially melodrama.

And now we get down to the real point. It is melodrama that the film makers are seeking. When they went West, it was with no sympathetic, high-minded intention of portraying real Western conditions, of interpreting its life and spirit. The film makers went West to find a stamping ground for melodrama. And they were attracted thither for two reasons: first, because certain phases of life in the West, where passions had been strong and the will unchecked by law, gave a plausible basis for melodrama; and second, because the West was not the East. The strangeness and unfamiliarity of the life out there, as seen from the East, cast a glamor of plausibility around lurid, impossible themes, giving room at least for the benefit of the doubt. Thus the West served the photoplay-producers as a convenient peg to hang either crude melodrama or crude farce upon, not because these were essentially characteristic of the West, but because the East could easily be fooled into thinking so.

It is the effete Eastern who demands crude hand-to-hand melodrama; he loves it for its tingling novelty. But knowing how incongruous such drama is with the conditions of his own tepid and well-policed existence, he must needs turn to the West where he fondly supposes *anything* may happen. Consequently those persons who purvey Western literature and drama for the Eastern market have emphasized the "wild and woolly" qualities, and let the rest go.

But the old trick is failing. No longer does it thrill. Through repetition after repetition it has lost its power to mystify and enthrall. People are tired of cowboy melodramas. The leading manufacturers ceased making them long ago, having put their ear to the ground and hearkened to the rumble of dissatisfaction. The other manufacturers will follow before long. Does this mean we will have no more melodrama? *No*. We will always have melodrama. What the makers need is a change of background. Some have already turned to Mexico, and some to the missions of California. Edison tapped the Canadian northwest, but did not exhaust it by any means. And there is still Alaska. Almost any picturesque and romatic locality will do, so long as it gives us a respite from the cowboy with his sombrero, his chaps and his gun.

SCENARIO AUTHORSHIP.

THE act of the Edison people in courting publicity for their more eminent authors once more brings up the subject of scenario writing. There is no question but that the average author desires public credit for his work; nor is his desire prompted entirely by egotistical motives. The author has goods to sell, and it is only right that those goods which he manufactures should bear his label. The use of a nom-de-plume can not be regarded as an exception to the rule, because publicity gained in this manner may be just as helpful to the writer as it would be with his own name. We need only mention Mark Twain to prove this contention. Indeed, an author has little incentive to write, however good his remuneration, if public credit for his work be denied him.

This is one reason why comparatively few good writers have entered the motion picture field. It is true that the remuneration is small as compared, for instance, to short story writing for the better class of magazines; but we believe that even at the present rate of pay many writers of established success would be enticed into the field provided their names could be signed to the stories as they appear on the screen.

This the Edison people are doing, at least with the foremost of their writers. One or two of the other companies have gone so far as to announce the author of a certain special production, as, for example, Selig's Justinian and Theodora by Elbert Hubbard. But the practice is so far from general as to make these isolated instances the exceptions to prove the usual rule of reticence.

We believe the Edison people will benefit much by the publicity given their authors. If practised generally it might lead to a higher rate of pay for scenarios, but we doubt it. And the recognition would surely attract better writers and consequently make for better films.

ENGLISH ENTERPRISE.

"I'VE been saving this till I got to the states," said D. J. Benger, the steamship man, who has just arrived from London. "Following the attack of the London police on the anarchists in a house in Whitechapel a few weeks ago, I saw moving pictures of the affair at the Alhambra that night, while at 5 o'clock in the afternoon pictures of the attack were shown at the Palace Music Hall. That," suggested Mr. Bender, with pardonable pride, "almost equaled your well-known American enterprise."

Some Kentucky Photoplay Houses

By G. D. Crain

ONE of the oldest–established and one of the most flourishing motion picture theaters in Louisville, Ky., may be found at Fourth avenue and Green street, in the heart of the retail business section. It is the Casino Theater, owned by the Princess Amusement Company. The Casino is one of the first "really and truly" picture houses in Louisville, in that it occupies a building that was remodeled for picture show purposes and was not the outgrowth of a vaudeville theater. When the Princess management opened up the Casino, it was announced that the little picture playhouse would be an auditorium in miniature, with leather padded opera chairs to supplant the usual hardwood seats in pseudo picture theaters that then existed, and the aisles to be arranged in true theatrical form.

The Casino when it opened was the largest house of its kind in the city, and now ranks well among the foremost in seating capacity, having kept pace extremely well with the enormous growth of picture interests within the past ten years. It fronts for 33½ feet on Fourth avenue and extends back for 125 feet to an alley, thus providing a "tube" theater that has entrance and and egress on both the public thoroughfare and a private alleyway. The theater is on the ground floor of an old office building, but its exterior makes a very handsome appearance, with a proscenium arch 18 feet in height spanning the 33-foot entrance. The arch as well as the lobby of the Casino is handsomely and artistically decorated with plastic bas-reliefs.

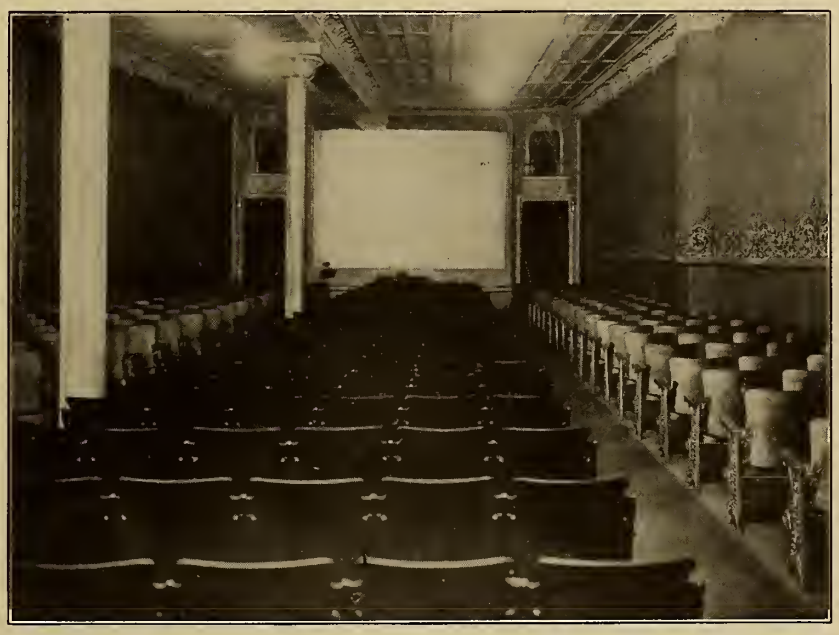

Interior of the Casino Theater, Louisville.

The interior of the lobby is studded with four hundred 60-candle power tungstens, while three electric arcs depend from the ceiling, furnishing an ample volume of illumination for the exterior. Two easels and two wall programme announcers are employed, and the entrance arch is surmounted by a big electric sign that swings over the sidewalk, formed of nearly two hundred tungsten bulbs, proclaiming "Casino" in blazing letters that may be seen from quite a distance, even in the down-town region, which is thickly populated with electric signs.

Two sets of swinging doors, on either side of the box office, afford two street entrances and two street exits for the Casino, while the interior provides two more exits in the rear. The admission price is 10 cents for adults and 5 cents for children.

Upon entering one finds himself in a genuine theater, affording seating facilities for nearly 500 persons. The handsome leather padded opera chairs are ranged in straight rows, subdivided by two aisles from front to back and one aisle across the center of the house. The floor deadens the sound of walking, as it is covered with a layer of quilting surmounted by heavy lineoleum. From back to front of the Casino auditorium there is a 4½ foot drop, which affords an excellent view of the picture screen from any seat within the 125-foot length of the house.

Just above the box-office in the Casino there is a comparatively spacious operating room, 10 by 6 feet in dimensions, equipped with two Powers machines that have 85-foot throw. The operating room is fireproof in construction throughout, and special provisions have been made by the Princess concern for fireproof equipment, such as racks for films, etc., in the interior of the compartment.

The interior of the Casino is handsomely finished with plastic relief work, the general color scheme employed being various shades of terra cotta. A row of incandescents and three powerful dome lights in the ceiling combine to produce excellent interior illumination while the picture exhibitions are not in progress. The air inside the Casino is always fresh and pure and of the correct temperature to suit normal human requirements. In the ventilating system two forty-inch exhaust fans, together with fourteen blow fans, are employed, while an Excelsior system of hot water heating supplies the required warmth. During the summer eighteen 24-inch electric fans circulate a current of cool air through the auditorium during the working-day of the theater.

Each exhibition at the Casino consists of three reels of first-run licensed films and one illustrated song. An orchestra of four instruments supplies unusually enjoyable music and sound effects are brought into play continually to enhance the realism. The Casino manages to run about ten shows of one hour's duration each day, and the theater is operated by a staff of eighteen employes, each of whom is an expert in his line.

In the negro district of Louisville, on West Walnut street, there are two good-sized moving picture theaters, both of which put up an excellent appearance and which are as unique in the class of their clientel as they are in nomenclature. The Houston, at 914 West Walnut street, and the Lyre, formerly called the Taft, at Thirteenth and Walnut streets, are distincly theaters of the colored race, to have and to hold as long as the negro settlement along Walnut street in Louisville continues to contain its present large population.

Both houses are owned and managed by colored motion picture "magnates," and the attaches of the West Walnut street amusement resorts are indistinguishable in shady coloring from the hosts of pleasure seekers that throng throughout the evening and night of every day of the week to the shows, forming an extensive and remunerative aggregation of patrons for any exhibition.

The Houston is somewhat more pretentious than is the Lyre, inasmuch as it fronts some little distance back from the property line along Walnut street, occupying what was formerly a dance-hall. The building is now painted white with liberal incandescent ornamentation on both exterior and interior, and a big electric sign proclaiming "Houston" swings out over the sidewalk in front of the theater. The establishment of the Houston marked a distinct movement toward the betterment of the colored residents of West Walnut street socially and morally. The theater supplanted a dance-hall of shady reputation, and is now operating full blast every night with pictures of undeniable educational as well as amusement value.

Alfred Houston, one of the leading citizens of his race in Louisville, is owner of the Houston theater. He is introducing a bill composed of both vaudeville and film attractions, in view of the fact that the colored patrons are apt to become restless and discontented with displays of films alone, which serve to amuse for a time without having the prestige that is necessary to win and retain a large patronage for a colored amusement house.

Two or three films of interest, either dramatic or comic, are run off at each performance, while the remainder of the bill is composed of startlingly noisy but altogether mirth-provoking stunts of various colored players. The stunts are prepared and staged by home talent, and it has been found that but little financial remuneration is necessary to induce a quartet or duo of vocalists or singers (for practically all negroes are possessed of musical talent) to assume the honor and glory of appearing *en stage* before admiring audiences of their fellows.

The Lyre Theater is owned by Julius J. Seals, another leader in the ranks of Senegambian Louisville. The Lyre is modeled decidedly after the small theaters of the down-town sections in large cities. It occupies about eighteen feet frontage on Walnut street, and is ornamented on the exterior with plastic relief and a number of electric lights. An electric sign also adds materially to exterior ornamentation of the house.

Both the Houston and Lyre charge a uniform price of 10 cents for adults and 5 cents for children, children barred on Sunday nights to make additional place for the more remunerative patronage; and observation, as well as authentic reports, shows that the two negro motion picture theaters of Louisville are "holding 'em out" throughout every minute of the shows' continuance.

Motion Picture Insurrection

A Mexican insurrection on a small scale, brief but interesting while it lasted, took place recently in Galveston, Texas. The principal belligerent was a fiery son of the land across the Rio Grande, who took exceptions to the theme of a picture that was being run at one of the moving picture shows, the principal character of which show was a "bad Mexican," who finally was strung up in approved Texas border style by a band of brave-hearted cow punchers.

The Mexican witnessed the show for a time until his patriotic feelings began to get the better of him, and then he made a break for the projecting machine, intending to stop proceedings. A husky operator deterred him from his attempt, so going to the outside he did the next thing that he could by removing the sign advertising the picture and putting it inside the house, calmly lighted a cigarette and stood guard, defying the ushers and the door man to put it back.

When arrested the Mexican showed fight, necessitating the use of force by the officers, all of which caused more excitement, and by the time the officers had reached the station with their prisoner there were several hundred people on hand. The trouble over the incident proved such a drawing card for the picture that the house was packed for the remainder of the afternoon.

Church Competes with Picture Shows

The First Congregational Church of Toledo, Ohio, will enter into competition with the theaters and moving picture shows for the patronage of some of the pleasure seekers whom Dr. Wallace, the pastor, on a recent Sunday night tour of inspection, saw pouring by thousands into the pleasure places of the city while many of the preachers were holding forth to rows of empty pews.

"Personally, I am tired of speaking every Sunday night to a few men and women and many empty pews," said Dr. Wallace. "Recently while my pulpit was filled by a friend, I made a trip through the city one Sunday night and looked into a number of the down town churches—they were practically empty. Then I stood outside of the theaters and pleasure places of the city and saw the people flocking there by the thousands. If the people must have pictures and shows, we will give them one at the old First church." The motion picture service will be given every Sunday night.

Government Takes Scenic Films

Advices from Washington state that recent pictures taken of the Grand canon of the Arkansas, the Royal Gorge and the skyline drive by W. J. Lubken of the United States reclamation service and George L. Beam, official photographer of the Rio Grande railroad, were highly satisfactory.

The films, measuring 2,100 feet, are said to be the first moving pictures taken by the reclamation service in showing the progress of the west. These pictures will be displayed by C. J. Blanchard, statistician of the reclamation service, for the information of members in congress and for a series of lectures in eastern cities. Later they will be loaned to Lyman J. Howe for exhibition in various parts of the country.

The Denver and Rio Grande Railroad company contemplates securing duplicates of the films and may use them as a first experiment of a railroad company with this method of advertising.

New Amusement Patents

By David S. Hulfish

It will be the purpose of this department to list all United States patents, as they are issued, which pertain to any form of amusement business, giving such data in each case as will enable the reader to judge whether he wishes to see the complete darwings and specifications of th patent. When patents of special interest to The Nickelodeon readers are encountered, the descriptive matter herein will be amplified accordingly. A complete copy of drawings, specifications and claims of any patent listed will be furnished from this office upon receipt of ten cents.

No. 970,912. Self-Locking Ticket Window Closure. Mr. John W. Gamble, Burlington, Iowa. The device of this patent is very simple, but offers a convenience for the cashier in cold or windy weather.

The invention may be understood by the illustration, which shows the shelf and glass window of the cashier's booth, with the ticket window gate installed for service. The glass of the window is shown at 1 in the illustration, and upon this is clamped the metal plate 2 by means of the bolts 4.

When the little shelf 11 is up, as shown in the solid lines of the illustration, the large opening 6 is available for the sale of tickets, but when the little shelf 11 is drawn down, as shown by the dotted lines upon the shelf at the opening 6, the opening 6 is ob-

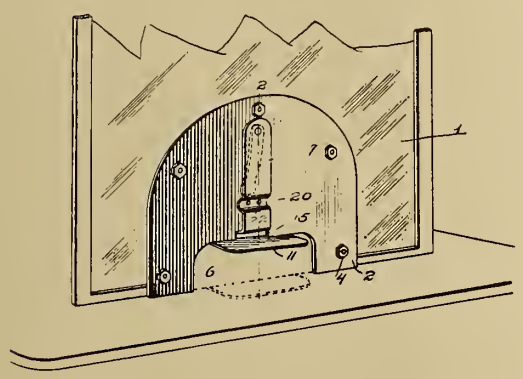

970,912.

structed, both against inclement weather and against the hand of a bystander attempting to reach through the wicket.

The shelf 11 and its attached parts are held up by a spring when it is not locked down, a latch being provided for locking it when drawn down.

No. 970,913. Screen for Motion Pictures. Mario Ganzini, Milan, Italy.

In these days when mirror screen and daylight projection are both live subjects, widely advertised and widely talked of, a patent for an improvement in the screen upon which the picture is to be projected is one of interest as wide as that of mirrors and lighted theaters.

In brief, Mr. Ganzini makes a screen surface such that stray light at an angle will not light the surface of the screen, while the light projected straight upon the screen by the projecting lantern will light up the screen and the picture thus projected will not be injured by accidental sidelights or by auditorium lighting which reaches the screen at an angle.

This effect is obtained by forming the surface of the screen into small pits of which the sides, catching the diagonal light rays, are dark and do not reflect, while the bottoms, catching the direct rays from the lantern, are white and reflect the light of the picture. The audience views the screen from the front, the walls of the pits being thin and therefore not being seen.

The full descriptive text of the patent, and its claims are as follows, all of the figures of drawings being reproduced herewith also:

A lattice is fixed to the screen and its meshes which may be of any desired form such as rhomboid circular and so forth are sufficiently close together and sufficiently raised to form cavities the walls of which are preferably of a dark color and project upon the plane of the screen shadows which cover the entire surface of the screen. In these conditions the influence of a foreign source of light is destroyed

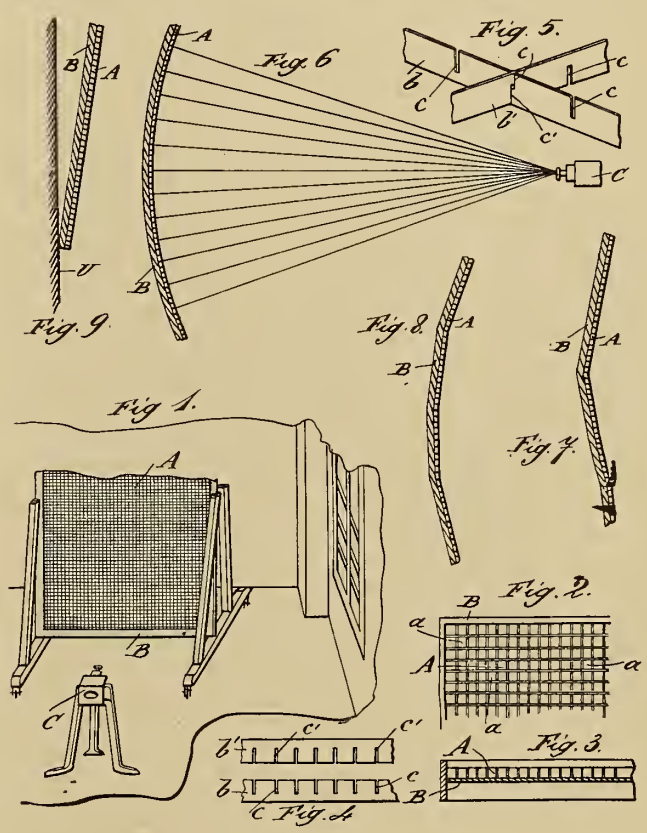

970,913.

and the projections may be formed in a bright light as well as in darkness.

In the accompanying drawings: Figure 1 is a perspective view of the kinematographic plant embodying the present invention. Fig. 2 is a front view of the lattice. Fig. 3 is a horizontal section of Fig. 2. Fig. 4 is one construction of the strips which may be used for forming the meshes of the lattice. Fig. 5 is a perspective view showing how two of such strips may be connected together. Fig. 6 is a plan of a plant in which the screen is arranged along a circular curve. Figs. 7 and 8 illustrate screens arranged along broken lines. Fig. 9 is a vertical section of a plant in which the screen is arranged at a slight inclination.

In all of the figures shown C is the projection apparatus and B the screen.

A is the lattice and *a* the meshes thereof. These meshes are for instance obtained by means of paper strips *b b'* provided with deep cuts *c c'* at regular intervals, these strips being set at an angle of 90° to each other (that is, the strips

b disposed at right angles to the strips *b'*), the slots *c* of the strip *b* embracing the width of the strip *b'* which has remained uncut, thus causing the strip *b'* to override the strip *b* (as shown in Fig. 5).

It is understood, however, that the above forms of construction are given by way of example only, as the form of the meshes as well as the material of the lattice may vary, the only condition having to be fulfilled being that the recessed lattice should always adhere to the surface or surfaces constituting the screen.

In order to place all the spectators as nearly as possible in the same conditions as regards the visibility of the pictures it is advantageous to replace the ordinary screen arranged in a single plane perpendicular to a horizontal normal passing through the source of light by screens arranged along a broken line (see Figs. 7 and 8) or a circular curve (Fig. 6), the source of light being situated at the center of the polygon or of the circle the outline of which the screen follows. It is sometimes advantageous to arrange the screen B (Fig. 8) at a slight inclination relatively to the vertical planes (U Fig. 9) of the adjacent walls.

Claim 1. An opaque screen, for displaying projected pictures in a lighted place, having a lattice, consisting of a net work of walls, connected directly to its surface.

Claim 2. An opaque screen, for displaying projected pictures in a lighted place, having a lattice, consisting of a net work of walls, connected directly to its surface, said walls being perpendicular to said screen.

Education by Cinematograph

Abstracted from The Bioscope

THERE are still many people who are insufficiently abreast of modern thoughts and doings to be able to appreciate the educational value of the most marvelous of modern inventions—the cinematograph; but there are distinct indications that public opinion is being aroused in favor of this most lucid of teachers. Meanwhile we must persistently educate the public—educate them by means of scientific films in the picture theaters—until they realize that in the same way that they have been "educated by cinematograph" in a place of amusement, so can their children be educated in the schools and colleges and hospitals.

There can be no doubt that humanity has benefited more by the activities of the medical class than by any other section of the community. It is, therefore, peculiarly gratifying to find that the cinematograph has been able to take an active part in aiding the efforts of those men to whom we are all so much indebted. A short time ago there were described some films obtained by Drs. Kastle, Reider and Rosenthal, of Munich, which showed the action of the stomach while food was undergoing the process of digestion. These pictures were produced by submitting the lower portion of the thoracic cavity to the action of Röntgen rays, and filming the pictures thus projected on a fluorescent screen. Up to the time that this film was taken, certain views were generally accepted by medical men as to the nature of the motion that the ingested food was submitted to during the period it was being mixed with the gastric juices. The cinematograph demonstrated, however, that in many respects these views were imperfect, and it is believed that in the future the results thus obtained will be of great value in the diagnosis of diseases connected with the alimentary canal.

From the filming of the stomach under the Röntgen rays, scientists then passed to the study of the movements of the heart; and at the eighty-first annual meeting of the German Association for the Advancement of Medicine and Natural Science such results were exhibited, creating intense interest on all sides. These films were produced in accordance with the methods introduced by P. H. Eykmann-Scheveninben and Engineer Dessauer, of the Veifa Works in Aschaffenburg. Each picture received only 1/100 of a second exposure, on a special emulsion prepared in the laboratories of Dr. C. Schleussner.

Professor Doyen, of Paris, was the first to introduce the cinematograph into surgery, and suffered from the fate which has awaited so many men of science—namely, that of being ahead of his time, and consequently unappreciated. Professor Doyen performed his operation in private, a powerful light being at the same time thrown upon the patient's body and a film taken. Next day he gave a lecture, at which the film was projected and every detail of the operation explained fully. At these lectures serious rioting took place, so that the police had to be called in, and it became impossible to give them in the hospital theater. But Professor Doyen was not to be beaten, and he therefore gave his lectures in a private theater, which was soon filled by a deeply interested audience. The advantages gained by the patients, surgeons and students alike were demonstrated to the full, and Professor Doyen has had the satisfaction of seeing his methods appreciated by his students as well as by the public at large.

The moving picture as an educational agency in combating the spread of tuberculosis was pressed into service for the first time on December 16 last year, when films showing how the disease is bred in tenements and how it is fought, were exhibited simultaneously on screens in no less than 7,000 theaters throughout the United States. The pictures, which were arranged for by the American National Association for the Study and Prevention of Tuberculosis, and the American National Red Cross, were produced by the Edison Manufacturing Company, and are remarkably clear and distinct. The photographs, for the most part, showed the interiors and exteriors of tenements in New York, and the most explanatory remarks thrown on the screen indicated the manner in which tuberculosis germs were hatched and spread. One screen pictured a nurse going about in a filthy back yard cleansing and purifying the place so as to prevent infection. A particularly interesting part was that showing the Vanderbilt Clinic, on the top of the College of Physicians and Surgeons, at Fifty-ninth street and Tenth avenue. The doctors are shown caring for the patients there under the modern system of treatment.

In co-operation with the New York Milk Committee, the Edison Company has also obtained some very instructive films dealing with the milk supply of the city. The old-fashioned dairy methods, so deadly in their effect on infants, are vigorously exposed. Then the scene changes, and one witnesses the newer and more hygienic methods which are so rapidly being

adopted throughout the world. The milking, for instance, is all done by white-suited men, whose hands have been carefully inspected, and the cows are sprayed, cleaned with vacuum cleaners, brushed and washed before the milking. The milk is never handled at all, but after being poured into the cans, is sent on a trolley across to the strainer. From there it goes to the cooling machine, and is bottled by another ingenious machine, which puts the caps on without the touch of a human hand. Even the bottles are cleaned and sterilized by machinery; everything is white and clean and sanitary.

From what has been written above it is obvious, even to the most biased opponent of moving pictures, that much real good work can be accomplished for humanity in what may be termed a mild sort of way, without in any way offending the susceptibilities of the most sensitive mind; and, at the same time, bringing home to them the existence of many grave evils and the simple manner in which they can be prevented.

Readers will appreciate the great importance which is attached to the study of the blood cells and of all bodies which are likely to affect them strongly.

Among the films recently produced by Messrs. Pathé Frères dealing with these subjects may be mentioned those showing the circulation of the blood in man and other animals. We can see the amœboid action of a white cell, the action of water on blood, and its agglutination. In the last-named phenomenon, the red cells, on losing their vitality, shrink together to form rouleaux, something like a lot of coins piled on one another. In another film we are shown the action of the parasite *Trypanosome Brucii,* the cause of sleeping sickness, or disease very deadly among the inhabitants of West Africa, and spread by the tsetse-fiy (also shown). Blood taken from a healthy mouse is first exhibited, and then that from an animal which has been inoculated with the virus of the disease. Two days then elapse, and we now perceive in the blood cells a considerable number of snake-like forms, bending and curling in all directions, and making vigorous attacks on the phagocytes. We see the phagocytes grasping them and trying to suck them in, sometimes successfully, mostly not; another day passes, and the parasites have greatly increased in numbers, and on the fourth day the enemy has entirely got the upper hand.

Messrs. Pathé have produced films showing the action of the germs causing relapsing fever (*Spirochaete Obermeirerii*), which prevails chiefly in cities of Russia, and is believed to be introduced into the system by the aid of bugs, and also the *spirochaete* of Vincent, and those of Pallida. The former of these is found in certain ulcers, and even round healthy teeth. The latter cause one of the most terrible diseases known. This germ is one of the thinnest *spirochaete* every discovered, having a breadth of less than half a thousandth of a millimeter.

A boy or girl of twelve wants to know what a country looks like, what sort of people live in it, and the manners and customs they have. The exact height of a mountain or length of a river is not a matter of vital importance to a child of that age; it is quite sufficient to know that the mountain is a high one, or that the river is long, with important cities on its banks.

What the child misses in his book is the absence of reality; descriptions alone are but dry bones, but the cinematograph puts flesh upon them and breathes into them the spirit of life. There is not a portion of this globe, from the polar regions of everlasting ice to the burning plains of equatorial Africa, that has not been visited by the cinematographer. For him no labor has been too great, he has explored the Amazon and the Nile—he has toiled up to most inaccessible peaks of the great mountain chains, and tracked the most ferocious of wild animals to their lairs in the jungle. There is no city of importance where he has not been with his camera, no public event of recent years at which he has not been present.

In fact, one might say his chief difficulty now is to find places of beauty and interest for the benefit of those whose means, age or time prevents them seeing in person so much that is worthy of admiration in our own and other lands. Right here, then, lies the explanation of the undeniable fact that the child who loaths his geography lesson (from a book) will, after visiting a picture theater, come home with his little face beaming with pleasure and delight, obtained from what is, after all, simply a geography lesson upon the screen. Surely this is serious food for reflection for everyone concerned in the instruction of the young.

The number of films of natural history subjects that have been produced during the past few years is prodigious, and it is therefore impossible to enumerate a thousandth part of them within the scope of this article. It is necessary, however, to give some idea of the class of films that can be obtained and used in schools and colleges for the purpose of imparting a thorough knowledge of the chosen subject. For instance, the Lion Hunting films which Mr. Cherry Kearton obtained last summer in British East Africa are unique in their way, for not only do they vividly illustrate the life of the monarchs of the Tropics in their natural surroundings, but the film also illustrates in an incomparable manner the general contour of the country and the plant life with which it abounds. There are, of course, many other films which illustrate the life and habits of wild animals, and that mentioned above is cited simply as an example. For those who desire a larger variety of animals in a comparatively short length of film, there is, amongst others, a very fine series of pictures which were taken at the Zoological Gardens, Rome, for the Cines Company.

Then there are the birds, of whose characteristics comparatively little was known before the advent of the moving picture; but now, thanks to Pathé Frères, Williamson, and others (in conjunction with telephoto lens and concealed cameras), the inmost secrets of the lives of many rare specimens have been unmasked. Rare eagles, perched upon inaccessible rocks, are brought so close to the observer that he must often be tempted to stretch forth his hand to touch them; whilst sea birds, clustering on the cliffs, no longer rear their young in secrecy.

'Tis but a step from birds to insects, and once again the living picture triumphs. The many films of these elusive creatures which have been placed upon the market by the Charles Urban Trading Company are too well known to need description here, ranging as they do from moths to millepedes, and from beetles to butterflies. Pathé and Williamson have also contributed in this direction, and only the other day, in the course of a conversation with Mr. Arthur S. Newman, who is well known as a contributor to the *Bioscope,* I learned that he has just taken (in conjunction with Mr. F. Enock, the noted lecturer), a film

which will be entitled "How Insects Walk!" Imagine the delight of the small boy who collects caterpillars, when he sees one of his favorite specimens enlarged upon the screen until it is fifteen or twenty feet in length! Right there, my readers, you have Education by Cinematograph, for will not the boy then be able to minutely examine that caterpillar, the number of its legs, their position, size and shape, and the texture of its skin enlarged many thousands of times? More important still, he can see how a caterpillar walks, and if that is not education, well what is?

The skeptical reader may well interpose at this juncture with the remark that it is possible to see *something* of the lives and habits of birds, animals and insects without paying a visit to a picture theater, but he inquries, "What about the fishes?" To that question I would reply that at the Brighton Aquarium there exists the finest collection of fish, in captivity, in the world—fish from the tropics, the Arctic regions, and the temperate zone. Would my skeptical friend be interested to know that a film of these denizens of the deep has been secured, and that he can see *live* lobsters, dog fish, alligators, skate and cuttle fish upon the screen in the north of Scotland or the center of China?

Education by Cinematograph, my friend.

Memphis Authority Employs Motion Pictures

As a means of instructing the pupils of the city schools in the science of warding off diseases and unsanitary conditions, Dr. M. Goltman, superintendent of the Memphis health department, is contemplating the purchase of a moving picture machine.

Several powerful health warnings were issued last summer through the aid of a cinematograph, and the lessons were learned so well that the head of the health department believes it should be popularized with the rising generation.

The health superintendent will arrange the moving picture lectures so the machine can be taken from school to school in a systematic manner. With it will go an operator who is competent to speak advisedly upon every subject presented. The subjects will include the development of the fly, the development of various germs, and everything of sanitary and unsanitary character which a student in the public school will be able to comprehend.

The cinematograph will also be used in demonstrations of a more public nature and prepared particularly for the benefit of adults.

A Minister's Verdict

"Having had the privilege of sitting with the National Board of Censorship for one day of their labors, the writer can testify that their work is done with a serious consciousness of the hundreds of thousands of people whose moral outlook and views of life are to be unwittingly and yet really influenced by their quiet verdict written upon a slip of paper. A session of this committee, once the imagination travels out in space and time and reckons with consequences, becomes one of the most solemn experiences a person can have. Its verdict is absolute, moreover, and though sometimes its rejection of a film means the loss of thousands of dollars of initial expense to the maker, there has not yet been any revolt against its verdicts. Far more hindrance has come to the work of the censorship from earnest, but not always the most catholic-minded men and women of piety who would impose an impossible standard of refinement and conventional morality upon this mode of popular entertainment. They forget that Mulberry Bend wants something more highly seasoned than Anthony Trollope—that Mott street and Hester street for the most part scorn the church and its prayer meetings. The work of the censorship should not be so much condemned for its falling short of a perfect standard as gratefully approved for its monumental achievement, judged by what went before. The low vaudeville which has been superseded to so great an extent by the photoplay ought to be still further eliminated. This will not be as easy a task as it was to purify the motion picture of French suggestiveness and American morbidness, for the vaudeville cannot be disinfected at its source as is possible with the picture drama, the latter being altogether manufactured and distributed from New York City. But there is no doubt in the minds of many that sooner or later, the better elements of a community will have to supervise all popular entertainment, and indeed most of the recreation of the poor. Only thus can the highest welfare of society be secured. And when this supervision is organized, the kind of popular novel to be allowed in the public library will be defined better than it is now. In many a home of supposedly careful parents the perils from the books which the mother and children read are vastly greater than the imagined perils of the motion picture."—(From "The Religious Possibilities of the Motion Picture," by Rev. Herbert A. Jump.)

Pictures in Chicago Schools

The popularity of the motion pictures in educational work has again been attested through the adoption by the Board of Education of the City of Chicago of a motion picture equipment to be used in the nine school centers under the direction of Prof. Voorhies. The first entertainment of this nature which the school board will offer to the children and parents will be given this week in the Fallon school, at Wallace and 42nd street.

The Board of Education looked into the matter of selecting an outfit with the utmost care, having appointed a special committee under the direction of Mr. J. D. Shoop, superintendent of schools, and they finally adopted the Motiograph motion picture machine as being excellently adapted to their work and the machine on which the committee decided unanimously.

Showboat Men Hard Pressed

The latest howl to arise over the competition set by motion pictures comes from the showboat men of the Mississippi River. They claim that motion picture theaters are invading the river towns and driving them out of business. The showboat is a kind of steamboat fitted up for theatrical purposes, which plies up and down the Mississippi, stopping at all little towns and giving shows. It has long formed one of the most picturesque institutions of that picturesque region. But now the little towns that heretofore could not support a real opera house, can afford a nickel theater, and they seem to prefer motion pictures to the old-time river show. Consequently showboat men have joined the anvil chorus composed of disgruntled melodrama purveyors, burlesque-house owners, barnstorming actors, ministers of the gospel, lyceum bureaus, et al, all of whom have suffered a loss of business under the encroachments of the popular motion picture.

A Talking Picture Demonstration

Translated from L'Illustration

FOR a dozen years a number of inventors in Europe and America have been trying to achieve a perfect synchronization of the biograph and the graphophone so as to give speech to the figures that move across the picture. The problem appears to have been solved at last and solved by a Frenchman. At a meeting of the Academy of Sciences the other day we had a surprise by the new Gaumont apparatus, which caused Professor d'Arsonval to appear upon the screen, while the professor himself sat among the spectators, hearing and seeing himself speak.

The problem has long presented such difficulties that even the Americans had little confidence in Edison's researches. Recently, however, the distinguished inventor invited several newspaper men to his laboratory and showed them some things that astonished them.

Said the Tribune's representative:

"During the past fifteen years Mr. Edison has repeatedly attempted to realize his day dream; over and over again he has been disappointed. He has pitched in again and shown his results; but he has thought it necessary to make excuses for these primitive disclosures, and has announced that he could predict no conclusive success for the immediate future.

"To reach the desired result, as he explains, the inventor must overcome two difficulties. First, he must so improve the graphophone that it will faithfully reproduce the quality of the voice. Next he must find an extremely accurate device for making the graphophone and the biograph keep time.

"In our opinion, it is still to be demonstrated that marked progress has been made in this direction. There is an old story that fits the case admirably. After the Emperor Charles V's abdication, he amused himself by trying to make three clocks keep the same time. When he failed he exclaimed, 'What a fool I was to attempt to make the various races of my empire pull together when I can't even make three stupid clocks do it!'"

Our confrère adds, slyly, "Mr. Edison may occupy his declining years trying to realize his ideal of the coördination of the two inventions; if he fails he will at least have discovered a very harmless pastime."

You see what are the fundamental elements of the problems of which the Tribune calls insoluble. They are three—all of which M. Gaumont has assailed successfully:

1. The absolute synchronism of the projector and the graphophone.
2. The registering of sounds at a sufficient distance to catch sounds by means of the graphophone at the exact moment when the corresponding pictures are caught by the camera.
3. The amplification of the sounds.

The synchronism was comparatively easy to obtain.

When the two machines are separated by a great distance, especially if the two are moved by different forces, complete synchronism is practically impossible. There is always a slight disparity of speed, which has to be corrected. Professor Korn encountered a similar difficulty in his work in telephotography, and had to overcome it.

Here the case is simpler, for the dynamos that drive the projecting machine and the graphophone are linked to the same current.

Several difficulties remained, nevertheless. The need of placing the motion picture apparatus near the screen to reproduce pictures taken at longer range complicates matters. Moreover, the graphophone must work at a speed always equal to that of the sounds it reproduces or it will fail to reproduce them properly. So the speed of the biograph had to be regulated by that of the graphophone.

By a special system of connections M. Gaumont succeeded in giving exactly the same speed to the two machines, and an electric charge set them going simultaneously. If an accidental disparity occurred, a touch of the hand was enough to readjust the film and make it correspond with its mate, the hard rubber disc.

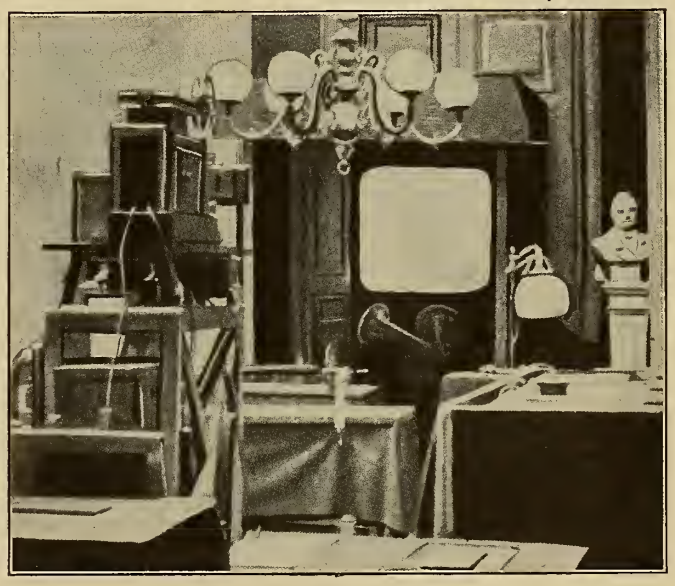

Arrangement for Gaumont Talking Pictures.

At first it seemed necessary to run the two machines at different speeds, so as to allow for the difference between the speed of light (80 kilometers a second) and the speed of sound (only 340 metres a second). At a distance of ten metres, the movements of the lips are registered on the film at the moment they occur, but the sound of the voice would reach the graphophone one thirty-fourth of a second later. Theoretically, when both movement and sound were reproduced, the sound would always be a little behind the movement. To remedy this, it would suffice to start the graphophone one thirty-fourth of a second ahead of the biograph. But in practice the difference is negligible at short distances, and the fault is not noticed.

As a rule the biograph camera takes sixteen pictures a second. Between two pictures it does nothing. The membrane of the graphophone, on the contrary, vibrates without other interruption than the gap be-

tween two sound-waves. So that it must be admitted, within certain limitations, that sound reaches the graphophone while the biograph is not working. And as the illusion afforded us by the biograph is due to "persistence of vision"—the lingering of impressions on the retina—this explains the sensation we have of hearing the words at the same time with the movements that accompany them. Here, as in real life, we are victims of a trick (call it a favor, if you like) performed by the senses. Who ever realizes at the theater that he hears a syllable only as the actor is pronouncing the following syllable?

The registering of sounds at a distance was harder to accomplish than synchronism. Hitherto the membranes that formed an essential part of the graphophone had given very unsatisfactory results. The sound of an orchestra could be recorded at a distance of several yards, but a voice could not be recorded unless it came within a foot and a half of the instrument. And the apparatus gave forth only fifty per cent of the sound it received.

Let us notice in passing that the graphophone is not to be compared to the theatrophone. This latter, like the telephone, is composed of a microphone—that is to say, a vibrating plate, whose very faint oscillations affect an electrical apparatus. The current produces similar oscillations afar off, and these produce sound waves so attenuated that it is necessary to press the ear close to the receiver.

In the graphophone, on the contrary, the vibrations of the registering membrane must move a needle against the disc, and do it by mechanical force greater than mere electrical contact. And the speaking membrane must give forth the sound with all its breadth and strength by means of these vibrations.

Owing to the impossibility of registering sounds at a distance, the graphophone had to be placed between the biograph camera and the subject, and so it was impossible to obtain the desired result.

M. Gaumont, who had solved the problem of synchronism in 1903, next turned his attention to this more baffling problem and solved it in an exceedingly ingenious way.

First he recorded the voice. He then made the graphophone talk behind the biograph camera, which took successive pictures while the singer repeated his song and gestures. After this all that remained was to synchronize the two pieces of apparatus.

Some fairly good results were obtained in this way, but the process was extremely delicate and too often failed to work. In any case, it could be applied only to singing and only to the singing of songs that had a certain tempo; for you will appreciate the difficulty an actor would have if he tried to repeat a speech in starting exactly at the required instant and in speaking at exactly the required speed.

It was the more difficult to remedy such imperfections because the construction of these instruments was still purely empirical; thus far nobody had been able to explain how they worked.

After trying various kinds of membrane and after abandoning metal because of its detestable sound, the makers used mica in default of a better substance. In taking records parchment was preferred.

Moreover, the amplification of the sounds was at first obtained by using the familiar trumpet; this was later improved upon by adding sounding boards. Before long compressed air was adopted; directed against the membrane it strengthened the vibrations. But it is clear that M. Gaumont has advanced further, though he keeps his secret. While he refuses to patent it, he has embodied it in a sealed report to the Academy of Sciences so as to make sure of what distinction falls to the priority of his achievement.

The results secured are astonishing. After the official communication addressed to the Academy of Sciences by M. Carpentier, M. Gaumont's teacher, we saw M. d'Arsonval appear upon the screen. The perfection of the likeness gave added emphasis to the absolute concord of gestures and lip-movements with the speech wonderfully reproduced by the graphophone. A moment more and the illustrious Academician was replaced by a crowing rooster.

These talking pictures gave an impression of amazing life, which will be complete when—ere long, no doubt—color is added.

At present M. Gaumont's chronophone records gesture and voice at several yards' distance; consequently it is now possible to collect talking motion-pictures that will enable posterity to see and hear the great men of our day almost as well as we do. What still remains to be desired is a new step in the progress of the graphophone that will yield more purity and mellowness in the reproduction of the voice.

And while we cannot deny Edison the honor of having invented the graphophone and the first biograph, we have the right to regard the talking biographic as dictinctively French. The first successful projection of moving pictures on a screen was achieved by the Lumières; and M. Gaumont, after ten years of research, now gives us that synchronism of the graphophone and the biograph which Edison has been seeking for fifteen years.

The Motion Picture Sermon

"The crowning possibility of the motion picture is its usefulness to the preacher as he proclaims moral truth. It will provide the element of illustration for his discourse far better than it can be provided by the spoken word. It will make his gospel vivid, pictorial, dramatic, and above all, interesting. The motion picture preacher will have crowded congregations, not because he is sensational, but because he is appealing to human nature more successfully than his fellow-clergymen, because he is adapting his message to the psychology of his hearers, because he is employing a better pedagogical method.

"Why do not men, especially the common people, want to go to church more than they do? Is it not in part because they feel that the preaching of today, at many points, fails to fit their natures and meet their needs? We ministers use too often a technical jargon which the outsider characterizes only as a pitter patter of dreary nonsense and a hodge-podge of unintelligible stupidity. They say of us what the little girl said of her pastor, 'He talks to himself out of a piece of paper.' If ministers as a whole were to return to Jesus' method of sermonizing, and with story and dramatic pictures drawn from contemporary experience were to illustrate a few simple ethical and spiritual realities, would not the constituency of the church become larger and more loyal?"—(From "The Religious Possibilities of the Motion Picture," by Rev. Herbert A. Jump.)

A Group of Eminent Scenario Writers

Sources of Edison Photoplays

A Group of Edison Scenario Authors.

BACK in August, 1909, the Edison Company approached Mark Twain with the proposition to collaborate with them in the filming of his immortal "The Prince and the Pauper." At first skeptical and reluctant, his consent was finally given,—with the stipulation, however, that the film should not be given to the public unless he were satisfied that the production had been staged in a manner worthy of the story.

The stipulation was gladly agreed to. Miss Cecil Spooner was specially engaged to enact the dual role of the young Prince of Wales and Tom Canty, the pauper boy, and her support included twenty-two well known actors, while in a number of scenes sixty-three "supes" were employed. Many different sets of scenery were used and each set was perfect, historically and architecturally, down to the minutest detail. That depicting the London Bridge was ninety-seven feet deep, the largest and most massive ever built for motion picture purposes, up to that time, at least. The costumes, properties, armor and trappings were also carefully selected for historical accuracy, beauty and impressiveness.

It was a superb production and the stipulation was more than fulfilled, and so pleased was the venerable author with the pictorial presentation of the famous story that he not only sanctioned the release of the film, but paid it the compliment of sitting for the frontispiece.

That event marked the opening of a new chapter in the history of the "silent drama." The complete success of the undertaking confirmed Mr. Horace G. Plimpton, manager of the Edison studio, in a conviction that he had entertained for some time, that the infinitely more satisfactory results to be obtained from the production of scenarios prepared by experienced dramatists and writers would more than justify the increase in negative expense that such a policy would entail. And thus was made another departure from "the beaten path," — thanks once more to Edison initiative.

Mr. Plimpton promptly set about enlisting the exclusive services of some of the most talented and popular of the country's authors, and that he succeeded pretty well in cornering the available market will be seen from a glance at the accompanying cut. The authors are all too well known to require introduction, with the possible exception of Mr. Thomas W. Hanshew, an American writer living in England, who has achieved a good deal of popularity on the other side of "the pond." Many of his stories have appeared in American magazines and have been well received. None have been filmed as yet, but the company is working on two of his best, which are due for early announcement. The

group will shortly be augmented by the addition of Mr. H. B. Marriott Watson, widely known as a successful novelist, on whose scenarios work will shortly be begun. Another contributor to Edison films is Miss Carolyn Wells, the well known author of the popular "Nonsense Anthology" and other light comedy works.

In addition to this staff of contributors the Edison company regularly employs other magazine and short story writers well known in the field of literature, both in this country and abroad, and therefore seldom finds it necessary to produce a film from the scenario of an inexperienced writer.

It will be seen from a glance at the list of films written by these authors that some of their best known stories have been used in Edison plays, and when it is considered that these stories have been read and reread by millions of admirers, some idea of the extent to which the motion picture business at large has profited by their association with it will be formed. The elevating influence of their names has had its effect upon the popular attitude toward motion pictures, and has been the means of attracting the patronage and good-will of a more consistent, more profitable and in every way more desirable class of amusement lovers in every community.

The following is a list to date of the films for which scenarios were written by the authors appearing in the the cut. It is to be deplored that the untimely death of O. Henry has robbed the Edison company of his active assistance in the filming of his many delightful stories, but exclusive access to his works is theirs, and knowing the ability of the Edison producers to retain in its pictorial presentation the original flavor of a story, exhibitors of Edison films may rest assured that many a treat is in store for their patrons in future productions from the works of this popular writer.

O. Henry—"The Ransom of Red Chief."

Ellis Parker Butler—"Pigs Is Pigs."

John Luther Long—"The Captain's Bride."

Richard Harding Davis—"Ranson's Folly"; "Her First Appearance"; "Gallagher"; "The Winning of Miss Langdon"; "The Romance of Hefty Burke"; "A Delightful Evening."

Rex Beach—"Pardners"; "The Mule Driver and the Garrulous Mute"; "The Shyness of Shorty"; "Out of the Night"; "With Bridges Burned"; "Arms and the Woman"; "With Interest to Date."

Roy Norton—"His First Valentine"; "Sandy, the Substitute"; "His New Family"; "The Great Secret"; "His Breach of Discipline"; "The Adoption."

E. W. Townsend ("Chimmie Fadden")—"Little Sister"; "Their Social Education"; "A Rose of the Tenderloin"; "A Victim of Bridge"; "The Suit Case Mystery"; "The Senator and the Suffragettes"; "Carminella"; "The Piece of Lace"; "The Valet's Vindication."

Current Saving Devices

In a talk before the Chicago Electric Club on the subject of "Current Saving Devices," A. J. Francis said:

"In a class of business which has developed very rapidly during the last three years, we find that because of the fact that it did not take skilled electrical men to operate the business the central station allowed the customer to use a decidedly wasteful current consuming device until he found out his mistake from outside sources. I refer to the picture machines in motion picture theaters. In all of these places the light source is an open arc, which on alternating current operates most successfully at approximately 35 volts. The average current required is 40 amperes. The energy consumption is therefore approximately 1,400 watts. The current is generally supplied at 110 volts, sometimes as high as 220 volts, and the voltage is cut down to 35 by means of a resistance box or rheostat in the circuit. Thousands of rheostats have been placed in service, but during the last two years there have been current saving devices for this special application put on the market which are not only of value to the customer, but also of value to the central station man, in spite of the fact that his revenue is decreased. We know that there is still widespread prejudice against electrical devices on account of the reports of fires being caused by electricity, and we know that a rheostat which must dissipate continuously approximately 3,000 watts must dispose of considerable heat. A number of fires have been caused by rheostats used for this purpose. It therefore goes without saying that in any community where the fire risk is lessened, due to the use of improved electrical devices, the central station supplying energy to this community is the gainer, even at the sacrifice of reduced revenue, due to the greater confidence the community has in the safety of electricity. Again, this class of business is of an intermittent character, and, unless the system is a very large one, the service taken by picture machine theaters will result in fluctuation in voltage on the line; and the use of the current saving device will result in lessening this fluctuation, thereby giving better service to other customers.

"I do not classify reactances as current-saving devices, as they are simply energy saving devices and do not save current for the central station. It is true that they lessen the current of energy registered on the meter for the same service, but they draw from the line the full amount of current, and the effect on the line due to the highly inductive character of the load is worse than with the use of a rheostat. Transformers or compensators will show a saving both in current and energy, thereby benefiting the central station as well as the customer.

"It is unfortunate that where direct current supply only is available we have no current-saving devices which compare in efficiency with the corresponding alternating-current devices, but I think it is only a question of time when devices of this nature will be available."

Canners to Appeal Through Films

Secretary Frank A. Gorrell of Baltimore, in his annual report to the National Canners' association, urged the adoption of wider publicity plans, and one of the means suggested was motion pictures to show the details in the process of manufacturing canned goods. This was in an effort to disprove the libels on the industry, Mr. Gorrell declared.

A Motion Picture Party

The Herald, a newspaper of Duluth, Minn., announced what is termed a motion picture party to be held February 11. The whole town was invited to come out and parade up and down the main street at an appointed hour, in order that motion pictures might be taken. The pictures will be shown in other cities and will serve as an advertisement for Duluth.

A Photoplay from the Mojave Desert

Essanay's Western Offering

THIS is the first of two photoplays to be released by the Essanay company the latter part of February, in which the scenic back-grounds have been obtained on the Great Mojave desert of southern California, visited by the Essanay Western players on their trip to southern California. That there is romance to be found in this great barren waste is manifest by the remarkable production the Essanay Western company has obtained in "The Outlaw and the Child."

Aside from the awe-inspiring qualities of the scenery, the acting, photography and the careful management of the scenes down to the most minute detail is in evidence throughout the production. The noteworthy bit of acting by the child actress employed in this picture will surprise and please grown-ups in the audience.

In all respects the subject is a worthy effort and rises splendidly to the demand for better quality Western subjects.

The story of the play, briefly told, is as follows:

Dan Warrington, an outlaw, is captured by the sheriff and sent to jail. After the sheriff has placed a guard over his captive he goes home and is welcomed by his little girl, a child of five. Not long after the sheriff is notified of the escape of Warrington, which was effected through the aid of some friend of the outlaw. The sheriff leaves the little girl at home asleep, but an hour later the little one, awakening, finds her father gone, and in anxiety for his welfare determines to go out and hunt for him. With her dolly in her arms she wanders out of town and into the desert, unmindful of the dangers in her path. In the meantime the sheriff and the posse are shown in a spirited pursuit of the escaped outlaw, who, however, succeeds in eluding them. The officers of the law give up the hunt and the sheriff, returning home, finds his little daughter gone. The alarm is soon spread and a search party, headed by the sheriff, leaves the town to seek the lost baby. The little girl by this time has wandered far, and, unable to find her way back, drops exhausted in the hot sands of the desert. Some time later, Warrington, riding leisurely across the desert, sees the patch of white dress off to his right, leaves his horse to go and investigate. Finding the little girl unconscious, he soon revives her with a drink of water from his canteen, even sacrificing the allowance he should have retained for himself that the little girl's life may be spared.

He then returns to where he left his horse, but finds it has run away. In despair he is about to give up hope of ever getting the little one back to her father, when his conscience makes the right way plain to him.

Although he knows that even if he survives the terrible ordeal he will have yet to face a cold justice, he determines to give up his own selfish desires to save the life of the little helpless child.

Alone in the Desert.

After many hours' hard tramping over the desert, the torrid sun shooting hot darts on his head, his throat dry and cracking from a burning thirst, he finally stumbles out of the desert at the edge of the town and makes his way painfully, blindly, to the sheriff's door.

In the meantime the others have given up the chase and the sheriff, under the care of two stalwart men, has been brought home. When the outlaw and his tender burden approach the door, two cowboys run out, seize the fainting man and carry the child to her father's arms. A moment later, after kissing the little one goodby, Warrington, bad man, and a general worthless scamp, sinks to the ground dead, having fully redeemed himself before the bar of eternal justice if not before the laws of man.

Amending New York Licenses

Assemblyman F. A. Higgins, of New York City, has introduced a bill in the New York legislature to amend the greater New York charter with respect to the licensing of motion picture operators, repealing that part of the present law which stipulates that no person shall be eligible to procure a license unless he be a citizen of the United States. The amendment has been referred to the Committee of Cities, and if it passes, will allow foreigners to obtain a license to run motion picture shows in New York City.

Some Questions Answered

By William T. Braun

In this department, answers will be given to questions upon any subject in connection with the conduct of moving picture exhibitions, the operation or construction of moving picture machines, the making of pictures or films, or any questions pertaining to the amusement business which can be answered without specific reference to any person or company. Questions are invited, and will be answered as promptly and as fully as possible.

WIRING DISSOLVER.

Will you kindly furnish a wiring diagram, and directions for wiring a moving picture machine with two lamphouses to be used for projecting the moving picture and slides with dissolver attachment?—L. D.

I TAKE it for granted that you have the stub wires in your operating room for connecting the lamp leads. The main switch, see diagram, should be installed on a slate or some other non-absorbing, insulating base in a metal case. The stubs of the mains should be attached to the switch binding posts or terminals, fuse end, as indicated in the diagram. Now run the two wires from the terminals on the main switch to the switch controlling one of the lamps, attaching your wires to the fuse ends. Splice the wires as shown on the diagram for the other lamp, running them to the fuse end of its switch. Be very careful to make a good splice, soldering it well and taping when finished. In connecting the lamps to their respective switches run the negative wire from the switch terminal direct to the lamp. The positive should be connected from the other switch terminal to the rheostat and then run a wire from the rheostat to the lamp.

The accompanying diagram merely shows how the wiring should be run and where the connections are to be made. The lengths and sizes of wires will have

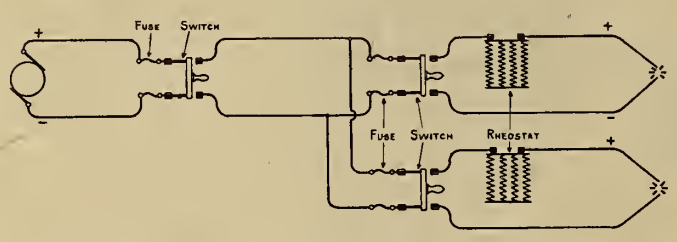

to be figured out as I do not know where your machine, rheostat, etc., are located with respect to your wires. But by following out the diagram you cannot go wrong. A very good plan is to have your wires so arranged that the three switches may be mounted in one cabinet. This saves a lot of time and wire, and is much more convenient than two cabinets.

The wires from the main switch to the two service switches should be ordinary rubber covered. All the wires on the other side of the switches, or those connecting the lamps and rheostats with the switches, should be stranded, asbestos covered wires and should not be spliced in between connections. Nothing smaller than No. 6 wire B. & S. gauge should be used. The wires should leave the switch cabinet and lamp house through porcelain bushings, so as to keep the wires from making an accidental contact in case the insulation wears off.

Connections to the terminals on the switches, rheostats, and lamps when using stranded wire should be made with standard lugs, either of the clamps or copper tube type. This insures a tight connection, prevents arcing, and a possibility of fusing of the wires at the point of contact. The solid wires can be wound tightly enough around the terminals to get good contact. It will do not harm at this time to say that many fuses are blown by the overheating of wires and much trouble caused by not having tight connections.

Fuses of the cartridge type should be used so that if they blow by excess current or short circuit, the gases resulting are taken up by the filling, the explosive tendency is reduced, and arcing eliminated. Also they are much more easily installed than link fuses and fuse wire. Fuses should always be installed so that they will protect the switches. Fuses are stamped with about eighty per cent of the maximum current that they will carry indefinitely, this allowing about twenty-five per cent overload before they blow. This is done so that there will be no excessive blowing of fuses.

Knife switches of the double pole type should always be used when the circuit they control is carrying more than six-sixteenth-candle power lamps or the equivalent. Arc lamps should always be controlled by knife switches. Also double pole switches are better than single pole as they absolutely disconnect the part of the circuit out of use, and are also much stiffer. All switches should be mounted on slate or some other insulating non-absorbing base. In installing the switches they should be mounted vertically with the live end below, so that gravity or an accidental push would not close it and the circuit.

If you have direct current the positive lead should be connected to the upper carbon, the negative to the lower. The positive and negative poles can be distinguished by connecting them to the lamp and letting the lamp burn for about ten minutes. A crater forms on the positive and a point on the negative carbon. If you are using alternating current either lead can be connected to the top or bottom carbon holder, as a crater forms on both carbons.

A separate rheostat should be used for each lamp. This may be of the adjustable or permanent attachment type. It is customary to cut the rheostat in on the positive lead.

In operating this dissolver first close the main switch and then the lower one for the motion picture lamp. When you are ready to run the slides close the top switch and both lights will be burning. When the show is over both lights may be shut off by pulling the main switch.

EXIT LIGHTS.

What light is the best to use for illuminating the exit signs in the theater?—E. R. J.

THE new Chicago Building Code requires that an exit sign having letters six inches high shall appear over every means of egress from the auditorium. This sign shall be illuminated with a gas or sperm oil light covered with a red globe. These are undoubtedly the best lights for the purpose as there is no possible danger of them being turned off in case of fire, as may happen if electric light is used and controlled by the main switch. Also if electric light is used and one of

the fuses blow on the main switch the whole house will be plunged in darkness.

If gas is available it may be used in the place of sperm oil. A good sign is made by making a square box of frosted glass, leaving the top and bottom open, and painting it red, leaving the word "EXIT" in white.

If electric light is permitted and is used it should not be controlled by the main switch as in that case it would be liable to be turned off in case of fire by some excited person. Any appliance of this nature must be made fool-proof. The switch controlling the exit lights should be placed in the lobby or box office and not in the cabinet with the other switches. In this case the supply wires should be taken off the service mains before the main switch is reached. The switch, wherever located, should be protected by the proper size fuses.

These lights should be kept burning as long as an audience is in the house.

Recent Films Reviewed

On the Border of the Forest.—Eclipse. An Eclipse medieval drama of familiar character, very fine in all its material features. The acting is also good. Eclipse turns out these fine productions every little while, making little noise about it, and getting comparatively little credit—in America. The wiseacres have agreed to call them "foreign." There are reasonable critical objections to be brought against some of the Eclipse characteristics, but it seems unjust that such a high-class producer should suffer from a mere chauvinistic prejudice. If an American maker turned out productions of equal beauty and magnitude they would be greeted with delirious eclat.

Port Arthur, the Canadian Iron Center.—Eclipse. It's surprising to see how the dirtiest and ugliest of scenes can be made attractive by fine photography. By a skillful use of shadow and film tint the most prosaic kind of an industry shows up beautifully. It cannot be denied that the picture of the blast furnace with its stream of molten metal is weirdly beautiful. And of course the film is interesting and instructive, registering another success for Eclipse as a producer of high-class scenics.

Priscilla's Engagement Kiss.—Biograph. It's astonishing to see how much fun the Biograph players can make out of such slight material. The plot is a bunch of nonsense even to the point of piffle, but it is good nonsense, and fills a 1,000-foot reel chuck full of laughs. There is a lot of expressive detail, humorous by-play such as Biograph knows how to throw in. We suspect the Biograph comedies are worked up in rehearsal and that anybody who has a good suggestion offers it. Much of the detail seems too happy and spontaneous to have been worked out in advance. There is a wealth of bright mentality somewhere, and we suspect the actors furnish their quota along with the producer and scenario writer. It takes no clairvoyant to see that there is a thorough-going and wide-reaching *esprit de corps* at work among the Biograph forces.

Thelma.—Selig. A dramatization of the Corelli novel, or rather an adaptation, for many liberties have been taken with the original. The Norwegian scenes are good, but the same can scarcely be said of the London episodes. Marie Corelli's plot is lofty and serene by comparison. Some of the settings suggest Norway with great success. The acting is commonplace, with one exception, that being in the part of the father. The actor made him a fine figure of a man, and he went up in smoke in heroic style. This was about the only inspiring feature of the performance.

His First Commission.—Edison. A touching little drama showing the human side of a great man. It is all managed with good taste, and the heart-strings get many a gentle tug. Edison has made an enviable record lately in putting over dramas that "choke you all up" as the expression goes. It is a much more difficult matter to "make 'em weep" than to "make 'em laugh," and the firm that can do both is on the high road to success. The legitimate manner in which Edison achieves its emotional effects, whether humorous or pathetic, deserves the fullest critical commendation. The one quality to be observed in all Edison films is sincerity. It's a quality that once more proves a winner.

Jean Rescues.—Vitagraph. A simple life-like story, with still enough of the sensational to make it dramatically effective. Jean's rescue work is quite thrilling. The romance is a pleasing one, well acted by all concerned, except perhaps the peevish fiance, who rather overdid his churlishness. As he seemed to be a chronic grouch, it raised a wonder that the heroine ever could have loved him. As an actor he could learn points from Jean. The final tableau is pretty, suggesting just enough of the happy-ever-after sentiment without any undue palavering.

Practical Brook Trout Breeding.—Pathé. One of the most complete and inclusive industrial subjects ever witnessed. The whole process is there, presented chronologically from egg to grown fish. It is all very instructive and interesting.

Hearts Hunger, Happiness.—Pathé. A rather funny piece. The trick feature brought laughter. In places it descended to a pretty low level of foolishness. Food and all that is associated with it always proves to be an unedifying subject for drama. It is man's lowest passion and the less said about it the better.

Two Reformations.—Essanay. A strong Western drama of much originality, enacted with restraint and good effect. When a sub-title stated that the hero was going out West to search for gold, we sank back with a groan, but he never found it and the novelty proved electrifying. It was thrilling to see the old expedient get cheated of its usual result. No, the play was concerned with something more interesting and profitable than finding gold in the West. The gold discovered was in two men's souls. It looked like dross for a while, but was refined and reformed by the quiet unconscious influence of a good woman. A moral tale, but not the least bit mawkish, and thoroughly convincing.

His Bogus Uncle.—Lubin. A fertile and amusing plot which we suspect might have been worked up with better effect. There were chances for sly hits at the fortune-hunting and wealth-revering propensities of human nature, of which little advantage was taken. And the schemer got such a little run for his money. After putting over such a clever scheme he ought to have enjoyed triumph for a little while at least. This would have rendered his downfall all the more poignant when it came. But he was the goat of every situation from first to last. The piece creates much amusement, but, if our contention is right, could have created more. Florence Lawrence was in the cast. So she really *is*, etc. We began to fear that somebody would have to do the "judgment of Solomon" act to find out whom she really belonged to. But here she is intact, and we hope will so remain. It is a pleasure to watch this actress' face with its firm, healthy contours, its native intelligence, and air of perfect certitude and competence. Lubin now holds the Kohinoor. 'Tis a precious trust and a dangerous one. Beware of covetous nabobs!

A Double Elopement.—Lubin. A merry comedy that keeps the laughs coming every minute. It is enacted in a farcical manner, a style in which the Lubin players excel. The actress who took the part of the mother seemed miscast, being too young for the role. She did her best, but physique was against her. Having seen her in a long line of romping ingénue roles, we cannot think of her as an elderly woman even though she powder her hair and loosen out her figure.

The Deluge.—Vitagraph. This production comes fully up to expectations, which is saying a great deal, because most long-heralded and loudly ballyhooed releases do not. It almost comes up to the Vitagraph announcements, which is saying a great deal more. Of course, it does fall short of "astounding and appalling our most vivid imagination," and of proving to be a "marvel of world wonders," but one readily admits that it is a very fine production reflecting large credit on the firm that made it. After mentioning that the world-cataclysmic nature of the deluge received only meagre suggestion, and that for a deluge there was remarkably little water in evidence, criticism has nothing to say that is not highly commendable. The tone of the produc-

tion is sincere, dignified and impressive, and the pictures disclose a wealth of beauty. One recognizes the touch of a master hand in the detail and pictorial composition of the scenes and is not surprised to learn that Tissot provided the inspiration. The last scene of all was perhaps the most impressive. Here beauty and religion combine to form a truly awe-inspiring spectacle. The picture excelled in photography throughout, being luminous with warm sepia tints. The amount of labor and study and expense that went into the making of this film can scarcely be fathomed by one who views the finished product, but there were undoubtedly large expenditures of all three. The result justifies it. Really, Vitagraph, you deserve our highest praise.

Davy Jones in the South Seas.—Vitagraph. An interesting example of Vitagraph enterprise. The story was supposed to touch on the Island of Borneo, so a tribe of Borneans, or from somewhere else in the South Seas, was procured (Heavens knows where!) to give local color. They proved to be mighty good actors too, and gave the film an element that was striking and unusual, and highly entertaining. And of course the verisimilitude was simply there! The inside history of the film ought to be written, for many funny things must have happened in getting those wild hottentots before the camera.

Monte Cristo.—Powers. A pretentious production, quite successful. Considering the detailed and complicated nature of the plot, it comes out intelligibly and with considerable dramatic coherence. One not already familiar with the story could readily understand the photoplay form, which is no small triumph. It is at best a bombastic, melodramatic story, and if the actors made those qualities fully apparent, they probably were well within the bounds set by the nature of the story. The production made heavy demands on the scenery painter and property room, and these demands were more than adequately fulfilled. With such productions as this Powers puts itself in the ranks of the progressive Independents.

Heart Beats of Long Ago.—Biograph. A tense drama constructed around a familiar situation. A girl has a proscribed lover whom she conceals in a closet when surprised by the arrival of her affianced. The latter suspects that she is hiding his rival in the closet, though she makes believe that she is not. He pretends to take her word for it, but nevertheless so manages matters that the closet remains closed until the man inside is dead of suffocation. This situation was first made famous by Balzac in a short story, and has found numberless embodiments in drama and story ever since. If memory serves, Biograph used it once about two years ago. In that instance the vengeful suitor made use of the closet door for a little target practice. It is always a fertile situation, with its quiet and dissimulated, but tense, conflict between the man and woman—a sort of cat and mouse game. It was worked up very well here, and the drama had an added interest in that it was laid in Italy of the fifteenth century, and thus gave an opportunity for some fine stage pictures. They really were fine pictures, and would have been finer if less cramped. Another thing: We think showing the interior of the closet was a questionable matter. Better to have left it to the imagination; there is something vastly stimulating about the thought of tragedy behind a closed door. The mystery of it adds terror. Besides, the victim's death struggles were not pretty to watch. Suffocating men evidently make faces and look cross-eyed.

The Missing Bride.—Pathé. A pretty, romantic piece which with its skillfully contrasted emotional elements, first a wedding celebration with "quips and cranks and wanton smiles," and then a dark, mysterious castle vault with an ancient corpse and other terrors, stimulates a lively interest. The acting is spirited, and the costumes and settings, all in color, highly artistic. The subject has a poetical quality and the film is, on the whole, one of the nicest, prettiest things Pathé has shown in some time.

The Sheriff's Sister.—Kalem. Not a very pleasant photoplay, but well presented and well acted. The plot is concerned with a Mexican who deserts his wife and child, and has sinister intentions upon a nice young girl. He is foiled and brought to account in a very dramatic manner. Admitting that the drama has sufficient interest to hold close attention, it still must be noted that the effect is rather unpleasant, in that it hinges upon the dark and seamy side of sex relationships. A villain who seeks to revenge himself upon a man by ruining the man's sister is certainly a moral leper and better left untouched.

An Imitator of Blondin.—Pathé. If there is a spark of originality to this comic, we confess our inability to detect it. The comedian gets an idea that he would like to perform a certain acrobatic stunt, and begins to practise it at all times and places, with results all but fatal to himself and others. The dramatic interest is maintained by a chase. Such comics come to America from France like a swarm of locusts, and, beyond a certain amount of acrobatic daring, it is hard to see any merit in them, having lost their novelty long ago. But they do bring heavy laughter from a few people, even though the judicious grieve. As all classes must be satisfied, these acrobatic comics have that much excuse for being.

Max Gets the Boxing Fever.—Pathé. A subject similar in character to the one on the same reel, but then Max is Max. He can make anything go. And he stamps everything so indelibly with his own individuality that it appears novel. The end is a whirlwind of fun—burlesque raised to the *n*th power.

Two Valentines.—Edison. A piece that somehow recalls "The Try-Out," though just why would be hard to say, as the two are not similar in subject matter. It is a better piece also, but exhibits similar faults—a tendency for the action to drag, and for the comic spirit to wander into by-paths of teary sentiment. Yes, now we know what gives rise to the resemblance: in each piece there are two execrable scenes showing the hero and heroine alone in their respective rooms giving way to melancholy tears. Now tears, real, sad, salty tears, have no proper place in light, almost farcical, comedy. They would be not less appropriate in champagne. They indicate dejection; and dejection and comedy form a dramatic mixture that makes one cringe as it goes down. It is like rubbing something the wrong way. The effect is dismal and inexplicably jarring. It is a very culpable example of dramatic bad taste. Aside from this, the piece proved sufficiently diverting, especially in those features that went to create the boarding-house atmosphere. The heroine was enacted sympathetically, but the hero seemed over-bashful, almost to the point of unmanliness.

Girl of the Mountains.—Vitagraph. A film that lags considerably in action but has many fine moments nevertheless. In one scene the heroine walks off the stage and the hero stands gazing after her for what seemed like two full minutes. He slowly drew a pipe from his pocket and lighted it; that was the only action. It cannot be said that the episode was without interest, because Maurice Costello did it, and there is pleasure in watching him do anything, even lighting a pipe. But after all that is not drama, and it smacks of padding. The later scenes are very strong. Miss Fuller played opposite Mr. Costello, in a style that was replete with sincerity and dramatic force. It is sad to think that this team must part.

The Doctor.—Edison. It's a red letter day that releases two such fine films as Vitagraph's "Deluge" and Edison's "Doctor." While by no means so big and ambitious as the "Deluge," the "Doctor" is nevertheless superlative in its own way. It is a drama with a big human appeal, stirring the heart's finest emotions. This reviewer confesses to no such throbs and pulsations for a long time past as were experienced during the performance of this film. A large audience seemed to share the same feeling. It is uplifting in the highest sense. Such a film is really religious for it gives man grounds for believing in himself. As a production it is wholly admirable. The imitation of the well-known painting was achieved with remarkable exactitude and conviction. It is safe to say that the picture, for all its popularity, never created a profounder impression. Such is the potency of drama.

Picture Films for Island Chief

For the special amusement of the Datto of Ceubu, and incidentally to rake in a little money, two motion picture outfits are being taken to the Philippine Islands on the steamer Seattle Maru.

It is said his highness, the Datto, is a great lover of actors in the flesh and in the picture, and will be doubtless pleased to see them rush through the streets, knock each other down, and the like.

Of Interest to the Trade

By L. F. Cook

A New Independent Factor

The organization of the National Film Manufacturing and Leasing Company, New York, marks the entrance of a new factor into the independent field. The officers of the new company are: A. S. Royal, president; J. S. Young, vice-president; A. J. Clapham, treasurer; L. J. Rosett, secretary. H. Revier, I. W. Ullman, A. G. Whyte and the officers are directors.

Offices have been opened at 12 East Fifteenth street, New York. The film manufacturers included in the organization are: Revier, Gnome, Manhattan, Cines, Film d'Art, Columbia, Capital, United, Comerio and Colonial. These makers, it is said, have all put their factories into the company in exchange for stock.

The National Film Manufacturing and Leasing Company is incorporated for $1,000,000. At present the film will be sold through A. G. Whyte, but after about ninety days it will be sold to exchanges direct.

It is the intention to give exchanges exclusive territory. There is also a special rebate feature in the arrangement, payable in stock of the company. It is understood that there is no stock to be had except under this arrangement.

The new company assures exhibitors of an exclusive program, offering different film from the Sales Company, and so giving the public a variety. The company has a really attractive offer for exhibitors, and they will do well to get in touch with the management.

The company has secured control of the Meredith-Jones camera patents.

New York Letter

Apropos of nothing at all, we wish to say that our idea of the ultimate in class, is the lady that scans the moving pictures through a gold-mounted lorgnette.

Everybody knows that the grand opera season is on in New York. That part of Broadway near the Metropolitan Opera House is nightly crowded with the automobiles of the elite. Also, the line of those that go is a long and formidable affair that indicates a strong love of the best in music.

Not long ago a prime mover in one of New York's civic bodies praised highly the initiative that made it possible for the masses to hear and see the great masterpiece operas.

This, for no reason at all, called to mind a modest moving picture theater, situated nearly opposite the opera house on Broadway. Here all the pictures are innocuous enough to please everybody. But stop and think a moment of some of the operas they prate about and advise the masses to see, at almost any cost. Many, many of them are sin-stained, and it appears that the worse the plot the more beautiful the music. In fact, a sweet lady told us the other day that she judged of the greatness of the opera by the number of tears she was obliged to shed over the troubles of the heroine. The more tears there were, the better the opera.

In "Il Trovatore," "La Tosca," "Madam Butterfly," "Il Pagliacci," "Cavalleria Rusticana," and "Salome," not only is blood shed in all of them, but a complete story of the sins of some of these great operas won't pass through your Uncle Sam's mail. Go a little further. "Faust" ends in insanity, "Carmen" in murder, "Aida" is buried alive, and "Othello" ends in strangulation. Whew! Perhaps a series of such films wouldn't make the Board of Censorship sit up and take notice. This is not to be construed as a reflection on that august body. They are doing, and will continue to do, heroic work.

Still a comparison of those two enterprises, on opposite sides of Broadway, shows that even New York has its inconsistencies, too. Wonder if those stories, as films, would get by if accompanied with beautiful music.

Ellis Cohen, formerly manager of the moving picture end of the *Morning Telegraph,* has severed his connection with that paper. He is now the agent for the Cellit non-inflammable film and also Edinol Hydro, a developer for moving picture films. Both of these products of the Farbenfabriken of Elberfeld Company will be handled from Mr. Cohen's new location, 117 Hudson street, New York. Cohen made many friends while connected with the *Telegraph,* and those now wish him every success in this new venture. There has been a new release up to Cohen's house lately, and now he has to get busy, because baby's shoes cost money.

R. Prieur has again set sail for his beloved France. He has been trying to get away for some time, but his many interests in this country detained him much longer than he had anticipated.

Saturday night, February 11, was a big night socially in film circles. The Vitagraph gave a dinner to Mr. Blackton in honor of his recent return from Europe, and the Imps gave a dance at Leslie Hall on the same night.

Last week in this letter we commented on the value of these social occasions, so we can only say that we are always glad to make mention of such occasions. The more of this sort of thing there is, the better the feeling that will prevail.

The Imp ball was honored with a splendid attendance, much larger than was anticipated. Carl Laemmle led off in the grand march at eleven o'clock, and from then on the guests were kept busy dancing to the music of the orchestra from the music house of Laemmle.

A new scheme whereby certain types of actors double cross the film manufacturers has recently come to our attention. One of the film manufacturers employed a certain actor at so much per day. When the film in which this particular actor had been starred had been about half completed, the actor informed the manufacturer that he would refuse to go on with the picture unless given a permanent position in the stock company.

Another variation of this scheme is as follows: An actor employed at so much per day will work hard and conscientiously until the production is about three-quarters finished. He then appears before the film manufacturer and refuses to continue unless paid to

an extent far in excess of the sum originally agreed upon. To refuse to submit to this blackmail will cost the manufacturer hundreds of dollars to rephotograph the picture.

To guard against such unfair methods, it is quite probable that manufacturers in hiring actors for positions outside of their regular stock companies will name a lump sum to be paid for services in any particular production.

"In the Commissioned Ranks," a future Nestor release, is receiving unstinted praise from most of those who have seen it. It is a military play, on which the Nestor people have expended a great deal of attention, and which they intend to release with special advertiseing matter worthy of the subject.

Messrs. Carick and Saxemeyer came to New York one day recently, and after gladdening the manufacturers' hearts by carelessly scattering a few standing orders, they hustled back to Sleepyville.

A Remarkable Fire Extinguisher

The Electric Appraisal and Inspection Company, Cleveland, Ohio, is sending out literature describing "Pyrene," a new fire-extinguishing liquid of remarkable properties. When projected from a small squirt gun it will extinguish any flame, even that of gasolene. Burning motion picture film is instantly extinguished, and even the electric arc in full operation is stopped. Demonstrations prove Pyrene to be all that is claimed for it. It has been adopted by the General Film Company, Cleveland branch.

Vitagraph's Annual Banquet

Employes of the Vitagraph Company of America to the number of two hundred and fifteen were entertained recently by President W. T. Rock at a banquet at Raub's restaurant in Brooklyn. Following the dinner, which is an annual affair, there was an entertainment in which the actors of the Vitagraph stock company participated. The employes invited guests for the entertainment and ball.

The first course of the banquet was served at 7:30 o'clock, and after a delectable menu had been served the hall was darkened and the latest film made by the Viagraph company, entitled "The New Stenographer." was run off. The second picture showed how and where the Vitagraph pictures are made. The employes in all of the departments saw themselves at work.

Mrs. Elinor Trimble, one of the members of the stock company, then sang a soprano solo, and Miss Florence E. Turner appeared in impersonations. Miss F. Jessie Smith, alto soloist, and Harry Mayo, were heard in song and story and Lawrence Trimple recited "Jean and Her Master." Adele de Garde appeared in specialties and Maurice Costello read a scene from "The Merchant of Venice." "The Vitagraph Eagle was the subject chosen by E. L. McIntosh in his part of the entertainer. Kenneth Casey was seen in character changes, and the entertainment concluded with a Vitagraph portrayal of "A Tale of Two Cities."

Seated at the table in the banquet hall were William T. Rock, president of the company; J. Stuart Blackton, vice-president; A. E. Smith, secretary and treasurer; Charles Kent, Van Dyke Brooks, Frederic Thompson, E. R. Phillips and Lawrence Trimble, directors; J. B. French, general superintendent; A. V. Smith, cashier; John Rock, general manager of the Chicago office, and Mrs. Rock, and E. V. Brewster, editor of the *Moving Picture Magazine*. There were also about thirty invited guests.

Members of the stock company who attended the affair included William Humphreys, John Bunny, Mr. and Mrs. Harry Mayo, Robert Gaylord, Maurice Costello, Charles Kent, W. L. Ackerman, Edward Phillips, Teft Johnson, J. Stuart Blackton, A. E. Smith, William T. Rock, Jr., Mr. and Mrs. E. J. Ackerman, W. Bunyan, C. Chapman, Ralph Ince, A. Hollingsworth, Miss Florence E. Turner, Miss Gardiner, Mrs. Humphreys, Mrs. Greenwood, Mrs. Clinton, Mrs. Costa, Miss Pavis, Mrs. Thompson and Miss Finch.

After the entertainment about six hundred guests of the company enjoyed dancing. Music was furnished by an orchestra of twenty pieces.

There is always something new at the Vitagraph studios. A drove of reindeers shipped from Ulm, Germany, were held in quarantine three or four days in order to undergo a thorough inspection and examination as to their health and general condition. They were found to be in excellent shape, taken in hand by "Reindeer Bill" Watkins who is an expert in handling anything that has horns and delivered to the Vitagraph menagerie as valuable "assets" in the production of several life portrayals in process of construction.

On the way over from New York to Brooklyn, "Bill" created quite a sensation as he drove the Vitagraph importations through the financial districts of lower Broadway and across the Brooklyn bridge attached to a sort of four-wheel skeleton buggy. When he struck the speedway of Ocean Parkway and let the "critters" loose, giving them full head, they looked more like a flying machine than anything else and the mounted and cycle cops could not get within a mile of them. They arrived a little bit too late for the Ark scene in "The Deluge," but they will be seen in something bigger a little later on.

Next week should be called the week of "A Tale of Two Cities." The shade of the immortal Dickens will get up and take notice when this faultless Vitagraph life portrayal is pictured on the screen. Cruicshank, Phiz and Barnard, were they alive, would acknowledge the perfection of this life portrayal over their own illustrations of their fancy.

American History In Edison Films

The Edison Company has just announced the completion of plans for probably the most valuable contribution to the motion picture world since the inception of the industry. It is no less than a series of reels, to be released at frequent intervals, showing the most important events in American history from the discovery of America by Christopher Columbus up to recent times. Each reel will not only be complete in itself, but in order to add interest the Edison company announces that it will not hesitate to build a story around the main event, at the same time preserving strict historical accuracy. This is the plan which the company has successfully followed in handling subjects of national importance relative to sanitary conditions, and it is believed that the same plan will be popular with the series now under way. In other words, the company believes that to *educate* through the medium of motion pictures *it is first necessary to interest.*

It may readily be imagined what a tremendous value this series will have to educators and schools

as well as to the general public. It is hardly necessary to say that the subjects will be adequately presented —suffice it to say that they will be done in *Edison* way. Details of the first release will be announced shortly.

That Imp Ball

Last Saturday the Imp gave a ball, at which most of the good fellows among the independent manufacturers' employees got together for a royal good time. The Imps attending were: Carl Laemmle, Ed Roskam, Miss Doretta MacDonald, Harry Zellar, Jack Cohn, Rene Bardet, Eugene Gaudio, I. Stolzer, Bert Siebel, Henry Klotz, Harry Willstumpf, Ed Williams, Miss D. B. Pollock, Myra Callahan, Miss Irene Brogan, Julius Bernheim, Harold Wilkins, Robert De Vide, C. B. Hoadley, John Kelly, Miss Gertrude McDonnell, Miss Agnes McDonnell, Warren Hopper, Herman Endlekofer, Lester Seman and Anthony Maresca.

Employees of the Thanhouser Company present were: Theo Deiss, Charles Gercke, Dany Keepers, Tom Zimmerman, Carl Gregore, Fr. Champury and others.

Running Shows with an Auto

The unique scheme of operating a motion picture show with an automobile was recently tried at the Olympic and Grand theaters, in Pocatello, Idaho. There being no electric current in town, Manager Fred McCracken of the two theaters named, conferred with J. B. Trist, of the Trist Auto garage, and that genius at once arranged to back up one of his cars to the rear door of each of the playhouses, attach a pulley to the drive shaft, connect it up with the electric generators in the theater and furnish light for the picture machines and for the theater buildings.

Synopses of Current Films

From the Manufacturers' Bulletins

Solax

LOVE'S TEST.

Margaret Golden, a winsome and wealthy maid, is sought by many suitors but has given her heart and the promise of her hand to Harold. Edith, who is herself in love with Harold and consequently jealous of the existing friendliness between he and Margaret, contrives to raise a doubt in Margaret's mind as to the disinterestness of Harold's love for her and she decides to put him to the test. She writes a letter to Harold, telling him she has something important to tell him. The letter is seen by her Aunt, with whom Margaret makes her home. The Aunt tries to dissuade her from what she regards as a very foolish move, for Margaret has told her that she intends to tell Harold she has lost her fortune. Failing to change Margaret's mind, the Aunt waylays Harold and tells him of Margaret's plan. Harold is at first indignant—but finally regards the matter as a joke and determines to pay Margaret back in her own coin. He listens to her sad tale and then proceeds to tell her that he too has lost his fortune. As they are both poor, he can see no reason why they should not marry at once and as Margaret is hardly in a position to refuse him, she accepts and they marry and start for their new home in poverty row. The scenes which follow show the young couple amid noval and strange surroundings. Poor Margaret, entirely unfamiliar with house work, tries hard but her efforts are pronounced failures. Harold butts in and his efforts to instruct Margaret in the gentle art of housework give rise to a lot of very funny comedy. Finally both of them reach a point where forbearance has ceased to be a virtue and they each decide to confess to the other. This they do, and happy in the knowledge of each other's love as proven by "Love's Test," they depart from their humble home, bidding a hearty adieu to "Old Ironsides" and we next find them at Martins, where, seated at a table groaning with good things, they are busily engaged in making up for lost time, the past forgetting and the past forgot.—Released February 24.

Nestor

HIS FATHER'S HOUSE.

Being thrown upon her own resources without a practical education, Nina had gladly accepted Mrs. Allen's offer to assist her in her duties as housekeeper for Carter Sheldon and his son, Jack. She felt sorry for the motherless girl, and knew that under her care she would at least be safe and sound. Jack also pitied the orphan, and pity ripened into love, but here Carter Sheldon interfered. Waiting until his son had gone away on a business trip, he discharged the girl, and then, although Jack pleaded for his sweetheart upon his return, the father remained firm: Jack must choose between them, and Jack chose—Nina! Five years had passed since her marriage when Nina was stricken with yellow fever, and fearful lest little Clarice should catch it, the mother sent her child to Nance Olden, a friend of the nurse. But the whole town was placed under quarantine, and long ere Nina had recovered or Jack returned to care for the little one, Nance had jumped quarantine, and although they searched diligently for two years, no trace of either had been found. Nance had not prospered during these two years, and her temper, never of the best, had grown gradually sharper. Had she not still cherished a faint hope that clarice's parents would turn up to reward her, she would have thrust the child out on the street, but as it was, she contented herself with blows, or in sending the "hateful brat" supperless to bed. Clarice, however, had made friends with an old gentleman who passed their steps on his way to business, and finding the child so unhappy, and himself so lonely, he paid Nance handsomely, then adopted the little one as his own. But scarcely had Clarice become accustomed to her new home than a fresh joy awaited her. Jack had at last gotten track of Nance, and from her learned that his child had been adopted by Carter Sheldon. Impatiently he hurried to his father's house, where, this time he did not ask in vain for his wife. This time little Clarice was there to plead for her mamma, and all was well.—Released February 22.

Vitagraph

THE NEW STENOGRAPHER.

Brown and Robinson advertise for a stenographer and typewriter. The next morning an applicant puts in an appearance. The clerk greets her, but when he sees her face he is paralyzed. She is very capable, but extremely homely, a regular "false face." When the heads of the concern arrive at the office, they are introduced to the lady; they are pained when they see her "phiz"; it almost drives them to extremes. As a business proposition she is all right, as an ornament she is a mistake. She manages to hold down her position with credit to herself, and profit to her concern. At the end of a few months she becomes indisposed and asks for two weeks' leave of absence, which is granted, with the understanding that she will provide a substitute. She sends her cousin to take her place and the cousin is a "beaut," who wins over the bosses and the clerk. In every way they try to make themselves agreeable. She accepts their bouquets, but withstands their invitations to dine and a night at the show. On the last day of her stay a very funny looking "sawed off and hammered down" little "runt" puts in an appearance. She greets him as "honey," kisses his bald head and shows other marks of affection, then introduces him to Messrs. Brown and Robinson as her husband. With crestfallen countenances, they declare themselves "stung" and with one accord exclaim "Never again!" At this climax the old "funny face" returns. She is left alone in her glory, while Brown and Robinson go out for a nerve tonic and the clerk gets under cover to escape the agony.—994 feet. Released February 18.

American

THE COLLEGE SPENDTHRIFT.

"He was the only son of his mother and she was a widow." The boy was the apple of his mother's eye, and motherlike she had lavished on him the majority of the meager resources at her command and has gone to the extent of mortgaging her home to pay the boy's expenses through college. He is thoughtless and in no measure appreciates her struggles and the sacrifices she is making for him. He is a "Prince of good fellows" and squanders the money she is scraping for in riotous living. After graduation, he needs more money to enable him to take a position offered him in the West. The home being mortgaged to its limit, the widow raises the necessary funds by realizing on what jewelry she has left and thus equipped, he goes West, promising his mother as he says goodby, that he will write often. In new scenes and with new interests, he soon forgets his promise, and the loving, praying mother at home is only an occasional memory. The mother, at home, alone, struggles for a year, is turned out of her home and as other years go past, becomes poorer and poorer and, after many heartrending struggles, finally ends in the poor house. Meanwhile, the son, having prospered greatly in the West, one day comes across a photo of his mother and is brought to a startling realization of his badness. Filled with remorse for his conduct, he starts East and commences a search for his mother. After many failures and much suffering of mind, he finds and rescues her from the poor house, and the two of them start for the new home in the West, never to part again.—990 feet. Released February 20.

STRATEGY.

Jack Merrill was prosperous. He possessed, but did not wholly deserve the love of his patient little wife and daughter. His besetting sin was selfishness. The home which should have been beautiful and attractive to Jack did not mean to him what home implies to the well regulated mind. The club, with its poker game and convivial highball, occupied the evenings that should have brought happiness to the wife and baby, who loved and longed alone. Yes, Jack was selfish. One night, while keeping the lonely vigil, her heart aching with her husband's neglect, the wife resorts to strategy in the hope of regaining her loved one. She writes a

brief note. "Jack: Your drinking and late hours are more than baby and I can endure. We have gone never to return. Alice." At 3:00 a. m. Jack arrives at his home in a rather unsteady condition. On his library table he discovers the note. Its contents dawns slowly upon his liquor benumbed brain, and as he realizes at last its full import, his grief is beyond all control. Alice secretly observes him from behind the portieres and feeling that his punishment has been sufficient, sends baby in to relieve the situation. Baby clasps her papa's knees just as he is about to fire the shot which would have ended his life. His hand is stayed, "Where is mamma?" he asks. Baby points to the bedroom. "Mamma and you have been playing a little joke on daddy, eh? Yes. Well, you go and tell mamma I want to see her." Baby runs out of the room to obey. Jack revolves the matter in his mind and determines to turn the tables. He fires the pistol in the air and falls to the floor. Alice rushes to his side and sobs over the prostrate form of her loved one. We call it strategy, but the wife gains her point. Jack's awakening is complete. He gathers his dear ones to his heart and home is home at last.—980 feet. Released February 23.

THE RANSOM OF RED CHIEF.

Edison

After reading a newspaper article regarding old Tightwad's rise in the world (he having received forty thousand dollars from a railroad company for an unprofitable tract of land) Bill and Jim, two happy-go-lucky characters, with a desire to increase their somewhat limited capital, hit upon a plan to get some of Tightwad's easy money by holding young Tightwad for a ransom. They accordingly hire a rig, take the boy and conceal him in a cave. The boy, by the way a freckle-faced kid of ten always up to some mischief and a general all-around nuisance, proves to be quite a surprise to Bill and Jim; for instead of weeping and wailing for home and mother he proclaims himself "Red Chief" and makes it so uncomfortable for his captors that they lose no time in attempting to negotiate a ransom of two thousand dollars for the boy's return. Old Tightwad receives this communication in the light of a joke and makes them a counter proposition as follows: *"If you will bring Johnny home and pay me twenty-five dollars in cash, I'll take the boy off your hands. (Signed) Ebenezer Tightwad."* Bill and Jim nearly collapse at this unexpected message, but after due consideration they come to the conclusion that it is really the cheapest way to rid themselves of such an uncontrollable boy, and forthwith they return him to old Tightwad, his father, and promptly pay him twenty-five dollars to boot, departing sadder but wiser men. When the boy finds that Bill and Jim are really going to leave him at home, he sets up a howl like a calliope and kicks like a mule. It takes about all the strength old Tightwad can muster to hold the boy and keep him from following Bill and Jim. By O. Henry.—975 feet Released February 15.

A STAGE ROMANCE.

At the very opening of this picture we are shown the rehearsal of a new civil war drama. Here is shown the alert stage manager with his dictatorial ways, the leading lady and her love affairs between the heavy man and the hero; and strange to say, these last two parts are reversed in the real drama of their lives. One soon realizes where the little lady's affection lies and that the green-eyed monster is fast taking hold of the rejected one. His jealousy reaches its climax upon the opening night of the play when, spurred on to hatred and revenge, the rejected lover visits the leading lady's dressing-room and sees there the revolver that she uses in the play to shoot the "heavy man," who in reality is none other than the man she truly loves. He removes the blank cartridges from the revolver and substituting real bullets instead, hastens to his own room as the curtain rises. But the warp and woof of Fate never wove a more subtle design than when the intended victim, during the action of the play, sprains his ankle, and being unable to continue his part, the stage manager assigns it to the sulprit. After hastily changing his clothes to those of the disabled man, he rushes to the star's dressing-room to change the bullets in the revolver to blank cartridges, when lo! he finds it is too late, the revolver having been taken upon the stage. The curtain is up and the culprit is compelled to be the victim of his own crime. But again Fate intervenes and he is saved, though not without revealing his own criminal intent.—1,000 feet. Released February 17.

THE RIVAL SCULPTORS.

In a street in Athens a new statue had been recently placed upon a pedestal, and the populace are discussing its merits with considerable interest. A young girl, the daughter of a patrician, appears with her father and her slave, and the old gentleman shows her the new sculptor's work. Being called by an acquaintance, he leaves her for a moment and the sculptor himself appearing, notes the girl's beauty and accosts her. She resents his familiarity and is defended by another youth, a rival sculptor of the first. And then one of those coincidences that are so common in real life: the father desires a competitive exhibition of the sculptors' skill in making a life-size figure of the girl to adorn the grand room, already so well filled with statuary, in his own palace. We see her posing in turn for each of the rival sculptors and we note the difference in the treatment accorded the two young men. When the father sees the work of the first sculptor he is rather disappointed, and the sculptor is more so. He resolves to visit his rival's studio, knowing that the rival has been more successful in love than he; and going there finds the statue unguarded. Upon viewing it he realizes the inferiority of his own work and seizing the sculptor's mallet, he demolishes the beautiful piece of work and leaves the studio apparently unobserved. But the girl, who has come to view the result of her lover's work, has seen him leave, and when she discovers the damage which is done, she and her maid clear away the debris and concoct a plan. When the three men, her father and the two sculptors, appear to view the work they find the statue apparently in place, for the girl has taken the place of the marble. After their first astonishment the statue comes to life. She descends from the pedestal, and taking the mallet, offers it to the sculptor who had demolished the marble, bidding him to finish the work upon her person. Of course he retreats discomfited, and his rival is kept from following him for vengeance by the girl's offer to take her place in his life as well as in the niche provided for the statue.—990 feet. Released February 21.

MR. BUMPTIOUS, DETECTIVE.

While having a friendly drink in a cafe the famous detective, Griffith Grafton, is pointed out to our ever ambitious friend, who overhears him tell some of the methods he employed in locating a missing heiress, which sensational case Bumptious has just read about in the paper. He watches the great detective with admiration, tries to copy his mannerisms and naturally, when he learns of the sudden disappearance of a young lady from her boarding house, he decides that he can become a second Griffith Grafton and loses no time in going to the missing girl's house to investigate the case, representing himself as a private detective.

In searching her room for a clue he finds a photograph of her friend, a somewhat stout lady, whom he decides must be the missing one. Subsequently he meets the stout lady face to face in the street and pursues her to an asylum, where she is employed as a stenographer. He manages to gain access to the asylum, but once inside he finds it difficult to get out. However, he finally escapes in his shirt sleeves and contracts a severe cold on his way home. Hastily he dons another coat and rushes to the boarding house to report the whereabouts of the missing lady, only to find that the stout lady was not the missing one after all and, incidentally, that the young lady reported to be missing was none other than his constant hoodoo, the chewing-gum girl, who had absented herself for a few days and has turned up safe, sound—and sarcastic as usual. It is the old, old story. Going sadly home, he turns to the wall the portrait of the great detective whom he has so much admired, and putting his feet in a tub of hot water, consoles himself with copious draughts of Rum and Gum.—990 feet. Released February 22.

THE PRICE OF VICTORY.

In the South of France lived old Daudet, the keeper of an inn, and his son, a young man of eighteen years—one, the father, a royalist clinging to all the symbols of the old reign of royalty and kingly power; the other, the son, an enthusiastic patriot full of all the glories of Napoleon, the invincible Emperor who stepped into the gap that the Reign of Terror had left. One day at the door of the inn appears a soldier, and from the long roll of paper he reads the name of Jean Daudet, age eighteen, and calls him forth to battle. The son is filled with joy, the father with sorrow and hatred—and they part. Eight weeks later the lad returns to the village dressed in all the wonderful trappings of a drummer boy, full of life and patriotism; and thus the old man bids him farewell, the only one in all his life whom he ever really loved. He goes forth to be shot—for what? That the Emperor, Napoleon, may send his courier in hot haste to Paris with the news of another victory. The news of the battle reaches the village, the old gray-haired father goes forth to search for his son, his boy, upon the bloody, silent, moonlit battlefield, while Napoleon and his staff ride by. Back to the inn the heartbroken father brings his dear dead and simply and humbly lays the silent white figure upon the table, and placing two candles at his head, sits alone in the silent watches of the night beside his dead one. The Emperor and his staff stop at the inn for a few moments to write the dispatch heralding the news of the victory. Small wonder when the man of destiny calls for candles, so that he may see to write, that the old father refuses to give them up. By this means the Emperor and the dead drummer boy are brought together. The father, filled with hatred, springs upon Napoleon with an upraised knife, but the Emperor almost abstractedly brushes it away as well as the sword which flashes to his defense, quietly places the Cross of the Legion of Honor upon the dead boy's breast and silently covers the figure with the flag for which he died, thus doing all that lay, even in the power of the Emperor, to pay reverence to this simple little drummer boy.—1,000 feet. Released February 24.

THE DIAMOND STAR.

Biograph

John Wilson's growing indifference towards his wife is brought to a climax when he arrives home on this particular evening, after an afternoon with the boys, in an intoxicated condition. A serious quarrel ensues and they separate, but to avoid scandal decide to reside in the same house, occupying different apartments. Practically free to do as he pleases, and suffering somewhat from the result of his hasty step, for he really loves his wife, he goes into the circle of the smart set and is fascinated by the belle. This fair charmer being possessed of a host of admirers, he is flattered by her special attentions to him, making him the favored one. He is destined to become a regular attendant at her house parties. Mrs. Wilson learns of this while on a pitiful secret visit to his rooms during his absence and hears the woman call him up by telephone, she picking up the receiver in answer to the ring. A few days later he is especially honored by a dinner given to him by the lady, but falling into his habitual indifference he forgets all about it. The lady in a huff calls him up by 'phone reprimanding him for his neglect. To make reparation for this slight he promises to give her the most beautiful diamond star obtainable, for which he has heard her express a wish. He gets the star and prepares to send it, enclosing a card reading: "Accept this little peace offering and let us be friends again. Jack." He places this in his desk drawer to send to the lady that evening. Meanwhile, she alone and heart-crushed is proffered dangerous diversion by an old-time suitor, who on this day calls to take her auto riding. Wilson sees from his apartment the man leaving his wife's rooms and becomes jealous, which jealousy clears his vision. Realizing his love for his wife and appreciating his own contemptible actions, he is torn with distress. At his office he cannot work, for his mind is ever on his apparently lost love. A little girl next door, having the run of the Wilson apartments, enters John's room and finds the diamond star while playfully rummaging about the room, and innocently takes it to Mrs. Wilson. She upon reading the card naturally thinks it is intended for her and pins it to her corsage, hurrying to her husband's apartment to thank him. He having just arrived is, of course, astounded but happy that the star although misgiven is the result of a reconciliation.—996 feet. Released February 20.

HIS DAUGHTER.

An inordinate desire for drink made this man the beast he is, for his early life must have been exemplary, or he could not have been the father of a girl of such fine character. A miner, he had made some money, but instead of purchasing a future for himself and child, Mary, procures a host of most undesirable friends. In short he becomes a worthless drunkard, chumming with the most despicable parasite in the village. On the other hand, his old neighbor, John Whittier, has been more provident and saved his earnings to provide a future for his son William. William and Mary have grown up together and have been sweethearts from earliest childhood; although not really engaged, there is a tacit understanding between the two. William is leaving for college, where he is to pass his last year in his medical studies, to return at the end of this season a full fledged medical doctor. It is at this parting that their betrothal takes place, he promising to return and make her his wife. This is the happiest moment of her life, despite the thought that they are to be separated for a long school session. This dream of happiness has a rude awakening at the appearance of her besotted father

demanding money for drink. However, she is ever hopeful and when later she receives a letter from William informing her of his early return, she is beside herself with joy. Hastening to William's father she finds he has a letter stating that the boy will return that same day. The old man is counting his savings figuring that the money will start his boy up in business in good shape. The letter received by the father contained a photograph of the boy in his graduation clothes. Of this the old man is very proud and hastens out to show it to his friends in the village. In his haste he falls and injures himself. This accident occurs outside Mary's home and she takes him in and cares for him there. The old man's first thought is the money and he insists upon going back, but Mary realizing that it would prove disastrous for him to make the journey in his condition, volunteers to get it and bring it to him. To this he consents, and she leaves, at the same time sending for medical aid for the injured man. On her way back with the money she meets her father, who guessing the contents of the bag, his cupidity is aroused and he plans to get it. Following her at a safe distance he peers through the window and sees her hide it under the mattress in her bedroom. Here he evolves a scheme. Securing the coat and hat of his chum, whom he somewhat resembles, he masks his face with a handkerchief, effects an entrance through the window and is about to make off with his loot when surprised by his daughter with a pistol. She secures the bag and forces him out at the point of the gun, intending to take him to the lock-up, of course imagining him to be her father's chum. On the way they are met by William, who has just alighted from the train and he, tearing the mask off, discovers the identity of the thief. What a blow this is to the poor girl, and seeing the money safe in the old man's hand, she, broken by the disgrace, makes a desperate attempt to leave the place. William, however, will not blame her for her father's deed and hastens after her to renew and put into effect the promises he made before leaving for college, realizing that she needs his protection now more than ever.—997 feet. Released February 23.

Pathé

BETTY'S APPRENTICESHIP.

The irresistible Betty is taken out by her mother, who finds that home is a poor place to keep such a wild and turbulent spirit. The fond mother gets Betty an apprenticeship in a millinery shop. Everyone can imagine the result, and in short order the poor girl is looking for another position. The shoemaker's, pastry cook's, hardware shop and grocer's, are all the scenes of her clever pranks. How she substitutes a toy balloon for a nice Edam cheese, which flies into space when the poor clerks attempt to sell it, is too funny for description. The entire film shows Betty at her best.—689 feet.

PINEAPPLE CANNERY IN CHINA.

The various stages for preserving the familiar tinned pineapple are amply illustrated in this film in scenes glowing with color. The prettiest scene of all no doubt, is the first, in which is represented the gathering of the pineapples, their spiny leaves making a mass of dull, soft green. The preparations for the preserving of the fruit, either whole or chopped into chunks, follows, and after the tins are filled with syrup, they are properly soldered. Colored printed labels are then rapidly affixed, and the tins are packed, their contents to be served up in due course as a table delicacy in some colder clime.—315 feet. Released February 13.

A WESTERN COURTSHIP.

A cow puncher is deeply in love with the daughter of the ranchman for whom he works, and the course of true love runs smooth until a tenderfoot from Boston makes his appearance in all the finery produced by an eastern tailor. The susceptible girl falls quickly in love with the easterner, much to the disgust of the rough son of the west. At a dance the cowpuncher finds himself left decidedly alone and finally decides to take desperate measures to regain the regard of his erstwhile sweetheart. Holding up the entire party with two big revolvers, he compels the girl to accompany him, and the two on the back of a single horse take a wild ride across the snow covered ground to the nearest clergyman's house. They are hotly pursued, however, and before the marriage is consummated the crowd bursts into the room. When the girl sees her lover about to be ill-treated at the hands of the outraged crowd, her old regard for him springs into being, and using one of her lover's pistols, they hold the crowd at bay while the thoroughly frightened minister performs the ceremony, and all ends happily.—715 feet.

THE AXOLOTL.

The study of natural science by easy methods is once more demonstrated by this most interesting of films. Its subject, the Axolotl, is a small animal belonging to the batrachia, or frog-fish order, which is one of the lowest reptillian orders. The distinguishing feature of the Axolotl is that it retains its gills through life, these gills enabling it to breathe in the water. The Mexican Axolotl, which has reached a more advanced stage of evolution, possesses lungs in adult life, and for the purposes of comparison we have pictures of both the gill-breathing and lung-breathing Axolotl. The major portion of the film is, however, devoted to the birth of an Axolotl. Reproduction takes place by eggs, and the eggs, at first mere masses of a gelatinous substance, with a tiny embryo in the center of each, appear on the screen in their successive stages of development. The embryo takes a month to develop, but at the end of a fortnight the first movements of life are observable. These movements are involuntary and are perfectly regular. Towards the end of the month the gills appear on the head of the now almost fully-developed tadpole of the Axolotl. There is also a marked change in the movements which at this stage are abrupt and voluntary. The actual birth of the Axoloti is next shown in pictures remarkable for their wonderful vividity. The egg, highly magnified, is shown, as well as the sudden upward spring with which the tadpole, eager for life amongst its fellows, leaves the egg. The adult stage of the animal is not reached before the end of the year, and by that time it possesses clumsy webbed feet; pictures of the animal at the period of full growth are shown, and other pictures of different varieties of the Axolotl conclude a film of most pleasurable interest.—266 feet. Released February 15.

WHIFFLE'S DOUBLE.

Whiffles is in love, but being a bashful and timid youth, he does not make great progress at the home of his inamorita. In vowing his passion on his knees before the girl he hopes to make Mrs. Whiffles, he knocks over and breaks a valuable vase. In his consternation he takes his leave to replace it. Immediately after his departure, there enters Whiffles dressed in the clothing of a shoemaker with a pair of shoes for Mademoiselle's mother. The family is astonished, then angry, then they think it a great joke, and when the shoemaker protests that he is nothing but a shoemaker, their humor turns again to wrath, and they throw the gentleman out of the window, much to his great discomfiture. Scarcely could he have touched the ground when Whiffles returns with the vase which he had broken, and is immediately seized and thrown out after the manner of his former exit. Of course Whiffles is not Whiffles, and yet Whiffles is Whiffles, and just how Whiffles is both Whiffles and not Whiffles is best explained by seeing the film, which would be spoiled by the telling.—499 feet.

A BOY'S WIT.

A French peasant and his wife leave their little baby girl to the protection of their elder child, a boy about ten years of age, whilst they go to their toil in the fields some distance away. During their absence, the children are startled by the sound of heavy blows on the door and harsh voices demanding admittance. The boy immediately and correctly divines that a band of roughs are endeavoring to force their way in to steal what few possessions his parents may happen to have. He is badly scared, for he is well aware that the wretches are not likely to stop at even inflicting bodily harm upon his little sister in the event of her calling out. His thoughts move quickly, and in a few moments his resolution is taken. He must fetch the gendarmes! So stopping only to enjoin his sister to feign sleep, and to assure her that all will be well, he leaps out of the window and runs as fast as his short legs will carry him to the constabulary. Meantime, the little girl, half dead with fright at the entry of the thieves, does her best to feign sleep. Once a sneeze almost betrays her, but luckily the men seeing her eyes to be tightly closed, continue to ransack the humble little habitation. They have almost finished their work when the parents return, and they find themselves caught red-handed. A desperate struggle takes place between them and the father, in which the latter finds their superior numbers heavy odds. His case looks almost hopeless, when a joyous cry from his wife announces the appearance of the gendarmes, and in another few minutes the roughs are overpowered, whilst the plucky youngster with his arms around his sister lavishes kisses upon her in his joy at her escape.—462 feet. Released February 17.

LIEUT. SCOTT'S NARROW ESCAPE.

Lieut. Scott is watering his horse at a stream, when he is approached by a beautiful Indian maid. It is love at first sight, and leaving his horse, the young officer strolls off with Yellow Moon. A young Indian brave seeing the horse untethered and alone, approaches, and finding the officer's army Colt hanging on the saddle, examines it. It goes off unexpectedly and the Indian is killed. The shot recalls Scott and the balance of the Indian tribe, who, of course, blame the lieutenant for the death of their tribesman. There is a general uprising among the Indians, but Scott makes his escape to headquarters. Thoroughly aroused, the Indians take to the war-path and completely annihilate a detachment of cavalry. Scott is sent with reintorcements and is captured. Yellow Moon, however, rides for help and arrives just in time to save the young officer's life, as the Indians have him bound to a stake and are building a fire about him.—984 feet. Released February 18.

Essanay

THEIR WEDDING GIFTS.

Jack and Jennie are married and after a very pleasant wedding festival they find that they have time to examine the many presents presented them by their friends. Much to their surprise and dissatisfaction they find that the gifts run chiefly to clocks and lamps, five or six of each and all of the same pattern. After the last guest is gone a messenger boy leaves another package, which, upon being opened, reveals another clock. To return them to their friends to have them exchanged seems only like annoying these latter, and in the end they decide to make the exchange themselves. The next morning with a basketful of lamps and clocks they drive to a pawn shop where they make known their desires, but a clerk who has just

entered, points out a column in the morning's paper regarding the robbery of a downtown jeweler's by a man and woman wearing auto apparel. Jack and Jennie quite fill the description and the proprietor loses no time in calling a policeman and having them arrested. After being hauled off to the police station, followed by a jeering mob, Jennie's father comes to the rescue, but is unable to effect their release until the real crooks are captured and brought in.—580 feet.

JUST AS THE CLOCK STRUCK NINE.

Tony Costello, an Italian fruit dealer of the better class, has just married and he and Maria, his wife, are devoted to each other as two turtle doves. For three short months not even the most microscopic speck blots the horizon of their happy existence until one night Tony is detained at his shop past his usual hour of home-coming and Maria, of course, suspects the worst. Left alone Maria begins to fear burglars. Once she hears a rattling at the back door and another time some other mysterious noise. Maria is

ingenuous and finally devolves the really clever plan of masquerading as a man, believing that no burglar would enter where there was a man in the house. This she does, appropriating her husband's clothes and has just finished her disguise when Tony comes home. She thinks him a burglar,

he thinks her his wife's lover. He finally breaks down the door and enters to kill the betrayer of his home, but it is not long after that the mystery is cleared up and both again are happy.—412 feet. Released February 21.

THE OUTLAW AND THE CHILD.

The scenes of this photoplay were obtained in the heart of the great Mojave desert of California. Dan Warrington, an outlaw, is captured by the sheriff, after the former had held up a stage coach, and is sent to jail. After the sheriff has placed his captive under guard he goes home and is welcomed by his little daughter, a child of five. Not long after the sheriff is notified of the escape of Warrington which was effected through the aid of some friend of the outlaw. The sheriff leaves the little girl at home asleep, but an hour later the little one, awakening, finds her father gone, and in anxiety for his welfare determines to go out and hunt him. With her dolly in her arms she wanders out of town and into the desert, unmindful of the dangers in her path. In the meantime the sheriff and the posse are shown in a spirited pursuit of the escaped bad man, who succeeds in eluding them. The officers of the law give up the hunt and the sheriff returning home finds his little daughter gone. The alarm is soon spread and a search party, headed by the sheriff, starts out to seek the lost baby. The little girl by this time has become lost in the desert and is unable to find her way back home. At noontime, under the torrid sun, she sinks into the burning sands, where she is found by Warrington, who sacrifices the water in his canteen to save her life. He then carries her back to her father's door, but the ordeal has been too much for him and he lapses off into an unconsciousness from which he is never revived.—1,000 feet. Released February 25.

THE OLD MAN AND JIM.

Champion

The old man never had much to say excepting to Jim, and Jim was the wildest boy he had. The old man knew and so did everybody in the town, including the lady's own husband, that Jim loved his neighbor's wife. But Jim didn't care and the old man was so completely wrapped up in him that he closed his eyes to the wildness of the lad. Nine sons, and Jim was the wildest of them all. Then came the news of the war that was soon to break out between North and South. And the inevitable happened. The lady's own husband saw Jim attempt to kiss his wife and she permitted him to try. A row that resulted in a disgraceful fight was precipitated, and while the husband lay stunned and bleeding upon the floor, the news was thrown like a bomb upon the excited crowd in the room. "The war has broke out!" The war, that terrible but necessary slaughter of brave men, was begun, and Jim was the first to go. Some wagging tongues suggested that he had to, to escape the result of his terrible deed. However, Captain Bigler soon wrote back that Jim was the bravest man in the whole regiment, white or black, that his fighting was as good as his farming was bad, and he'd carried the old flag through the bloodiest fight that ever was. The Old Man worded a letter to Jim and Jim read it to the boys. It said: "Good-bye Jim, take care o' yerself." Then came the battle before Petersburg, General Grant commanding. The boys in grey lay behind their entrenchment and literally mowed down the lads in blue. Then the spark leapt into Jim's soul. For he dashed with his men right up to the enemy's cannon, took them, pointed them the other way and socked it home to the boys in grey, as they hurried for timber, on, and on. Jim, a lieutenant with one arm gone. No battle in those terrible times was fiercer. Upon a heap of piled up corpses, grey and blue, brothers dead as once in life; wounded unto death with the dear beloved flag held tight in his hand, lay our hero Jim. While his life blood ebbed away, there appeared to him a vision of the first great father of Liberty, George Washington, and by his side stood the Father of Emancipation, Abraham Lincoln, for whom Jim lay there dying, and between these two great fighters for freedom stood Liberty herself—resplendent in her robes of Freedom. Blessing the stricken boy, the Vision faded, and Jim with an effort rises to his feet, climbed to the top of the dead and waving the beloved flag, he calls to them to awaken and come on to battle. Furiously waving the tattered flag he falls back into the arms of General Ulysses S. Grant and some of his aides. Think of a private like Jim who ha sclimbed up to the shoulder straps. Think of him with the war all through and a glorious old red, white and blue covering him; the old man standing over him; everybody turning away with tears. And, as the hand of the dying boy clings to his father's, the old man's voice rings in his ear, "Well, good-bye Jim, take care o' yerself."—1,000 feet. Released February 22.

Among the Picture Theaters

FROM OUR CORRESPONDENTS.

KENTUCKY.

Louisville motion picture houses are entering upon what promises to be an exceedingly prosperous trade year. One picture show manager, statistically inclined, stated that he had noted a definite increase of 40 per cent in his receipts for the first week of 1911, as compared with the initial seven days of 1910. This favorable condition is apparently prevalent in the ranks of the theaters.

The Princess Amusement Company recently opened a handsome vaudeville and motion picture house at Jacksonville, Fla., the new theater being called The Princess.

Hopkins Theater, at First and Market streets in Louisville, is now running a show consisting of six vaudeville acts and two rolls of films instead of only five acts and one film, as formerly. The present price schedule at Hopkins is 10 cents for matinee and 10 or 15 cents for night exhibitions.

The Princess Amusement Company recently featured a novel ad in an advertising contest of The Louisville Herald. The names of the advertisers in the contest were omitted and some pertinent question was asked that would lead the contestant to a determination of the identity of the advertiser, cash prizes being offered by the Herald for the correct solution of the problem. The Princess concern's ad demanded that the contestant give the names of two popular motion pictures houses (The Orpheum and the Casino), both operated by the same company (The Princess firm).

The Louisville Courier-Journal, one of the leading papers of the South, recently printed a long editorial commenting upon and generally commending the action of the authorities at the Kentucky Asylum for the Insane at Hopkinsville, Ky., in providing a series of moving picture exhibitions for the edification and enlightenment of the insane. The Courier's comment ended with the following:

"The world is full of paradoxical things. It seems easily susceptible of proof that a lot of otherwise sane people are daft about moving pictures. It is not impossible that the fascinating films should have a reverse effect upon people who are not sane."

Films of the Passion Play and other interesting subjects were recently run off at the State Reform School at Lexington, Ky., for the education of the reformatory youngsters and were met with such appreciation that the boys and girls voted to allow their holiday dinner to grow cold rather than cut short the exhibition of the pictures.

A fire insurance rating bureau in Louisville recently issued a pamphlet dealing with moving picture show fire risks and the modus operandi that should be followed by insurance raters in fixing a schedule for various theaters. The information given out by the fire rating association to its raters dealt mainly with the exercise of a little "horse sense" in rating picture houses. It was urged that raters pay particular attention to the combustibility of films used in the shows, inasmuch as a "slow-burning film" minimized the fire risk to a great extent and made it imperative that a lower insurance rate be assessed where "slow-burners" are in use.

ADD TO ROLL OF THE STATES

CALIFORNIA.

Those engaged in the making and production of motion pictures in southern California propose to organize themselves into an association for mutual protection, and to this end recently held a meeting in Long Beach.

COLORADO.

A. H. Buckley is preparing to open a moving picture theater in Longmont. Mr. Buckley proposes to conduct a first-class house, for he believes that nothing in the shape of a moving picture entertainment will pay steadily except the best, both in house and equipment. The house will be well ventilated, well warmed in winter and pleasant in summer.

ILLINOIS.

Lagrille & Middleton, of Muscatine, Iowa, have leased a room in the Academy of Music block, in Sterling, which they will convert into a first-class moving picture theater. It is the intention of the new firm to present the very latest in

the moving picture line, and owing to the excellent location of the house it will certainly be well patronized.

The Herbst Bright Light Motion Picture Company has filed articles of incorporation with the secretary of state. The capital stock is $2,000 and it is the purpose of the company to deal in moving picture machines. The incorporators are B. Cortelyou, J. C. Elias and H. A. Robinson.

Bloomington is to have a new vaudeville theater which will have a seating capacity of 1,500, which is larger than any theater in the city with the exception of the Coliseum. It is proposed to have a stage large enough to accommodate any attractions, although the house will be devoted to vaudeville. The builders are the F. & H. Company, lessees of the Chatterton theater of that city.

The Princess is the name of a new moving picture theater recently opened at Cuba under the management of Messrs. Wiley and Jacobs.

O. G. Brown has opened a moving picture theater in Plainfield and the same will be under the management of Martin Moran. It is the purpose of the management to give the people of Plainfield a nice, clean entertainment.

Henry Clopine and Arthur Anglemeir of Compton have purchased a first-class moving picture outfit with which they propose to entertain the public. At present they occupy the opera house once per week and later twice a week.

The Liberty theater, 329 South Adams street, Peoria, has been closed for the past two weeks, undergoing extensive remodeling and improvements, which will include a French plate glass mirror front with an ante lobby of Moorish design, hung in rich tapestries, the interior to be of Old Mission design. The improvements will cost in the neighborhood of $3,500 and when completed will make the Liberty one of the most magnificent five-cent theaters in the Middle West, and one of the most novel places of its character in the country. Messrs. Robinson and Zahler are the owners, and with the reopening of the house promise to present only the highest standard of moving pictures and musical numbers.

The Crystal Theater of Tuscola, formerly owned by G. H. Miller, has been purchased by J. S. Quirk, manager of the Olympic Theater of Arcola, who will conduct both houses.

The Princess, a handsome new picture house, is the latest addition to Galva's amusement places.

A moving picture theater was recently opened at Brighton by Messrs. W. H. Robbins and W. G. Hunt.

The management of the Lyric moving picture theater of Freeport has inaugurated a moving picture show which will be put on the road. The circuit will include six towns in northern Illinois and southern Wisconsin and an exhibition will be given in each of these places once each week. An orchestra of six pieces will accompany the show.

The Clifton is the name of a handsome and attractive new moving picture theater erected at Wilson and Clifton avenues, Chicago, by Richard L. Crescy, manager and owner, which will be opened to the public in a few days. Mr. Crescy has expended about $40,000 on this house which will be devoted exclusively to moving pictures. The house has a capacity of 300, is seated with opera chairs, is handsomely decorated and thoroughly fireproof.

INDIANA.

George Maurer has purchased of Messrs. Sam Steigerwald and William J. Schmidt the moving picture theater operated by them on Main street, between West and Mulberry streets, Madison, and after thoroughly remodeling and improving the house will conduct it as a first-class moving picture theater. As Mr. Maurer is a hustling young business man no doubt success will crown his efforts.

Hugh McGurty and Martin Murphy, of Brazil, have opened a first-class moving picture theater in that place which compares favorably with houses of its kind in much larger cities.

The business block at 117 South Michigan street, South Bend, will be converted into what it is claimed will be the finest and largest moving picture house in the city. The house will be known as the "Surprise" and will be under the management of the Surprise Theater Company, of which Ezra Rhodes is president.

Warner Schmidt, who owns and operates the Princess and Theatorium theaters in Newcastle, will open a new moving picture theater in the Abercrombie building on West Second street, Rushville. Mr. Schmidt has had considerable experience in the moving picture business and expects to install a modern, up-to-date house.

The contract has been let for the construction of a new moving picture and vaudeville house at Bloomington at a cost of $6,000. The house will be of brick with metallic front and trimmings. It will be provided with two moving picture machines, a mirror screen, a piano and a pianola. The house will be seated with upholstered chairs and the estimated cost of the electrical display alone is $3,500. The enterprise is backed by local capital.

The Family and Globe moving picture theaters of Covington, have been purchased by L. C. Parker, of Indianapolis.

The Star is the name of a new moving picture theater which was opened at Vincennes on the 28th ult. under the management of Theodore Charles, of Waukegan.

The Gem is the name of a new moving picture theater opened at Goshen under the management of Hal Harrington.

The Colonial theater at Vincennes has been purchased by Theodore Charles, who will thoroughly remodel and enlarge the house and will conduct it as a high grade moving picture theater under the name of the Star.

IOWA.

The Princess Amusement Company has opened a moving picture theater at Oskaloosa which is up-to-date in every particular, both as to equipment and program. It is under the supervision of Chris Malone.

Chas. Howe is making arrangements to open a moving picture theater in the Ayres building at Enterprise.

The Malvern Electric Theater of Malvern, formerly owned and operated by G. A. Piatt, has been purchased by L. H. Zanders.

After being thoroughly renovated the Family Theater of Des Moines has been reopened. One of the additions to the house was a new picture screen, which was made after a plan originated by J. Miloslowski, manager of the house. The materials used in its construction were secured from Germany and were very expensive. At each performance the old screen will be shown in contrast to the new one.

O. E. Dunn is preparing to open a theater at 310 Jackson street, Sioux City, which will be devoted to vaudeville and moving pictures.

A first-class vaudeville house, the Princess, will be opened at Mason City under the management of Messrs. Arthur and Heffner.

William Englert, who recently purchased the Bijou Theater at Iowa City, plans to erect a $25,000 moving picture and vaudeville house in that city. For this purpose he has purchased a site in the main part of the city at a cost of about $12,000. No expense will be spared in making this a model theater, thoroughly equipped with all modern improvements.

J. Jolly Jones, formerly manager of the Magic Theater of Waterloo, has taken over the Waterloo theater of that city, which will be remodeled and improved and conducted as a high grade moving picture and vaudeville house.

The Bijou Theater at Ida Grove has been purchased by L. A. Horn, who will thoroughly remodel the same and conduct as a high grade moving picture house.

The Star Theater of Centerville has been purchased by G. E. Morrow.

KANSAS.

What is claimed will be the largest and best equipped moving picture house in the West will be opened in Topeka, at the corner of Seventh and Quincy streets, under the management of Paul Mulvane and J. W. Elliott. It is proposed to have the place ready to open to the public about March 1st. The house will have a seating capacity of about 800 and will be fitted with a stage and a sloping floor. Opera chairs will be installed. The very latest methods of ventilation will be used. The new theater will be devoted exclusively to moving pictures. Mr. Elliott is now manager of the Aurora theater, of which he has been in active charge for the past three years.

C. B. Yost, of Hutchinon. has sold his interest in the Elite theater, which he has been managing, to Wayne Martin, manager of the Pearl theater, who has also been associated with him at the Elite.

The Joy theater of Independence, formerly owned and operated by Messrs. Day, Compton and Snyder, has been purchased by R. R. Painter.

The Crystal Theater at Pittsburg has been purchased by Messrs. Ryan and Atkinson, who will remodel the same and conduct it as a first-class moving picture theater.

LOUISIANA.

The Princess is the name of a new and splendidly equipped moving picture theater recently opened at Alexandria, at the corner of Second and Washington streets, said to be one of the most complete of its kind in the state.

MARYLAND.

The Little Gem Theater of Linton, formerly owned and operated by William Ham, has been purchased by John L. Wright.

The Royal Amusement Company has awarded to Adam Krazt the contract for the erection of a modern moving picture and vaudeville theater at 1940 and 1942 West Pratt street, Baltimore. The house will be of brick and stone with metal trimmings.

MASSACHUSETTS.

The Star is one of the latest additions to Brookfield's moving picture theaters. It occupies the old Union church building on Main street, which has been remodeled at a cost of $4,000.

The New Dream is the name of a moving picture theater which was recently opened at Saugus.

MICHIGAN.

Plans have been completed for the erection of a new vaudeville theater in Jackson, W. S. Butterfield of Battle Creek being back of the enterprise. The house will cost approximately $50,000 and will have a seating capacity of 1,300. Work will begin in the spring.

The Paris theater, of Sturgis, which has been closed for some time, will be remodeled and enlarged and will be reopened as a moving picture and vaudeville house, with occasionally other attractions.

MISSOURI.

An effort is being made to limit the downtown moving picture theaters to about four, instead of the eleven now existing in the area bounded by Broadway, Washington avenue and Market and Eighth streets, St. Louis. It is stated propositions have been made looking forward either to mergers or purchases. It is claimed that eleven houses are too many for the limited area. Already two of the principal moving picture houses have been merged into one company, which will be known as the Bijou-Casino Amusement Company. The officers are as follows: President, O. B. Welk; vice-president, Frank R. Tate; secretary, William McLaren. The theaters which merged are the Casino, on Olive street, near Sixth, and the Bijou, at Sixth street and Washington avenue. It is said to be the purpose of the new company to acquire several of the downtown amusement places.

The Opera House at Plattsburg has been fitted up with a steel, fireproof booth for moving pictures. Two shows will be given nightly with change of pictures each night.

MONTANA.

The Imperial and Alcazar moving picture theaters of Anaconda have been leased by Paul Noble.

NEW JERSEY.

A new moving picture and vaudeville theater will be erected on East Jersey street, between Fifth and Sixth streets, Elizabeth. The building will be of cement block construction and will have a seating capacity of between 400 and 500.

The Lyceum of Red Bank has been opened as a moving picture house.

Bernard Avidon is planning to erect a moving picture theater at 193 Spruce street, Newark, which will cost about $6,000.

The Central Palace is a recent addition to Trenton's moving picture houses, the same having been opened at Market and Lamberton streets by Nathan Spencer.

NEW YORK.

Louis Decker has been granted permission to erect a moving picture theater at 909 Jefferson street, Buffalo, at a cost of $4,500.

L. H. Bowers, proprietor of the Snyder Hotel of Waverly, has leased property on Main street, which he is having converted into a first-class moving picture house. The house will be seated with opera chairs and will be supplied with Powers' latest model picture machine.

NORTH DAKOTA.

Messrs. Bauer and Rehfield, proprietors of the Orpheum theater of Bismarck, have redecorated their house and the benches have been replaced by comfortable opera chairs. They have also installed a new picture machine, all of which adds greatly to this popular house.

OHIO.

Messrs. Feiber and Shea, who operate the Princess moving picture theater at Youngstown, announce vaudeville will be added to the program. They will also continue to present the best films on the market.

The Lyric, Lima's latest vaudeville and motion picture house, was opened on the 6th inst. The new theater is complete in every way; every precaution and every modern design has been used in providing for the comfort and safety of the patrons. The policy of the house is to give the best show obtainable for the money, the object being to give the patrons high class vaudeville at popular prices. Five strong feature vaudeville acts, and latest motion pictures will compose the program.

The Happy Hour theater of Akron has been taken over by a stock company and will be operated as such under the name of the Family theater.

PENNSYLVANIA.

Messrs. Carr and Shad, proprietors of the Victor theater of Reading, have just completed extensive improvements to the interior of their theater. While not of the largest it is one of the finest and best equipped theaters in the country. One of the new features just installed is the patent glass mirror screen, being a beautiful plate glass mirror, 12x16 feet, said to be the largest piece of plate glass in the state. Another feature is the new lighting system, which permits the auditorium being fully lighted during the showing of the pictures.

The Bijou moving picture theater at Allentown has just undergone extensive improvements.

The Savoy, an exclusive moving picture house recently opened at Shamokin, bids fair to become one of the most popular houses of its kind in that city. The house is thoroughly equipped, no expense having been spared to insure the comfort and pleasure of its patrons.

Permission has been granted for the erection of a moving picture theater at 2640 Kensington avenue, Philadelphia, by John Kroell.

The Pastime is the name of another new moving picture theater that has been added to the amusement places of Chambersburg. It is located at 519 Locust street and is under the management of J. W. Knaussan, an experienced man in the business, who promises his patrons a high grade entertainment.

Messrs. Lashner and Friedman will erect a $12,000 moving picture theater at 1332 South Fifth street, Philadelphia.

George Panagotacos of Johnstown, is planning for the construction of a moving picture theater in that city.

A handsome moving picture and vaudeville house, the Orpheum, was recently thrown open to the public at Lewiston, by D. Dughi, owner of the same, under the management of T. A. Reily. The building is three stories. The second story will be devoted to office purposes and the third will be occupied by the manager. The house has a roof garden which will be used during summer.

The Hippodrome Theater, which was recently opened to the people of Morristown, located on Penn street, near Eighth, has a seating capacity of 1,800. The house will be devoted to high class vaudeville and moving pictures and will be under the management of M. Sablosky.

The Opera House at Scranton will be converted into a moving picture house, which will be conducted by the Opera Amusement Company.

The Great Northern Amusement Company of Philadelphia, is planning to erect a vaudeville and moving picture theater at Kensington avenue and Lehigh avenue, in that city, at a cost of $25,000, which will have a frontage of 60 feet and a depth of 150 feet.

TEXAS.

The Majestic theater, a moving picture house of Bonham, was recently opened to the public in that city.

The Texas Film Exchange of Dallas has increased its capital stock from $50,000 to $55,000.

WISCONSIN.

The Dreamland theater of Glena has been purchased by Messrs. Calvert and Kramer, who will convert it into a first-class moving picture house.

The Majestic is the name of a new moving picture theater recently opened at Rhinelander, with a seating capacity of 250.

The Orpheum Amusement Company of Kenosha has been incorporated with a capital stock of $2,000. The directors of the company are G. T. Rugg, Philip Pollack and M. L. May.

The Happyland Theater, formerly owned and operated by J. E. Mitchell, at Fond du Lac, has been purchased by Barnes Brothers, who will conduct it as a high grade moving picture and vaudeville house.

A moving picture theater will be opened at Mellen by F. Schubinsky, of that place, and Prof. Steinmetz of Superior.

Record of Current Films

Believing the classification of film pictures by the nature of their subjects to be of greater importance to the exhibitor than classification by maker, The Nickelodeon has adopted this style in listing current films. Exhibitors are urged to make use of this convenient tabulation in making up their programs. Films will be listed as long in advance of their release dates as possible. Film manufacturers are requested to send us their bulletins as early as possible. Reasonable care is used, and the publishers cannot be responsible for errors.

LICENSED

Date.	Title.	Maker.	Length.
	DRAMA		
1-23	Fate's Turning	Biograph	998
1-24	An Eventful Evening	Edison	
1-24	A Sin Unpardonable	Essanay	1,000
1-24	The Twilight of a Soldier's Life	Gaumont	945
1-25	Saved by Telegraphy	Pathé	720
1-25	The Sailor's Return	Eclipse	689
1-25	The Secret of the Still	Kalem	950
1-26	How Mary Met the Cowpunchers	Melies	980
1-26	Father Love	Lubin	1,000
1-26	The Spy	Selig	
1-27	Girl of the Mountains	Vitagraph	
1-27	The Black Bordered Letter	Edison	1,000
1-27	Puritans and Indians	Kalem	970
1-27	Il Trovatore	Pathé	970
1-28	The Two Reformations	Essanay	
1-28	The Baby Fortune Hunters	Gaumont	682
1-30	The Little Circus Rider	Selig	
1-30	The Escape from the Tuileries	Pathé	1,000
1-30	A Wreath of Orange Blossoms	Biograph	993
1-31	Jean Rescues	Vitagraph	970
1-31	The Last Curtain	Gaumont	823
2-1	The Sheriff's Sister	Kalem	1,000
2-1	Disinherited	Eclipse	990
2-2	Age vs. Youth	Lubin	1,000
2-2	Curse of the Red Man	Selig	1,000
2-2	Only a Sister	Malies	980
2-2	Three Sisters	Biograph	997
2-3	Selling Old Master	Edison	990
2-3	The Trail of the Pomos Charm	Kalem	1,005
2-3	The Slave's Revolt	Pathé	722
2-3	Society and the Man	Vitagraph	880
2-4	A Cowboy's Devotion	Pathé	1,000
2-4	Carmenita, the Faithful	Essanay	995
2-6	Heart Beats of Long Ago	Biograph	997
2-7	The Doctor	Edison	1,000
2-7	The Deluge	Vitagraph	
2-7	The Strongest Tie	Gaumont	605
2-8	Little Sister	Kalem	970
2-8	Legally Dead	Pathé	1,000
2-8	On the Border of the Forest	Eclipse	895
2-9	Tony the Greaser	Melies	980
2-9	Thelma	Selig	1,000
2-10	The Missing Bride	Pathé	800
2-10	His First Commission	Edison	990
2-10	The Broken Trail	Kalem	1,000
2-10	The League of Mercy	Vitagraph	
2-11	Silver Leaf's Heart	Pathé	1,000
2-11	At the White Man's Door	Vitagraph	
2-11	The Bad Man's Downfall	Essanay	1,000
2-11	Napoleon in 1814	Gaumont	797
2-13	What Shall We Do with Our Old?	Biograph	994
2-13	A Show Girl's Stratagem	Lubin	1,000
2-13	The Survival of the Fittest	Selig	1,000
2-14	The Rajah	Edison	1,000
2-14	Consuming Love	Vitagraph	
2-15	Catherine Howard	Eclipse	1,005
2-15	Grandmother's War Story	Kalem	975
2-15	A Western Courtship	Pathé	734
2-16	Fisher Folks	Biograph	998
2-16	The Buccaneers	Selig	1,000
2-16	Billy and His Pal	Melies	980
2-17	A Stage Romance	Edison	
2-17	The Lost Ribbon	Kalem	1,000
2-17	When the Light Waned	Vitagraph	
2-17	A Boy's Wit	Pathé	462
2-18	Lieut. Scott's Narrow Escape	Pathé	1,000
2-18	The Cattleman's Daugher	Essanay	1,000
2-18	Saul and David	Gaumont	128
2-18	At the End of the Road	Gaumont	838
2-20	The Diamond Star	Biograph	996
2-20	The Padre	Selig	1,000
2-20	The Test	Lubin	1,000
2-20	A Soldier	Pathé	761
2-21	The Rival Sculptors	Edison	990
2-21	The Plot that Failed	Gaumont	815
2-21	A Tale of Two Cities—Part 1	Vitagraph	
2-22	The Open Road	Kalem	995
2-22	The Golden Sickle	Eclipse	882
2-23	His Daughter	Biograph	997
2-23	My Prairie Flower	Melies	980
2-23	The Seminole's Sacrifice	Selig	
2-24	The Price of Victory	Edison	1,000
2-24	Priscilla and the Pequot	Kalem	925
2-24	A Tale of Two Cities—Part 2	Vitagraph	
2-25	The Outlaw and the Child	Essanay	1,000
2-25	A Tale of Two Cities—Part 3	Vitagraph	
2-25	The Changeling	Pathé	1,000
2-25	Paganini and the Countess Beatrice	Gaumont	998
	COMEDY		
1-23	Father Makes Himself Useful	Lubin	975
1-23	How Max Went Around the World	Pathé	633
1-23	A Robust Patient	Selig	1,000
1-23	Gasoline for a Tonic	Pathé	361
1-24	It Did Look Suspicious	Vitagraph	
1-25	The Lover and the Count	Edison	995
1-25	Whiffles' New Sleeve	Pathé	282
1-26	The Poor Sick Men	Biograph	991
1-28	Davy Jones in the South Seas	Vitagraph	
1-28	Father Against His Will	Pathé	720
1-28	Betty Rolls Along	Pathé	289
1-30	His Bogus Uncle	Lubin	1,000
1-31	The Jilted Joker	Essanay	640
1-31	Hank and Lank—They Make a Mash	Essanay	366
2-1	Bumptious as Romeo	Edison	975
2-1	Hearts, Hunger, Happiness	Pathé	690
2-4	A Queen for a Day	Vitagraph	995
2-4	Jiggers Looks for a Job	Gaumont	537
2-6	A Double Elopement	Lubin	990
2-6	Max Has the Boxing Fever	Pathé	561
2-6	Too Much Mother-in-Law	Selig	1,000
2-6	An Imitator of Blondin	Pathé	400
2-7	A Woman's Voice	Essanay	
2-7	Ten Words for Twenty-Five Cents	Essanay	
2-7	Jiggers' Moving Day	Gaumont	895
2-8	Two Valentines	Edison	1,000
2-9	Priscilla's Engagement Kiss	Biograph	997
2-9	The Petticoat Sheriff	Lubin	1,000
2-13	Betty's Apprenticeship	Pathé	689
2-14	Getting Sister Married	Essanay	1,000
2-14	The Reformation of the Suffragettes	Gaumont	665
2-15	The Ransom of Red Chief	Edison	
2-16	Getting Even	Lubin	600
2-16	Schultz Has the Smallpox	Lubin	400
2-17	Whiffle's Double	Pathé	499
2-18	The New Stenographer	Vitagraph	
2-21	Their Wedding Gifts	Essanay	580
2-21	Just as the Clock Struck Nine	Essanay	412
2-22	Mr. Bumptious, Detective	Edison	990
2-22	Hubby's Troubles	Pathé	672
2-24	Who Killed Max?	Pathé	689
	SCENIC		
1-24	Firemen's Parade	Vitagraph	
1-25	Scenes in Jersey Island	Eclipse	296
1-28	Gorges of the Bourne	Gaumont	293
1-31	At Eventide	Gaumont	173
2-4	Krimmel Waterfalls	Gaumont	435
2-10	Review of Chilean Troops	Pathé	180
2-11	Autumn Leaves	Gaumont	185
2-13	Pineapple Cannery in China	Pathé	315
2-14	Land Marks of Avignon	Gaumont	338
2-22	Felling a Smoke-Stack	Eclipse	113
	INDUSTRIAL		
2-1	Practical Brook Trout Breeding	Pathé	279
2-3	The Rice Industry in Japan	Pathé	256
2-8	Canadian Iron Center, Port Arthur	Eclipse	110
	SCIENTIFIC		
2-15	The Axolotl	Pathé	266
2-21	Pictures in Chemistry	Gaumont	175

DAILY LICENSED RELEASES.

MONDAY: Biograph, Lubin, Pathe, Selig.

TUESDAY: Edison, Essanay, Gaumont—Kleine, Vitagraph.

WEDNESDAY: Edison, Kalem, Eclipse—Kleine, Pathé.

THURSDAY: Biograph, Lubin, Melies, Selig.

FRIDAY: Edison, Kalem, Pathe, Vitagraph.

SATURDAY: Essanay, Gaumont—Kleine, Pathe, Vitagraph

INDEPENDENT

Date.	Title.	Maker.	Length.
	DRAMA.		
1-23	The Dream	Imp	1,000
1-23	The Convict's Last Chance	Yankee	
1-24	When Love Was Blind	Thanhouser	1,000
1-24	A Wife's Love	Powers	
1-24	The Red Man's Wrath	Bison	900
1-25	A Wife's Calvary	Ambrosio	500
1-25	For Remembrance	Reliancce	900
1-25	The Man in 23	Nestor	
1-25	Irish Hearts	Atlas	
1-25	Why He Went West	Champion	950
1-26	Bertie's Bandit	American	1.000
1-26	Phone 1707 Chester	Imp	997
1-26	The Revenging Picture	Itala	900
1-27	An Infamous Son	Lux	652
1-27	Trials of Bud Brown	Bison	900
1-27	Stealing a Ride	Thanhouser	
1-27	A Son of Old Glory	Yankee	
1-27	His Best Friend	Solax	
1-28	The Masqueraders	Powers	
1-28	The Last Laugh	Reliance	900
1-30	The Genius	American	965
1-30	The Taxicab Mystery	Yankee	
1-31	For My Pal	Powers	
1-31	Only in the Way	Thanhouser	
2-1	A Brass Button	Reliance	900
2-1	His Great Sacrifice	Atlas	
2-1	Judged by Higher Power	Champion	950
2-1	The Bridal Trail	Nestor	
2-2	The Mission in the Desert	American	985
2-2	Coachman of the Village	Itala	900
2-3	The Counting House Mystery	Yankee	
2-3	Adrift	Thanhouser	
2-3	A Squaw's Bravery	Bison	900
2-3	Back to the Old Homestead	Lux	944
2-4	The Command from Galilee	Reliance	900
2-4	The Cattle King of Arizona	Powers	
2-4	The Criminal Chief's Capture	Great Northern	
2-6	A Pittsburg Millionaire	American	985
2-6	Doctor Against His Will	Eclair	984
2-6	At the Duke's Command	Imp	1,000
2-6	Foiling the Camorra	Yankee	
2-7	The Half-Breed's Plan	Bison	900
2-8	Kelly, U. S. A.	Atlas	
2-8	The Transgressor	Nestor	
2-8	The Schoolma'am's Courage	Reliance	900
2-9	John Milton	Itala	900
2-10	Was She Justified?	Yankee	
2-10	The Norwood Necklace	Thanhouser	
2-10	The Salted Mine	Bison	900
2-10	The Orphan's Friend	Lux	711
2-11	Found Again	Great Northern	
2-11	The Angel of His Dream	Powers	
2-11	The Little Avenger	Reliance	900
2-13	The Elixir of Bravery	Eclair	424
2-13	Her Darkest Hour	Imp	1,000
2-13	Condemned to Death	Yankee	
2-14	For Her Sake	Thanhouser	
2-14	The Deputy's Honor	Bison	900
2-15	Coals of Fire	Atlas	
2-15	Three Men	Reliance	900
2-15	The Light Beyond	Nestor	1,000
2-15	The Demon	Ambrosio	900
2-16	In the Iand of Cactus	American	1,000
2-16	The Convert	Imp	1,000
2-16	A Heroine of '76	Rex	910
2-16	The Fatal Charm	Itala	900
2-17	Checkmate	Thanhouser	
2-17	Bronco Bill, the Brave Cowboy	Lux	639
2-17	The Warrior's Squaw	Bison	900
2-18	Under Southern Skies	Powers	
	COMEDY		
1-16	The Battered Bride Grooms	American	525
1-16	A Dental Disaster	American	450
1-16	My Wife's Hat	Eclair	482
1-16	Jealousy of Sosthenes Ramulot	Eclair	478
1-17	A Montana Love Story	Powers	
1-17	Lover's Trials	Powers	
1-17	Bertie's Brainstorm	Thanhouser	1,000
1-18	You Try It	Revier	500
1-18	The Country Girl	Reliance	900
1-18	A Tailor's Queer Advertisement	Ambrosio	500
1-19	His First Patient	Imp	500
1-19	The Rev. Goodleigh's Courtship	Imp	500
1-20	His Faithful Furniture	Lux	360
1-21	The Visit of a Friend	Itala	500
1-21	A New Kind of an Arm Chair	Itala	500
1-23	When a Man's Single	American	1,000
1-23	Painless Extraction	Eclair	508
1-23	Kill the Fly	Eclair	442
1-24	Little Dorothy	Powers	
1-25	Tweedledum Within a Cask	Ambrosio	500
1-27	Prompt Payment	Thanhouser	
1-27	Little Willie Goes Cycling	Lux	236
1-28	Triumph of Intelligence	Great Northern	
1-28	Mr. Muggins Has His Sewing Done	Great Northern	
1-28	My Son Is Guilty	Itala	900
1-30	Maid or Man	Imp	995
1-30	The Emperor's Lunch	Eclair	603
1-30	The Elusive Robber	Eclair	373
1-31	A Tough Tenderfoot	Bison	900
2-1	The Return from Seaside Bathing	Ambrosio	500
2-1	Tweedledum Tries Winter Sports	Ambrosio	500
2-2	An Imaginary Elopement	Imp	500
2-2	The Mix-Up	Imp	500
2-3	Ring of Love	Solax	
2-4	The Feast of Foolshead	Itala	900
2-7	The Westerner and the Earl	Thanhouser	
2-7	Ferdie's New Shoes	Powers	
2-8	At Double Trouble Ranch	Champion	
2-8	Tweedledum as a Detective	Ambrosio	500
2-9	On the Installment Plan	American	560
2-9	Too Much Aunt	American	430
2-9	The Mirror	Imp.	500
2-9	When the Cat's Away	Imp.	500
2-10	Mixed Pets	Solax	
2-10	That Horse Did Run	Lux	272
2-11	Foolshead at the Kinematograph	Itala	900
2-13	A Quiet Evening at Home	American	1,000
2-13	Mr. Faddleaway is on Strike	Eclair	522
2-14	An Unforeseen Complication	Powers	
2-15	Her Three Proposals	Champion	950
2-17	Corinne in Dollyland	Solax	
2-17	Her Birthday Surprise	Yankee	
2-17	Matilda Lovestruck	Lux	272
2-18	Who Will Eat the Turkey	Itala	900
2-18	The False Alarm	Great Northern	
2-18	The Life of a Muschik	Great Northern	
2-18	Souls Courageous	Reliance	900
2-21	What Would You Do	Powers	
2-20	The College Spendthrift	American	900
2-20	The Heart of a Warrior	Eclair	683
2-20	Pictureland	Imp	1,000
2-20	A Lifetime Penance	Yankee	
2-21	For Washington	Thanhouser	
2-22	The Old Man and Jim	Champion	950
2-22	A Plain Tale	Reliance	900
2-22	His Father's House	Nestor	1,000
2-23	Strategy	American	980
2-23	Artful Kate	Imp	1,000
2-23	The Story of a Prayer Rug	Rex	
2-24	Love's Test	Solax	
2-24	A Newsboy Hero	Thanhouser	
2-24	The Woman Who Dared	Yankee	
2-25	Across the Mexican Border	Powers	
	SCENIC.		
2-8	The Savoy Cavalry	Ambrosio	500
2-11	A Trip Through Mexico	Powers	
2-20	Hospital for Small Animals	Eclair	286
2-21	The Mexican Centennial	Powers	

DAILY INDEPENDENT RELEASES

MONDAY: American, Eclair, Imp, Yankee.

TUESDAY: Bison, Powers, Thanhouser.

WEDNESDAY: Ambrosio, Atlas, Champion, Nestor, Reliance.

THURSDAY: American, Imp, Itala.

FRIDAY: Bison, Lux, Solax, Thanhouser, Yankee.

SATURDAY: Columbia, Gt. Northern, Itala, Powers, Reliance.

THE NICKELODEON

$2.00 Per Year | Published Weekly by ELECTRICITY MAGAZINE CORPORATION, Monadnock Building, Chicago | 10 Cents Per Copy

Vol. V | CHICAGO, FEBRUARY 28, 1911 | No. 8

PROGRESS with "The Nickelodeon's Record of Films" has developed to the point where future announcement can be made. The work has resolved itself into a semi-annual Exhibitors' Hand Book and Film Record. It will have a free distribution, reaching all picture theaters.

¶ The first edition is ready for distribution purely as a Film Record, listing all films issued between July 1 and December 31, 1910, inclusive. The Record lists "Licensed" and "Independent" films under the makers' name and address; classifies the films chronologically, as released, giving name and length, under the sub-headings: Acrobatic, Comedy, Drama, Industrial, Nature Study, Scenic, Scientific, Sports, Topical and Trick.

¶ We want all exhibitors to have a copy. For fear we do not have your address, make your request now. The book will be sent to you promptly and without cost.

ELECTRICITY MAGAZINE CORPORATION, MONADNOCK BLDG., CHICAGO

The Nickelodeon

Published Every Saturday by the

ELECTRICITY MAGAZINE CORPORATION

MONADNOCK BUILDING, CHICAGO

Long Distance Telephone: Harrison 3014

Ed J. Mock and Paul H. Woodruff, Editors James B. Crippen, Associate Editor

New York Office: 1433 Hartford Bldg., 41 Union Square
LAURENCE F. COOK, Eastern Representative
Telephone, Stuyvesant 1672

London Office: 36 Maiden Lane, Covent Garden
S. RENTELL & CO., Representatives

Table of Contents

TERMS OF SUBSCRIPTION

United States, Cuba and Mexico, $2.00 per year; Canada, $2.50 per year; Foreign countries within the Postal Union, $3.00 per year; Single Copy 10 cents.

Distributing Agents: The Western News Company and its International Branches.

NOTICE TO ADVERTISERS

Changes of advertising copy should reach the office of publication not less than five days in advance of date of issue. Regular date of issue, Saturday of each week. New advertisements will be accepted up to within three days of date of issue, but proof of such advertisement can not be shown.

NOTICE TO SUBSCRIBERS

Remittances should be made by check, New York draft or money order, in favor of THE NICKELODEON. Foreign subscriptions may be remitted directly by International Postal Money Order, or sent to our London office. The old address should be given as well as the new, and notice should be received two weeks in advance of the desired change.

Scene from the Essanay Feature Comedy, "Taming a Tyrant."

THE NICKELODEON

AMERICA'S LEADING JOURNAL OF MOTOGRAPHY

Vol. V | Chicago, February 25, 1911. | No. 8

A BEAUTIFUL SONG SLIDE.

THAT title ought to startle all moving picturedom. Was a *beautiful* song slide ever heard of before? Oh, never, never! But one actually appeared recently, and the novelty proved so startling that it wrings words of editorial comment from us. It was an illustrated song that proved grateful both to eye and ear, and the performance of it created a feeling of distinct pleasure. The pictures were beautiful with lovely architectural and landscape backgrounds, and the coloring had been done by someone who knew how. It was noted that the trees had received something more than a single daub, that the flowers had been treated individually, that the tints were appropriate and harmonious, and that care had been taken to keep within the outlines. The settings were in every case such as an artist might have chosen, and the figures posed so as to carry out the scheme of composition. The He and She concerned were dressed in handsome costumes of the fifteenth century, thus fostering the romantic and poetic illusion. The girl was really pretty, and the man had a bearing that was *not* suggestive of the poolroom and the ribbon counter. And above all, the pictures did seem to bear some relation to the spirit of the song, and might really be called illustrations.

After this blessed vision had passed one sat back and rubbed one's eyes as if recovering from the bright light of revelation. The pictures were a revelation. One suddenly realized that the song slide was not necessarily a pest nor even a necessary evil; that it could be a thing of pleasure and beauty; that the abominations turned out in the past had been unnecessary; that the boredom inflicted by these abominations had been needless; and that a further continuance of the same would be inexcusable. If one beautiful slide can be made, why not more?

The truth of the matter is, the slide-maker has not kept pace with the film-maker. While the latter has progressed the former has stood still. This is almost literally true. The slides of today are scarcely different in subject and treatment from what they were five years ago. They were cheap then and the majority are cheap now. But consider the enormous progress that the film-maker has made during the same period. From an industry that was none too lofty in aim or spirit, the motion picture has developed into an art of high ideals and creditable achievements. The film-makers are giving the public an artistic product that is entirely commendable. Some of them are establishing high reputations; and none of them would think of turning out pictures so inane in sentiment and abortive in execution as the majority of those which come from the hands of the slide-maker. The film-maker has too high a conception of his duty to the public. Yet the slide-maker serves the same public and appears on the same programs. Some day the public will rise in wrath and behead these obstinate slide-makers.

No, the public will not rise in wrath and behead anybody; but the slide-makers will find themselves headless just the same. The public will begin to murmur and "kick" and the sound will grow louder and louder, until pretty soon an opinion will go the rounds that the song slide is no longer popular. The exhibitor will no longer rent, the exchange will no longer buy, and when that happens the slide-maker will feel as if he no longer had, or wanted, a head.

And this will be a deplorable happening all the way around, for the demise of the song slide would be a great loss to motion picture houses. Something is needed to give rest and variety to motion picture programs, and song slides supply the need perfectly. That is, *good* ones do. If the slide-makers will turn out good slides they need never fear extinction. But if they continue along the old shameless path, turning out ten bad slides to one good one. they need not be surprised to find Destruction lying in wait at the next turning.

If the slide-makers think, as doubtless they do, that they are turning out a perfectly good and worthy product now, and cannot see any way in which they might improve, we advise them to go and see the song-slide which inspired this article. The song is entitled "The Vale of Dreams"; it is published by J. H. Remick and the slides are by Dewitt C. Wheeler. After viewing this very excellent piece of work let them swear an oath to "go it one better," and then repeat their own success forever after. There are vast potentialities of art and beauty lying in the song-slide which the slide-maker could realize and develop. And he must do this if he would live. The song-slide must improve.

A COMEDY OF ERRORS.

WE do not ordinarily regard it as our province to criticise or even comment upon the statements of our contemporaries. But when we read some of the extraordinary hypotheses and theories advanced in the course of a debate now on between a motion picture trade paper and the organ of a group of film manufacturers, we cannot refrain from injecting a word of comment. The discussion reveals a state of nescience in regard to technical matters which might be called alarming were it not absurd. The only redeeming feature of the discussion is that very few positive statements are made on either side.

Among some of the claims which have been advanced so far by one or the other of the participants in the dispute are the following:

That the condenser lens of the projecting machine draws the rays of light from the arc and so creates a

gentle current of air which tends to blow the flame of the arc forward toward the lens.

That the tendency of the arc to turn toward the lens, as a flower toward the sun, is caused by the attraction of a static charge from the glass surface of the condenser.

That a statically charged piece of glass repels rather than attracts.

That glass, being a non-conductor, would not receive or retain a static charge.

We have purposely refrained from crediting these various scientific views to their respective authors by name. We spare them that. But we cannot condone the circulation in published form of so much misinformation, especially when almost any high school boy could settle the dispute in a moment with a correct explanation of the various electrical, optical and meteorological phenomena under discussion, and that without referring to a text-book. And his decision would be that no glass lens yet invented or designed has ever drawn toward it a single ray of light. Nor has it exerted the slightest influence on any rays of light but those which, in the natural course of their projection, pass through its body. Nor has it ever created a breeze to blow errant arc flames in the right direction. He would say further that glass, because it is a non-conductor, very readily receives and retains a static charge of electricity. So charged, it would exercise a certain attraction on other bodies in its vicinity, provided they were not charged the same way. If they were charged the same way, it would exert a slight repellant effect on them. But such a piece of glass could not retain its charge long in the immediate proximity of the heated gases around an electric arc, and even if it did the arc would not be affected thereby.

The manufacturers' organ before mentioned has generously posted the sum of fifty dollars to go, as we understand it, to the theorist who proves his assertions correct. We cannot escape the conclusion, however, that this is a case where all bets are off.

MORE "NON-FLAM" LEGISLATION.

IN the general assembly of the state of Ohio a bill has been introduced to amend section 4652 of the general code related to the use of buildings for public assemblage. The bill reads as follows:

> Whoever, being the owner or having control as an officer, agent, or otherwise, of any opera house, hall, theater, church, school house, college, academy, seminary, infirmary, sanitarium, children's home, hospital, medical institute, asylum or other building used for the assemblage or betterment of people, in a municipal corporation, county or township in this state, permits it to be used when any door affording exit therefrom is locked or barred, or opens inwardly, when the place is not provided with ample means for the safe, and speedy egress of the persons who may be there assembled, when sufficient water and proper means to extinguish any fire which may occur therein, or when, the proper certificate provided for in this chapter has not been issued, or is not in full force, or whoever conducts or permits to be conducted therein any moving picture show or exhibition using films composed of any inflammable, combustible or explosive substance or material for the projection of such moving pictures, shall be fined not less than fifty dollars, and not more than five hundred dollars, and ten dollars additional for each day or night such building is permitted to be used after such conviction is had and until changes, alterations or additions have been made sufficient to warrant the issuing of a certificate by the chief inspector of workshops and factories.

Of course, the only really objectionable provision of this bill is that relating to the use of inflammable films. In other words, the bill is an attempt to legislate non-inflammable film into universal use.

Now non-inflammable film is a very valuable product indeed; it has doubtlessly done much for the advancement of the art. But its use at present is controlled by a certain faction of interests, whose contracts with its manufacturers prevent its use outside of their circle. The passage of such a bill would mean that the independents must either secure non-inflammable films or quit doing business in the section affected.

We can only say, as we said before on a similar occasion, if the independents can secure good non-inflammable films then the proposed law is a just one and should pass. If the independents cannot secure non-inflammable film, then the law is unjust and should be killed. The Eastman Kodak Company manufactures this kind of film under patents. Its entire output is used by the licensed film producers. Should the proposed Ohio bill become a law, the Kodak company should be made to supply non-inflammable films to the independents.

TALKING PICTURES AGAIN.

THERE is nothing new about talking pictures, with the possible exception that any system which shows possibilities of success would be new to most of us. We have seen and heard so many failures in that line, that we are almost inclined to tire of the subject.

But the fact is, talking pictures have got to come. They are a branch of the future development of the art that is inevitable. And there is no reason in the world why they should not be successful in every sense. Pictures in their natural colors are in process of development and will be commercial in a very short time. The coming of the larger picture, big enough to embrace a whole legitimate stageful, is bound to come in time. And with the present perfection of the talking machine the silent drama need be silent little longer. We now have talking machines so excellent as to deceive a person not in the same room with them. Their operation in synchronism with motion pictures is purely a matter of mechanical detail, which cannot long withstand the onslaughts of a number of earnest inventors.

The term "silent drama" has been employed in speaking of motion pictures because of the peculiar requirements and restrictions of the art. We must adapt our scenarios to purely visual comprehension because we have no other means at our disposal. Talking pictures, by adding dialogue to the present form, will change the whole system of scenario preparation. It will admit themes now considered impossible and so broaden the scope of the art beyond limit.

So we may regard talking pictures as a real necessity in the development of motography, and as necessity is the mother of invention the talking picture, as we said before, is inevitable.

A GOLD LEAF SCREEN.

Fred Dever, proprietor of the Pastime picture theater, at Iowa City, Iowa, has invented a gold screen which promises to revolutionize things in the moving picture business. Mr. Dever plans to organize a company to manufacture and market the screens.

Our notion of the height of *de luxe*-ity is a motion picture on a gold leaf screen.

Building Codes and Picture Theaters

By William T. Braun

In preparing a series of architectural articles on the designs and construction of motion picture theaters, it is only logical to discuss, first, the ordinances and building codes of the various cities regulating the construction and operation of theaters. In reviewing these codes it was found that only a few of the larger cities in the country have paid enough attention to the picture theater to draft anything which might be called an ordinance regulating their construction. Most of the building departments decide for themselves how each individual theater should be constructed. Among these is the building department of the largest city in the country. Whether this is for the good of the exhibitor or not is hard to tell, as some of the departments when checking over plans may be over-zealous because of the magnified danger which exists in their minds, and some again may pay such little attention to the subject as to court dangerous practice. The slight knowledge displayed by most people associated with building and supervising the construction of the picture theater may be attributed to the newness of the enterprise. We are having all sorts of freak laws passed and repealed in about the same rapid strides that have characterized the business since its beginning. But it is hoped that all will settle down and a sane building code, properly enforced, will be the result in every large city.

In reviewing the situation we have selected the codes of Chicago, San Francisco, St. Louis and the few regulations which New York can offer. This will give us a view from all sections of the country. In Chicago a new code has just been enacted, and is a good example of what might be done in this line by other cities. San Francisco offers a fair treatment of the subject in its ordinance of December, 1909. The code of St. Louis, not as strict or large as either of the above, was passed in April, 1908. All that could be obtained from New York authorities was a sheet containing thirteen rules, which they use as the basis for checking. These rules, although short, cover the subject fairly well; and they state that as conditions are different in every case, each building must be considered separately and individually.

The codes of the above cities, except St. Louis, classify the theaters of all kinds into two classes, according to their seating capacity. In Chicago and New York, all theaters seating over 300 persons must conform throughout in construction to the same laws which govern regular theaters. In San Francisco it is over 400, while St. Louis appears to class all picture shows by themselves. As we are interested purely in the picture show, and the majority of them have a seating capacity of less than three or four hundred, we will only discuss the ordinances regarding them, leaving the regulations of the larger ones until we discuss the plans of some of them.

We now come to the question of frontages. In Chicago the theater shall have a frontage on at least two thoroughfares, one of which must be a street, the other may be an alley or court, public or private, not less than 10 feet wide, provided it leads into a public street or alley. Only one frontage is required by San Francisco, although an extra exit with conecting passage or court must lead to the street from the rear of the building. This amounts to practically the same thing. St. Louis requires but one frontage. While the rules of New York do not mention the subject of frontages, they specify that there shall be two exits located apart from each other, which really amounts to two frontages or one street frontage and a court or alley.

Regarding construction, the Chicago code allows buildings of less than 30 feet high to be built of ordinary construction, provided the enclosing walls are of masonry. No frame buildings are allowed in Chicago or San Francisco. No moving picture theater may be installed beneath living or sleeping quarters in Chicago. In San Francisco buildings are divided into classes "A," "B" and "C." "A" and "B" include all fireproof buildings, while class "C" is what commonly known as mill construction. That is, the outside walls must be of brick and the interior walls and partitions may be of wood. All buildings not fireproof, that is, in class "C," must have the interior lined throughout with sheet metal, or be metal lathed and plastered, with the exception of masonry walls, which need not be lathed and plastered. The St. Louis code merely requires that if any part of the building is used for dwelling or lodging purposes all communicating passages, such as stairs, elevator shafts, or other openings through the floors, shall be enclosed in fireproof walls.

The highest part of the auditorium floor in Chicago theaters cannot be higher than four feet above the sidewalk. The floor level at the entrance, not over eight inches above the sidewalk. The aisles shall not have a greater incline than 1½ inches to the foot. San Francisco and St. Louis do not mention any floor levels, but as they require all exits must lead directly or abut on streets or courts, evidently no theater would be allowed above the first floor level. New York specifies that no moving picture theater should be above the first floor.

In Chicago, where external stairways are used leading from galleries to the street, these stairs must be six inches wider than the exits which lead to them; and the treads not less than ten inches wide, with risers not over eight inches high. These stairs must have handrails on both sides; if over seven feet wide they should have a double handrail in the middle.

Not more than one balcony and no galleries will be allowed in non-fireproof Chicago theaters. St. Louis prohibits the use of any balconies or galleries in any theater whch is not of first class construction; this is equivalent to fireproof.

Aisles in Chicago theaters shall have in the aggregate a width of not less than 20 inches for each 100 seating capacity, adding proportional parts of 20 inches for fractional parts of 100 capacity; but no aisle may be less than 2 feet 6 inches wide. Where side emergency exits are used, a cross aisle not less than three feet wide shall lead directly to the exit. No steps will be allowed in any part of the auditorium floor or aisles. All aisles, passageways, entrances and exits shall be kept clear of turnstiles, railings, or other obstructions. In San Francisco all aisles having seats on both sides

shall not be less than 3 feet 6 inches in width if they are less than 60 feet long; 4 feet wide, when they are over 60 feet long. Aisles with seats on one side only may not be less than 2 feet 6 inches wide if they are less than 60 feet long; and not less than 3 feet wide when they are over 60 feet in length. Where cross-aisles lead to side exits, such aisles should run direct to center aisle and, when exits are at rear, aisles leading to them should be of maximum width throughout. St. Louis and New York both require aisles no less than three feet wide throughout. In St. Louis aisles should increase from 3 feet, an amount of 2 inches for each ten running feet of the aisle toward the exit. St. Louis also specifies that all aisles shall lead direct to exits and vice versa.

The width of corridors, passageways and doors shall be computed in the same way as the aisles for Chicago theaters; but no corridor or passageway shall be less than four feet wide, or door less than three feet wide. In San Francisco all passages which connect exits to streets or alleys should not be less than five feet wide, and must be lined with sheet metal throughout, or be metal lathed and plastered. The San Francisco ordinance requires a space of ten feet from the front tier of seats to the screen. This may seem a waste of space, but no seat should ever be placed nearer to the screen than ten feet, as it is difficult to see the picture when at closer range, and is also bad for the eyes.

In the question of seats Chicago prescribes not more than ten seats in a row between aisles, nor more than six seats between an aisle and side wall. Seats should not be placed less than 32 inches back to back, and should be not less than 20 inches in width across the top of the back. San Francisco requires that no seat shall have more than six seats intervening between it and an aisle, which is equivalent to thirteen seats in between aisles and seven seats between an aisle and side wall. They also allow seats to be placed 29 inches from row to row. St. Louis allows no more than nine seats between aisles; while New Ycrk allows no more than seven seats on each side of aisle. Whether this can be construed to mean fourteen seats between two aisles I do not know, but am inclined to think that it would. They also specify seats to be no less than 30 inches back to back. All agree that seats shall be firmly secured to the floor and that no chairs or stools are allowed in the aisles.

We now come to the important question of exits. The Chicago code requires that every moving picture theater shall have at least two entrance doors, each of which shall be no less than four feet wide. If the rear of the building abuts upon an alley, there shall be no less than two emergency exits leading directly to the alley. Where such exits pass over or under the stage floor level, they should be fireproof lined and floors and ceilings of slow-burning mill or fireproof construction. If the side of the auditorium abuts upon a street or alley such emergency exits shall be located as follows: One exit at a distance of not greater than five feet from the proscenium wall or stage, and the other at a distance half-way between the foyer and stage wall. When balconies are used exits by means of stairways or stairway, fire escapes equal in width to 18 inches for each 100 persons shall be provided, with proportionate parts of 18 inches for fractional parts of 100; but no such exit shall be less than 2 feet 6 inches in width.

San Francisco requires that the two street exits be five feet wide. For emergency purposes they require one exit in rear for less than 150 capacity; one in rear and one in rear half of auditorium, where capacity is between 150 and 300 persons; for between 300 and 400 capacity there shall be one rear exit and two additional exits, one of which must be in the rear half of the auditorium; except where the auditorium is less than 30 feet wide one exit must then be located in the center of the side wall. Rear exits if in the side walls must be within ten feet of rear wall. No exit shall be less than five feet wide.

Every theater in St. Louis shall have at least three exits, two upon the street and one on another street or alley. Exhibition rooms abutting directly on three streets or two streets and an alley shall not exceed 5,000 square feet in area, unless located in a building of first class construction, and shall have two exits upon each of the three above mentioned sides. An open court leading directly to a street or alley, and not less than six feet wide, shall be deemed an alley. No exit shall be less than five feet wide and they must open directly from exhibition room to street or alley.

New York requires two means of exits located apart from each other.

All doors affording ingress or egress in Chicago theaters shall open outward and no door shall be less than three feet wide. Above mentioned doors, all passageways, and means of exit must be kept free of draperies, and no door shall be locked or fastened when an audience is in the theater. Such doors must be so constructed and maintained that they may be opened easily from within.

In San Francisco exits which lead from the auditorium to the five-foot passageways mentioned before, need not be equipped with doors, but may be hung with draperies and curtains. All doors and exits must open outward and be unfastened during the time an audience is in the theater. The requirements of St. Louis and New York both agree in that all exit doors should swing outward and be kept clear and free from draperies at all times; the doors shall also be kept unfastened when an uadience is in the room.

Some Chicago motion picture theaters have vaudeville on their bills, and the Chicago code furnishes requirements as follows: When the area of the stage exceeds 72 square feet a proscenium wall of solid masonry, no less than nine inches thick, must be provided, extending from the ground to the roof. When the stage contains less than 72 square feet the proscenium wall may be constructed of two-inch solid plaster walls, composed of metal studs, metal lath and plaster; or of three-inch hollow tile. In no case may the ceiling or roof over the stage be higher than three feet above the highest point of the proscenium arch. No trap doors or other openings will be permitted in the stage floor. San Francisco does not provide for a stage in its section regarding moving picture theaters, and, presumably, if a stage is wanted in any of their theaters it must be built to suit the requirements prescribed for regular theaters. St. Louis absolutely forbids the placing of any stage, platform or scenery in any motion picture exhibition room. Where picture machines are installed in any theater or opera house, these theaters need not comply with the requirements for moving picture theaters, but must comply with the code regulating large theaters. New York requires the stage enclosure to be fireproof or wood covered entirely with metal.

If a stage is erected in a Chicago theater the proscenium arch must be equipped with a curtain composed of long fibre asbestos twisted on brass wire into a close cloth. A long discussion follows about the manner in which it shall be lapped, reinforced and lifted, which will not be dwelt upon now, but taken up later when we discuss the plans of theaters equipped with stages. Other openings in the proscenium wall or in other walls of stage must be equipped with non-combustible self-closing doors.

A structure may be built over a Chicago theater, provided it is not used for sleeping or living quarters, if it conforms to the following: The entire ceiling of the theater must be fireproofed and the upper structure supported on steel girders or trusses protected by fireproofing.

We now come to the location and construction of the operator's booth. In Chicago, under the new code, all booths must be built of four-inch hollow tile or four-inch solid concrete, supported on iron beams or columns. The door to the booth must be metal clad, and swing outward. A metal flue or pipe, 18 inches in diameter, shall extend from the ceiling to three feet above the roof of the machine booth and terminate in the open air. San Francisco requires the "picture box" to be absolutely fireproof, and any inflammable bench, fixture or appliance must be metal clad. Peep-holes must not be larger than 12 inches square, and must have gravity doors of No. 14 B. & S. gauge sheet iron arranged to drop freely in metal grooves. The doors to be kept open by fusible links placed in series with a single strand or cord hung directly over the film, so that in case of ignition of film the link will fuse and doors close. There shall be no other opening from operator's booth to closet storeroom, or blind space, and but one exit door. A vent pipe six inches in diameter must extend from the ceiling to roof or outside wall. A window opening directly to the outer air may be used in lieu of the pipe. The greater part of the code of St. Louis is taken up with a description of the operator's booth. If the theater has a frontage on but one street the operating room must be located at the opposite wall or away from the exit; if it has a frontage on two streets, the booth must be located at the end of the room opposite and farthest away from the frontage. This ruling compels the location of the booth just opposite to where it is placed in most cities, and the entire floor plan must be rearranged. The booth must be constructed as follows: The frame shall be made of angle iron no less than 1 by 1⅛ inches, securely braced, sheathed and roofed with sheet iron no less than No. 20 B. & S. gauge; or covered with ¼ inch hard asbestos board; or with matched lumber covered with asbestos or sheet metal. Booth to have shelves, benches, etc., of combustible material shall be covered with as bestos or sheet metal. Both to have a six-inch diameter vent pipe to the open air. The entrance door to be no larger than 2 feet by 5 feet and of same construction as booth, arranged to close automatically by spring or rope and weight. Peep-hole no larger than 12 inches square and arranged to close in same way as mentioned in the San Francisco code. New York makes short work of the subject by saying: "Machine to be enclosed with fireproof material."

Chicago does not prescribe any standpipes or hose only when a stage is used having a greater area than 72 square feet and combustible scenery. In this case the standpipe shall be no less than 1½ inches in diameter, and equipped with sufficient hose to reach any place on the stage, and connected to a 1,500-gallon gravity tank located 25 feet above stage level. San Francisco requires about the same as above for each moving picture show where more than 300 persons are seated, only the standpipe must be in the middle of the side wall of the auditorium. They also require at least two buckets of no less than three gallons each and two fire extinguishers; these to be placed outside of operator's booth, no matter what the seating capacity.

In a Chicago theater equipped with a stage whose area is greater than 72 square feet, one or more flue pipes must be built over the stage having an area equivalent to 1/20 of that of the stage and shall extend at least eight feet higher than the highest point of the roof. All such flues shall be equipped with dampers controlled by switches and automatic fusible cords.

All fuse boxes in Chicago theaters shall be surrounded by two thicknesses of fireproof metal, with an air space between, and all electrical equipment in the theater must be installed and maintained to the satisfaction and approval of the city electrician. The word "Exit" shall appear in letters six inches high over the openings to every means of egress from the auditorium, and shall be lighted with a gas or sperm oil light provided with a red globe. All means of outlet, such as corridors, stairways and emergency exits, shall have gas or electric lighting equipment to properly illuminate such passages. They shall also be provided with signs indicating the way out of the building with letters no less than six inches high. All the above mentioned lights shall be controlled by separate shut-off, located in an accessible place and controlled only in this place. No gas or electric fixtures can be installed in walls or ceiling unless protected by fireproof materials. Footlights, if of gas, shall be protected by wire network, and placed in an iron trough. Border lights must be constructed in the best manner subject to the approval of the city electrician.

In San Francisco every means of exit shall have the word "Exit" in letters not less than eight inches high over the same, and shall be equipped with a red light on an independent circuit from all other lights in the building.

The lighting of exits and other theater lights in St. Louis agrees in almost every way with that of Chicago, except that the house lights may be controlled from a switch in the operating room. All wiring must be done in accordance with the rules of the St. Louis Fire Prevention Bureau.

All codes agree that the exit lights shall be kept burning as long as there is an audience in the auditorium.

In regard to scenery: All scenery in Chicago motion picture theaters shall be made stationary, and shall consist of not more than two asbestos curtains, three stationary wings on each side, and four stationary border drops. All scenery shall be treated every six months with paint or chemical to make it non-inflammable. If scenery is made of metal, the smoke flue and stand pipe before mentioned may be dispensed with at the discretion of the building commissioner and fire marshal. All New York scenery must be of fireproof material.

Dressing rooms in Chicago and New York must be made of fireproof material and properly ventilated.

In Chicago the building commissioner shall determine the number of persons which every moving picture theater may seat. He shall certify the same to the city clerk and no more than the number so certified will be allowed in the room at any one time.

In St. Louis a theater with but one street frontage shall not exceed 1,000 square feet in area. If the theater is situated at the corner of two streets and an alley it shall not exceed 5,000 square feet in area, unless the building is of first class construction.

Frontage consents must be obtained for every new theater erected, as required by the ordinances of the city of Chicago, and must be filed with the commissioner of buildings.

All of these rules and regulations apply to new buildings being constructed and others to be remodeled. All theaters now in operation which conformed to the ordinances at the time of their construction need not be remodled to suit the ordinances unless reference is made to this in the code. As before stated, these laws apply to the building of motion picture and small vaudeville shows of three or four hundred and less capacity. The ordinances governing theaters of a greater capacity will be discussed when we take up the planning and construction of them.

Motion Picture Legislation in Kansas

Representative Block recently introduced into the Kansas legislature a bill that struck a blow at moving picture shows and which threatened to put them out of business. But C. H. Kerr, a moving picture man of Independence, took a hand in the matter and succeeded in getting the bill amended so that its vicious nature was ameliorated. The amended bill places the administration of the law in the hands of the city mayor, so that local conditions may be handled at home.

For the benefit of exhibitors in other states where legislation of a similar nature is threatened, the complete texts of the original and amended bills are reproduced:

The original bill:

"An Act to prohibit the public exhibition of any criminal or indecent pictures, and prescribing the punishment therefor.

"Be it enacted by the legislature of the state of Kansas:

"Section 1—It shall be unlawful for any person or persons or corporation, directly or indirectly, to publicly show, display or exhibit, or cause or permit to be publicly shown, displayed or exhibited, any moving or stationary pictures showing, indicating or suggesting lewdness or indecency, or the commission of any crime or misdemeanor, or the infidelity or unfaithfulness of husband or wife.

"Section 2—Any person or persons or corporation violating the provision of this Act shall be deemed guilty of a misdemeanor, and such person or persons, or the officers of such corporation, shall be punished by a fine of not less than one hundred dollars nor more than five hundred dollars, or by imprisonment in the county jail not less than thirty days nor more than six months, or by both such fine and imprisonment.

"Section 3—This Act shall take effect and be in force from and after its publication in the official state paper."

The amended bill, finally passed:

"An Act to prohibit the public exhibition of any criminal or indecent pictures, and prescribing the punishment therefor.

"Be it enacted by the legislature of the state of Kansas:

"Section 1—It shall be unlawful for any person or persons or corporation, directly or indirectly, to publicly show, display or exhibit, or cause or permit to be publicly shown, displayed or exhibited, any moving or stationary pictures showing, indicating or suggesting lewdness or indecency, or the commission of any crime or misdemeanor, or the infidelity or unfaithfulness of husband or wife, that shall be in the judgment of the mayor of any town or city or any person or persons chosen by the commissioners or the city council of any city to act as censors, as injurious to the morals of the city or any citizen thereof, or to offer evil suggestions to the minds of children or against the public welfare.

"Section 2—Any person or persons or corporation violating the provisions of this Act shall be deemed guilty of a misdemeanor, and such person or persons, or the officers of such corporation, shall be punished by a fine of not less than one hundred dollars nor more than five hundred dollars.

"Section 3—In case any owner or manager be operating a motion show with rented moving picture film, and not buying his films, and depending upon a rental agency or exchange for his daily supply of films for his various changes of program, and such rental agency or exchange shall send him moving picture films that if exhibited would be in violation of this Act and such manager or owner be compelled to close his show because of failure of such rental agency or exchange to supply suitable moving picture films for his regular changes of program; then such manager or owner shall have an action for damages against the rental agency or exchange for such failure, and is hereby granted the right to levy upon the films of such exchange or rental agency and sell them to satisfy the judgment of the court in the case as is prescribed by law in regard to actions for damages; and further providing that the possession and renting of the films leased or rented by such film rental agency or exchange shall be considered as sufficient proof of their ownership of the films, or of sufficient interest of the real owner of the films in the transaction to render such films liable to seizure for damages under this Act.

"That the amount of damages such owner or manager of the moving picture show is entitled to as provided for by this Act shall be an average amount of the business done of the same day of the two weeks next before the day on which such show is closed on account of the failure of the film agency or exchange to supply sufficient and proper program to such manager or owner.

"Section 4—This Act shall take effect and be in force from and after its publication in the statute book."

Paul J. Rainey, who expects to spend three years on shooting expeditions in East Africa, India, Borneo and the Malay Archipelago, departed February 1.

With Mr. Rainey is Dr. M. E. Johnston, who accompanied him on the expedition into the Arctic. They have arranged to send many specimens to the Smithsonian Institution at Washington and to the New York Zoological Society.

An item of the equipment for the expedition is a moving picture outfit, including 100,000 feet of films.

An Educational Innovation

By James B. Crippen

On March 29 George Kleine will release what is said to be the first full educational reel ever released in America. It is a split reel consisting of two educational subjects, the first entitled "Dr. Charcot's Trip Toward the South Pole," and the second, "The Cormorants, or Japanese Catching Fish With Birds." The reel bears the trade-mark of Urban-Eclipse and discloses all the intelligent workmanship and perfection of photography which is associated with the products of that house.

The scenes depicted in "Dr. Charcot's Trip Toward the South Pole," were obtained during two years' exploration in the Antarctic by Dr. Charcot, an eminent French explorer. The launching of his ship, the "Pourquoi—Pas?" specially built for the purpose, is shown in a very interesting and unusual picture, and next we see the ship departing from Havre amid scenes of great enthusiasm. Punta Arenas, in Chili, is the last port of call before the explorers plunge into the unknown. The first polar picture is of an ice-bound sea— a phrase often met with in geography

The Launching of the "Pourquoi-Pas."

books, but understood in quite a new light by means of this picture. It is a bleak and forbidding picture, with its heaving ice-floes and angry waters darting and swirling between every crack and fissure, but the picture has a weird and affecting beauty. One begins to realize what Arctic exploration means, and to admire the temerity of men who pit themselves against such crushing and formidable forces. Wonderful pictures of these frozen regions follow, showing vast expanses of snow and jutting ice-crags. The loneliness of these scenes is indescribable, and we wonder how men can keep alive in their breast the spark of enterprise and hope when surrounded by such adverse environment. But we see them tobogganing down the hills of snow, all permeated with the spirit of holiday merriment. The last few pictures show us a colony of penguins, those strange man-like birds who seem to enjoy a comfortable existence in this god-forsaken spot. The beauty of these Antarctic pictures will tempt no one to go there with colonizing intentions; that is certain.

Ice-Bound in the Antarctic.

The second subject on the reel shows a very curious method employed by the Japanese in catching fish. Cormorants are a bird indigenous to Japan which subsist upon fish. They swim upon the surface of the water and, catching sight of their prey, plunge their long necks beneath the waves, rarely failing to get a "bite." The Japanese have tamed these birds and turned their fish-catching abilities to their own uses. Each fisherman starts out in a boat with a covey of cormorants, which he holds in leash by a string tied around their necks. Arrived at the fishing grounds, the cormorants start to work with a mighty splashing and spluttering, diving rapidly below the surface, and their long necks are gradually seen to puff out with fish. It is then that the second purpose of the strings around their necks becomes apparent. The birds cannot swallow the fish they have caught. When the birds' necks appear to be well filled, the fishermen unconcernedly drag them to the boats, and there with a little pressure scientifically applied the birds are obliged to disgorge. The cormorants seem to take it quite as a matter of course, and in time learn not to swallow the fish even if their necks are not tied. They are caught when young and carefully trained by their

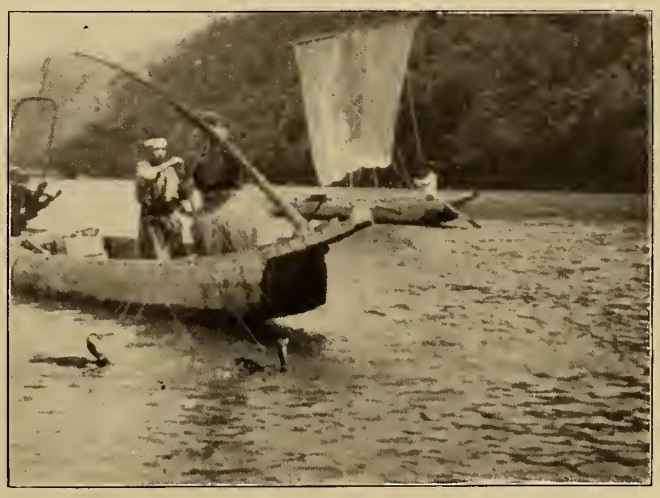

The Cormorant Fishermen.

master. One bird can catch on an average of one hundred and fifty fish per hour. Their period of service has a duration of fifteen or twenty years, so they are highly profitable servants, and thoroughly appreciated by their masters, who handle them with the greatest affection and care. A very strong *esprit de corps* subsists among the members of a flock, and they conduct their affairs under an aristocratic regime. Every bird in a flock has and knows its own number, and one of the funniest things about them is the quick-witted jealousy with which they invariably insist, by all that cormorant language and pantomimic protest can do, on proper observance of the recognized rights belonging to their individual numbers. No. 1 is the dean of the corps, the senior in years as well as in rank. He is the last to be put in the water and the first to be taken out, the first to be fed, and the last to enter the baskets in which, when work is over, the birds are carried from the boats to their domicile The rest have places after him, in succession of rank, and if the lawful order of precedence be at any time violated, a horrible rumpus arises in the family. This curious and interesting example of "how the other half lives" is shown in pictures that are beautiful and of the highest photographic merit.

It is to be hoped that this very worthy film will receive the popularity it deserves. There is a large silent demand on the part of the public for educational subjects, and this exclusively educational reel will give the public a chance to express their approval, for the novelty of it is bound to raise comment. It is almost a confession of shame to announce that this is the first exclusively educational reel ever released in America. Some day they will be as common as slap-stick comedies. George Kleine is to be congratulated for bringing the millenium one step nearer.

How to Make Sermons Interesting

"The visible drama shown in the right sort of motion picture has religious possibilities just as the spoken dramatic story or parable has them. Both help to make the gospel vivid. Indeed, one may venture the statement that the modern motion picture offers the most colossal opportunity for making a fresh moral and religious appeal to the non-churched portions of the community that has arisen in the history of recent Christianity. Why is it that people do not come to church? Many of them will say frankly, 'Your church is not interesting; your service of worship is adapted only to the taste of those who have been trained up to it; I cannot understand your music and cannot keep awake through your sermons; the interest of the clergymen seems to be far more with Jehoikim and Ancient Babylon than with the living men and the living issues of today. In a word the church is dull, therefore I stay away.'

"How far these criticisms are warranted need not occupy us here. Suffice to say we shall meet these criticisms in part if we try to present Christian truth in forms of present- day life, illustrating its issues from modern America more than from ancient Samaria. We also need to put Christian truth into pictorial and story form so that it will appeal to the imagination. The great popular preachers, Beecher, Moody, Spurgeon, and Gipsy Smith, all were masters in the use of word pictures. The moving picture machine enables the church to make the same form of appeal with visible and animated pictures. The pulpit orators and evangelists use 'moving pictures' in one sense of the term, pictures that move the heart by their thrilling quality; but the picture that literally is moving, that portrays dramatic sequence and life-like action, possesses tenfold more vividnes and becomes therefore a more convincing medium of education. The common people love stories and buy the cheap magazines to an amazing degree; these persons would love the motion-picture church service which gave them religious truths through acted stories.

"We men and women who have ever shown interest in pictures, hanging them on the walls of our homes, seeking them in illustrated books and now in picture-postcards, should turn naturally to the motion picture sermon which puts the gospel in a pictorial form. Some of you who attend church love the doctrinal phraseology of St. Paul. There is many a hard-headed American working man, however, who confesses freely that to him St. Paul is only a prosy old theologian. Paul, however, was not a prosy theologian to the men of his day. Why not? Because his illustrations for the gospel were taken from the life of his contemporaries—the racing habits of his day, for example, and the boxing matches. We ministers of today may not quite dare follow Paul in illustrating spiritual truth from the trotting park or a recent famous prize fight in a western city, but we have a right to use stories taken from life in the shop and factory and on the street as illustrations of the gospel to the men of today. Because the motion picture carefully selected will tell to the eye moral truth with vigor or illustration and an eloquence of impression which the most enthusiastic orator cannot command, it has a proper place in the equipment of any church which is trying to reach the masses."—Rev. Herbert A. Jump.

Indians Say They're Lied About

As an aid to fiction in its more lurid spots, the American Indian has long been known to fame and nobody has offered any objection, certainly not the noble red man himself. With the development of the latest thrill producer, the moving picture show, however, the situation has changed. Indian chiefs now visiting the lodge of the white father have voiced emphatic protest against the base uses to which their race is put in the unwritten literature of the 5 and 10 cent picture shows, and Indian Commissioner Robert G. Valentine has promised to take the matter up in all seriousness, if necessary, with the white father himself.

Big Buck and Big Bear of the delegation from the Cheyenne and Arapahoe tribes, which called upon President Taft, inspected a picture show during a tour of the white father's village. They saw a story of unmitigated villainy unrolled before their eyes and a native American, in full war paint and feathers, played the villain.

"I don't like it," said Big Bear, when the show was over. "It is bad to be lied about to so many people. We have to go home. If we did not I would go to President Taft and ask him to stop it. We will attend to it when we get home."

Commissioner Valentine was equally decided. "I have seen productions wherein the Indian was pictured as almost every evil thing one can imagine," he said; "but I have seen only a few wherein he has been favorably presented. I shall personally see what I can do to improve matters."

New Amusement Patents

By David S. Hulfish

It will be the purpose of this department to list all United States patents, as they are issued, which pertain to any form of amusement business, giving such data in each case as will enable the reader to judge whether he wishes to see the complete darwings and specifications of th patent. When patents of special interest to The Nickelodeon readers are encountered, the descriptive matter herein will be amplified accordingly. A complete copy of drawings, specifications and claims of any patent listed will be furnished from this office upon receipt of ten cents.

PATENT No. 970,962. Dissolving Stereopticon. Alphonso D. Smith, Kent's Store, Va., assignor of one-half to N. H. Myers, of same place. This invention has in view the object of producing dissolving effects with the use of a single lens and a single lamp, the mechanism being such as to be adapted to the limelight only. The description says:

The present invention aims at the production of a device, whereby dissolving views may be produced with a single lantern. It is well-known that in the use of a calcium or lime-light the gas flame is directed onto a comparatively small portion of a cylinder of lime in order to produce the required illumination. Practice has demonstrated when the cylinder is turned and the flame permitted to strike another point on its surface that an appreciable amount of time elapses before the new portion of the cylinder upon which the flame strikes co-operates with the flame to produce the original illumination. In fact during the turning movement of the cylinder the light is considerably dimmed and when the movement ceases the light gradually develops to full brilliancy. It can now be seen when a mechanism is employed to automatically turn the cylinder of lime each time the slide carrier is shifted that a dissolving effect will be produced. The present invention therefore aims at the production of such a device which may be applied to most forms of calcium-light stereopticons now in use.

Another object is the provision of a means for moving the cylinder of lime vertically in addition to the turning

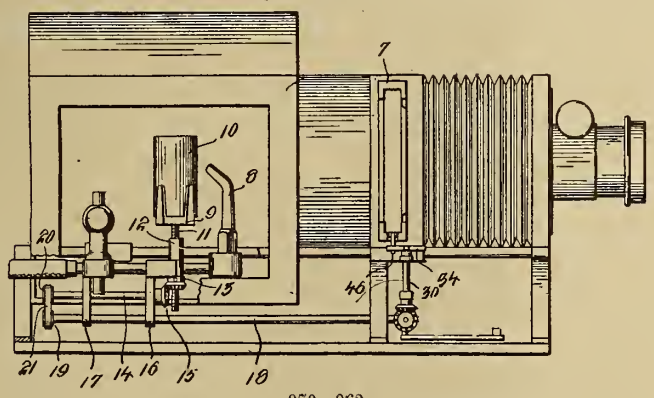

970, 962.

movement each time the slide carrier is shifted thus preventing what is known as pitting which results from the gas flame contacting too long with one point on the lime cylinder.

This paragraph outlines the invention, and the fourteen claims then define the scope of the protection which has been granted to Mr. Smith by his patent; the first claim, the broadest, being as follows:

1. In a stereopticon, the combination with a rotatable lime holder and a movable-slide carrier; of a connection between the slide carrier and lime holder operating to turn the lime holder during each movement of the slide carrier, for the purposes described.

The illustration accompanying in Fig. 1 of the patent, and shows a side elevation of a stereopticon or projection lantern for slides, equipped with a calcium or lime light and equipped also with the invention of the patent. In the slide holder *7* is a carrier which may be operated to change the slides quickly by the star-wheel tripper *34* upon the trigger *46*. The shaft *30* operates the star-wheel and is geared to shaft *18*, which is connected through belt *19* to another shaft *14*, which in turn is geared to the spindle supporting the lime *10*. A slight turn of this system of shafting and gears will release the slide to be changed quickly to the next slide and at the same time will turn the lime of the lamp slightly, producing the dimming of the light and consequently the required dissolving effect.

971,155. Motion Picture Machine. Albert E. Smith, New York, N. Y., assignor to The Vitagraph Company of America, of same place. A film guide device for the film gate.

To prevent the scratching of the film, and particularly, it is set forth, of the gelatine surface of the

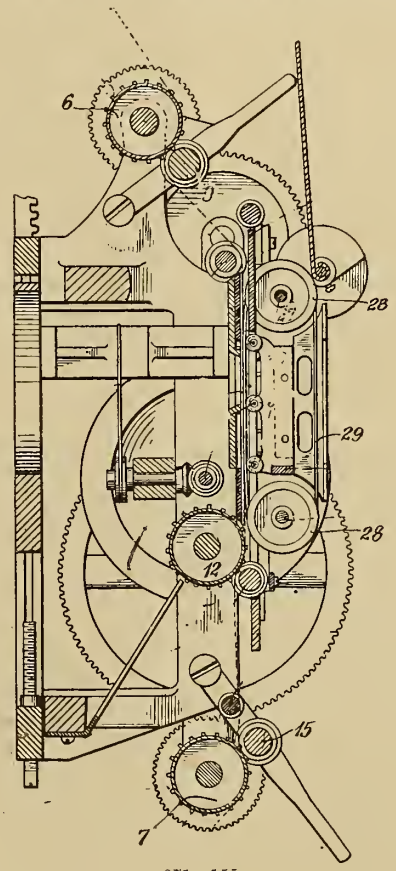

971, 155.

film, as the film passes through the film gate, there is provided a set of bands or belts which grip the edges of the film and move with it in its intermittent movement through the gate.

In the illustration, two pulleys numbered *28* and *28* may be seen, and a belt *29* passes from one to the other. This belt catches the film, shown as a dotted line running over the sprocket *6* at the top, to the intermitten sprocket *12* and then to the sprocket *7* at the bottom. There are two such tapes, one for each

edge of the film, and the pressure of the gate springs or film tension springs is applied to the film through these narrow tapes.

The tapes and rollers have no driving power other than the intermittent pull of the picture film itself, and merely form a sliding part of the film gate which moves with the film rather than permits the film to move over it. The alignment of the film for focus is maintained by the pressure against the face of the gate around the film window, as shown clearly in the illustration.

The claims cover the moving film guide as applied to a motion head. There are nine claims, of which the following is typical:

1. In a moving-picture machine, the combination of a member having an opening therein through which the beam of light is projected, means for moving a film intermittently, rollers for guiding the film over said opening when so moved, a shutter for obstructing the light when the film is moved, and a movable guiding device for the film independent of said film-moving means and movable with the film in the direction of the length thereof and in coaction with the edges of the film to guide the latter over said opening, substantially as set forth.

No. 971,317. Film Reel. Thomas Sharlow, New York, N. Y. A film reel for motion picture machines, comprising a film drum *D* and side disk *A*, the drum *D* consisting of a sheet of metal bent into cylindrical

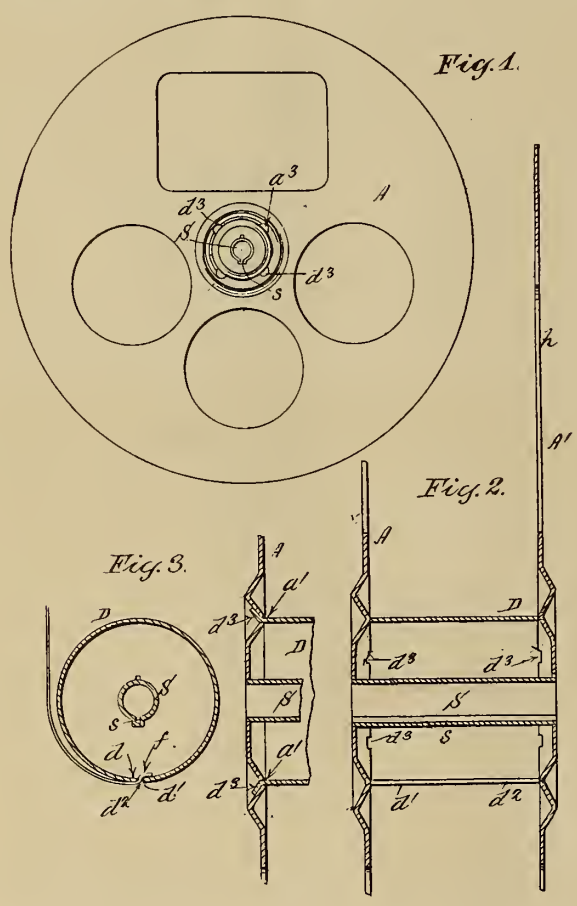

971, 317.

shape and formed with end tongues *d3* and *d3* engaging with slits formed for their reception in the side disks, the edges of said drum sheet being spaced apart as shown at *d* and *d'* in Fig. 3, to form a longitudinal slot at *d2* of Fig. 3 to receive the end of the strip of film *f* as a hub clamp for the reel, the side disks being formed with a protruding central hub having an annular groove in which the tongues *d3* of the hub are countersunk or clinched, and a spindle sleeve *S* extending axially between and secured to the protruding hub bearings of the side disks, and formed with a continuous longitudinal spline groove at *s*.

The four figures of the patent are shown in full, accompanying this review. The invention is protected by one specific claim.

Omaha Council to Inspect M. P. Theaters

A tour of inspection of the theaters and moving picture shows of Omaha is planned by the judiciary committee of the city council. This junket will be made in order to give the members of the committee a chance to see the class of shows that are produced in the city.

A resolution regulating moving picture shows was introduced into the city council recently at the instance of the Baraca union. At the meeting of the committee of the whole the proposed ordinance was referred to the judiciary committee with instructions to bring in a new ordinance which would cover all points objected by the Baraca union.

"In order that we may know what we are doing we will visit the theaters and picture shows," said Councilman Hummel, who is a member of the judiciary committee. "Objections have been raised in some quarters as to the kind of shows that are being produced in Omaha, so the committee will do some quiet investigating on its own account. It will probably be two weeks before we will be able to bring in the new ordinance. By that time we have hopes of having made a thorough investigation of the theaters and moving pictures."

Managers of the various theaters in the city say they will welcome any visits which the councilmen propose to make and that the doors of the theaters will be thrown open.

Bill to Change Present Law

A bill to change the present Pennsylvania law that requires moving picture theaters to have three parallel four-foot aisles was introduced in the House last week by Frank Gray, of Philadelphia.

The present regulations are objected to by exhibitors of motion pictures as practically prohibiting the use of narrow halls for their shows, twelve feet of the width being required for aisles no matter what is the width of the building. The amendment proposed by Mr. Gray proportions the width of the aisles to the number of seats in a row across the hall as follows:

Where the rows across the width of the building contains eight seats or less, on center aisle four feet wide; more than eight seats but less than twelve, a four-foot center aisle and a two-foot aisle at each side wall; twelve seats or more but less than twenty, a four-foot center aisle and a four-foot aisle at each side wall, or at least one four-foot aisle for every twenty seats or part thereof.

Captain John C. Delane, chief factory inspector, will oppose the passage of any bill, he says, similar to this one that will make it any more easy or profitable to conduct a moving picture business in narrow buildings, which, he says, are usually rudely reconstructed dwellings or stores equipped with seats and which he holds to be the most dangerous of the halls.

Municipal Publicity and Motion Pictures

By Watterson R. Rothacker*

PROMOTING the prestige and welfare of a city is now engaging the attention of progressive community patriots everywhere, and their best thought and judgment in regard to municipal advertising involves the use of moving pictures to gain effective city publicity.

Many cities have already been advertised by the film subjects which have been released by the various

Outdoor Screen and Crowd at Omaha Show.

European manufacturers and exhibited to the moving picture public in all parts of the world. It is undeniably true that many cities and territories have been advertised with decided effect by the moving pictures which embellish the travel talks, such as were made famous by Mr. Stoddard and are now kept in popular favor by those who, following Mr. Stoddard's lead and example, purvey this most commendable class of entertainment.

It is reasonable to assume that while the pictures above referred to give their subjects the benefit of their advertising power, which is too strong to be entirely subdued, they were primarily made to entertain, and while they unconsciously gave publicity to their subjects their full ability to advertise was not utilized.

The general inference—and we do not dispute it—is that the reputable lecturers, such as we have referred to, have not been, and are not, subsidized by the interests which receive a monetary benefit from the visits of those tourists who have been attracted to a place by the impressions gained at a travel-lecture where moving pictures served to illustrate.

The travel and scenic pictures which speak for themselves at moving picture shows unquestionably imply advertising; but they are far less powerful alone as a publicity agent than when used in conjunction with a lecture.

The point is this: Moving pictures have established their claim for recognition as an effective means to advertise and exploit a city or territory. Whether they advertise favorably or otherwise depends equally on the subject and its judicious interpretation and presentation under the direction of one who understands both municipal advertising and government of moving pictures.

RAILROADS FAVOR MOVING PICTURES.

The railroads of the United States and Canada have long realized that the best way to attract settlers and capital to new territories is to illustrate the opportunities which there exist, and that to influence a tourist and create a desire to travel there is no method available which will accomplish the purpose with the efficacy of moving pictures.

Lecturers in the employ of railroads of international importance are touring the country painting beautiful pictures, using the colors of their imagination and polished word descriptions with excellent supplementary effect, but depending upon the moving picture illustration of their subjects as the dominating influence. These animated reproductions, with their photographic accuracy, guard against the creation of false impressions—they are essential and helpful to the advertising success of the venture and through their enlightening agency the audience readily discern the subject and its appeal to them.

TO MAKE MOVING PICTURES ADVERTISE.

Moving pictures possess the power to advertise—the extent of the development of that power depends on a careful production made to conform with the purpose of the advertiser in a consistent combination of entertainment and advertising properties.

A sensible arrangement is to avoid over-elaboration. Men eminent in advertising are agreed that if

Typical Crowd Attending Omaha's Publicity Picture Show.

the first impression of an advertisement gives pleasure, the mind is influenced at once toward a favorable consideration of the appeal set forth. The producer of moving pictures of advertising intent should regard this opinion and at the same time guard against be-

*General Manager Industrial Moving Picture Co., Chicago.

fogging the real advertising issue with too much incidental decoration.

Application of real advertising sense in large doses is necessary to successfully develop the advertising power in moving pictures. The secret of this success is specializing, for one who understands advertising and does not know moving pictures, or who knows moving pictures and is ignorant of advertising, is not qualified to make moving pictures advertise.

ARRANGING MOVING PICTURE "COPY."

When an ad writer is assigned to a certain piece of "copy" he first makes it his business to learn all he can about the advantages of that which it is to advertise, then analyzies in his own mind the proposition of the advertiser as it concerns the public he desires to attract. When this preliminary consideration has prepared him, he prepares the "copy," dressing it so it will be attractive, phrasing it so that it has a convincing interest and perfecting it in general aspect so that it is a pulling publicity force. Putting this finished "copy" before the class of people most likely to respond to the advertising appeal is another duty of the specialist, and his advice and guidance saves the advertiser from having to "buy experience," which not only is costly but delays the delivery of the advertising message.

The specialist in moving picture advertising fits his production to the style of the subject. He takes infinite pains to concentrate his advertising arguments so that when presented on the film they are clearly discernible and are logical. The specialist protects the advertiser against the waste of an unnecessary film footage, for economical reasons and because he knows that the most receptive public prefer a pointed story in which the object stands out boldly from a pleasing background.

MOVING PICTURES AND MUNICIPAL ADVERTISING.

The possibilities of moving pictures in municipal advertising are rich beyond imagination, because they can illustrate the possibilities of a municipality and impress them in the minds of prospective residents and investors in a reliable and effective manner which is independent of the imagination.

Cities and territories all over the United States are advertising their commercial advantages and natural resources as Opportunities. Moving pictures make these opportunities knock—they describe them by giving pictorial proof of their being, which is far more productive of results than a mere assertion of their existence.

Moving picture advertising is honest advertising because it represents a subject as it actually is. The capable men who are engineering these campaigns which have as their mission municipal development are giving their attention to moving pictures because it is evident to them that the public likewise believe in and give their attention to this greatest descriptive means. They are not mistaken in this opinion, but they do make a mistake if they do not back it up with action and prove the theory by practice which, if properly made, will prove to the material advantage of their particular project, *if that project will live up to the claims they make for it.*

Moving pictures will make good the claims advanced by those who have studied their advertising possibilities. All of those who realize the value of illustration in advertising admit and acknowledge the superiority of moving pictures in this regard, for the power to illustrate is in moving pictures manifestly at its highest degree of efficiency.

COMMERCIAL ORGANIZATIONS BELIEVE IN ADVERTISING.

The attitude, expression and actions of the various commercial organizations of the United States indicate that they are strong believers in advertising and that their careful judgment advocates the use of moving pictures that advertise. Many cities are now being advertised by means of moving pictures, and a country-wide attention has been attracted to this most effective method of municipal and industrial exploitation.

Moving pictures presenting a vista of industrial and agricultural activities—the beauties and business of a community—the social advantages, home comforts of a place offering commercial opportunities—will arouse more than a passing interest; they suggest a further investigation by that class of people who are sought by the cities and territories as citizens, and whose action is urged more by the prosperous scenes which beckon to them in moving pictures than by all the words which could be said or printed.

A New Amusement Company

With a capital stock of $100,000, the Montgomery Amusement Company, with headquarters in Jacksonville, Fla., is now in process of formation, with Frank T. Montgomery, H. C. Dorsey and John T. Alsop, Jr., all of Jacksonvile, the incorporators. Letters patent will be applied for at once, with Mr. Montgomery as president, Mr. Dorsey vice-president, and Mr. Alsop secretary and treasurer.

The gentlemen who are interested in the company believe that there is a brilliant future for the motion picture business in the South, and their intention is to establish a series of handsome picture theaters in principal Southern cities.

Mr. Montgomery owns the Grand theater at Jacksonville, and is also interested in the Savoy, as is Mr. Alsop, both places being considered among the handsomest amusement places of similar character in the South.

Eclair's American Plant

Ground has been broken for the new American plant for the Eclair Film company at Fort Lee, N. J. In this city the Eclair Film company intends producing American subjects in American style, getting away from any similarity to their European product. Fort Lee will prove to be a satisfactory location as it is but a half-hour's ride from their New York office. The factory is not far from that of the Champion Film company, and also very near the Pathé plant at Bound Brook, N. J. The Eclair plant will undoubtedly be finished about the beginning this spring.

Picture Men Organize

A movement to form a National League of Motion Picture Show Owners was inaugurated at Marion, Ohio, February 6, at a directors' meeting of the Ohio Exhibitors' League. The association is composed of many leading moving picture showmen of the state. President M. A. Neff entertained the picture men at a banquet. Among those in attendance were President Neff, Vice-President W. A. Pittis, Conneaut; Treasurer C. O. Dupuis, Lima; Secretary C. C. Carter, Cincinnati, and Max Stearns, Columbus.

Some Questions Answered

By William T. Braun

In this department, answers will be given to questions upon any subject in connection with the conduct of moving picture exhibitions, the operation or construction of moving picture machines, the making of pictures or films, or any questions pertaining to the amusement business which can be answered without specific reference to any person or company. Questions are invited, and will be answered as promptly and as fully as possible.

PLACING AND ERECTING PROJECTION MACHINE.

Our operating room extends the entire width of the theater. Where is the best position to set the machine? Also give me a few hints on erecting the machine. The operating room and lobby are each seven feet high, making the theater fourteen feet at the entrance. At the screen the ceiling is nineteen feet high. We have 9x12 screen which is five feet from the floor.—S. J. S.

YOU are fortunate in having such a large operating room, and I judge from the dimensions of the theater that the building was built for a theater and is not a remodeled store.

In the first place, measure the distance from each end of the screen to the side walls. If your screen is in the middle of the rear wall, the projection machine should be placed in the middle of the operating room. If the machine is placed to one side the top and bottom lines of the picture would not be parallel. For instance, if it is placed to the left of the center the picture will not be as high on the left side as on the right, because the rays of light on the left side will strike the screw before those of the right side and the further the throw the larger will be the picture.

I have figured from the dimensions which you furnished that the bottom line of the screen is on a level with the theater floor at the entrance, making the center of the screen 4½ feet above the floor at the entrance. This leaves 2½ feet from the center of the screen to the floor of the operating room. You did not state what make machine you are using or how high you want it from the floor. But when sitting on an ordinary size chair while operating the machine the crank shaft should be about 3½ feet from the floor. Adding the 3½ feet to 2½ we get 6 feet from the center of the curtain to the center of the crank. The center line of the projection lens may be an inch or two higher or lower than the crank, but that will not make a great difference. If the throw is 60 feet and the center of the lens 6 feet above the center of the screen, the light will strike the screw at an angle of 1/10 or not quite 6 degrees with the horizontal. If the centers of the screen and lens were in a straight horizontal line, that is directly opposite each other, we would get an ideal picture; the opposite sides of the picture would be parallel. But at such a small angle as that above mentioned, the convergence will be hardly perceptible and the picture will appear square.

To get the machine in the correct position so that the light hits the screen correctly, that is, fills it, you must proceed in a systematic way. Measure the length of the operating room and at the exact center—providing the screen is in the center as before mentioned—place your machine. The machine and lamp-house are most likely placed on a board. Now, with a spirit level, test the floor under the machine to see if it is level. Then place your machine in position so that the crank shaft is 3½ feet from the floor. Then either place the level on the machine board to see that it is level, or measure the distance from the front and rear of the board to see that they are the same. Raise the rear of the machine board so that it makes an agle of one in ten, or for every ten inches in length of the machine board it should be raised one inch. For example, suppose your machine is 48 inches long; then raise the rear end of the board one-tenth of 48 inches, or 4¾ inches higher than the front end, or 3 feet 10¾ inches from the floor. If you have measured correctly, the light from the lens should just fill the 9 by 12 screen, provided you have the right size lens. The equivalent focus of your projection lens for the above throw and picture should be 4½ inches.

In regard to securing your machine to the floor there are several ways in which this may be done. Most machines at the present time are equipped with four tubular legs with flanges to screw in the floor. After the legs are fastened securely the machine should be further secured or braced by fastening wires from the top of one leg to the bottom of one diagonally opposite. A good idea is to double the wire and in the middle place a large nail or small piece of steel and twist this around, making the wires taunt. This will absolutely prevent it from shaking.

Sometimes a fifth leg is added to the rear, counter-bracing the front legs. This also is very satisfactory. Some operators remove the legs altogether and build up a platform, using 2 by 4 lumber, bracing it securely. The only objection to this is that it seldom leaves room to arrange a foot pedal, to operate the dowser, which is a favorite with most operators.

After you have the machine in the correct position it is not a bad idea to cover the peep-hole so that only a small, round hole is left, just large enough for the light to go through.

It is also advisable to ground the machine by soldering a piece of insulated wire to the lamp-house and running it to a water or iron waste pipe.

The strings which control the covers on the peep-holes should be connected to one string or fusible link hung directly in front of the magazine. In case the film should catch fire this link will burn and release the strings, closing the fire doors over the peep-holes.

DOUBLE IMAGE.

Can you tell what is the cause of the trouble I am having with my picture? The picture appears double, that is everything appears double on the screen. I have tried adjusting the revolving shutter in various positions according to the directions which you gave weeks ago. I have tried focusing the lens, but no improvement can be made. I have used the same lens for over a year and have had no trouble of this sort before.—L. T. R.

REMOVE the film from the machine and get your spot on the screen, focus your lens so that the line of the aperture is sharply outlined on the screen. If the outline is double your lenses must have become twisted in the lens tube. More than likely when you cleaned them recently you put the wrong end to the outside. The lens with the curved surface or the bi-convex lens of the set should be placed toward the screen. Turn the lens around and I am sure your picture will be O. K.

It will do no harm to see that the film tracks are level and the tension springs set right. The shutter has nothing to do with your trouble whatever.

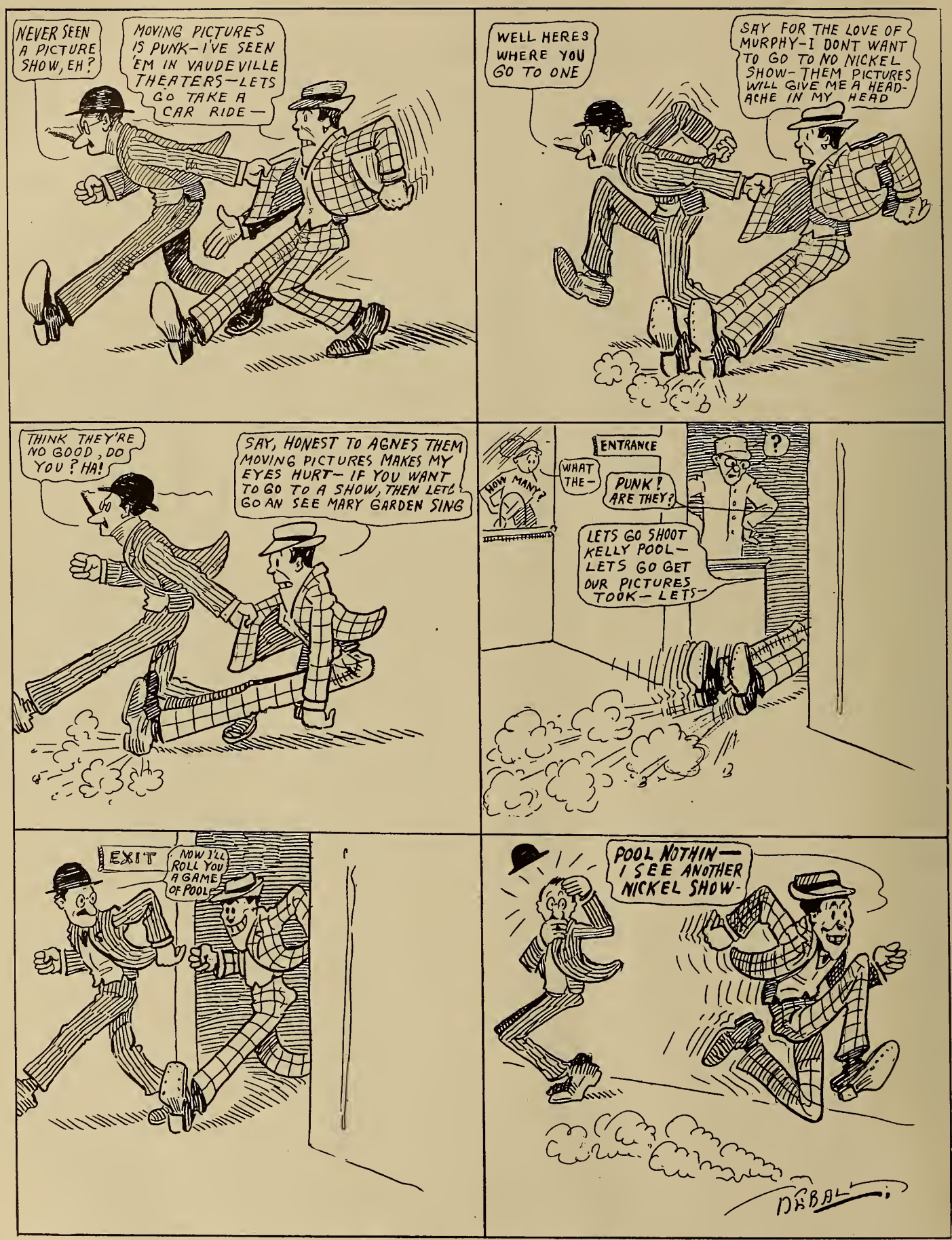

THE EVOLUTION OF A MOVING PICTURE FAN.

Recent Films Reviewed

A Woman's Voice.—Essanay. A nice little comedy of the right sort without chase or slap-stick. It is just such an incident as might happen in real life, and gains effectiveness by virtue of its probability. If a single point was forced or situation strained we fail to remember it. The settings were well put together; the artist's studio showed all the miscellany of odd furniture, *objets d'art,* palettes, brushes, canvases, etc., that are usually associated with such places. It was even noted that the producer had gone to the extreme length of printing an enlarged photograph of the leading lady on a canvas "stretcher" in order to give verisimilitude to the supposed portrait. This scrupulosity with regard to material details has been a noteworthy feature of recent Essanay releases. Too bad the producer did not exercise equal care in posing the young lady farther away from the artist during the "sitting." No artist would think of painting a portrait at such close quarters.

Ten Words for Twenty-five Cents.—Essanay. A good comic with much wit in the foundation. It is an amusing incident illustrating the peculiar workings of the feminine mind when it tries to cope with rules and institutions. Probably a great deal of this was brought out in pantomine in the telegraph office scene, but attention was distracted by the "business" between the little girl and the messenger boy. This was an attractive little episode, but came in a bad place, because we forgot the mother except to observe out of the corner of our eye that she was carrying on some kind of a spirited colloquy with the telegraph operator. Thus the drama was momentarily sacrificed for the sake of a little by-play, which is bad dramatic economy. The husband part was taken by a short plump man with puffy cheeks and a merry eye—the kind of man whom nature seems to cut out for comedian roles.

At The White Man's Door.—Vitagraph. If Vitagraph cannot do Indian subjects better than anybody else why attempt them at all. The market is already surfeited, and there seems no excuse for further activity unless done in exceptional style. "The Old Water Jar" was done in exceptional style and thoroughly justified itself; but this film strikes the general average, having a few good points, and a few bad ones, and many conventional ones. It sounds the old artificial note that has made the Indian subject a tiresome pest. The same old stilted attitudes and would-be Indian attributes. The "princess" was not Indian at all, except in make-up; she was a good enough actress but a bad Indian. The one real Indian showed them all up. The best scene was the first one, in the trader's cabin. This had points of novelty and was very well presented. The final scenes developed considerable dramatic interest mounting to a point of tensity where the Indian girl refused to save the life of the white woman whom she had poisoned. But the solution was brought about by a bit of conventional claptrap. She relented out of consideration for the white woman's baby—the "che-ild." It seems improbable that a young, vengeful savage girl who had never read a novel or seen a photoplay, would respond to any such appeal.

Betty's Apprenticeship.—Pathé. Funny for a little while, but the end is rough. There is not a spark of wit in drenching a young girl with paint—it's simply distasteful. This is no finical individual notion but one that a large audience seemed to share, no laughs being in evidence. Betty is funny when her tricks display wit, but not otherwise. This film was mostly otherwise. The only trick that qualified was where she put a red balloon in the Edam cheese jar.

The Rajah.—Edison. An interesting revival of an old-fashioned drama showing the type of hero who was popular in those days—the cool, haughty, imperturbable, well-groomed gentleman, and oh, so perfectly able and ready for all occasions and emergencies! So disdainful and blasé! And such a warm, noble heart under his icy exterior. Men fell before him and women fell for him. As much as the heroine wanted to hate him, she just couldn't do anything but love him—he was so strong and masterful. When we compare this fascinating gentleman with the "Man from Home," or the "Fortune Hunter," two plays which are as successful in our own day as "The Rajah" was in its, and for the very same reason, we see that there is a style in heroes just as there is a style in everything else. The play has been accorded a lavish production by Edison. The interior settings really look like the rooms in a wealthy home. One of the exteriors is also a notable piece of work, showing a mountainous glen with overhanging rocks, a rustic bridge and a waterfall, as realistic and efficiently executed as one would expect to see it on the legitimate stage. The part of the imperturbable "rajah" was taken by Mr. McDermott in perfect style. He is the "whole works," but the minor parts were also well assumed.

Carmenita, the Faithful.—Essanay. The first few scenes of this Western melodrama went off in fine style. The hero with his cool, masterful bearing and effective gun-play was the very sophistication of melodrama, deft and polished. And there was a beautiful heroine named Carmenita, and two Mexican villains, and an irascible father—all melodramatic gems of the first water. When melodrama is handled smoothly like this and with such a perfect dovetailing of situation into situation, the effect is not half bad. But the later scenes were not so convincing nor entirely intelligible. The business around the window was obscure, and it is hard to figure out whether later Carmenita intended to stab the villainous Mexican or herself. She was wielding her dagger in both directions, and we were holding our breadth to see where it would land, but at the critical instant she sprang that old gag of seeing a cross, so the dagger-play was all off, and we never learned whether her intention was murderous or suicidal. We suspected nothing very bad would happen anyhow as the usual squad of cowboy horsemen was galloping to the rescue. The end was apparently happy, though the husband still seemed to be in bad health. The piece is, all in all, quite good for a Western.

Consuming Love.—Vitagraph. The art-film of the year—so far. At least nothing originating on this side of the water can touch it. It is artistic in conception, and artistic in execution, and wholly charming. Novel, dainty, cute, poetical, fragrant, quaint, are a few more adjectives that come to mind. As a valentine subject it is superlatively *the* thing. The little drama itself is concerned with valentines, but it is the Kate Greenaway flavor that renders it so pretty and appropriate. Somebody at the Vitagraph factory saturated himself with the Kate Greenaway drawings, characters, poetry, and spirit, and then went to work with this film. The result is as successful as one could ever expect. One feels like clapping for an encore. Why not more Kate Greenaway subjects? There is plenty of material for them, and they might lead to something else along the same line. With this film the Vitagraph company has opened up a new realm of motion picture possibilities.

The Trail of the Pomos Charm.—Kalem. The Kalem company certainly knows how to work up an exciting chase and rescue effect. There is nothing novel about this one in any of its elements, but it stirs up a great deal of excitement. When the audience begin to lean forward in their seats and "urge 'em on," there can't be any doubt that they are interested to the point of self-forgetfulness. Kalem achieves this desirable consummation so often that it looks as if they knew just how. The rest of the film is one of those Indian subjects of which the world has grown so weary. A tendency for little groups here and there among an audience to greet these subjects with laughter and derision is noted of late. And these groups will grow in time until whole audiences will rock with merriment as soon as an Indian subject is put on. The American sense of humor is too keen to take them seriously much longer. If the Indian uniforms worn by the "supes"—yes, *uniforms,* for they were all alike and obviously made to order, in the style that toy departments keep for kids—if they would not raise a smile, what would? The best that can be said of this Indian drama is that it is about as good as most of them—"good" here becoming a synonym for bad. The pictures disclose some glorious mountain scenery.

The Ransom of Red Chief.—Edison. This comedy is based on an amusing bit of extravagance such as would have occurred to no man with a mind less ingenious and whimsical than O. Henry's. The humor is of a delightful and superior quality, providing appropriate subject-matter for an effective photoplay. It is conceivable that the young scamp might have been a little more impish and incorrigibly exasperating, but he was good enough, and the whole absurd situation bore that appearance of plausibility which O. Henry intended. The Edison company is once more justified in enlisting the aid of superior talent.

Society and the Man.—Vitagraph. Anyone who has ever noted that ornate and heavily bedraped device that heads every Vitagraph film, carrying the title and trade-mark, will know what we mean when we say that this drama is very much like it. The emotional tones are highly wrought, and they are piled on thick, and there is a suggestion of heaviness and conventionality about it. One would not deny that it is effective and rather well done in a way, but the art of it belongs to an old school. The pathetic pedal is held down for half the film and if one let oneself respond to it, one would be in a maudlin condition by the time the performance was over. On the other hand, it is too well done to be ignored or scoffed at, so one just sits and watches, feeling rather uncomfortable. The acting is all good and the settings equally so. The stock-market scene was really remarkable. A mob scene handled equally well on the legitimate stage would excite widespread admiration.

Fisher Folks.—Biograph. Once more Biograph demonstrates the power of an old story that is freshly handled and truthfully told. There is absolutely nothing new about the theme; it has done service a hundred million times or more; but the characters have been recreated, the motives freshly laid, the environment built up anew, and the action developed with all the legitimate means of dramatic technique. The result is as interesting and potent as the latest thing from scenario-land. The acting is all forceful and the settings picturesque. Some unusual experiments with the lighting of the pictures have been attempted and with great success. The final scene is beautiful simply because the picture has shadows in it, the light coming from one source, just as it does in real life, and in real pictures.

A Heroine of '76.—Rex. Too bad that a new company could not do something more original with its first release than repeat a drama offered not long ago by another maker. The difference between "A Heroine of '76" and Selig's "For Her Country's Sake" is infinitesimal. Aside from the ethics of the situation, which we do not profess to know or attempt to decide, it does lay the trespasser open to a critical charge—that of poverty of invention, which is the least excusable fault in a new concern. Let it be said for Rex, however, that it staged the drama far better than did its predecessor. In all material features the film is a very fine one. Settings, costumes and acting were all that could be desired. The photography with its steadiness, clarity, film tints and artistic lighting is as fine as any ever produced in America. In this respect the film looked foreign, to say which is paying it a high compliment. Rex is a company to be watched, for it seems to have all the facilities for doing first-class things. The next release is eagerly awaited. We hope the plot will be Rex's own.

A Stage Romance.—Edison. Here we have something quite novel in the way of a plot and it holds the interest tense. Why are these plays within plays always so fascinating? Probably it is the *double entendre* of the action, the same quality that often gives point to bon mots, epigrams, etc. We answer in French because we're not sure we're right. Or it may be the stage atmosphere that casts a glamor around anything. Certainly the stage environment alone adds greatly to the interest. It is always fun to get a peek behind the scenes, and probably most people would rather see a rehearsal than a straight performance. The rehearsal scene here is very well conducted and we could watch it for a good while longer. The acting throughout is natural and expressive. It is doubtful if any man with so slight a motive would resort to such a murderous action as did the disappointed admirer here concerned. But then—we must have drama. The leading lady delivered her role capably and with charm. The "behind-the-scenes" environment has been achieved with great skill and realism.

Little Sister.—Kalem. A pleasant little drama well played by the leading lady. Without her good work it would undoubtedly fail. The motives and emotions are lighter in tone than those generally employed by Kalem, and prove a welcome relief. Good stage management and regard for details is noticed in every scene.

The New Stenographer.—Vitagraph. It's rather cruel and certainly ungallant to make so much game of a woman's homely face. It tickles the men of an audience well enough, but there is many a girl lacking physical favor who must feel the hurt of such outspoken and pointed ridicule. That the farce raised shouts of laughter makes it hurt all the more. It must have been some consolation, however, to see how easily the three philandering males were pleased. It was considerate of the producer to employ a contrast that was not too emphatic. The situations are well worked up and played in clever style. The laughs are continuous.

Saul and David.—Gaumont. Too short for good dramatic effect. Just as the interest begins to rise, it's all off. And there is good material for dramatic pantomime in the Saul and David episode. To have shown how David's psaltery finally conquered Saul's fiery and morose frame of mind would have been highly effective. This is just the beginning—a fragment. What there is of it is beautiful enough to create the desire for more.

At the End of the Road.—Gaumont. These cunning child actors brought down the house. Child actors always take well and these, being especially good, took especially well. The bits of pantomime at the end were delicious. The drama is a melodramatic affair, forming an effective contrast to the cuteness and purity of the children. They were pure little things, though rough in garb and rude in manners.

Napoleon in 1814.—Gaumont. A typical Gaumont historical, which means that it is well done. Several scenes are of surprising vividness. Nearly all are beautiful. Great men are not always a success when dramatized, but the imperious and autocratic character of Napoleon is here well suggested, being brought out in the minor details, and not so much by the bearing of the man himself as by the deferential attitude of all who surround him. The scene where he advises with his generals, and drops off to sleep in the midst of it, is handled with impressive effect. The succeeding tableau with Napoleon asleep in the glow of the firelight is beautiful, and endowed with expressive significance —the imperious conqueror has succumbed to the gentle god of sleep just like any commoner.

Autumn Leaves.—Gaumont. By way of variety this is a very pleasing subject. Still life, however, is better adapted to slides than to moving pictures, nothing being gained by the movement, and much lost when an effort is made to add color. The color is well done as far as motion picture coloring goes, but that always leaves much to be desired. It is quite surprising to see a leaf change color under one's very eyes, and to see the outlines advance and recede and wobble generally.

Getting Sister Married.—Essanay. A lively farce full of laughter. The acting is spirited and the complications well developed. It's hard to see why the suitors found Jane so unattractive. She wasn't so bad, and proved herself to be an attractive actress at least.

Katherine Howard.—Eclipse. An historical production of the utmost beauty and splendor. Above all it is convincing. It realizes one's preconceptions of the period. The people are handsome with a large physique and courtly mien; their costumes are elegant and well fitting; they impress. The outdoor backgrounds are real castles, of superb architectural beauty; and the interior settings are equally appropriate, but simple and without a lot of meaningless gew-gaw trumpery. The details appear to be accurate; of course, it would take an archaeological expert to really say; but meanwhile historic conviction is achieved through esthetic channels. Convinced of beauty, we assume truth. It is no such bundle of rags and tags and commonplace humanity as American producers turn out when endeavoring to depict the same period. We wish some of them would go and look at this Eclipse, and then imitate it the next time they are tempted to produce an "historical." The plot of "Katherine Howard" is not so good as the vehicle that carries it. It seems stagy and none too convincing. One would hesitate to accept it as authentic history. Still, it is just impossible enough to be true, in accordance with the principle that truth is stranger than fiction.

A Boy's Wit.—Pathé. A tense drama that stirs many thrills. Child actors always take well. It is hard to fathom why this particular subject was chosen for color. There is nothing about the drama or its setting that seems to demand it. A laborer's humble cottage, with its unlovely interior, seems the last likely subject. But, of course, it gave the film a pleasing aspect, being exceptionally well done.

Whiffle's Double.—Pathé. A good farce, well acted and quite amusing. It serves as a good foil for the rather dark and turbulent drama that accompanies it on the same reel.

Of Interest to the Trade

By L. F. Cook

New York Letter

We were wrong last week in thinking that the lady with the lorgnette was the height of class. This exalted position is held by the person who is hard of hearing, and uses her gold-mounted, diamond-studded ear trumpet at the photoplay. Anybody else got any ideas on the subject?

A few days ago we saw Alabastra and enjoyed the experience very much. Briefly stated, the exhibition may be described as follows: The stage is arranged and set with small, not miniature, stage settings. When the curtain rises, one sees in the center, or approaching the center, the alabaster, or white figures. This is the moving picture part of the show.

In some quarters these figures have been called plastic, but this is wrong—for reasons look up your "Century"—but are alabaster in that they are white. These figures are projected without any apparent screen, and have a wonderful stereoscopic effect.

Just how this is effected the representatives refuse to state, on account of commercial and patent reasons, but they expect to be ready in a few weeks to give out technical articles for the trade.

As an exhibition, Alabastra is an unique affair, and should prove not only entertaining but very interesting and mysterious to the audiences.

The scenery of the various settings are delightfully colored, and a noticeable feature is that when any of the alabaster images pass in front of any part of the scenery, the image shuts off the view of that part of the scenery, just as is done on a real stage. This proves that so far as the eye goes the figures are opaque.

The representatives state that it is not necessary to photograph the figures in white, but, on the contrary, they can be photographed in regular black and white, as in the ordinary film.

The Alabastra film itself is the equivalent of the commercial film, can be run through the ordinary projector and at the usual speed. Of course, this projector has to be especially placed for this purpose, but all that is necessary to present this feature to the public is a special setting and arrangement.

It is claimed that the cost of installations is comparatively small, and may be easily transported from place to place.

A darkened hall is not necessary, as the pictures may be projected in the ordinary theater light, and this comes in line with the most modern advances. Taken all in all, Alabastra is very interesting, and bids fair to become a permanent fixture in the business.

We are very glad to be able to announce that the recent fire at the Bison factory did only a very small damage to the business of that firm. Most of their shipment for their release of February 22 had been sent out, so that the only shipments it was necessary to miss were a few of those near home, that would not ordinarily be sent out until Monday. It is understood that future releases will not be affected in any way. The cause of the fire is unknown at this time.

Geo. A. Magie has hit the road in search for standing orders for his second release. Two a week will be the output of Solax, beginning Wednesday, March 8. Magie starts out very sanguine of landing many of those much-sought orders, and his "rep" is such that those who have standing orders are night-herding them with machine guns.

A film that bids fair to be of unusual interest is Kalem's "The Diver." This is an industrial picture, showing the dangerous life of a deep sea diver—very unusual—and is bound to hold and please the attention of its audiences. The film will be released March 15.

From a selling point of view, the success of the Rex has been truly phenomenal. They came to bat on the first release with more orders than had been expected, and, believe us, they had set their hopes pretty high. To accomplish this required not only a high degree of selling ability, but a film of excellent qualities. If Rex can keep up this pace, and advance showing of future releases seems to indicate they will, they will be a welcome and honorable addition to the Sales company.

Vitagraph Notes

The Vitagraph players, clad in furs, moccasins, and blankets, have bidden farewell to the mountains of the frozen north, and are now working at the studios, finishing up the in-door scenes of the "Stolen Claim," "At the Ends of the Earth," "In the Arctic Night," "The Sky Pilot," and "Gold." All these pictures have the true coloring of the Arctic regions, snow cap peaks and the thrilling incidents of life among the snow drifts and the hardships of the pioneers of civilization and advancement.

"Caribou Bill," who is prominent with his Alaska dog teams, drove them into the studio yards, hitched to a sleigh loaded with snow shoes, skis and furs, which he had collected from the Indians, to be added to the costume department of the Vitagraph company.

Saturday, March 4, "Mammy's Ghost" will make nts appearance. It is a good, solid story of an old colored woman, who scares away the enemy and saves her master. If you believe, or don't believe, in ghosts, you have got to take off your hat to "Mammy's Ghost."

The large eagle, which was shot by Producer Fred Thompson, and which he had mounted, now adorns the private offices of the Vitagraph company, emblematic of its "trade mark." It is admired not only as an ornament, but as one of the finest specimens of the king of birds that has ever been secured. Mr. Thompson presented it to the Vitagraph company at its annual dinner on February 11.

Selig Pays $1,000 for Fire Films

The Board of Fire Commissioners of Los Angeles, Cal., received a $1,000 check from the Selig-Polyscope Company, February 9, in accordance with a contract to make moving pictures of the Los Angeles fire department and the new drill tower when constructed. The pictures are to be taken from time to time, thus advertising the Los Angeles fire department throughout the world. The commission hopes to send a representative to San Francisco to get ideas on drills.

Cleveland Ministers See Films

On Monday evening, February 13, the Lake Shore Film and Supply company of Cleveland, Ohio, in co-operation with the local Anti-Tuberculosis League, under whose auspices the exhibition was given, exhibited the five reels of the "Life of Moses," a Vitagraph issue, at the Euclid Avenue Christian Church. The projection was accomplished by a well-prepared Biblical lecture, delivered by the Rev. Dr. H. M. Cook.

The performance was well attended, there being approximately four hundred and fifty persons present, a goodly number of whom were clergymen and ministers. All told, two hundred and seventy ministers were invited. To say that the entire audience was enthusiastic does by no means express their appreciation in the superlative degree. A prominent layman, after witnessing the exhibition, made the remark that in his estimation this subject, shown to both children and adults, would do more in a spiritual way than a whloe year of sermons.

Although no one derived any special benefit, either monetary or otherwise, from this exhibition, it nevertheless had its object, and the results will ultimately be seen that the men of the cloth are going to take a different stand toward motion pictures, at least in the city of Cleveland. It will remove, to a great degree, the narrow-minded and prejudiced opinion held by a good many clergymen toward motion pictures and motion picture theaters.

A Deplorable Accident

Thomas S. Nash, general superintendent of the Selig plant at Chicago, was the victim of a most unfortunate occurrence on February 18. He was giving his wife and baby a ride in his new automobile and started to cross the Chicago, Milwaukee and St. Paul tracks at Grace street. But when the car reached the center of the tracks it stopped suddenly and refused to respond to pulls on the levers; at the same time a locomotive was approaching at high sped. Standing up in the front of the machine, Mr. Nash called to his wife to pass the baby to him and then jump for her life. He took the baby from her hands and jumped to safety. A moment later he saw the locomotive strike the automobile and hurl his wife fifty feet through the air. She had tried to jump, but was too late. The automobile was demolished and Mrs. Nash was picked up bleeding and mamed, but she was conscious, and at once asked for the child. Baby William Nash, fourteen months old, was brought to her. When she saw that he was alive she fainted. She was carried at once to a hospital, where her injuries were discovered to be very serious. Her life was for a time dispaired of, but at the present writing her recovery seems hopeful. The accident will cost her the permanent loss of a hand and one limb.

Kinemacolor Shown

The first public demonstration of color photography in moving pictures ever seen in Chicago was given recently at the Union League Club on the occasion of the ladies' night entertainment. One of the most interesting pictures shown was the famous "Bud to Blossom." The picture represents an actual moving picture photograph of many varieties of flowers bursting into bloom. The blossoming of the flowers was hastened by every artificial means possible and photographs taken every seven seconds for two days.

Good and Bad Side of the Motion Picture Theater

"In our city not long ago, when a stormy day prevented the afternon session of the public schools, a lad came up to the teacher's desk and, triumphantly showing a nickel, said jubilantly, 'Now I'll have a chance to go to the moving pictures before I carry my papers.' The problem of the poor man's leisure, someone has said, is the crux of the social problem. If only the motion picture—which has recently been authoritatively rechristened under the more convenient title of the 'photoplay'—could be carried on by the school and church and municipality so as to fill the poor man's and the poor boy's leisure with helpful instruction and clean entertainments, instead of being carried on by private individuals not always of the most refined type for gain, it would be a splendid thing. The two points of danger in the 'M. P. theater' today are the character of the exhibitors who conduct the business and the character of the vaudeville acts which are generally interspersed between the different films to rest the eyes—and apparently also to pander to a depraved taste on the part of the theater-going public which, for reasons to be explained later, does not find in the motion picture itself the salacious and indecent elements which are craved. In the course of considerable exploration into the motion picture world during the last year I have visited scores of theaters in a dozen cities of the East; and while my testimony will surprise the uninformed, I am ready to declare that in all the hundreds of films which I have seen, there has not been a single one that was indecent and there have been only a few that impressed me as morally dangerous to the community. This could not have been the report a year ago, and it would have been altogether impossible five years ago.

"The fact is: that the motion pictures being shown in the United States today, thanks to the Board of Censorship established by the People's Institute in New York, show on the average a far higher moral tone than the plays and comic operas and vaudeville which are supported by the so-called respectable classes. Many motion picture films, to be sure, leave much to be desired in the way of refinement, good taste, delicacy of feeling—but public taste exhibits the same lacks. Meanwhile the percentage of innocuous pictures is much higher than the percentage of innocuous dramas, while behind the photoplay industry there is an intelligent body of men and women constituting the Censorship Committee, not in the least connected with motion pictures commercially, who are moving as fast as the public will permit toward a complete disinfecting of this form of entertainment from every taint of harm. And the leading manufacturers are co-operating most willingly and most intelligently."—Rev. Herbert A. Jump.

Montreal Exhibitors in Protest

As intimated in The Nickelodeon some time ago, some of the moving picture owners of Montreal have refused to pay the tax of $500 imposed by the authorities. The legality of the by-law has been challenged by the theater men and they signify their intention of carrying their case to the privy council, if necessary. The city leagel department says it cannot stop the action of the film show men. The privy council is the highest court of appeal. It is above the Canadian supreme court and should the matter go through to the council, there will be a final judgment.

Synopses of Current Films

From the Manufacturers' Bulletins

Vitagraph

A TALE OF TWO CITIES—PART 1.

In France, in the year 1757, there was a great conflict between wealth and poverty—in other words, between the aristocracy and the people. The Marquis St. Evremond was a leader of the privileged few, with no respects or consideration for the rights of the "common people." The Marquis seizes a young peasant girl and kills her brother who tries to defend her. He endeavors to force his attentions upon the girl, who dies from the abuse and treatment she receives from his vassals. Dr. Manette, a celebrated French physician, is called in, and when he beholds the cause of the girl's death he refuses to conceal the crime. He is hurried to the Bastile and is imprisoned without trial. During his imprisonment his home is wrecked by order of the Marquis, and his infant daughter, Lucy, is taken to London by his faithful servant, Defarge, who places her under the guardianship of Mr. Lorry, and she becomes a ward of Tellson's Bank. Dr. Manette, during his imprisonment in the Bastille, writes a document denouncing the Marquis and all his family, calling upon the people to avenge his wrongs. He is set to work as a shoemaker in his cell; his imprisonment is a living death and he soon loses his reason and his own identity.—Released February 21.

A TALE OF TWO CITIES—PART 2.

Eighteen years after the events depicted in Part 1 Lucy Manette has grown to young womanhood and, unknown to her, she is very much admired by Sidney Carton, a dissolute young attorney for the Tellson's Bank. Through her purity of soul and the height of her character, he is made conscious of his own weakness and deficiencies and inspired with a desire to gain her respect and friendship. Through a letter from Ernest Defarge, the former servant of Dr. Manette, Lucy learns that her father is still alive. She loses no time in going to Paris with Mr. Lorry, to find her father. Lucy finds him in the garret of Defarge's wine shop, changed in mind and body. At first he does not remember his daughter, but gradually recollects. Charles Darnay, grown to manhood, is filled with disgust at the deeds of Evremond and the oppressions of the people, renounces his title and gives his estate for the benefit of the people. Lucy, returning to England with her father becomes acquainted with young Darnay, who is a passenger on the same boat. The Marquis, incensed at his nephew, sends hirelings to London, who accuse him of being a spy and an enemy to England. Darnay is arrested and acquitted; the Marquis' emissary cannot distinguish Darnay from Carton—the two so closely resemble each other. Darnay becomes engaged to Lucy, her father learns that his intended son-in-law is of the family of the Marquis, but does not reveal this knowledge. Mr. Lorry tells Carton of Lucy's engagement and the young attorney at once congratulates her and declares that he ever will remain her and her husband's friend, to prove which he would gladly lay down his life for their happiness.—Released February 24.

A TALE OF TWO CITIES—PART 3.

The Revolution in France is kindling. A child is killed by the Marquis Evremond's carriage. The father swears vengeance and the same night steals into the Marquis' chamber and kills him; this is the beginning of the end. The people rise in all their fury. With cries of "Down with the Bastille!" they overcome the jailer and recover the document written by Dr. Manette against Evremond and all his kin. In London, living in peace and happiness with his wife Lucy, Darnay receives a letter from an old servant who has been seized by the Revolutionists, and he calls upon Darnay to save him from the accusation of being in league with the Marquis. Darnay returns to Paris to help his servant and he is arrested as being an aristocrat. Dr. Manette and Lucy follow Darnay; the Doctor makes himself known as the prisoner of the Bastille and tells the infuriated populace that the young man is his son-in-law. They release Darnay and he returns to his wife, who is overjoyed. When, however, the people learn that Darnay is a nephew of the Marquis, they rearrest Darnay and condemn him to the guillotine. Sidney Carton now puts in an appearance. He bribes the jailer, gains access to his friend's cell, tries to persuade Darnay to change clothes with him and let him take his place. Darnay refuses, but Carton, who has provided himself with chloroform, applies it to the prisoner's nostrils and while he is unconscious, changes garments with him, calls the jailers, has them carry Darnay to the carriage, which he, Carton, has in waiting. Soon Darnay is restored to Lucy and her father; they safely make their way to London, while Carton is taken to the guillotine and suffers the death penalty, a willing sacrifice for the love and friendship he bore Lucy and her husband—Released February 25.

CAPTAIN BARNACLE'S COURTSHIP.

Old Captain Barnacle, a widower, left alone after the marriage of his daughter, contemplates a second marriage. He takes his old friend, Captain Bunce, into his confidence and Bunce tells him of a very attractive young lady who will make an excellent help-meet for him, recommending Miss Ivy Leach, a daughter of a widow who keeps a stationery and cigar store. "The best laid plans of mice and men aft gang aglee." Ivy is very much in love with Sam Morton, a young clerk, notwithstanding her mother's objections. When Bunce comes to see Mrs. Leach and makes known his mission, Mrs. Leach, on account of Captain Barnacle's bank account, which she consider would be a desirable catch and a very handy thing to have around the house, is delighted. All done up in his "glad rags," Captain Barnacle calls on Mrs. Leach with his friend Bunce for an introduction to Ivy and her Ma. As we might suppose, Ivy wants nothing to do with the old Captain, especially as she has already made her choice. Her mother insists that she shall marry the old Captain, and to get rid of her entreaties she *consents* to marry the old "salt"—but *not* to become his wife. The anxious Captain is ecstatic when Mrs. Leach tells him of her daughter's promise to marry him and makes preparations for his second matrimonial venture. Ivy makes preparations to foil her mother and disappoint the Captain; she gets her brother Billy to dress in her wedding gown and she puts on Billy's clothes. She meets Sam Morton, who is waiting for her with a horse and buggy, they drive directly to the parson's. While this is going on, Billy, impersonating his sister, in bridal costume and a long flowing veil over his face, is taken by the Captain to the parson's by a different route; the minister has tied the knot for Ivy and Sam and when the Captain and the bridal party come upon the scene, Billy lifts his veil, removes his wig and gives the Captain the "merry ha-ha," throwing him and Mrs. Leach into a fit of rage and dismay.—Released February 28.

BERTHA'S MISSION.

Bertha is a young lady with grand aspirations for high social and moral reform. She attends a lecture on the "ethics" of life and general social matters, in which the lecurer advocates and points out women's possibilities in the higher developments of the human race and also tells his audience their mission in bringing it about. Bertha is inspired with his ideas and resolves to discover some field in which she can help along the cause and elevate the world. Her affianced husband objects to her going about among the poor and lower classes and tells her that it is no work for a woman of refinement and it is a waste of time. Bertha insists that she has a mission and will not give it up. She starts out in search of an opportunity to do good, she comes across some urchins who molest a little girl and spill her pail of milk. Bertha talks to them and comforts the little girl. The girl's mother rushes from the house, whips her daughter for the mishap to the milk. Bertha lectures the woman and hands her a leaflet, the woman turns on Bertha and abuses her and tells her she is no lady. The woman's husband takes a hand in the matter and tells his wife that she is wrong, the wife and the husband get into a squabble and come to blows. Bertha's first attempt at reform is a rank failure. Her second is a worse one; entering a pawnshop she tries to interest the pawnbroker in her mission, while she is talking to him the police enter to arrest a man who is in the shop and who has just offered for pawn some stolen jewelry; to escape detection he slips the jewelery into Bertha's coat pocket, which is found there by the police and she is taken into custody in tears and locked in a cell. She sends for her intended and he comes to her assistance, she is released at once and promises she will give up her mission and devote her time and attention to doing something in which she can be more useful and successful.—Released March 3.

MAMMY'S GHOST.

A dramatic incident of the war between the North and the South in 1861-4, in which an old colored Mammy and a little boy rout the enemy and save the boy's father. Mr. Berkley, a southern gentleman, enlists in the Confederate army as an officer, he has no one with whom to leave the child, excepting Old Mammy, who has been in his service many years and loves his little boy as if he were her own. The Colonel's house is surrounded with the Union soldiers. Mammy thinks of a secret panel which leads to the garret, she turns it back and tells her master and his little boy to escape and make their way to the attic. She has no sooner done this than the northern force takes possession. They command Mammy to bring food and serve them, she provides them plentifully with strong punch of her own special brew which gets the soldiers well drunken. The little fellow up-stairs rattles the chain while his father is groaning and moaning. Mammy tells the invaders that the house is haunted, gradually their superstitions are aroused and gets on their nerves, and they rush pell-mell from the place. Mammy notifies Mr. Berkley and the boy of the departure of the men. Col. Berkley now makes his way to his regiment disguised as an old darkey. He continues in the service until the close of the war, returns to his little son and Mammy, she prepares a feast in his honor. As they sit at the table talking over Mammy's strategem the Colonel proposes a toast to "Mammy's Ghost."—Released March 4.

American

THE SHERIFF'S SWEETHEART.

Out in the desolate desert towns of New Mexico, there is many an honorable citizen whose life is haunted by a rash deed of youth or early manhood. Some deed that made him a fugitive from his native heath and drove him into the frontier wilderness of the far West. Even there, sometimes the law ferrets him out and drives him further from civilization with never a chance of reparation. So it was with Dad Boulter, the much beloved old justice of Crazy Gulch. For years he has lived there with his daughter, the pride of the gulch, and then one day there came to him a letter from the East, warning him that the next mail would carry a letter appraising the community of his folly. Disgrace and ruin were approaching the little western home, so acting upon an impulse of self-preservation, the old justice buckled on his pistol and rode to the outskirts of the town, held up the stage and confiscated the mail bag. The fatal letter was destroyed and the justice fled before the pursuit of the young sheriff and his posse. It happened that the sheriff was bethrothed to Nell, the daughter of the justice, and the strong struggle between love and duty, when he realized who his fugitive was, makes an intense dramatic situation. The justice was wounded in the chase and staggering into his hut, he bade his daughter bind his wound and hide him from the posse. The loyal girl hid her father under a bundle of clothing and admitted the sheriff. Her ruse was a failure and the presence of the old man was discovered. It was apparently all up when the clever girl proposed that the father be allowed to marry her to the sheriff before being taken away. With a little persuasion, the sheriff consented. For want of a wedding ring the girl proposed the use of the sheriff's handcuffs. When the unsuspecting sheriff was off his guard, the girl seized his gun, clamped the handcuffs on his wrist and hers and bade her father run. The old man got away safely, and the sheriff, realizing he had been outwitted, turned to the girl, and folding her in his arms, said "You win."—800 feet.

THE SILENCE SYSTEM.

The loyal, hard-working husband who devotes every moment of his spare time to thoughts of his home and those who are dear to him, has just finished his labors for the day, and, donning his street attire, he hastens from his place of business, buoyant and happy at the thought that he will soon be in the bosom of his family. On his homeward journey he pauses

for a brief interval in front of a jewelry store, and while looking at the trinkets displayed in the show window he enters, and after looking at several, finally selects a bandsome ring for his wife. With the ring carefully stowed away in bis pocket he resumes his journey homeward. Entering the house a few moments later than usual, he is met by the wife of his hosom and in exchange for his cheerful, affectionate greetings receives harsh words and cruel inuendoes. Thinking to placate her, he makes several efforts to present her with the ring, but is each time interrupted by a volume of words, black looks and imprecations. In despair he subsides completely and sits hopelessly staring into vacancy. The wife, finally exhausted, ceases for a period, when he takes the morocco case from his pocket, opens it and displays the handsome ring he has purchased for ber. Her attitude at once changes. At first discomfitted, then apologetic, now tearful. She is immediately transformed from a veritable shrew into a loving, cheerful wife.—200 feet. Released February 27.

COLLEGE CHUMS.

Ray Douglas and Walter Evans had heen chums from boyhood. It is not strange therefore, that when the time approached for their future training and educational advancement, they should select tbe same college. Botb lads had been reared amid luxurious surroundings, and had every advantage that wealth could purchase. Their college life was fraught with every measure of happy and congenial association. Sharing the same quarters, becoming memhers of the same fraternal organizations, enjoying the same social conditions, their lives were ideal in happiness and contentment until an unfortunate occurrence altered the entire condition of affairs and changed the future of both young men. Ray had formed a serious attachment for Eva Wells, a beautiful and accomplished girl, a resident of the town in which the college was situated. At first his passion was reciprocated, but Walter's arrival sowed the seed of discord, for Eva's preference for Ray's handsome chum soon became apparent and a serious breach occurred, which was gradually widened beyond hope of repair, by Esther Williams, a friend of Eva's, who sends an anonymous communication to Ray, apprising bim of the fact that Walter had proposed to Eva and was accepted. The college term ends and the two chums separate in bitter enmity. Walter, loyal to his promise to Eva, marries her. His trend and desires did not point to a commercial or professional life, so he drifted into Wall Street with a fortune left him hy his parents and soon became a plunger. Like many others, he soon finds himself a victim of frenzied finance, and drifts into absolute poverty through one final investment in a worthless mine. Ray, who had drifted westward, smarting under the lash of a disappointed love, after engaging in various ventures, finally purchased some mining interests, which developed into fabulous dimensions and made him a multi-millionaire. While seated in his library, deep in the enjoyment of a fragrant cigar, and gazing into the flickering flames of a coal fire, Ray picked up a newspaper from a convenient tahle and carelessly scanned its columns. An expression of surprise followed by sadness, diffused his countenance. Then for a moment he became thoughtful. The paragraph he had read divulged the fact that his old-time chum and friend of his boyhood days, had met with reverses and had been reduced to abject poverty. He studied the rays from the blazing fire and read in the flames:

"Too late we learn a man must hold his friend,
Unjudged, accepted, faultless to the end."

He immediately sought his broker and investigation discloses the fact tbat Walter holds large mining property with great possibilities, hut lack of funds had retarded its development. Ray comes to the rescue, but does not disclose his identity, until the deal is consummated. When he is finally recognized by Walter, the latter is declined to resent his interference, until called to his sense of duty by Eva, his wife.—975 feet. Released March 2.

THE LILY OF THE TENEMENTS.

Biograph

One half of the world don't know how the other half lives, or there would he more charity and concern dispensed by those of the fortunate half. There is indeed no disposition of indifference on the part of the hetter conditioned, but it is simply because they do not know. Here we find a youthful **toiler at a sewing** machine eking the lives of her poor old mother and father. She receives a mere pittance for her labor, and this barely gives them plain food without having much for the rent of their cheerless rooms. The owner of the tenements calls for payment, and being a man of unconscionahle principles offers her a means of ameliorating her condition and giving aid and ease to her and her own instead of the hopeless toil she is suhjected to. The temptation is great, but ber pure soul rebels against this contemptible assault and she sends him away promising to pay him the next day. What a rash promise, for she has no hopes aside from that which would be miraculous. Upon the owner's return to his office he is met by his son who is just hack from college. Tbis son is tbe father's one real love. He has built great hopes for heim and at once makes him a member of the firm. The next day the owner goes to reoffer his proposition, feeling that by this time she has weakened in her determination. He feels assured when the girl in her hopeless condition seems compelled to make a sacrifice of herself. She, however, promises to give her decision the next day. He has just left when she receives from the clothier a large order of sewing and so goes to beg for mercy and time in which to pay her rent. At the office she meets the son, who is deeply touched with the poor girl's condition and is further impressed by her innocent face. He at once decides to make an investigation, hut husiness defers his errand until his father enters and tells him he will go, of course, with a different object in veiw. The poor girl at his entrance is as a lamh on the altar and he has come to claim the victim. The girl, with repugnance, is about to yield, when the son with an urgent message for his father enters. He understands the situation at a glance and then and there denounces bis father, hidding him good-bye forever. Hastening out he secures medical aid for the old folks and material assistance for all, promising to protect the girl for all time if she will allow, as her pitiful lot has aroused in him sincere, honest love.—996 feet. Released February 27.

THE HEART OF A SAVAGE.

One thing seems strange in the Indian and that is his unflinching fulfillment of his moral obligations, especially those incurred by a feeling of gratitude. In this Biograph story the Indian lays down his very life for the one who bestowed upon him a small kindness. Into a camp of peaceful Indians fires a gang of miner thugs. They evidently regard the poor

Indian witb less consideration than a wild heast and to shoot him is simply one kind of sport. Several of the Indians are killed and wounded, but two escape into the brush and elude the varlets as they run hy. One of the wounded redmen is driven further away from the Indian village and though merely bullet-stunned falls exhausted by the side of a spring, apparently to perish, being helpless to reach the water, though in sight of it. On the brow of the hill there lives a prospector and his happy little family of a wife and small girl child. The prospector having departed from his claim, the wife goes to the spring for water and seeing the Indian prostrate before it, thinks his mien is hostile and is about to hrain him with a club when he feebly looks up. She sees at once he is suffering and in need of aid wbich she at once administers. Relating the incident to her husband later, he tells her to be careful, as the redman is cunning and should he avoided, but she is sure that he was truly grateful for what sbe had done. Meanwhile, the other wounded Indian has made his way to the village and told the story of the dastardly attack upon them by the thugs and a council is at once held and war is declared against all whites. The first Indian arrives just as the war-dance is participated in and realizing the danger in which his benefactors are rushes off to warn them. The poor fellow, however, is unable to make himself understood to the woman who is alone with her child. Finding it impossihle to make her understand him he resorts to the suhterfuge of snatching up the child and carrying it away knowing that the woman will follow. On and on they go until the summit of the mountain is reached, where he again tries to explain the situation, when a bullet from the husband's gun fells him to earth, he having arrived at his cabin and finding his wife and child gone, follows their foot tracks to find them in the company of the Indian whose designs he feels are sinister. Leaving the poor fellow on the ground tbey make their way back to the cabin which they find is now a huge pile of asbes, the Indians having set it afire on their march of devastation. It is now and not until now that they realize the poor Indian's good intent. Shocked beyond measure at the thought of misconstruing his motive with such disastrous result they hasten back to the scene where be fell only to find that the shot was fatal. Grief-stricken the two pay him posthumous honor by digging a grave and burying him. The production comprises a series of most beautiful scenes taken on Mount Lookout, a peak of the Santa Monica Mountains in California.—991 feet. Released March 2.

THE IRON MASTER.

Edison

The Edison Company has taken that well-known drama, "The Iron Master," wbich has stood the test of years, and painted it upon the canvas of the silent drama in a strong, vital form, telling the story clearly and distinctly, yet without marring in any way the beauty of the original. The story is laid in France and deals with high society. The principal character, tbe Iron Master, is a strong, true character of sterling worth who is deeply in love with Claire De Beaulieu, the daughter of a noble family living near to his estate, wbile she in turn is fondly devoted to Gaston, the Duke De Bligny, and also engaged to him. He, however, is a gentleman

of wild habits and eventually loses all his fortune at the gambling table. This fact soon hecomes known to Moulinet, a "financier," who has more money than manners and whose one desire is to marry his daughter into swell society. Being in a position to know of Claire's financial state, he acquaints the Duke of her entire loss of fortune, and then offers to pay off all his dehts if he will marry his daughter. This the Duke consents to do, and Claire, hecoming acquainted with the fact, is so deeply humiliated that she, upon the spur of the moment, accepts the hand of the Iron Master in marriage. On the wedding night he learns of the true state of her heart. He is crushed and broken hut still the Iron Master, and he decides that they shall live side by side but that she shall be his wife in name only. She at last realizes the strength and steadfastness of his love when he defends her honor and the insult which the Duke De Bligny, her former lover, has heaped upon her. A duel between the two ensues, and on the morning before she hegs for his love, hut not until after he has left for the dueling grounds does she learn what is to take place and that he married her knowing she was penniless. She reaches the dueling spot just in tim to save the Iron Master's life and almost forfeits her own instead. It is needless to say that the Iron Master wins her love, and the picture closes with the knowledge that a bright future is in store for them both.—1,000 feet. Released February 28.

Essanay

TAMING A TYRANT.

Bill Dohbs is a bully and his greatest pleasure seems to he in making life miserahle for his wife and daughter. Edna is an extremely winsome lass and it is Dohbs' hope to some day wed her off to Zeke Hazlitt, his nephew, who will have a thousand dollars when he is twenty-one. Edna dislikes the gawky Zeke and appeals to her mother. She is fearful of Dohhs, her second husband, and refuses to offer any help, but finally consents to write to Uncle Peter, her hrother, for advice. Uncle Peter is a wise old sea captain and when he receives his sister's letter, telling of the cruelty of Dobbs, he decides upon a plan which he feels will prove heneficial in the moral education of his hrother-in-law. Whereat, his young second mate, Jack Hastings, is dispatched with a note to Mrs. Dobbs, who is instructed to inform Dohbs that the sailor is her son hy her first hushand, whom she has not seen for fifteen years. The scheme works heautifully. Dobbs, instead of heing the master of his house, is cowed by the strapping hig first mate and made to do all the menial house work, much to the amusement of his wife and daughter. Zeke, unwelcome suitor to Edna, is given a lesson in the art of making love and then told to make himself scarce. After a few days of this when sailor Jack decides that his supposed step-father has had enough of the hitter medicine, he proposes to marry Edna and she accepts. The photoplay ends with the confession that Jack is not Mrs. Dohbs' son, and father, thoroughly suhdued, is condemned to a life of real usefulness in making the house-work lighter for his truly worthy spouse.—1,000 feet. Released Fehruarv 28.

ON THE DESERT'S EDGE.

Kate Shaw, a heautiful Western girl, has an admirer in Ed. Sawyer, an undesirahle citizen of the little town of Lariat. Because of her great fear for him she countenaces his advances hut when Sawyer gets into trouble in a gamhling hall she gladly directs young Hal Morley, a deputy sheriff, to the trail Sawyer has taken. Lariat reposes on the edge of the Mojave desert and it is in this great waste that Sawyer endeavors to hide himself. Morley tracks the bad man through the desert hut goes sand blind and runs across the bad man when he is at a serious disadvantage. Sawyer sees the young deputy's affliction and after a fight knocks Morley on the head with the butt of his pistol, leaving him for dead. Morley recovers and in an endeavor to make his way home stumhles over a cliff, rolls to the bottom and is severely injured. Kate goes out to search for Morley and finds him at the bottom of the cliff. She conducts him home, handages his eyes and goes out to prepare food for him when she hears Sawyer returning. He discovers Morley in the house and endeavors to choke Kate to death, but is shot down hy Hal, who has recovered slightly from the blindness. Realizing that they owe each other their lives, Kate and Morley become engaged and the photoplay closes with the pleasant intimation that they "lived happily ever after."—Released March 4.

Nestor

THE PROFESSOR'S ROMANCE.

Professor Wilkins remembered his college chum, John Hammond, since judge, with a deep and ahiding affection, and while he highly appreciated the honor the judge conferred in appointing him guardian of Eva Hammond, it was with dismay that the professor learned his friend intended having Eva with him until his return from abroad. Dismay became actual panic when a young miss of seventeen arrived with her maid, instead of the little girl of five Professor Wilkins had expected. Her appearance was the signal for an outburst of merriment on the part of his friends, Tom, Dick, Harry and the housekeeper, who had painstakingly transferred his sitting-room into a child's playhouse. Eva's sweetheart, George Bedlow, had pocketed the only "grown-up" picture she had, so when the judge ordered a photograph mailed to her guardian, Eva promptly forwarded the one taken several years before, hence the professor's mistake. A few weeks, however, found Professor Rudolph Wilkins not only reconciled to the addition in his household, but also altering his appearance at his ward's suggestions, and actually vieing with the boys for her favor. One evening, after the professor had presented Eva with a bouquet, greatly to the amusement of his friends, and triumphantly marched her off to dinner, George Bedlow appeared. Gleefully the boys showed him the bouquet and card—"With love—Rudolph." Then, after working him up into a jealous rage, stole softly out to await their friends' appearance. Indeed so effectively did they do their work that, upon Eva's return, George ahsolutely refused to listen to an explanation until she indignantly sent for the Professor. Delightedly that gentleman hurried down—only to find the young people so husily engrossed that they did not even notice his appearance. Hurriedly the learned man retreated to his room, snatched up the half-finished letter to Judge Hammond, asking his permission to marry Eva, and tore it into shreds. Then, with one glance in the mirror, he ripped off his high collar, angry, and ashamed that he should have been guilty of such folly.—Released March 1.

Pathé

A SOLDIER.

A private in the army receives a note from his sick mother begging him to come to see her. When he makes a request of the officer in command for leave, he is refused, but love for his mother being stronger than his sense of duty, he climhs the wall around the harrack yard and hastens to join her in the humble cottage where she lives. Unfortunately, however, he is seen hy an officer and followed, arrested and imprisoned. Discipline demands this. But the officer has a kind heart nevertheless, and seeking the best physician in the place sends him to attend to the poor woman. Upon her recovery she goes to the barracks to express her thanks and finds her boy in the guard house, and by her tearful entreaties so works upon the feelings of the general that in a most pathetic scene the son is pardoned for his breach of orders.—761 feet.

A BUFFALO HUNT.

Buffalo hunting in India is one of the greatest of native sports. The herds of wild buffaloes that are found near all the large rivers are anything but easy to capture and unless one is thoroughly experienced in hunting them, he is likely to go on a long journey without success of bagging any game. A wounded buffalo hull is a dangerous animal to fight, and it takes a good shot from a heavy rifle to put an end to his fighting.—236 feet. Released February 20.

HUBBY'S TROUBLES.

"Hubhy" is blessed with a beautiful wife, also with some mother-in-law! Said mother-in-law makes things hot for Friend Huhby. Everything the poor man does is misinterpreted by this inquisitive and imperious dame. When he attempts to smoke—nothing doing. When he attempts to have a drink—still nothing doing. When he puts his foot on one of the dining room chairs he is quickly hrought to the knowledge that this is thundering had form. In desperation he hikes for the open, where he meets with numerous adventures, among which is the meeting with a young lady who has just fallen and sprained her ankle. When the poor chap attempts to aid her, mother-in-law and wifey appear on the scene just in time to see him with his arm about her dainty waist. Huhby is led home with his ear in the clutch of Madam Mother-in-law, when a separation is decided upon between husband and wife with Mother-in-law as Advisory Committee. By a clever ruse hubhy manages to straighten things out. How he persuades his former tyrant that she is poisoned and that he is going to shoot himself, is all too funny to be told beforehand.—672 feet.

INDO-CHINA PROVINCE OF LAOS.

Showing scenes of interest taken of the people and country of that famous old country, with its towering temples and churches. The sunset across the hay is most glorious, and is often spoken of by writers who visit that part of the world.—321 feet. Released February 22.

WHO KILLED MAX?

Max has heen off on a terrihle toot and when he gets home, he proceeds to hreak up housekeeping in a most efficacious manner. Retiring to his own room he shoots the heads off a bust of Psyche and hreaks up things generally. Finally, going to sleep in the midst of this chaos he presents the appearance of having heen murdered. His parents rush in and find him thus and griefstricken send for the police. Professor Searchem, the prize pupil of Sherlock Holmes, gets on the joh, and hy a series of extremely clever deductions, catches the assassin and takes him to his office and summons the victim's parents to see this awful criminal. What the detective's sensations are when the parents discover that the man whom he has arrested is their own heloved son, whom they thought dead, and who in the meantime had come to life and started out on a new round of pleasure, is difficult to describe.—689 feet.

AN ESCAPE OF GAS.

A powerful odor of gas warns the Kapper's maid of an escape, and in a state of alarm hordering on frenzy, she hastily informs her master and mistress. The master of the house immediately consults the meter, which leaves no douht that there is a leakage somewhere. Forthwith a gasfitter is summoned. He proves to be a man of small proportions and brain powers, for in order to locate the leakage he lights a candle. At this last proceeding the Kappers fly in dismay, leaving the gasfitter to he hlown up, as he seems to wish it, in solitary state. At the end of a couple of hours the Kappers return. Their first feeling is one of satisfaction, for the leakage seems no longer to exist, and the gasfitter also appears to have gone his way in peace. But a glance around the room reveals a scene of wreckage and chaos, for the man in endeavoring to hring his candle in close proximity with every gas hracket in the house, has mounted chairs, tahles, cuphoards and sidehoards, and each and all have fallen heneath his unsteady feet. The house is also partially flooded, owing to his having unwittingly turned on the shower in the bath room. As the Kappers view the wreck of their home the door opens, and the gasfitter, candle in hand, appears smiling henignly. He is still looking for the escape, hut in another few minutes he is looking for it on the street, where a well-directed kick from Mr. Kapper's hoot has sent him.—302 feet. Released February 24.

THE CHANGELING.

The happy married life of George Norman is brought to a rude close with the death of his wife, who leaves him in her stead a tiny bahy. Within a few days Norman is called to Europe on husiness for a protracted stay and places his bahy in the hands of Nurse Roberts, who has other babies to take care of hesides Norman's. Norman's hahy dies and Mrs. Roberts, not wishing to have this source of income shut off, substitutes the child of a poor widow, who can seldom if ever pay for the bahy's keep anyway. Six years elapse and Norman returns and sends for his boy, who is now growing to he a sturdy youngster. Almost immediately his son shows a liking for the piano and Norman advertises for a music teacher. Who should answer this ad. but Mrs. Smith, the real mother of the boy. Things proceed nicely until one day Norman receives a letter from Mrs. Roherts, saying that she is about to die, and desiring to clear her conscience, tells him that the boy he calls his own is really the son of Mrs. Smith. Norman tells the music teacher, who is overjoyed, but at the moment of separation complications arise; the hoy has learned to love both. There is but one way out of it and the youngster sees it quicker than anyone else; and following his suggestion the two lonesome mortals agree that to marry each other is the only way by which hoth can enjoy the society of the one who has entwined himself ahout their hearts.—1,000 feet. Released February 25.

A COSTLY PLEDGE.

Lucy Martin waits in her cozy home wearily for her husband. Time creeps on apace. The waiting wife looks anxiously at the clock to find that the hands have crept around to 3:30. Finally John arrives. He has imbibed not wisely but too well. Lucy upbraids him for his weakness, but finally breaks down into a burst of passionate tears. John, repentant and anxious to square himself, tells her that he will never do it again, but Lucy is very doubtful as to the strength of his good resolutions. Finally John offers to sign a pledge, which he writes at his wife's dictation. The pledge binds John never to take another drink, and provides that should he do so, he will pay to his wife as a forfeit a sum of $500. Softened by John's willingness to atone, Lucy forgives him. Several weeks pass—poor John, thirsty and weakening escorts his wife to the station where she is leaving town for a visit to her folks, and immediately after her departure beats it to the nearest saloon for a longed for drink. In the meantime, Lawyer Robbins, one of John's friends, receives an invitation to a masquerade ball and decides to accept. He meets John coming out of a saloon, who tells him of his wife's absence, and the two plan to take in the ball together. They have another drink on it and then seek a costumer from whom John hires a bell boy outfit, and his friend the costume of a red cross nurse. John invites Robbins to make his home their headquarters during his wife's absence, and the two proceed there, stopping on the way for a number of drinks. They reach the house pretty far gone and John's ludicrous efforts to mix a high ball in a lamp chimeny provide comedy. The morning after the ball the two friends are found attired in their respective costumes—with oh, such heads, and well formed resolution to "never again." A ring at the door bell attracts their attention—they look out of the window—horrors—the wife is there, vigorously ringing the bell and waiting admittance. Consternation reigns. Finally John has an idea. His friend is attired as a nurse, and he will play sick, thereby gaining the sympathy of his wife. Hastily hiding all evidences of their debauch, John composes himself in what he fondly believes to be a correct invalid's pose, and Robbins, the supposed nurse, admits Mrs. Martin Fun fast and furious follows, but the young wife finally detects the imposition and makes John pay the penalty—a cash fine of $500.—Released March 3.

Among the Picture Theaters

FROM OUR CORRESPONDENTS.

KENTUCKY.

The steady growth of motion picture interests throughout Kentucky is a source of gratification to all concerned in the national amusement game. At present there is scarcely a city, town or hamlet in the broad realm of the Bluegrass that does not boast of its moving picture theater, some districts being comprehensive and profitable enough to support two or three, or perhaps a half dozen strictly up-to-date motion-play houses. One of the newspapers published in the heart of the Bluegrass pays tribute to the popularity of the motion picture in the following short editorial, which does not mention any playhouse and is in no wise designed as an advertising medium: "The picture shows continue to draw like a porous plaster. These entertainments have almost put the old-time road companies out of business."

One of the handsomest picture theaters in the Bluegrass has been definitely planned to be erected at Lexington, Ky., by the Hippodrome Theater Company, of which L. H. Rumsey is general manager. The new edifice will replace the present Hippodrome in the Bluegrass city and besides presenting a very handsome appearance will be modern in every respect for the comfort and safety of its patrons. Nearly 1,000 persons may find seats in the new Hippodrome at each performance, while details of fireproof construction, up-to-date heating and ventilation and entertaining programs have been carried out to perfection.

James W. Gillespie is to erect a beautiful motion picture house with a capacity of 800 persons at Chattanooga, Tenn. Plans have been completed for the structure which will cost in the neighborhood of $15,000 when completed. A soda fountain to provide liquid refreshment will be one of the features of the new playhouse.

ROLL OF THE STATES.

ALABAMA.

The Orpheum theater is the name of a new vaudeville and moving picture playhouse that recently opened its doors to the public at New Decatur. The new theater is up-to-date in every particular.

Messrs. Harvey and Tuggle are making arrangements to open a moving picture theater at Blockton.

The "Best" is the name of a handsome new vaudeville and moving picture house opened at 2016 Second avenue, Birmingham, under the management of Messrs. Lenhart and Barton. No expense or pains have been spared to make this one of the prettiest and most attractive houses of its kind in that section of the country.

Plans are being prepared by Architects Charles M. and Arthur F. Rousseau, of San Francisco, for a high-grade moving picture theater to be erected at Union and Octavia streets, that city. This playhouse will exhibit a good many new ideas, both in design and arrangement, and will offer the public a most up-to-date place of amusement. The seating capacity will be 800.

ARIZONA.

The New Airdome Theater is a late addition to the amusement places of Phoenix.

CALIFORNIA.

After being open two weeks the Sunburst moving picture theater of Riverside closed its doors, the reason given by the owners for their discontinuance being their inability to secure satisfactory films. The Pacific Amusement Company has been incorporated for the purpose of taking over the theater, which they propose to operate under the name of "The Pictureland." The company is incorporated with a capital stock of $20,000, and is composed of the following: C. E. Heath, S. W. Treptow and M. M. Heath. The house will be under the management of C. E. Heath.

The Dreamland, a moving picture theater, has been opened at the corner of Fifth and A streets, by Joseph Schwartz.

COLORADO.

As the result of an invention by a Denver boy that city bids fair to be the location of the first extensive factory for the manufacture of photographic paper for printing color photographs. The invention is that of H. G. De Roos, 26 years old, who has been working for more than ten years to perfect a process by which colors may be photographed. He has applied for a patent and is planning the organization of a manufacturing company in Denver. The paper has been pronounced a wonderful success by expert photographers. It has a wide range of colors, and is especially sensitive to delicate lights. One of its advantages over ordinary photographic paper is that it is developed in clear water.

CONNECTICUT.

Harry Gale, who has been operating a moving picture theater at Winsted, has opened a new house at Unionville.

DELAWARE.

Manager N. A. Jones of the Savoy, of Wilmington, will enlarge his house.

The Automatic Picture Machine Company, of Wilmington, has been incorporated with a capital stock of $1,000,000. The incorporators are W. N. Akers, M. C. Taylor and W. J. Maloney, all of Wilmington.

FLORIDA.

A new theater, which will be devoted exclusively to moving pictures, will be erected on Forsyth street, between Main and Ocean streets, Jacksonville. The new house will be operated by the Imperial Amusement Company, which is composed of the following persons: G. E. Leonard, president; N. W. Redmond, vice-president; W. H. Dodge, secretary. The company has applied for a charter and will be incorporated at $25,000. The new theater, which will be known as the Imperial, will be thoroughly modern and up-to-date in every respect. It will be under the active management of N. W. Redmond, who has a great deal of experience in the theatrical business.

The Amusu, a first-class moving picture theater owned by Messrs. Valentine and Strickland, of Eufaula, has been thoroughly overhauled and decorated, and opened under the management of Frank Valentine. The owners have offered a prize to the school girl or boy who will choose a new name suitable for the house.

The Grand is the name of a new moving picture and vaudeville theater opened in Fort Myers under the management of John T. Hendry. The new house is thoroughly up-to-date, and the management promises its patrons high grade entertainment.

The Montgomery Amusement Company is being organized at Jacksonville, with a capital stock of $100,000 by Frank T. Montgomery, H. C. Dorsey and John T. Alsop, Jr., all of that city, who will also be president, vice-president and secretary and treasurer respectively of the new company. The parties who are interested believe there is a brilliant future for the moving picture business in the South, and their intention is to establish a series of handsome picture theaters in principal Southern cities.

A. B. Vance of Jacksonville will open a moving picture theater at the corner of Hogan and Bay streets, that city, which will

be first-class and up-to-date in every respect. It will be finished in old ivory and will contain a beautiful box office of dome design, and finished in curved plate glass. The front will be unusually attractive and will also contain tile flooring. A feature of the new theater will be the illumination. The scheme of obscure lighting will be followed, which, with the aid of Tungsten burners, will produce a brilliant effect. In preparing plans for the theater especial attention has been given to ventilation and numerous wall, ceiling and exhaust fans will be provided. The theater will have a seating capacity of about 400, and the chairs will be of the latest design. The theater will be ready to open to the public in the very near future.

GEORGIA.

J. O. J. Lewis, proprietor of the Little Gem Theater at Thompson has moved his house to Greensboro, where he will continue to operate same.

The Belle is the name of a handsome new moving picture theater recently opened at Gadsden, by J. Roy Hunt, of Birmingham.

A new moving picture theater has been opened at Rome by J. B. Love.

IDAHO.

The Home Theater, of Meridian, formerly owned and operated by W. B. Williams, has been purchased by F. E. Nusbaum, who expects to sustain the excellent reputation which the house has hitherto enjoyed.

ILLINOIS.

A. R. Taylor, of Galesburg, has purchased the moving picture theater located on Main street, near Seminary, in that city. Mr. Taylor will show only the latest and best moving pictures and illustrated songs.

Articles of incorporation have been filed with the secretary of state at Springfield, for the Herbst Bright Light Motion Picture Company of Chicago. The capital stock is $2,000 and the incorporators are B. Cortelyou, J. C. Elias and H. A. Robinson.

Messrs. Nisby, Clark and Pete Campbell of Macomb have leased the airdome in that city and will open the same about May 1.

Messrs. La Grill and Middleton, who operate a first-class moving picture theater at Muscatine and several other places, have secured property in Sterling which will be converted into a moving picture house and will be ready for occupancy about March 1. Special attention will be paid to ventilation, and when completed they expect to have a pretty and attractive house. The firm is experienced in the moving picture field and announce they will run nothing but high class motion pictures, the very best and latest.

Messrs. Stone and Schwartz, proprietors, will open a new vaudeville and moving picture theater at Forty-seventh street and Emerald avenue, Chicago. The admission price will be five and ten cents, and the date set for opening to the public is February 25. A prize of ten dollars is being offered for a good name for the new theater.

O. G. Brown has opened a moving picture theater at Plainfield, under the management of Martin Moran. The admission price will be ten cents.

The New Vaudette of Gooding, after being thoroughly renovated and rearranged, has been reopened under new management, who announce that only attractions of the highest standard will be given.

The firm of Robinson & Zahler, of Peoria, have secured a permit to remodel the Liberty theater at 319 South Adams street, that city. When completed the house will be one of the prettiest in the city. The interior design will be mission.

The Star, a first-class moving picture house, was recently opened at Fulton.

The Grand Theater, 425 East Main street, Galesburg, has been purchased by Roy A. Taylor. At the first two exhibitions given by Mr. Taylor no admittance was charged. Several improvements have been made and new opera chairs will be added in the near future. Patrons are promised first-class entertainment in every particular.

The Advance Motion Picture Company, Chicago, has been incorporated with a capital stock of $2,000 by M. E. Vason, S. C. Parson and E. M. Volz.

Chester Robbins has reopened his moving picture theater at Saybrook, which has been closed for some time on account of the burning of the electric light plant.

The New Star is the name of a moving picture theater opened at Fulton under the management of Mr. and Mrs. Charles Cooley. This is the only picture theater in the place, and from the interest manifested at the opening the house bids fair to meet with success from the beginning.

Martin Moran, of Lockport, will open a moving picture theater at Plainfield.

The Dreamland, a moving picture theater, has been opened at Pittsfield.

The Bungalow Theater, of Jacksonville, has been purchased by Wm. Stevenson.

The Majestic Theater, an exclusive moving picture house, has been opened at De Kalb by W. D. Eppstein.

INDIANA.

The Gem Theater, of Gary, which has been closed for some time, has been reopened as a moving picture house instead of vaudeville. The proprietors, Savage Brothers, have installed one of the most up-to-date motion picture machines, with a mirror screen in connection.

The Majestic moving picture theater at La Grange, formerly owned by Jap Wilson, has been purchased by Harley Aldrich, who will no doubt make it a success.

C. E. McNairy has opened a moving picture theater at Tipton. The patrons were asked to submit names for the new house, the party submitting the name used to receive a season ticket.

IOWA.

The theater at Ocheyedan will be conducted as a moving picture theater by Walter Beckwith, who recently purchased it.

Messrs. Charles O'Connell and Joe Cowin have purchased the Majestic Theater at Cedar Falls, and will operate it as a first-class moving picture house.

The Unique Theater, of Spencer, formerly owned and operated by Wm. Cornish, has been purchased by Messrs. Deever and Sheean, of Forest City. They are experienced in the line and promise to give their patrons high-grade entertainment. The Unique has been quite a success, and it is the purpose of the new owners to maintain the high standard heretofore attained.

The Electric Theater, of West Union, has been reopened under the name of the Pastime by F. C. Fuller and J. H. Millar. It is the purpose of the new owners to conduct a high-grade house.

The Princess Theater, recently fitted up at Cedar Rapids by Messrs. Diebold and Young, sustained a loss of $5,000 by fire. The loss was fully covered by insurance.

W. L. Gleason, of Moberly, Mo., contemplates opening a moving picture theater at Shenandoah.

A deal has been closed whereby the Model theater of Manchester, formerly owned by Alton Durham, has been purchased by Cal Martin.

The Gem theater, of Forest City, formerly owned by L. L. Bixby, has been purchased by a Mr. Porterfield of Hubbard, who will operate a first-class moving picture house, giving nothing but high grade entertainments.

KANSAS.

The Crysal and Pastime Theatrium moving picture houses of Hoisington, have been consolidated. Messrs. Pitzinger and Johnson is the name of the new firm. They will not operate the Pastime at present, but will devote all their time to the Crystal.

The Knights of Columbus, who own the opera house at Ellinwood, have purchased the People's Theater in that place, and will conduct it in connection with the opera house.

MAINE.

The Fairyland Theater, of Camden, formerly owned and operated by Roland Crockett, has been purchased by Messrs. Sylvesta and Chapman.

MICHIGAN.

The Gem, the pioneer exclusive picture house of Kalamazoo, has just undergone extensive improvements and changes among which was the installation of a mirror screen, raising the floor to insure a better view, also the addition of a miniature stage.

MINNESOTA.

Messrs. Hamilton and Blanding are preparing to open a moving picture theater in Detroit in the near future.

F. F. Freund will open a moving picture theater at Red Lake Falls. If he cannot secure a suitable building, he will erect one.

MISSISSIPPI.

The "Nusho" is the name of a handsome modern and up-to-date moving picture theater recently opened in Vicksburg by Mulligan Brothers. The house is neatly furnished and thoroughly equipped and is an ornament to the city.

MISSOURI.

The Casabianca Amusement Company has been incorporated at St. Louis, with a capital stock of $100,000. The incorporators are W. A. Fortner, John E. Alber, W. R. Richardson and H. G. Clymer. It is the purpose of the company to erect a moving pic-

ture theater at Olive street and Grand avenue to cost $30,000.

The Grand Opera House, one of the landmarks of St. Louis, is being remodeled at a cost of $100,000 by the Middleton Theater Company, of which Frank R. Tate is manager, and will be opened as a five and ten-cent vaudeville and moving picture house. The Grand Opera House has been an amusement place for fifty-eight years, and at one time was the leading theater of the city. The seating capacity will be 3,000.

The old Grand Opera House of St. Louis, located on Market street, will be converted into a vaudeville and moving picture house at a cost of nearly $100,000. The house will be under the management of F. R. Tate, and the admission price will be five and ten cents.

The Majestic moving picture theater on South street, Springfield, formerly owned by T. E. Hornbeak, has been purchased by S. W. Wilkins, who has had extensive experience in the moving picture business, and has been head operator at the Grand theater on Pupblic Square for some time. He will continue the Majestic on the same plan pursued there as before, adding improvements from time to time as he may deem wise.

F. J. Duvall and Dr. E. M. Bartlett, of Louisiana, who are jointly interested in several enterprises in that city, will open a moving picture theater in that place as soon as the necessary apparatus can be installed.

O. T. Crawford and Frank Talbot, owners and managers of the Lyceum theater of St. Louis, have dissolved partnership, Mr. Crawford having disposed of his interests in order that he may devote his attention to vaudeville. Mr. Crawford has erected five first-class fireproof theaters in St. Louis during the past year, costing from $45,000 to $55,000, and having seating capacities of 1,250 to 1,500.

The Princess is the name of a handsome picture house recently opened in North Springfield, with a seating capacity of 327. It is located on Commercial street.

NEBRASKA.

The Princess Theater Company of Omaha has been incorporated with a capital stock of $10,000 by Samuel H. Goldberg and Harry L. Goldberg.

The Royal theater of Ainsworth has been purchased by Shrider Brothers.

The opera house at Pierce has been leased by P. H. Goldstone, who will conduct it as a vaudeville and moving picture house.

Wm. Armstrong, Erick Jensen and Wm. Allgair, of South River, have organized a moving picture company for the purpose of giving moving picture exhibitions.

Articles of incorporation have been filed with the secretary of state for the Auditorium Amusement Company with a capital stock of $150,000. The incorporators are Wesley Lanning, George B. La Barre and John A. Dowling.

A moving picture and vaudeville theater will be erected at Fremont by Scott Wall. The new structure will be 44 by 135 feet, and will have a seating capacity of 650. It will be modern and thoroughly up-to-date in every particular.

NEW YORK.

The Cineton Company of America, Manhattan, has been incorporated with a capital stock of $10,000 for the purpose of manufacturing and dealing in moving picture machines, films and supplies. The incorporators are Julius Sorge, 327 West 12th street, New York City; Arnold S. Bosse, Bath Beach, Brooklyn; Henry Newman, 211 West 148th street, New York City.

The Star theater at Kingston, has been purchased by Frederick J. Ireland, who has reopened it as a vaudeville and moving picture house.

Plans have been filed for a moving theater to be erected on the north side of Grand street, near Allen, New York City, for John Cadwalader. The estimated cost is $7,500.

Benjamin Mindlin, president of the Liberty theater, Brooklyn, has opened a moving picture theater at the corner of Ames street and Pitkin avenue, that city.

The Dreamland is the name of a new moving picture theater recently opened at Peekskill by Messrs. Cuff and Anderson, who operate two picture houses in Paterson, N. J.

James Ball, who is known as the pioneer of the motion picture business in Utica, has leased the Star theater of that city.

The Queen's Theater Company, of New York, has been incorporated for the purpose of conducting moving picture theaters and other places of amusement. The capital stock is $5,000, and the directors are Henry Stedecker, 1264 Lexington avenue; Arthur Kurtz, 269 West 118th street, New York City; Henry W. McClosky, Freeport, L. I.

The New York Apollo Theater Company has been incorporated to erect and maintain theaters and other places of amusement. The capital stock is $125,000. The incorporators are Edward F. Rush, Max Spiegel, Columbus Theater Building; Thomas F. MacMahon, 1402 Broadway, New York.

Thomas F. Connelly, proprietor of the Old Happy Hour Theater, of Elmira, will erect a new house on the site of the present building at a cost of $30,000, which will be devoted to vaudeville and moving pictures. The house will have a seating capacity of 1,800, and the price of admission will be five and ten cents.

Messrs. Antonakas and Papas will open a moving picture theater at 320 Main street, Poughkeepsie.

OHIO.

A handsome new moving picture theater, the Lyceum, has just been opened at Findlay. The theater is said to be the finest equipped picture house in northwestern Ohio. The house is finished in old ivory and gold, has a large plate glass box office, and the entrance is finished in mahogany. The foyer is furnished with leather seats and mirrors on all sides, while the auditorium is seated with opera chairs. The interior decorations are pink and green. The orchestra pit is just under the screen and is large enough to accommodate ten persons. The entrance is the most attractive in the city. The house is perfectly ventilated.

The Findlay Street Theater is the name of a new theater opened at 323 Findlay street, Cincinnati, under the management of Jack Wehnoff. At present the house will be devoted to pictures, but vaudeville will be added later.

A contract has been let for the erection of a moving picture theater at Thirty-fourth and Cedar streets by the E. P. Ziedler Drum and Amusement Company, which is composed of the following: President, F. Koser; vice-president, A. F. Theck; manager and secretary, E. P. Ziedler. The house, which will be known as the Cedar, will have a seating capacity of between 300 and 400 and will be completed about April.

The Lyric, a vaudeville and moving picture house, was recently opened at Lima.

The Empress is the name of a new moving picture house to be opened at 406 Summit street, Toledo, which will be under the management of J. Bernard Gardner, of the Arcade theater. Several new inventions in motion photography are to be introduced and vaudeville may be added later, but for the present it will be devoted exclusively to motion pictures. The house has a seating capacity of 400.

The Doan Amusement Company has secured permission to erect a theater on St. Clair avenue, near East 105th street, Cleveland, at a cost of $10,000.

The Isis Theater, which has just been erected at the corner of Superior avenue and 89th street, Cleveland was recently opened to the public.

The Luna Theater, of Girard, has been leased by Fred Wilson.

PENNSYLVANIA.

The Drury theater, a moving picture and vaudeville house located at Germantown avenue and Thirteenth street, Philadelphia, has been purchased by Messrs. Conway and Cullen.

SOUTH DAKOTA.

The Bijou is the name of a new moving picture theater recently opened at Rapid City.

UTAH.

The St. George Amusement Company of Salt Lake City has been incorporated with a capital stock of $7,000 for the purpose of conducting moving picture shows and other places of amusement. The officers of the company are as follows: President, Charles Whipple; vice-president, S. C. Hardy; secretary and treasurer, William A. Nelson.

The citizens of Vernal have organized an amusement company with a capital stock of $15,000 for the purpose of erecting a new opera house. The estimated cost is $10,000. The officers of the company are as follows: President, H. B. Calder; vice-president, Ed. D. Samuels; secretary and treasurer, R. S. Collett; directors, B. O. Colton, Jr., Ed. J. Winder, John C. Bates and B. D. Nebeker.

Harry Revier, owner of the Majestic moving picture theater of Salt Lake City, is negotiating for the sale of the same to parties from Butte, Mont. The deal is said to involve a sum between $8,000 and $10,000. The Revier of that city, which presents other attractions, is also owned by Mr. Revier, and it is stated he will also dispose of this house and will acquire others.

WISCONSIN.

The Gem theater at River Falls has been reopened by C. P. Andrews and A. N. Wolff.

Record of Current Films

Believing the classification of film pictures by the nature of their subjects to be of greater importance to the exhibitor than classification by maker, The Nickelodeon has adopted this style in listing current films. Exhibitors are urged to make use of this convenient tabulation in making up their programs. Films will be listed as long in advance of their release dates as possible. Film manufacturers are requested to send us their bulletins as early as possible. Reasonable care is used, and the publishers cannot be responsible for errors.

LICENSED

Date.	Title.	Maker.	Length.
	DRAMA		
1-30	The Little Circus Rider	Selig	
1-30	The Escape from the Tuileries	Pathé	1,000
1-30	A Wreath of Orange Blossoms	Biograph	993
1-31	Jean Rescues	Vitagraph	970
1-31	The Last Curtain	Gaumont	823
2-1	The Sheriff's Sister	Kalem	1,000
2-1	Disinherited	Eclipse	990
2-2	Age vs. Youth	Lubin	1,000
2-2	Curse of the Red Man	Selig	1,000
2-2	Only a Sister	Malies	980
2-2	Three Sisters	Biograph	997
2-3	Selling Old Master	Edison	990
2-3	The Trail of the Pomos Charm	Kalem	1,005
2-3	The Slave's Revolt	Pathé	722
2-3	Society and the Man	Vitagraph	880
2-4	A Cowboy's Devotion	Pathé	1,000
2-4	Carmenita, the Faithful	Essanay	995
2-6	Heart Beats of Long Ago	Biograph	997
2-7	The Doctor	Edison	1,000
2-7	The Deluge	Vitagraph	
2-7	The Strongest Tie	Gaumont	605
2-8	Little Sister	Kalem	970
2-8	Legally Dead	Pathé	1,000
2-8	On the Border of the Forest	Eclipse	895
2-9	Tony the Greaser	Melies	980
2-9	Thelma	Selig	1,000
2-10	The Missing Bride	Pathé	800
2-10	His First Commission	Edison	990
2-10	The Broken Trail	Kalem	1,000
2-10	The League of Mercy	Vitagraph	
2-11	Silver Leaf's Heart	Pathé	1,000
2-11	At the White Man's Door	Vitagraph	
2-11	The Bad Man's Downfall	Essanay	1,000
2-11	Napoleon in 1814	Gaumont	797
2-13	What Shall We Do with Our Old?	Biograph	994
2-13	A Show Girl's Stratagem	Lubin	1,000
2-13	The Survival of the Fittest	Selig	1,000
2-14	The Rajah	Edison	1,000
2-14	Consuming Love	Vitagraph	
2-15	Catherine Howard	Eclipse	1,005
2-15	Grandmother's War Story	Kalem	975
2-15	A Western Courtship	Pathé	734
2-16	Fisher Folks	Biograph	998
2-16	The Buccaneers	Selig	1,000
2-16	Billy and His Pal	Melies	980
2-17	A Stage Romance	Edison	
2-17	The Lost Ribbon	Kalem	1,000
2-17	When the Light Waned	Vitagraph	
2-17	A Boy's Wit	Pathé	462
2-18	Lieut. Scott's Narrow Escape	Pathé	1,000
2-18	The Cattleman's Daugher	Essanay	1,000
2-18	Saul and David	Gaumont	128
2-18	At the End of the Road	Gaumont	838
2-20	The Diamond Star	Biograph	996
2-20	The Padre	Selig	1,000
2-20	The Test	Lubin	1,000
2-20	A Soldier	Pathé	761
2-21	The Rival Sculptors	Edison	990
2-21	The Plot that Failed	Gaumont	815
2-21	A Tale of Two Cities—Part 1	Vitagraph	
2-22	The Open Road	Kalem	995
2-22	The Golden Sickle	Eclipse	882
2-23	His Daughter	Biograph	997
2-23	My Prairie Flower	Melies	980
2-23	The Seminole's Sacrifice	Selig	
2-24	The Price of Victory	Edison	1,000
2-24	Priscilla and the Pequot	Kalem	925
2-24	A Tale of Two Cities—Part 2	Vitagraph	
2-25	The Outlaw and the Child	Essanay	1,000
2-25	A Tale of Two Cities—Part 3	Vitagraph	
2-25	The Changeling	Pathé	1,000
2-25	Paganini and the Countess Beatrice	Gaumont	998
2-27	The Lily of the Tenements	Biograph	996
2-27	The Eye of Conscience	Selig	1,000
2-28	The Iron Master	Edison	
3-1	Sailor Jack's Reformation	Kalem	1,005
3-1	Comrades	Eclipse	638
3-2	The Heart of a Savage	Biograph	991
3-2	In the Hot Lands	Melies	980
3-2	The Outbreak	Selig	1,000
3-3	The Writing on the Blotter	Edison	
3-3	Mexican Filibusters	Kalem	1,005
3-3	Bertha's Mission	Vitagraph	..
3-4	On the Desert's Edge	Essanay	1,000
3-4	The Tramp's Find	Gaumont	680
3-4	Jealousy Foiled	Pathé	1,000
3-4	Mammy's Ghost	Vitagraph	
	COMEDY		
1-30	His Bogus Uncle	Lubin	1,000
1-31	The Jilted Joker	Essanay	640
1-31	Hank and Lank—They Make a Mash	Essanay	366
2-1	Bumptious as Romeo	Edison	975
2-1	Hearts, Hunger, Happiness	Pathé	690
2-4	A Queen for a Day	Vitagraph	995
2-4	Jiggers Looks for a Job	Gaumont	537
2-6	A Double Elopement	Lubin	990
2-6	Max Has the Boxing Fever	Pathé	561
2-6	Too Much Mother-in-Law	Selig	1,000
2-6	An Imitator of Blondin	Pathé	400
2-7	A Woman's Voice	Essanay	
2-7	Ten Words for Twenty-Five Cents	Essanay	
2-7	Jiggers' Moving Day	Gaumont	895
2-8	Two Valentines	Edison	1,000
2-9	Priscilla's Engagement Kiss	Biograph	997
2-9	The Petticoat Sheriff	Lubin	1,000
2-13	Betty's Apprenticeship	Pathé	689
2-14	Getting Sister Married	Essanay	1,000
2-14	The Reformation of the Suffragettes	Gaumont	665
2-15	The Ransom of Red Chief	Edison	
2-16	Getting Even	Lubin	600
2-16	Schultz Has the Smallpox	Lubin	400
2-17	Whiffle's Double	Pathé	499
2-18	The New Stenographer	Vitagraph	
2-21	Their Wedding Gifts	Essanay	580
2-21	Just as the Clock Struck Nine	Essanay	412
2-22	Mr. Bumptious, Detective	Edison	990
2-22	Hubby's Troubles	Pathé	672
2-23	Dobbs, the Dauber	Lubin	1,000
2-24	Who Killed Max?	Pathé	689
2-24	An Escape of Gas	Pathé	302
2-27	Nan's Diplomacy	Lubin	1,000
2-28	Taming a Tyrant	Essanay	1,000
2-28	Matrimonial Epidemic	Gaumont	813
2-28	Captain Barnacle's Courtship	Vitagraph	
3-1	Rival Candidates	Edison	
3-1	Oh, You Clubman!	Pathé	1,000
3-2	Father's Birthday Ring	Lubin	700
3-2	Woman's Curiosity	Lubin	300
3-4	Forbidden Cigarettes	Gaumont	335
	SCENIC		
1-31	At Eventide	Gaumont	173
2-4	Krimmel Waterfalls	Gaumont	435
2-10	Review of Chilean Troops	Pathé	180
2-11	Autumn Leaves	Gaumont	185
2-13	Pineapple Cannery in China	Pathé	315
2-14	Land Marks of Avignon	Gaumont	338
2-22	Felling a Smoke-Stack	Eclipse	113
2-22	Province of Laos, Indo-China	Pathé	321
3-1	Beauties of San Souci	Eclipse	362
	INDUSTRIAL		
2-1	Practical Brook Trout Breeding	Pathé	279
2-3	The Rice Industry in Japan	Pathé	256
2-8	Canadian Iron Center, Port Arthur	Eclipse	110
	SCIENTIFIC		
2-15	The Axolotl	Pathé	266
2-21	Pictures in Chemistry	Gaumont	175
	SPORTS		
2-20	A Buffalo Hunt	Pathé	236
2-28	Lafont and Pola's Last Flight	Gaumont	185

DAILY LICENSED RELEASES.

MONDAY: Biograph, Lubin, Pathe, Selig.

TUESDAY: Edison, Essanay, Gaumont—Kleine, Vitagraph.

WEDNESDAY: Edison, Kalem, Eclipse—Kleine, Pathé.

THURSDAY: Biograph, Lubin, Melies, Selig.

FRIDAY: Edison, Kalem, Pathe, Vitagraph.

SATURDAY: Essanay, Gaumont—Kleine, Pathe, Vitagraph

INDEPENDENT

Date.	Title.	Maker.	Length.
	DRAMA.		
1-30	The Genius	American	965
1-30	The Taxicab Mystery	Yankee	
1-31	For My Pal	Powers	
1-31	Only in the Way	Thanhouser	
2-1	A Brass Button	Reliance	900
2-1	His Great Sacrifice	Atlas	
2-1	Judged by Higher Power	Champion	950
2-1	The Bridal Trail	Nestor	
2-2	The Mission in the Desert	American	985
2-2	Coachman of the Village	Itala	900
2-3	The Counting House Mystery	Yankee	
2-3	Adrift	Thanhouser	
2-3	A Squaw's Bravery	Bison	900
2-3	Back to the Old Homestead	Lux	944
2-4	The Command from Galilee	Reliance	900
2-4	The Cattle King of Arizona	Powers	
2-4	The Criminal Chief's Capture	Great Northern	
2-6	A Pittsburg Millionaire	American	985
2-6	Doctor Against His Will	Eclair	984
2-6	At the Duke's Command	Imp	1,000
2-6	Foiling the Camorra	Yankee	
2-7	The Half-Breed's Plan	Bison	900
2-8	Kelly, U. S. A.	Atlas	
2-8	The Transgressor	Nestor	
2-8	The Schoolma'am's Courage	Reliance	900
2-9	John Milton	Itala	900
2-10	Was She Justified?	Yankee	
2-10	The Norwood Necklace	Thanhouser	
2-10	The Salted Mine	Bison	900
2-10	The Orphan's Friend	Lux	711
2-11	Found Again	Great Northern	
2-11	The Angel of His Dream	Powers	
2-11	The Little Avenger	Reliance	900
2-13	The Elixir of Bravery	Eclair	424
2-13	Her Darkest Hour	Imp	1,000
2-13	Condemned to Death	Yankee	
2-14	For Her Sake	Thanhouser	
2-14	The Deputy's Honor	Bison	900
2-15	Coals of Fire	Atlas	
2-15	Three Men	Reliance	900
2-15	The Light Beyond	Nestor	1,000
2-15	The Demon	Ambrosio	900
2-16	In the Iand of Cactus	American	1,000
2-16	The Convert	Imp	1,000
2-16	A Heroine of '76	Rex	910
2-16	The Fatal Charm	Itala	900
2-17	Checkmate	Thanhouser	
2-17	Bronco Bill, the Brave Cowboy	Lux	639
2-17	The Warrior's Squaw	Bison	900
2-18	Under Southern Skies	Powers	
2-18	The Life of a Muschik	Great Northern	
2-18	Souls Courageous	Reliance	900
2-20	The College Spendthrift	American	900
2-20	The Heart of a Warrior	Eclair	683
2-20	Pictureland	Imp	1,000
2-20	A Lifetime Penance	Yankee	
2-21	For Washington	Thanhouser	
2-21	The Way of the Red Man	Bison	900
2-22	The Redeeming Angel	Ambrosio	500
2-22	The Old Man and Jim	Champion	950
2-22	A Plain Tale	Reliance	900
2-22	His Father's House	Nestor	1,000
2-23	Strategy	American	980
2-23	Artful Kate	Imp	1,000
2-23	The Story of a Prayer Rug	Rex	
2-23	Little Souls	Itala	900
2-24	The Fate of Joe Dorr	Bison	900
2-24	A Child's Prayer	Lux	534
2-24	Love's Test	Solax	
2-24	A Newsboy Hero	Thanhouser	
2-24	The Woman Who Dared	Yankee	
2-25	Across the Mexican Border	Powers	
2-25	Ever the Accuser	Reliance	900
2-25	His Great Duty	Great Northern	
2-27	The Sheriff's Sweetheart	American	800
2-27	Punch	Eclair	595
2-27	All for Gold	Yankee	
2-27	A Manly Man	Imp	1,000
2-28	The Call of the Heart	Powers	950
2-28	The Little Mother	Thanhouser	
3-1	A Western Girl's Choice	Champion	950
3-1	The Trump Card	Reliance	900
3-1	The Professor's Romance	Nestor	990
3-2	College Chums	American	975
3-3	Stage Struck	Thanhouser	
3-4	Home Sweet Home	Powers	950
	COMEDY		
1-30	Maid or Man	Imp	995
1-30	The Emperor's Lunch	Eclair	603
1-30	The Elusive Robber	Eclair	373
1-31	A Tough Tenderfoot	Bison	900
2-1	The Return from Seaside Bathing	Ambrosio	500
2-1	Tweedledum Tries Winter Sports	Ambrosio	500
2-2	An Imaginary Elopement	Imp	500
2-2	The Mix-Up	Imp	500
2-3	Ring of Love	Solax	
2-4	The Feast of Foolshead	Itala	900
2-7	The Westerner and the Earl	Thanhouser	
2-7	Ferdie's New Shoes	Powers	
2-8	At Double Trouble Ranch	Champion	
2-8	Tweedledum as a Detective	Ambrosio	500
2-9	On the Installment Plan	American	560
2-9	Too Much Aunt	American	430
2-9	The Mirror	Imp.	500
2-9	When the Cat's Away	Imp.	500
2-10	Mixed Pets	Solax	
2-10	That Horse Did Run	Lux	272
2-11	Foolshead at the Kinematograph	Itala	900
2-13	A Quiet Evening at Home	American	1,000
2-13	Mr. Faddleaway is on Strike	Eclair	522
2-14	An Unforeseen Complication	Powers	
2-15	Her Three Proposals	Champion	950
2-17	Corinne in Dollyland	Solax	
2-17	Her Birthday Surprise	Yankee	
2-21	What Would You Do	Powers	
2-17	Matilda Lovestruck	Lux	272
2-18	Who Will Eat the Turkey	Itala	900
2-18	The False Alarm	Great Northern	
2-22	Tweedledum Is Shy	Ambrosio	500
2-24	Matilda Chased	Lux	354
2-25	Foolshead's Present	Itala	500
2-25	The Havana Cigar	Itala	500
2-27	The Silence System	American	200
2-27	Beware of the Bomb	Eclair	370
3-2	The Dynamiters	Imp	500
3-3	A Costly Pledge	Solax	
3-3	The Abandon of Parson Jones	Yankee	
	SCENIC.		
2-8	The Savoy Cavalry	Ambrosio	500
2-11	A Trip Through Mexico	Powers	
2-20	Hospital for Small Animals	Eclair	286
2-21	The Mexican Centennial	Powers	
3-2	Army Maneuvers in Cuba	Imp	500

DAILY INDEPENDENT RELEASES

MONDAY: American, Eclair, Imp, Yankee.

TUESDAY: Bison, Powers, Thanhouser.

WEDNESDAY: Ambrosio, Atlas, Champion, Nestor, Reliance.

THURSDAY: American, Imp, Itala.

FRIDAY: Bison, Lux, Solax, Thanhouser, Yankee.

SATURDAY: Columbia, Gt. Northern, Itala, Powers, Reliance.

THE NICKELODEON

$2.00 Per Year | Published Weekly by ELECTRICITY MAGAZINE CORPORATION, Monadnock Building, Chicago | 10 Cents Per Copy

Vol. V | CHICAGO, MARCH 4, 1911 | No. 9

The Nickelodeon

Published Every Saturday by the

ELECTRICITY MAGAZINE CORPORATION

MONADNOCK BUILDING, CHICAGO

Long Distance Telephone: Harrison 3014

Ed J. Mock and Paul H. Woodruff, Editors James B. Crippen, Associate Editor

New York Office: 1433 Hartford Bldg., 41 Union Square
LAURENCE F. COOK, Eastern Representative
Telephone, Stuyvesant 1672

London Office: 36 Maiden Lane, Covent Garden
S. RENTELL & CO., Representatives

Table of Contents

TERMS OF SUBSCRIPTION

United States, Cuba and Mexico, $2.00 per year; Canada, $2.50 per year; Foreign countries within the Postal Union, $3.00 per year; Single Copy 10 cents.

Distributing Agents: The Western News Company and its International Branches.

NOTICE TO ADVERTISERS

Changes of advertising copy should reach the office of publication not less than five days in advance of date of issue. Regular date of issue, Saturday of each week. New advertisements will be accepted up to within three days of date of issue, but proof of such advertisement can not be shown.

NOTICE TO SUBSCRIBERS

Remittances should be made by check, New York draft or money order, in favor of THE NICKELODEON. Foreign subscriptions may be remitted directly by International Postal Money Order, or sent to our London office The old address should be given as well as the new, and notice should be received two weeks in advance of the desired change.

Scene from the Nestor Feature Film, "In the Commissioned Ranks."

THE NICKELODEON

AMERICA'S LEADING JOURNAL OF MOTOGRAPHY

Vol. V Chicago, March 4, 1911. No. 9

IMPORTANT ANNOUNCEMENT

When its issue dated March 25 is off the press, THE NICKELODEON will cease publication. In its stead, and as its successor will be issued MOTOGRAPHY, a monthly journal. The first edition of MOTOGRAPHY, will appear April 15.

THE NICKELODEON was started January, 1909, as a high grade monthly trade journal. But the trade clamored for a weekly paper. To meet this demand half way, and against their better judgment, its publishers began issuing it semi-monthly in January, 1910. But even this step did not suffice. Those who refused to co-operate in the work of building a constructive semi-monthly publication unqualifiedly promised their support to a weekly paper. Still believing in the monthly, but influenced by the desire to serve the trade on its own ground and in its own way, the publishers again changed the frequency of issue, and began publishing THE NICKELODEON weekly in January, 1911.

No portion of the co-operation promised the weekly NICKELODEON has ever materialized. THE NICKELODEON has not failed to win support in its field through any shortcomings of its own. It has frequently been accused, by those in the trade, of going over its readers' heads —of being too high-class for its field. We know this is not true. The better class of exhibitors, almost to a man, are enthusiastic in their praise of THE NICKELODEON. Indeed, it has been our observation that the manufacturer and renter has underestimated the intelligence of the exhibitor, on the whole.

We have tried to make THE NICKELODEON an influence for the betterment and uplift of the motion picture industry, yet we have not succeeded in gaining the sincere support of the commercial interests of the industry. One of our contemporaries, on the other hand has endeavored to maintain a publication calculated to cater to those commercial interests, and still has been betrayed by them. Because of this lack of principle and absence of commercial honor in the majority of the men of the motion picture trade, we have determined to waste no more time and money in proffering aid to a graceless cause.

It is worth noting in passing as gauging accurately the mental caliber of those business adventurers now associated with the business that the largest, most powerful and only well established faction of this vast and wealthy industry has as its only journalistic representative a puny organ so inadequate and puerile that it has quoted from our pages because its own admittedly could not ask credence anywhere!

It will be the purpose of MOTOGRAPHY to specialize on the use of motion pictures, and projection in general, in education, commerce and scientific investigation. This field, before long will be larger than the entertainment field, and THE NICKELODEON has already established and will confer upon its successor an enviable reputation in these circles. We know that motography is only in its infancy, and that its entertainment feature is destined soon to become its smallest part. THE NICKELODEON has a few friends in the trade who have always believed in it, and have substantially evidenced that belief. To these we extend our apologies that we must seem to include them in a general arraignment of those now in control of the industry. Knowing however, that they agree with us, we hope and expect to retain their esteem.

The motion picture business is big enough and remunerative enough to attract into it some day men of real business integrity and business methods, who will bring to its aid some of those qualifications of common honesty and intelligent handling which it now so sadly lacks.

MOTOGRAPHY will continue to serve the picture theater exhibitor who is permanently established and genuinely interested in his profession. THE NICKELODEON will, of course hand over to its successor its own large circulation in this field. But MOTOGRAPHY, while recognizing the entertainment field, will be in no sense a showman's paper. It will serve a broader and more useful field.

OLD STORIES.

An objection frequently brought against photoplay stories is that they are old. "Oh, that's old!" people mutter, with a chestnut flavor in their tone. They obviously are not pleased. Now, a thing that is old is not necessarily bad, as old friends, old wine, old coins, would testify. Oldness often gives value to a thing that would be valueless without it. But when a story gets old it has lost its prime virtue, the ability to create surprise or suspense. People know just how it is going to turn out and are not interested.

Are all interesting stories new, then? No, they are not. Who would presume to say that any story was really new? The majority of photoplay stories are old as the hills; but to be effective they must have some point of novelty, some new combination of the old elements. Some little detail must be different.

With a clever handling of detail, the oldest plot may be made entertaining. Take, for instance, that very effective photoplay released not long ago under the title "A Sin Unpardonable." This tells the story of a man who stole a kiss from his friend's wife, much against her will. She relates the incident to her husband, who is angered by the insult and goes out to obtain revenge. He finds the man and inflicts considerable punishment upon him. So far this little drama is so old as to scarcely deserve that designation; it is not drama, but life, and must have been enacted daily as far back as the stone ages. But at this point the novelty creeps in. The husband has wreaked a more thorough-going vengeance than he had intended, for the man appears to be dead. The husband returns home in remorseful consternation. The wife is no less consternated than himself. They prepare to flee the country. But suddenly the door swings open and there is the battered man leaning against the threshold, looking like a ghost. This is a surprise and most thrilling. He has dragged himself thither to beg their forgiveness. They forgive him and he departs into the night. A very strong scene, and with enough surprise in it to hold breathless attention. The photoplay, as a whole, was composed of about ten parts antiquity to one part novelty, but that little part was sufficient to leaven the whole lump.

An even better example of the power of fresh detail is to be found in another recent release entitled "The Show Girl's Stratagem." An artist has invited a married woman, with whom he is infatuated, to a clandestine supper at his studio. The husband learns of it and follows—with a gun. A show girl, related to the family, learns of the situation and rushes on ahead, determined to avert the impending tragedy. She arrives at the studio in time to warn the wife, who leaves at once, the show girl taking her place. When the husband arrives his wrath is turned to surprise at finding the show girl instead of his wife, and he departs satisfied that it was all a mistake. Now, this is a very trite situation and never would have done if left just there. The producer shrewdly realized this, and injected a touch of novelty for the climax. After the husband has departed, the artist pours out two glasses of wine, and drinks to the show girl in gratitude and admiration. The girl hesitates and he urges her to join him. She gazes from the glass to him and from him to the glass. Her face is a mask. Suddenly her lips curl with contempt, she dashes the wine in his face and walks out of the room. The action was so sudden and so immensely effective that it brought a gasp from the audience. The incident had no necessary relation to the plot and could have been eliminated as well as not; but it made the play. The plot would have been nothing without it. It was an extraneous bit of novelty that gave luster to the whole piece.

Another effective photoplay of recent date was "Fisher Folks," the plot of which could not lay claim to a single element of novelty. It simply related the story of a man who was lured away from his wife by a coquette and was brought back again by the birth of a child. The story was well worked up in detail, but the principal point of novelty was the environment. They were all fisher folk living close to the sea, and the peculiarities of such a life an dpeople added enough novelty to the story to make it freshly interesting.

If there is any conclusion to be drawn from these ruminations it is as follows: A story, like a woman, is only as old as it looks. With clever manipulation it can be made to assume all the attractiveness of youth. It is the details that count, and if these be fresh and effective the plot as a whole may be as old as creation. Let us hear no more objections to stories because they are "old." It simply means they are badly told.

THE LAST WORD ON SCREEN PROFANITIES.

In an editorial entitled "Those Lip Movements," appearing in the issue of February 11, The Nickelodeon took occasion to remark upon the extreme absurdity of a story that was agitating the press relative to certain improper expressions alleged to have shocked the sensibilities of deaf people who had read them on the lips of motion picture actors. In confirmation of our attitude we reprint the following letter that came t oour office. It is from George W. Veditz, an authority on all matters that pertain to the deaf and dumb, and chairman of the Congress of Deaf and Dumb which was held last summer in Colorado Springs.

The stuff that has lately been going the rounds of the daily press that deaf mutes have had their moral sensibilities shocked by vulgarities or profanities alleged to be indulged in by the actors in photoplays is the veriest nonsense.

In the first place the vocabulary of profanities and vulgarities that the deaf may possess is exceedingly limited. They would not recognize such expressions were they to really see them on the lips of the photoplay actor.

In the second place there is no deaf-mute living whose accomplishment in the art of lip-reading is so extraordinarily developed that he could follow in unbroken sequence the lip movements of film actors. Correct lip-reading requires that the face of the speaker should be in full view, and where the profile or quarter face only is seen, and the actor is, moreover, moving about, this lip reading becomes exceedingly difficult. I myself have never been able to catch more than an occasional word, and my wife, who is one of the best of lip-readers, has likewise never seen an expression that could be criticized as offensive.

It is the suggestiveness of the photoplay as a whole that must be regarded from a moral standpoint, and this matter can safely be left to the Board of Censors. An occasional expletive can be tolerantly overlocked as demanded by the play, for there are situations where even a saint may swear.

The whole story of this offended morality on the part of the deaf is merely a bit of fertile imagination by some cub reporter. The deaf enjoy the photoplay immensely and will continue to patronize it as before. I know of some in this city who go every night in the week except Sunday and then stay away for the simple reason that there is no show running.

Ordered from the Miser's Home.

"Good Fellows" Help a Fainting Woman.

Chicago's "Good Fellows" in Pictures

By H. Kent Webster

LAST Christmas time in Chicago a widespread movement, originating in the minds of two clubmen, and given the hearty endorsement and publicity of the press, was the means of making happy thousands of the city's poor and needy—not through organized charitable societies, but through the individual efforts of the good fellows of Chicago. It was thus that Chicago's Christmas charity movement originated with its plea for personal charity on the part of individuals.

So successful were the "Goodfellows" in Chicago that many other large cities, backed by the newspapers, will boom the Goodfellows and their goodfellowship and make the movement nation wide.

The Essanay Film Manufacturing Company of Chicago recently produced a special feature subject, to be released a few weeks before the next holidays, showing the work of the goodfellows, told in an excellent dramatic story. The title of the photoplay is "A Goodfellow's Christmas Eve," and it shows how the Christmas spirit brought about an awakening in the heart of one self-centered man.

Grouch, so the story goes, is the member of a fashionable men's club, a very good fellow with his closest friends but very bitter in his hatred of all things sentimental. On Christmas Eve he is found in a quiet corner of the club reading a newspaper. He reads of the work of the "goodfellows" and of their plans of relief for the poor of the city. Unmoved he casts the paper aside and turns to a table near at hand for a game of solitaire. He becomes sleepy and falls asleep. He dreams that he is a child again, that it is Christmas eve and Santa Claus is about due to visit him. His mother puts him to bed after he has said his prayers—but just then he is awakened by a friend who asks him to accompany five or six of the other boys on a little charitable expedition. Grouch, though somewhat softened by the dream of a few moments before, refuses to accompany them and is left alone at the club. A little regretful of not having joined his cronies but firmly resolved not to indulge in such foolishness, he leaves the club and goes to his apartments. Here he becomes more restless than ever and decides to go for a walk.

A Change of Heart Through "Good Fellowship."

Cormorants Ready for Action. Grouch Tells of the Evening's Experiences.

The others of the clubmen have, in the meantime, visited several families and when passing by a fashionable residence they find a baby in a basket on the doorstep. Grouch comes upon them and the baby is pressed into his arms. It is a new sensation to him; something deep down in his heart stirs him and to the amazement of the others he suddenly declares he will adopt the baby.

With the little one nestling in his arms, Grouch accompanies the goodfellows to the other poor homes and at midnight returns to his apartments where the surprised housekeeper is given charge of the baby.

When the film closes we find Grouch seated in a comfortable arm-chair before the fireplace, the little one in his arms, a gentle smile reflecting from his heart that "peace which passeth all understanding."

Shortly after the film was produced a first positive of the photoplay was shown to certain members of the editorial staff of the *Chicago Tribune,* which paper in its issue of Sunday, February 26, praised it highly in a full page article. The *Tribune* remarked upon the missionary value of the film and advised manufacturers that great good would come if more of this class were exhibited. Some of the *Tribune* comment follows:

"Out of school the public wants its moral instruction and mental discipline sugar coated. Theatrical managers and moving picture producers have learned this through generations of experiment. It is far simpler to impress the audience with the beauties of right living, the joy of giving, the imperativeness of sanitation, and the menace of the fly when the pantomime on the screen is properly diluted with sentiment, humor, and romance.

"The Essanay Film Company has prepared a film on the work of the 'goodfellows' at Christmas as a semi-educational move and copies of the original film will be distributed over half the civilized world and their import absorbed by millions of men, women, and children who unsuspectingly crowd into the moving picture houses in search of amusement pure and undiluted. If the manager of the Essanay players had shown a series of photographs of the good fellows at work in Chicago with no particular regard for a connected story, nor a plot, nor the occasional introduction of a little humor or stage pathos, the sale of these films would probably have been limited to Chicago and the tired people who had come to be diverted would have groaned and wriggled nervously in their seats hoping all the while that the next film would be a good old wild west scene or one of those absurd chases over broken country.

"As the 'goodfellow' film now stands, it tells a real story, written as carefully as a play, rehearsed by trained actors, realistically staged, and, after all, just as impressive and real to an audience as the real scenes would have been and twice as diverting.

"In spite of it all, however, the goodfellow movement, a year old in Chicago, will be given an impetus in a thousand different quarters next year through the medium of moving pictures, for the film is completed and it constitutes an almost living record of the work that was carried out by the men of Chicago during the last two seasons. Grouch and his associates are merely the hinges upon which hang a story with a moral so that the public will absorb it and not discard it as vapid didactics.

"In Melbourne, Australia, and Cape Town, South Africa, the Essanay interpretation of the goodfellow movement will unroll before audiences just as much interested in Christmas and Christmas giving as they are in Chicago and every corner of the United States will be imbued with the spirit of good fellowship if Grouch and his associates have succeeded in conveying it to the film. A real Chicago baby who actually weeps and wriggles will elicit sympathy from thousands every night while the pictures are on, and old Grouch's conversion will carry the import of good fellowship to as many impressionable pleasure seekers. Immense, isn't it?"

Motion Pictures in Congress

A scene with but very few parallels in its history was offered in the hall of the House of Representatives February 13, when Colonel George W. Goethals, of the corps of engineers of the United States Army, and chairman of the Isthmian Canal Commission, addressed members of Congress and presented a vivid verbal description, supplemented by stereopticon and moving pictures of the mighty work that has been accomplished under his supervision. Not since Charles Stewart Parnell, the great Irish political leader, was extended the invitation to address the House in 1879 had such an honor been done any man, while prior to the visit of Parnell, none save Louis Kossuth and Bishop England had ever been so distinguished.

Crowded upon the floor of the chamber were, besides representatives and senators, members of the President's cabinet and justices of the Supreme Court of the United States, while absolutely unique, it is said, in the history of that great forum, were the color and show offered by scores of the wives and daughters of members of both houses of Congress. Though every available space was utilized, seats were at a premium, and hundreds, unable to obtain cards of admission, were turned away. For two hours Colonel Goethals spoke, and frequently he was applauded. The pictures, too, again and again drew applause as they showed the mighty accomplishments of the Americans who are digging the great ditch.

Educating the Scenario Writer

A chair of journalism in a recognized university or college no longer occasions surprise. Indeed, some schools are meeting with considerable success in manufacturing real writers from the raw material.

Real literary ability is a hard thing to develop, unless one naturally has it in him. So much depends on the happy turn of a phrase or use of a word. Many people of more than average intelligence have imagined the plots of countless good stories, without ever acquiring the peculiar knack of writing them.

It is here that scenario writing differs from story writing. Its success is not dependent upon a certain aptitude for building artificial structures of words. Anyone who has the ability to think out the action of a suitable story, however simple, can make it into a successful scenario, provided he has been shown how.

It is the function of the Associated Motion Picture Schools, recently established in Chiago, to show him how. Of course there are many technical points to be observed in preparing scenarios, for no profession worth while is learned without effort. But the profession of scenario writing, when properly taught, should require very little effort to learn, and is quite remunerative. And best of all, it is open to everybody, whatever their previous education or occupation.

New Amusement Patents

By David S. Hulfish

It will be the purpose of this department to list all United States patents, as they are issued, which pertain to any form of amusement business, giving such data in each case as will enable the reader to judge whether he wishes to see the complete darwings and specifications of th patent. When patents of special interest to The Nickelodeon readers are encountered, the descriptive matter herein will be amplified accordingly. A complete copy of drawings, specifications and claims of any patent listed will be furnished from this office upon receipt of ten cents.

No. 971,418. Stage Effect. Frank D. Thomas, New York, N. Y. A novel application of motion picture projection to obtain effects upon the stage in which the scene is in part produced by the motion picture projected and in part produced by actors upon the stage.

Fig. 1 of the patent is reproduced as the illustration accompanying this review, and shows the re-

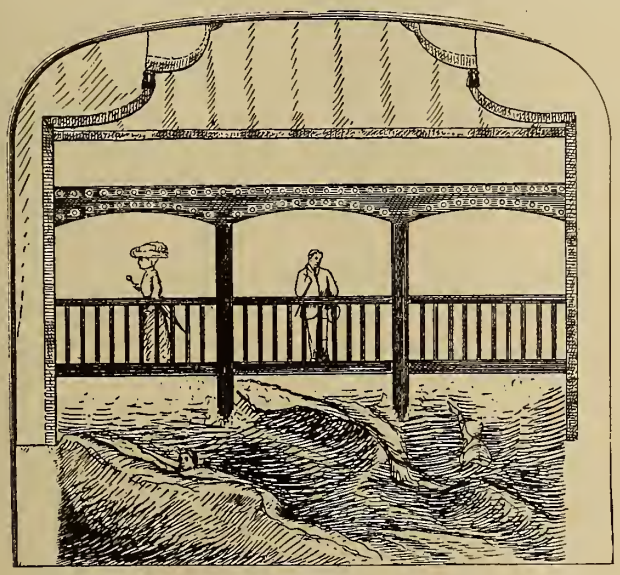

971,418.

sults which it is desired to attain. In this, the waves are strictly motion picture waves, but the two swimmers in the waves and the two figures upon the balcony or pier are actors upon the stage.

The claims cover the specific arrangement of elements very thoroughly. There are sixteen claims. A few of them will serve to describe the means by which the effects desired are attained:

1. The combination with a movable object, of means adapted to receive complementary portions of the same moving picture scene in front and back of the movable object.

2. The combination with a movable object, of means to receive complementary portions of a moving picture scene upon opposite sides of the movable object, and means to obliterate the moving picture scene where it strikes the movable object.

3. The combination with a screen adapted to receive a moving picture scene, of a screen section located in front of the first-mentioned screen, and providing a space for the introduction of a movable object.

4. The combination with a main screen adapted to receive a moving picture scene, of a screen section located in front of the plane of the main screen and adapted to receive a portion of the moving picture scene and providing space between the plane of the main screen and the screen section for the introduction of a moving object.

5. The combination with a main screen, of a screen section disposed in front of the main screen, such screens being adapted to receive complementary portions of the same moving picture scene and provide a space for the introduction of a movable object, and means to obliterate the moving picture scene cast upon the moving object.

12. The combination with a moving picture scene, of a ground row disposed in front of the scene, and composed of material opaque at the bottom and decreasing in opacity to transparency at the top.

No. 971,531. Stamp or Ticket Vending Machine. Henry D. Ebert, Baldwinsville, Mass. A device which might be adapted easily for selling tickets in the booth of a picture theater.

Primarily, it is a coin-operated vending device for tickets on strips, with discharging mechanism for delivering one ticket when a coin is deposited in the machine.

Nos. 971,588 and 971,589. Motion Picture Machine. George W. Bingham, Brooklyn, N. Y., as-

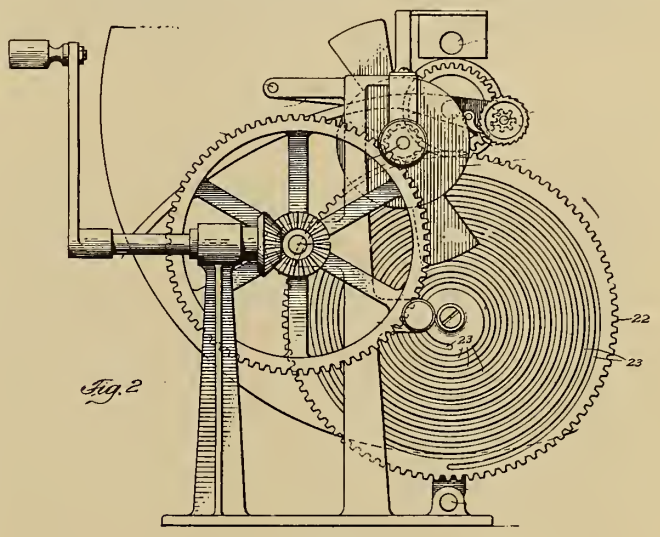

971,588.

signor to Bingham-Cameron Company, of same place.

The devices of these two patents do not deal with the strip film, but with a motion picture film in which the images are taken in a line upon a disk of transparent celluloid.

Fig. 5 of the patent, reproduced as an accompanying illustration, shows the disk of sheet celluloid, corresponding to the strip of film of the professional motion picture machine, and upon it are arranged small circles representing about six hundred small picture images, the equivalent of thirty-seven feet of ordinary motion picture strip film. This furnishes as a toy a picture capable of running for three-quarters of a minute upon the picture screen. A suitable toy size would seem to be a ten-inch disk with picture images three-eighths of an inch in diameter. This disk would be the well known talking disk size, and the picture would compare with the size of the picture of the Biokam or Ikonograph, which use a picture three-eighths high and one-half an inch wide.

The line of images is a spiral from the center to the outer edge. Two movements of the disk of celluloid are necessary to bring the successive images behind the lens; first, the disk must revolve, step by step, and second, the lens must move outward from the cen-

ter of the disk, or the disk must move away from the lens to effect the same result.

To illustrate the mechanism for controlling the disk of pictures, Fig. 2 of the patent is reproduced. The large gear 22, having the spiral groove 23, is the mechanism for causing the spiral of pictures to keep in

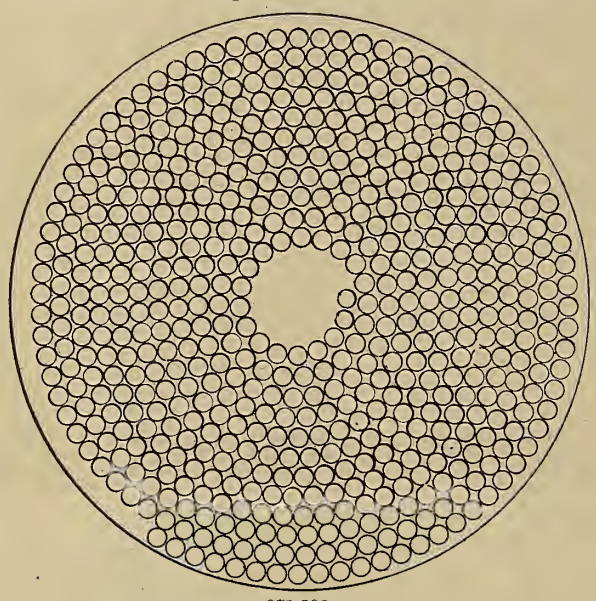

971,588.

alignment with the lens, either the projecting lens when viewing the pictures, or the camera lens in the making of the negative.

The illustrations are taken from the earlier of the two patents. In the later patent, a simplified device is employed as a substitute for the spiral grooved gear.

No. 971,864. Moving Picture Projecting Lantern. William N. Selig, Chicago, Illinois, assignor to Selig Polyscope Company, of same place.

For accessibility of the projecting arc, Mr. Selig has passed all previous efforts at a single jump.

The illustration almost tells the whole story, the story is so simple and the picture is so complete. The solid lines of the picture show the arc lamp in its position for projection, within the lamp house.

Does the operator desire to trim the carbons of the lamp? Just catch the back of the house and pull out the back and the whole lamp comes away with it, free from the top and both sides and almost free from the bottom, too. When the arc is trimmed, the whole lamp is pushed back into the lamp house, the back wall of the house comes into position without special care, and the lamp is ready for projection again.

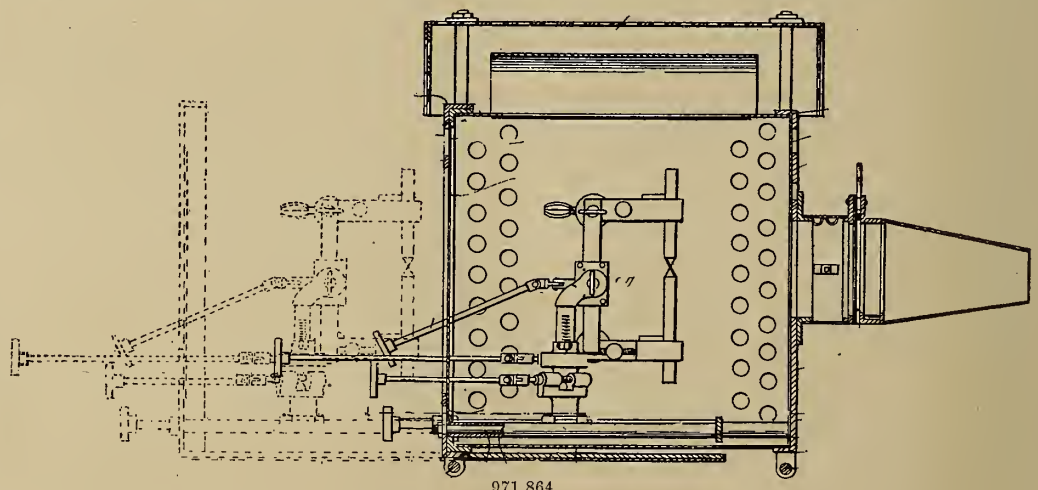

971,864.

Labor Law a Bar to Child Singers

Judge Gregory, in the Louisville (Ky.) Criminal Court, recently overruled the motion of the Story-avenue Picture Theater for a new trial in a case wherein a fine of $25 had been imposed for the employment of a young girl as a singer. In passing judgment Judge Gregory defines the meaning of the term "labor" as used in the statute under which the action was filed.

The opinion of the court is in part as follows:

"It is entirely evident that a child employed to sing for the amusement of an audience, as was the one in the case at bar, is not a laborer, and does not labor in the most restricted sense of that term. In all such matters a correct interpretation of the law involves the inquiry into its purpose. When the statute emphatically disclosed the purpose to prohibit children under sixteen years of age engaging in any gainful employment after the hour of seven in the evening, there can be no doubt that the purpose of the legislature was as much to protect such children from the evil influences and tendencies besetting night employment in a theater or music hall as in a factory.

"Nor can it be questioned that a child under sixteen years of age singing for compensation is engaging in a gainful employment as clearly as one who labors in any line of employment with hands or mind or both. It cannot be fairly contended that this line of employment is foreign to the purpose or title of the child labor statute. The word 'labor' is defined as being 'work requiring exertion or effort, either physical or mental; toil.' Judicially defined: 'Labor is defined to be physical toil or bodily exertion; also to be hard muscular effort directed to some useful end, as agriculture, manufacturers and the like; also to the intellectual exertion and mental effort.'"

Pictures Win Recruits

The stereopticon lectures in moving picture houses in Los Angeles descriptive of the cruise of the battleship fleet around the world, given by P. A. Merriam, chief electrician, U. S. N., have proved to be of such value to the local recruiting station, to which he is attached, that Merriam has been granted an additional shore leave of two months to continue the work. A number of recruits have been attracted.

He began his lecture course with the fleet at Hampton Roads, where the memorable cruise under Admiral Evans began. He has followed it in detail, describing the movements of the big men-of-war, telling of the target practice, the life of the sailors, and the ports at which the vessels stopped. Merriam has visited all the places shown in the pictures, and gives a highly entertaining account of them.

Another Uplift Motion Picture

Edison's "The Wedding Bell"

A Victim of the Sweatshop.

The Wedding Bell.

THE Edison Company will soon release another film of the uplift class. It is to be entitled "The Wedding Bell" and shows the danger that lurks in goods made under the sweat-shop system. The sweat-shop is one of the big problems of modern economic life, yet owing to its peculiar nature is one that never comes under the eyes of the well-to-do. Its victims are the abject poor and its lurking place the crowded tenement house. In this connection the film also points out the evils of absentee landlordism.

The glimpse of real conditions which this Edison film gives may shock many good people and it is to be hoped that it will. Thought will result, and possibly action. The dramatic form in which these social and economic facts are cast renders them particularly effective. We will let the story give further details.

Clara, the benevolent daughter of John Grey, a wealthy business man, in making her accustomed calls on the poor in the lower East Side of New York, finds the Fenilosi family consisting of mother, Mona aged nineteen, Rosa aged seven and Toni aged eight, living in utmost poverty in one room, amid shockingly unsanitary conditions. The mother is ill and unable to work and in order to earn bread for the family Mona is making artificial flowers, assisted by the other two children. Clara, desirous of helping them, gives Mona an order for several hundred flowers, which she explains she desires to use in making a large bell for her wedding which is to take place in a short time. Mona calls upon the agent of the tenement and complains of the unsanitary conditions but the agent cannot act in the matter of improvements without the owner's sanction. The owner enters the office at this moment and the agent refers Mona to him. He listens to her story, but absolutely refuses to make the necessary repairs. Mona goes home much discouraged. When she arrives home she receives a note from Clara Grey asking her to deliver the balance of the flowers as soon as possible. Being thus urged to hurry, the whole family go to work on the flowers, even the mother who gets up from her sick bed. Giuseppi, Mona's sweetheart, calls; he is also put to work. The agent rudely interrupts them by demanding the rent. Mona cannot pay all. Her sweetheart contributes all he has but it

The Guilty Owner.

Clara's Philanthropy.

is not sufficient. However, Mona assures the agent that she will bring him the balance as soon as she has delivered the flowers and he leaves apparently satisfied. Clara, her fiancé, Samuel Rice, and their friends Dr. Watts and Marian Linsey are busily engaged decorating the wedding bell. During the process Clara has several slight fainting spells, but, as they pass away almost immediately, no importance is attached to them. Mona arrives with the balance of the flowers and Clara and her friends gaily complete their task.

Clara and Rice are married the next evening, but no sooner has the minister pronounced them man and wife than Clara falls fainting into her husband's arms. She is at once put to bed and Dr. Watts diagnoses the illness as typhoid fever. Mr. Rice in trying to arrive at the cause of the illness, recalls Clara's fainting spells while decorating the bell. They decide to examine the flowers on the bell. Dr. Watts puts them under the microscope and finds them infected with typhoid germs. They decide to trace the flowers to their source. Their search leads them to the tenement of the Fenilosis where they find Mona in an atmosphere of disease and pestilence, making flowers. Dr. Watts finds the mother's illness a violent case of typhoid and, obtaining the agent's address from Mona, they hurry to his office to learn the name of the owner of the tenement in order to have him broght before the Health Commissioner and severely punished.

Upon stating their errand to the agent, they are horrified to learn that the owner of the tenement is none other than Clara's father, John Grey. Rice then discloses to Mr. Grey the fact that the illness which is endangering the life of his only child was contracted in one of his own filthy tenements, for whose proper sanitation he had refused to spend any money. Rice then persuades Mr. Grey to visit the tenement. The latter when brought face to face with the terrible conditions, is seized with a spirit of remorse and starts about to remedy his past neglect. He gives orders to have the tenement renovated and remodeled, has the mother taken to the hospital where she will receive proper treatment and nourishment, gives Giuseppi a position as his chauffeur and does all in his power to atone for the past. Clara is spared to him and, upon her recovery he takes her to the remodeled tenement where we find the Fenilosi family living happily under the greatly improved conditions.

This novel production gives a highly realistic presentation of the shocking conditons that are countenanced by a civilized community and is a worthy successor to "The Man Who Learned" and "The Red Cross Seal."

Foolish Moral Prejudice Against Motion Pictures

"When Jesus desired to set forth the essential meaning of Christianity in a universal langauge that should speak to men of every age and all races, he chose a dramatic story. He told the parable of the Good Samaritan, and therein gave an example of ideal preaching which many preachers of the present day, alas! seem to have completely overlooked.

"Note some of the details of that sermon-story. It was not taken from the Bible—the Old Testament used as a Bible by Jesus' auditors—but from contemporary experience. It was the sort of thing that might have happened any day and to any one in his audience. Secondly, it was an exciting story. Robber-tales always thrill the emotions, and much more in the ancient world perhaps than today, because then the risk and the likelihood of such deeds of violence were immeasurably greater than now. Thirdly, this narrative-sermon frankly introduces morally negative elements and leaves them negative to the end of the chapter. Was it not dangerous to the church establishment of that day to have its priest and Levite pictured as failing so utterly in the grace of compassion, held up to ridicule as hypocrites and poseurs? And as for the robbers themselves, not only did the story give a most realistic description of precisely how they perpetrated the cowardly crime of violence, but it leaves them victorious in their wickedness, scurrying off with their booty, unrepentant of their sins, probably chuckling at the folly of the traveler for venturing upon the notorious Jerusalem-Jericho road without a caravan to protect him from the highwaymen. And yet, despite these three dubious characteristics of not being scriptural to the people who heard it, of being exciting, and of having realistic and morally negative features in it, who dare assert that the story of the Good Samaritan has wrought harm in the world? Rather, has it not earned for itself recognition as being the central parable of all the Master's teachings? Has it not exhibited in complete and convincing fashion the very heart of the gospel? Has it not urged more men into lives of ministry and helpfulness than any piece of literature of equal length ever known?

"We have delayed thus on the story of the Good Samaritan in order to disarm if possible that mood of antagonism with which some of you approach the general subject of motion pictures. You 'know that they are bad,' because they are exhibited in a theater that charges only five or ten cents admission. You have never seen many of them, perhaps not any of them; but from various sources, you hardly remember whence, the suspicion has been bred in your mind that the motion picture is evil and evil altogether. To assert therefore that there are any 'religious possibilities' in the motion picture strikes you as the acme of absurdity. It is as though one were to announce a sermon on 'The Spiritual Value of the Clog Dance.' You have heard that motion picture stories are likely to represent crime, that they are exciting, and that scarcely a phase of modern experience has been overlooked by the manufacturer.

"And now we come to the point: the objections which you and others thus make against the religious use of motion pictures can all of them be urged with equal force against the use of the most convincing parable which the Christ ever uttered. The films that have value for religious education today are those which portray truth as the Good Samaritan portrays it—in a dramatic story, of contemporary experience, exciting in character and thus interesting even to the morally sluggish, picturing negative elements such as crime, accident, ignorance, sin, and thus commending itself as true to life, but in the end showing the defeat and expulsion of these negative elements by positive qualities, virtuous souls, God-like traits. The only thing needed to make the parable of the Good Samaritan a conspicuously successful motion picture film is a new title. Call it 'The Adventure of the Jerusalem Merchant,' and it would appeal perfectly to the habitue of the dime theater, and he would catch the noble moral of it far more swiftly, perhaps, than do many of the more well-to-do Christians, who hear it rather than see it, when it is droned forth from the pulpit by the preacher of a Sunday morning as the New Testament lesson."—Rev. Herberta Jump.

A Strong Independent Feature Film

Nestors's "In the Commissioned Ranks"

"A STORY deliciously old and refreshingly new, splendidly told by efficient actors," is the way the announcement of Nestor's "In the Commissioned Ranks" reads. This is not far from the truth. It is a truly dramatic incident, carried to a logical end with impressive effect.

Not being startling in subject, one naturally asks, why all this "hurrah-boys?" to which the only answer is, "See for yourself." In these days when any old reel is heralded as a feature, it is hard to convince the trade that any film is a really good one, let alone one that the makers admit is a fairly old plot, dressed up in new clothes, but such is the case here. In truth, what good story is not old?

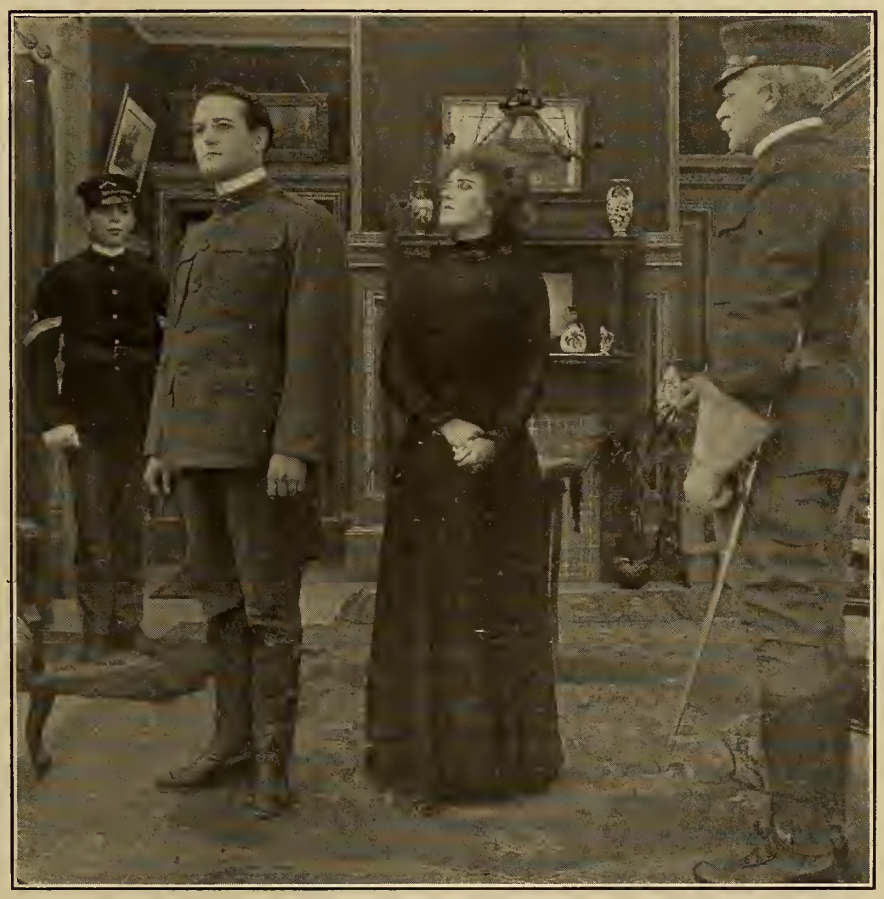

At the Parting of the Ways.

In selecting this subject for one of the first releases from the Baltimore studio, the Nestor people deliberately set about to show the film world how well the simple story of a reconciliation betwen husband and wife could be produced if the proper attention and spirit were manifest.

The most prominent feature of "In the Commissioned Ranks" is the complete grasp which all the actors have of their parts. Here is a film in which the stars do not shine to the exclusion of others, rather one senses the fact that the principals are helping the others to properly interpret the plot.

Most military dramas are full of technical mistakes. In fact, there is hardly a style of drama that offers so many difficulties in the matter of detail of action, and oftentimes a producer finds it necessary absolutely to violate military custom in order to get dramatic effect. Here the producer has avoided many of these pitfalls, and the reel is surprisingly free from mistakes of detail. The drama is concerned with life at an army post. The captain's wife departs for a ball with the colonel, leaving her child at home sick. While the mother is gone, the child dies. The father upbraids the mother for her neglect, but she defends herself as the wrong was unintentional. Their recriminations bring them to a parting of the ways, and the quarrel waxes even hotter when they try to decide who shall have possession of the dead child's effects, her clothes, playthings, etc. The colonel interposes and decides that the warring parents shall divide the things equally. While going over the dead child's effects with this end in view they are suffused with tender memories of the past, which engenders feelings of mutual sympathy, and leads to a final reconciliation.

The plot is not so old that it will not stir many a fresh throb of pathos and sympathy. The last scene is very strong, and particularly effective owing to its perfect intelligibility.

Pictures Stimulate the Mind

Professor G. P. Baker, who holds the seat of dramatic literature at Harvard University, at a recent lecture before the Harvard Club of Cincinnati on "The Signs of the Times in the Drama," declared that moving pictures are taking the place of melodramas. He believes they stimulate the imagination and are good for the brain. One is compelled to use his mind in filling out the story. He also mentions the fact that there is less tendency toward immorality and crime in the picture show than in the melodrama.

New Kansas City Ordinance

The regulation of the operation of motion picture shows and 5-cent theaters for the protection of life and property against explosions, fires and panics is provided in an ordinance passed by the Kansas City Council recently. No person under 18 years old is permitted to operate the machine, which must be inclosed in a metal booth. There are many specifications relating to construction. Another ordinance is pending to censor the pictures.

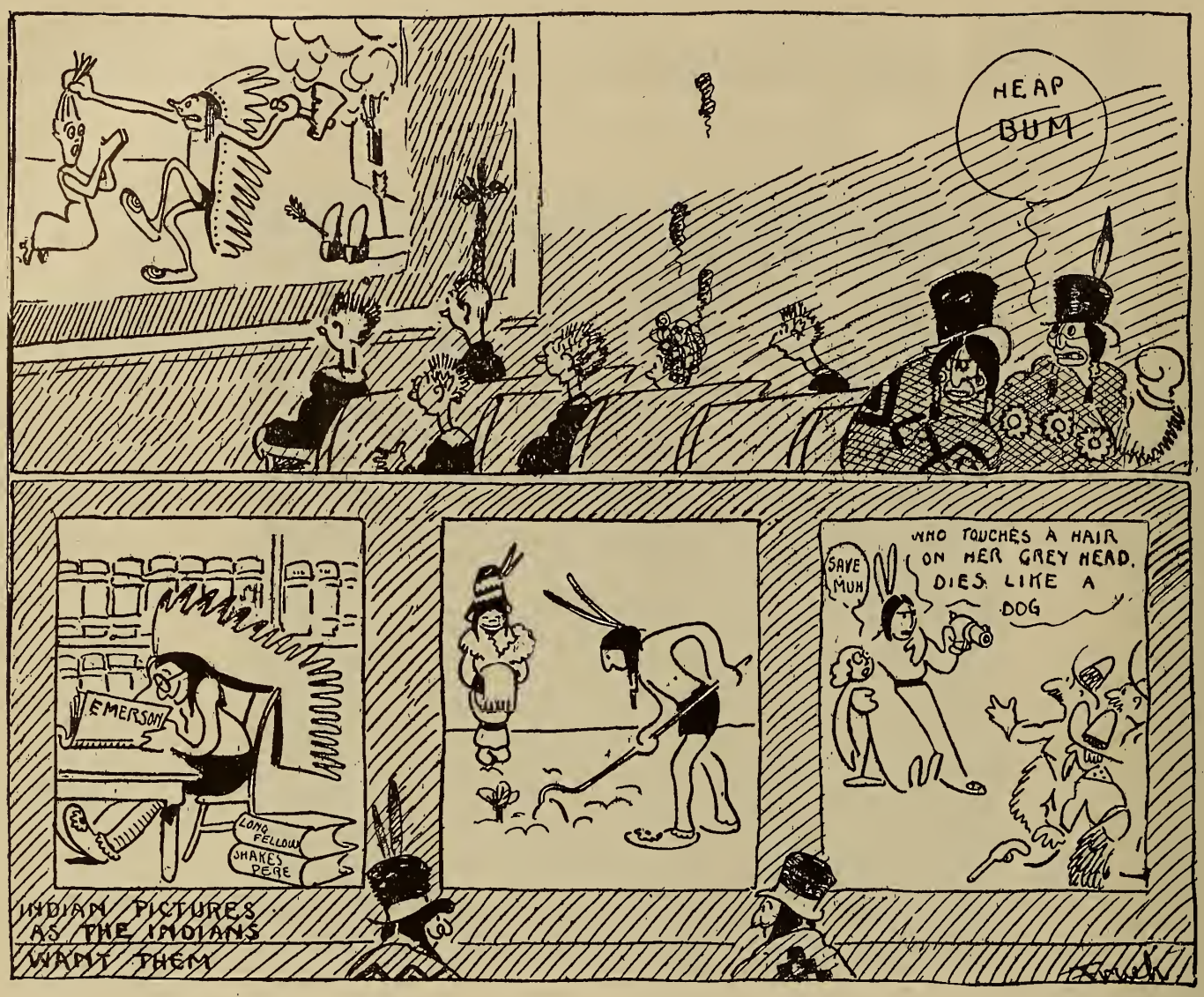

Those Indignant Indians

A story has been going the round of the press that two Indian chiefs on a visit to Washington entered a motion picture show and were angered to see how untruthfully and even libellously the Indian was portrayed on the screen. The story has inspired many a newspaper to humorous comment. The above cartoon and the following squib show how it struck the funny bone of the *New York World*.

"What's the use of an Indian trying to be good?" asked Big Buck mournfully.

"Wait until I get back to my dear little cottage on the reservation," growled Big Bear angrily. "I'll have my brother, just graduated from the Oklahoma Law School, sue these people for misrepresentation, slander and libel."

"The Moonlight Massacre, or the Crazy Chief's Revenge," or something like it, was the attraction of the moment; "taken at the risk of his life on the spot by our daring representative," the show's barker announced.

In ten minutes the Crazy Chief and his band killed and scalped eight frontier farmers; gave a trembling old man his choice between a cold chop and a hot stake, tortured eleven women, stole thirteen children, set the torch to two barns and four log houses, held up a coach and murdered three miners who, incautiously, had fallen asleep on heaps of their hard-earned gold. The agreeable and instructive entertainment concluded with a "sanguinary holocaust," the barker said. So it did.

The scalping that went on in the picture was not a marker to the hair raising effect on the audience. A sensitive old lady went into hysterics, a small boy had spasms and a little girl has not been able to sleep since.

"Why, it's brutal—ugh!" shuddered Big Buck as he left the show.

"Positively shocking," echoed Big Bear. "But I'll have the law on them. They shall not libel a peaceful, industrial, sober race."

It is reported more or less credibly that Big Buck quotes Emerson and Shakespeare to relieve the tedium of his plowing; that Mrs. Big Buck is deeply interested in woman suffrage; that Little Buck is studying aviation, and Gliding Fawn, his sister, is preparing to enter Barnard College. Big Bear is president of the Society for the Suppression of Unnecessary Cruelty; his wife has started a branch of the W. C. T. U. on the Arapahoe reservation; Yellow Cub, their oldest son, is a chauffeur in Guthrie, Okla., and All Bear, their daughter, is giving the Salome dance in a Denver music hall. And all the other Arapahoes and Cheyennes are equally advanced, pious and peaceful

Some Questions Answered

By William T. Braun

In this department, answers will be given to questions upon any subject in connection with the conduct of moving picture exhibitions, the operation or construction of moving picture machines, the making of pictures or films, or any questions pertaining to the amusement business which can be answered without specific reference to any person or company. Questions are invited, and will be answered as promptly and as fully as possible.

SPOTS AND BLURS.

Please answer in your department in The Nickelodeon some machine defects. I have a one pin Edison exhibition machine, old model "hawk bill" shutter, shutter shaft loose in box. I am using alternating current, 110 volts, 60 amperes, screen 12x15 feet, 60 foot throw, 6½ and 7½ condensers. It is impossible to clear the picture on screen. Take the yellow out of the corners and it is a little blue in the center; take the blue out of center and it is yellow in the corners. The light does not make a clear cut picture around the edges.

From the lamp house, facing the screen, the right half of the picture is blurred, especially on heavy films, showing white objects. A mirror shown in the picture will blur or be fuzzy for two or three inches around it; a lady's white dress will be the same way or a face will be so blurred that you can not see the features. White letters will have white streaks above them. Should top carbon be set back of bottom carbon with alternating current, the same as for direct?—A. H. P.

FROM your letter I should say that there are a number of things wrong with your outfit. In regard to the spot, when the spot has yellow corners the light is too far away from the condenser lens. You remark that when the yellow corners disappear you have a blue spot or ghost in the center. This ghost almost always comes from incorrect setting of the carbons.

The general tendency at the present time is to set the carbons in a straight line, either for alternating or direct current. During my experience as operator I found that I could always get a better light, when using alternating current, by setting the lower carbon perpendicular or vertical and the upper one at an angle of about 30 degrees from the perpendicular. In setting new carbons I have found it best to center the points; that is, the upper and lower carbons should be in line with each other sideways, and the points touching. I would not set the lower carbon ahead of the upper in alternating current. If you have an old-style Edison lamp I do not think it possible to set the carbons at an angle with each other. With this lamp the carbons must be set in a straight line, and you might possibly set the lower carbon just a trifle ahead of the upper, but not very much. The main idea is to get craters as perfect as possible and have them face the condenser lens. You might also get another 7½-inch condenser lens. Put both 7½ lenses in; this might help the spot somewhat.

The blurring of the picture, if your projection lenses are O. K., comes from the film not lying flat against the aperture plate while being projected. I would advise you to test the film tracks with a steel rule or level to see if they are cupped or worn. If they are, they should be filed straight. The tension springs will then bear on the film evenly all over and you should get a sharp, clear picture. You cannot adjust the tension springs on an old Edison machine.

The white objects and streaks above the letters mentioned are caused by the shutter not working at the proper time. You mention a "hawk bill" shutter. The only revolving shutters that the Edison Company ever equips its machines with are the two-blade shutter and the outside three-blade revolving shutter. I think you most likely mean the regular two-blade style. This shutter can be loosened on the shaft by unscrewing the screws in the box. Set it as per directions given in the issue of February 11, 1911.

If you will look to the directions given above you should be helped considerably. Let me know what success you have and I might be able to offer further suggestions, as you have so many troubles it is hard to cure them all at once.

UNSTEADY PICTURE.

I am using a new projecting machine, but am having very much trouble with the picture jumping up and down on the screen. Our throw is 80 feet and we have a picture about 11 by 15 feet. The picture is good and sharp, the light is plenty strong enough, but the picture is not steady on the screen.—P. T. W.

THERE are quite a few reasons for the picture not being steady on the screen, and the best way to find what is really the trouble, is to watch the machine very closely until you find out what causes the jumping and then try to fix it up. However, in order that we may look in the right place, I will go over some of the most common things which cause the film to jump and if possible give the remedy. You can then watch the different parts and see if they cause the trouble, in that way locating the base of your trouble quicker.

In the first place, is your mcahine firmly secured to the floor and absolutely rigid? If not, the vibration due to the speed of the crank is liable to make the picture jump on the screen. You must remember that you have a long throw and any little motion of the machine will be magnified about two hundred times on the screen. So you can easily see what a small swaying of the machine may produce. The best way is to secure the machine firmly to floor. Three or four methods describing this were given with some detail in last week's issue of The Nickelodeon, in answer to S. J. S.

Now we will assume that your machine is on a rock foundation and will turn our attention to the film. Once in a while we get a film whose sprocket holes are not perforated correctly; that is, they do not line up with the pictures. The only way to see if this is the trouble is by measuring. This is a great deal of trouble and would hardly pay, as you surely can not run across many of this kind of films. When film becomes old and dry the sprocket holes shrink and also become worn. If you are getting this kind of film service, you cannot expect a steady picture. The only thing that can be said here is to change film houses.

The next thing is to see that the tension springs on the film gate exercise sufficient tension, so that the film remains perfectly still on the intermitten sprocket after being pulled down by it, and does not slide back and forth on the sprocket when being projected. Of course you will have to exercise common sense and not screw up the springs so that the film will be unable to move at all. If you clean the springs and film track of the aperture plate, and then rub on a little wax,

warming the gate at the same time, then polishing it with a soft rag so that the film slides through easily, you can stand quite an amount of tension on the springs.

This leads us to the intermittent sprocket itself. If the teeth of the sprocket are badly worn, or the sprocket covered with rust or dry emulsion, the film is very likely to jump and is certain to jump off of the sprocket entirely once in a while. If your machine is of the finger feed type, the film gradually wears the fingers down, although this takes some time and this condition would not be likely to happen on a new machine. The fingers or pins will have to be removed in order to see if they are worn, as they must be examined at close range. Of course, all you can do here is to get a new sprocket or film fingers, as the case may be.

Now examine the Geneva star and pin wheels. Turn the machine slowly until the pin is out of the star wheel and the star wheel is at rest. With your fingers try to move the intermitten sprocket to see if there is any looseness between the star and pin wheels. All four positions of the star wheel should be tested as above. A very small shaking of the sprocket will cause the film to be shaken when the sprocket is in motion, thereby making the picture jump on the screen. If the sprocket is loose for all four positions of the starwheel, the shafts upon which they revolve are too far apart. If the shaking of the sprocket is only in one or two positions of the star wheel the shafts do not run true. For the first get a new star wheel and see that it fits snugly to the shoulder of the pinwheel in all four positions. If the shaft does not run true you will have to get it fixed by an expert machinist. If they continue to run in this way the star and pin wheels will be worn to a level and soon out of adjustment altogether.

The rollers which guide the film on the sprockets should also be adjusted carefully. On every machine these rollers are equipped with a set screw and lock nut so that they are held away from the sprocket at the proper distance.

If you attend carefully to all of these things I am sure you will get a steady picture, and I would be pleased to have further reports from you.

SHUTTER OUT OF ADJUSTMENT.

We are using an improved Exhibition model Edison machine. It has given good service, but lately white shadows flit up and down near the bottom and also on the left side of the picture. Can you tell me what causes this and what can be done for it?—W. E. N.

THE white shadows are caused in any machine by the shutter not synchronizing with the movements of the star wheel. Turn the crank clowly and watch the action of the shutter, star and pin wheels. When the solid blade of the shutter entirely closes the aperture note the position of the pin in the star wheel. At this time the pin should be about half way out of the slot.

To set the shutter, loosen the two screws on the hub or round casting to which the shutter wings are attached. The shutter will now revolve freely on the shaft. Put the frame up lever in the middle of its position or perpendicular to the machine. Turn the flywheel around slowly until the pin on the pin wheel is just about half way out of the slot. Now turn the shutter around until the solid blade covers the aperture entirely. Tighten the screws and try out your machine. You ought not to be troubled any more with white streaks or travel ghosts at the bottom of your picture.

It is not a bad idea to make a mark on the spindle close to the hub of the shutter and also a scratch on the hub directly opposite the other mark. Now, any time that the shuter should accidentally slip out of its correct position it can be easily and quickly replaced.

It will not hurt to try to improve the picture by setting the shutter a little earlier or later. But after you have made the best adjustment, some kind of a permanent mark like the above should be made so that it can be reset quickly.

PICTURE OUT OF FRAME.

I am using a Viascope machine and am having trouble with the frame-up device. The picture raises on the screen continually, and keeps me busy framing up all of the time. I think something must be wrong with the frame up, but do not know how to fix it.—M. R. K.

YOUR trouble is very easily remedied. If your picture steadily rises on the curtain, the machine is sinking. This is caused by the guides not gripping the guide rods of the machine tight enough.

On the lower guide at the right hand side as you face the machine from the lamp-house, otherwise known as the operating side, you will see a small screw. This screw should be tightened and the guides will grip the rod and prevent the machine from falling on the rods by the vibration. Of course you understand that if the screw is tightened too much you cannot work the frame up lever. It would be a good idea to get new springs on the rods as the old ones are probably worn out.

Joliet Orpheum Has Bright Light System

On the occasion of the opening of the new Orpheum theater at Joliet, Ill., pictures were shown on the picture screen while the house lights were turned on full force. The invention was given to the world about two months ago. Several vaudeville houses in large cities in the east tried out the invention with most satisfactory results.

The first test to be made in the west was at the Plaza theater, Chicago. So gratifying were the results that Mr. Bray had the machines installed in the Chicago Majestic and will place them in all of his other theaters.

The new system of moving pictures is the invention of R. A. Herbst. Mr. Herbst worked on the process for more than three years before he had it sufficiently perfected to present to the public. Those who have seen the pictures shown under the Bright-Light system, as the Herbst patent is known, declare that they are much clearer than those shown in a darkened room, and that when colored slides are used the effect is truly amazing.

One of the best features of the system, all who have seen it demonstrated agree, is the absence of eyestrain. The Herbst system eradicates the flicker, and the brilliant illumination in the body of the theater tends to bring out the views clearer than in a darkened room, as well as doing away with the objection many persons had to the dimming of the lights while the machine was being operated.

Comedy in the School House

"Oh You Teacher," by Essanay

What promises to be a ten-strike in farce comedy is an Essanay Eastern production to be released in the near future under the title of "Oh, You Teacher!" The title of the photoplay alone suggests possibilities of genuine fun and the excellent Essanay Eastern players have not missed the opportunity to get the best out of a very humorous plot.

Comedy in the School-Room.

The story relates in homely fashion the trials and tribulations of the Pumpkinville school board in retaining their pretty lady teachers. They are aroused to action when the last young lady makes a quick *getaway* with one of the village swains, not even having given them a moment's warning. The three members of the board, with Mrs. Jenkins as president, resolve to adopt a new plan in selecting the next instructress of young Pumpkinville. An advertisement is inserted in all the county papers and the next day at the appointed hour the applicants for the position make their appearance. Never in the history of Pumpkinville had such a homely aggregation of femininity been seen in its streets. After the applicants had been sent into an adjoining room, Mrs. Jenkins, the dominating spirit of the board, divulges her plan.

"Now, gentlemen," she says, "we shall proceed to select the homeliest one, and we will thus have the assurance of her not running off with these young town scallawags."

"Well, it appears to me," interrupts Deacon Jones, "that we are going to have a pretty hard task of selecting the homeliest one. As for me I rather like the looks of that young lady with that big hat. She looks more intelligent than all the others—even if she is pretty. Aren't those your sentiments, Brother Snow?"

Henry Snow, the junior member of the board, a young man of twenty-four, hastily agrees, and when the selection is made, pretty Miss Brown is given the job, despite the protestations and ominous warnings of Mrs. Jenkins.

It has been noted that Henry is greatly impressed by the girl's good looks, and the friendship which was theirs from the first ripens into love. Miss Brown has

Oh, You Teachers!

Eva Learns a Lesson.

finally won the respect and friendship of Mrs. Jenkins, with whom she has gone to board, though the old lady's observant eye has not overlooked the affair between Miss Brown and the young school director.

But the two young lovers have not reckoned with Eva Jenkins, a little girl of fifteen, foolishly and madly in love with handsome Henry. She plans to wreck the happiness of her rival, and a short, spiteful note, signed merely "A friend," is sent by her to the pretty teacher. Its contents informs Miss Brown that she was selected by Henry Snow becase she was the homeliest applicant for the position as teacher. The note has its desired effect and disaster threatens love's young dream, until Willie, Eva's brother, confides to Henry that it was Eva who wrote the note.

The unhappy circumstance has brought the young teacher and her beau more closely together and they resolve to go to the city immediately and be married. They have barely left the house when Mrs. Jenkins discovers the note left by Miss Brown and young Snow informing her of their intentions. Eva is justly humiliated, but has learned a valuable lesson, which she is not likely ever to forget.

How Song Slide Actors Are Obtained

The concern that makes song slides, the pictures used with illustrated songs, has on its books the names of various persons, old and young, men, women and children, who can be called upon as they may be needed to pose for pictures, and among these it can find usually subjects suited to any requirement, but occasionally there comes in for illustration a song requiring for its pictures somebody still different, and then the subject needed is advertised for.

In such a case lately for the twelve or fourteen slides to be made to illustrate the song there were required four subjects, including a gray-haired couple, a man and a woman, each from 55 to 60 years old, and two children. The song slide people had on their lists a woman who was suitable, and they had the children, but they did not happen to have a gray-haired man who proved exactly to fill the bill. The man must be not only of the required age and gray-haired, but he must also have a bearing, expression and manner that would be suited to the sentimental requirements of the song, and so they advertised for a man like this:

"Wanted—Man to pose for illustrated songs; must be gray and 50 or 60 years old."

In response to this advertisement there were about twenty applicants, all of the required age and all gray-haired, at least half of them well dressed. With the exception of the one finally chosen they were probably all men out of employment. Among them there were others who were not at all available, some who were approximately suitable. It was the twelfth man that applied who was taken, and he proved to be an artist's model.

He had brought his wife with him, and now it was observed that she would be a very suitable figure for the woman needed in the picture, and so she also was employed, and thus the two will appear, and very appropriately, on the slides picturing the gray-haired couple.

For the half dozen slides required picturing them they will be posed with suitable background in the picture concern's studio; the two children who will appear on the other slides, who live not far away out of the city, will be posed and pictured in their home. In due time the slides thus made will be ready to throw on the screen, one after another, as the singer sings the pictures illustrating the song.

Operator's Union Ousted

The Moving Picture Machine Operators' Union was ousted February 24 from the Chicago Federation of Labor.

Three principal charges were brought against the officials of the union and all were sustained by the executive board of the central body, which took the action.

One of the charges, a unique one, was that the officials allowed the union to incorporate under the state laws, in violation of "trades union principles." The others were that payment of per capita tax to the international union was refused, and that assessments were levied against the members without giving an accounting.

The ousted organization has a membership of 400 and its affairs are conducted by a board of directors, of which William F. Menzel is chairman. Lee M. Hart, secretary of the Theatrical Stage Employes' International alliance, with which the ousted union originally was affiliated, declared his life had been threatened by sluggers because he revoked the union's charter.

An operater who refused to join the ousted union was slugged Wednesday evening at Clark and Van Buren streets. Secretary Hart declared that a system of organized slugging is being carried on by an "inner circle" wrecking crew, whose emblem is a small button bearing a skull and crossbones.

Minnesota Exhibitor Asserts His Rights

W. A. Ryan, of Deer River, Minn., has applied for a temporary injunction against members of the village council of Deer River. Ryan operates a moving picture show and seeks to restrain the village council from interfering with his business.

At various times there have been four ordinances passed by the Deer River village council attempting to license moving picture shows, together with various other public entertainments, peddlers, etc. There have been at least two prosecutions brought against Ryan charging him with operating his business without taking out a license, but in each instance the prosecution has been unsuccessful.

The last ordinance provides a license fee of $200, and Ryan resisted payment of this license fee on the ground that it was unreasonable and that the ordinance as enacted was for the purposes of revenue only, and was not a police measure. The matter has now gotten into the district court in the form of an action to obtain an injunction from any attempt to enforce the ordinance in question.

The question over the validity of this ordinance is of general interest to villages all through the northwest part of the state where conditions are the same as in Deer River.

Crusader After Sunday Shows

Rev. Hugh Leith, pastor of the Presbyterian church at Lancaster, Ohio, filed an affidavit in the mayor's court against proprietors of three moving picture shows in that city for performing manual labor on Sunday. The case was continued.

Recent Films Reviewed

The Buccaneers.—Selig. A stirring pirate drama very well presented. The real ship and the excellent costumes and make-up provide elements of verisimilitude that help to carry conviction. The action is vehement and physical, but that is what one expects in a pirate drama.

The Demon.—Ambrosio. This is evidently an allegory of some kind, but the meanings are pretty much obscured. There is plenty of action, but it, too, lacks meaning, and above all, dramatic interest. It is all vague and indefinite, with the human element subordinated to supernatural forces that have no personality beyond goodness and badness. Angels and devils must be given flesh and blood before they become of dramatic interest. The production is very good and to some extent educational in that it depicts the life of a little known region of Europe.

The Diamond Star.—Biograph. Somehow while watching this film one had the impression of witnessing a performance on the legitimate stage. The polished acting, the subdued elegance of the stage picture, the pulchritude of the actors, the refined story, and deft well-developed action, are all such as one might see on the boards of our best theaters. The story is not in any way momentous, but it is pleasing and presented in faultless style. Every suggestion of mediocrity has been eliminated. It gives one the delightful thrill of a thing well done. One feels as if one would like to take some skeptical friend of intelligence and taste to witness this film and demonstrate to him that the motion picture can rise to high levels. With more photoplays of this quality some enterprising manager could establish a theater with admission prices of 25 and 50 cents, and make a go of it.

A Buffalo Hunt.—Pathé. Interesting scenes nicely colored. It's queer how little excitement hunting scenes arouse when one is not a participant. Then the wanton butchery of it becomes apparent. Especially is it non-exciting when the poor beast lacks every chance of defense or retaliation. These spruce and dainty hunters were surrounded by a cohort of native servants who did everything but aim the gun and pull the trigger.

A Soldier.—Pathé. An affecting drama compounded of highly contrastive emotional elements. The mixture of autocracy and compassion in the gruff old general is peculiar and profoundly human. The pantomime at the end where he will listen to no expressions of gratitude and scolds away at the subordinate officer in order to hide his feelings, is expressive and touching. The acting is all good, especially that of the general and his subordinate who have the military bearing to perfection. Their clothes, their figures, every movement, is expressive of militarism and discipline. How is it that French actors can hit off types so well? It means intelligence and close observation of the prototype. The photography is smooth and beautiful, such at Pathé Frères can give us when they so desire.

The Broken Trail.—Kalem. A photoplay with plenty of Western flavor but without melodrama of the objectionable kind. The remorseful brother's madness is objectionable but not on the score of melodrama. It was entirely unnecessary and lacking in good taste—that is all. A picture cannot stand too many dark tones, and the massacre at the beginning was already enough. The madness was dragged in for effect, and even assuming that it achieved its purpose, the fact still remains that a happy ending with recognition and reconciliation between the brothers would have rounded out the story better and proved even more effective. The acting is all good and the settings equally so. The first few scenes disclosed some fine pictures, with a prairie schooner and family of homeseekers roving across the mountains on their hopeful mission.

The League of Mercy.—Vitagraph. A painful drama; rather well worked up, but none too well acted. The climax was tense with a sharp clash of emotions—painful emotions. There are two subjects that should be rigidly tabooed from the photoplay—suicide and the betrayal of girls. They are entirely too distressing to be allowed a place in the theater. The film-makers used to give us a lot of such, but that was in the bad old days. We should begin to think Vitagraph retrogressive, with its "Society and the Man" and "League of Mercy," were it not that "The Deluge," "Consuming Love," and "Tale of Two Cities," effectually dispel any such misgivings.

The Rival Sculptors.—Edison. A romantic drama laid in ancient Greece. The era was suggested with some success. One of the rival sculptors—an actor whose face seemed new to the screen—created a pleasant impression. Mr. McDermott was not as good as usual. All the actors seemed to be laboring under an effort to appear Grecian without any very clear conception of what Grecian was. As a whole it must be said that the play is better in intention than in performance.

Their Wedding Gifts.—Essanay. Here is an illustration of the fact that your plot may be funny as anything in print, but not bring much laughter in the performance. It takes more than a good basic idea to make a successful comedy. The idea must be worked up; and therein lies the whole secret. It is the details that bring the laughs. Every little detail must have a meaning of its own. This Essanay comedy still remains in a rudimentary stage as far as working up goes. The action is concerned solely with an exposition of the main idea. It is amusing but not laughably so.

Just as the Clock Struck Nine.—Essanay. Almost the same could be said of this comedy as of "Their Wedding Gifts," which is on the same reel. Both are founded on excellent ideas, rich in humorous possibilities, but are meagerly worked up in regard to detail. One feels as if the climax of this subject with the husband and wife playing at such desperate cross-purposes, ought to be screamingly funny; but such it did not prove to be. Those mystical qualities known as "snap" and "ginger" were lacking.

The Old Man and Jim.—Champion. A war drama of considerable merit, staged with good pictorial effect. The battle scenes were rather cramped, but in their narrow compass were effectively arranged. The supernatural tableau effect with Washington, Lincoln and whoever the female was, could well have been left out; Grant's tribute was sufficient. The last part of the film was a long succession of tableaux—each tableau punctuated by the death of the hero. This kept the hero dying every few minutes. At least five times he apparently died and then came to. With every repetition it lost impressiveness. The old fashioned interior setting was interesting, as were the costumes. The production is an ambitious one and deserves credit for the good intention.

The Seminole's Sacrifice.—Selig. This piece is better classified as illustrated biography than as drama. The subject is Red Jacket, the famous Seminole chief, and while it is all dramatic enough, it is not coherent in the plot sense. It is just a string of his more picturesque adventures. The piece proves thoroughly interesting, for we all like a hero and Red Jacket was a real one. Moreover the leading part was enacted in fine style by a man of superb physique and great dignity of bearing—one of the most satisfactory examples of Indian acting ever witnessed. If we had more actors whose physical and histrionic endowments were commensurate with these the Indian subject might become a thing of joy and admiration. The production is a thorough-going one, offering many an instructive glimpse of bygone times and conditions.

A Western Courtship.—Pathé. Decidedly strained is this drama. An essentially farcical complication is handled in a melodramatic manner and the result is neither funny nor convincing—not even melodramatically convincing. When foreign audiences, for whom the piece must have been intended, see it on the cinema screen, how they will wonder and admire! Those Westerners! *Mon Dieu! Corpo di Bacco! Donnerwetter.*

The Axolotl.—Pathé. A biological curiosity clearly presented to view. The complete and intelligible manner with which Pathé handles these industrial and scientific subjects is worthy of all admiration.

His Daughter.—Biograph. It took a long time for this drama to get under way. One kept guessing just what line the action was going to follow. There was a string of introductory incidents from which the action might have shot off at almost any

tangent. When the main complication finally did develop it proved effective in a dramatic way though not entirely probable. If the point of the piece was to show a man's attempt to rob his own house and the frustration of the attempt by the man's own daughter, who held him off at the point of a gun not recognizing him under his disguise, it must be said that it was effected in a peculiarly roundabout and devious manner. And yet to include the love story, it was all probably necessary. It is a curious plot and must have kept somebody lying awake nights. To present it intelligibly kept somebody else awake nights. And it has been presented intelligibly. The acting is Biographical.

The Price of Victory.—Edison. This film is notable for its many fine pictorial features. The battle-field was a masterpiece. The story proved interesting and impressive. The lighting was not very consistent; the difference between one candle and two seeming way out of proportion. For plausibility the lighting of the second room should have been toned down, particularly in view of the fact that half lights would have added to the impressiveness of the scene. The acting rises to the level of the first class. The settings are notable for their depth and detail.

The Show Girl's Strategem.—Lubin. An interesting drama well presented and well acted. The four leading parts bear evidence of intelligent characterization. The literary man, the show girl, the artist, and the neglected wife, are real types—not stage types. The two women especially were excellent: who has not seen them in real life? The plot is not new but proves effective none the less. The two incidents where the show girl dashes her wine in the artist's face, and refuses to shake the wife's hand, are strong, and handled as only a capable actress like Miss Lawrence could handle them. She gave a strong vivid performance throughout.

Who Killed Max?—Pathé. A very funny piece full of comicalities and wit. The plot is rich—as good a burlesque on the detective story as was ever contrived. It is a little masterpiece of wit and ingenuity, typically French. Max was in it—to say which is enough; but it must be added that he scores one of the biggest successes of his career.

An Escape of Gas.—Pathé.—A stupid comic—one of the kind where the merriment consists in somebody climbing up on the furniture and pulling it down on top of him. It is a variety of the slap-stick comedy, only the slap-stick feature consists in breaking the furniture. The first time one sees such a comedy it strikes one as very funny; but never again. The ten or twelve people of an audience who have never seen such a comedy before can always be detected. They laugh immoderately while everybody else sits silent.

The Lily of the Tenements.—Biograph. Does such a delicate, flower-like girl grow in a tenement? It is doubtful. You would have to search the East Side a long time before you found one. She is a sentimentalist's dream. The incongruity would not be so striking were the other conditions not so downright realistic. A lily growing in a rubbish pile would not be more incongruous. But of course the contrast is effective and makes a telling drama. The part of the tenement house lily was taken in a remarkably fine manner. Her appearance alone was a picture, with a pallid face, wan and beautiful, a bitter mouth and dark, hunted eyes. All the pinch and pain of poverty were in her slim, stooping figure. Her acting was equally expressive. Virgin purity surrendering to physical need was wonderfully suggested. The motion picture screen has seldom disclosed a more nearly perfect embodiment of an idea. The other actors are good and there are several very strong scenes. It is a painful drama—so painful that one would turn one's eyes away were they not held in rigid fascination. The effect is wholesome in the highest degree. It is a drama that sears the brain and will long be remembered. To many the face and form of that girl will henceforward be a symbol of Poverty. Also of Purity.

Of Interest to the Trade

By L. F. Cook

New York Letter

The most important subject which we can possibly bring to our readers' attention this week is an idea for improving the productions that is gradually taking root among the film manufacturers.

For a long time now there has been no marked improvement in scenarios. Every other branch of the industry has improved wonderfully, which of course has improved the presentation of the finished production immensely, but there the improvement has stopped. The scenarios, on the whole, are about on a par with those of two years ago. To be sure there are individual stories here and there that stand far in advance of the average, but they are not in sufficient quantity to have any marked influence on the industry.

These exceptional instances of unusual excellence are the result of chance, rather than of study and effort to produce higher grades of stories. The idea has become prevalent that a continuous effort to improve scenarios must be made.

In some quarters this idea is taking the form of two-reel subjects, which appears to be very successful. But this hardly goes far enough. That is, if every manufacturer were producing two-reel subjects, the picture show would become a series of pictures which would be continued tomorrow or day after that, or at some indefinite date in the dim future. The public would soon learn of this condition, and many patrons would become mystified and dissatisfied.

An alternative to this would seem to be the production of two or three-reel subjects, to be released and shown at the same time. Such a course has its many advantages and its disadvantages. In the entire field there are being released, at the present time, about fifty different reels a week. Should every manufacturer commence to produce two-reel subjects, there would soon be a discouraging dearth of good subjects.

The dramatic field, with all its widespread activities, does not produce enough good dramas in an entire year to supply the moving picture field material for a single week, under those conditions.

That does not mean that motography is dependent upon the dramatic field. But if the dramatic field, with its wonderful opportunities for the successful playwright, cannot produce fifty good dramas per year, how do the picture makers expect to tap a source that will supply fifty or even twenty-five a week, at fifty dollars, say, apiece?

The third method that is receiving consideration is the improvement of the single-reel subject. It is a well known fact that most of the present releases are padded to stretch the scenario out to a thousand feet. Some makers do this by slowing down the action, others by lengthening the titles, or sub-titles. Not all manufacturers resort to the latter method. Some makers have a regular schedule for titles and subtitles. This schedule is so arranged as to supply a requisite amount of title for so many words; just enough to allow the audience to read the subject matter.

However, the greatest fault is padding, much of which might be left out with good results for the film. One manufacturer claims, and with good reason, that he can produce the average story of 1,000 feet, as now produced, in 500 feet, and make the story much more interesting. This manufacturer has started with the idea that he wants the audience to be sitting up and taking notice all the time his pictures are on the screen. Instead of showing, for instance, a couple driving up a lane, stopping at a house, entering the house and all incidental details, of no moment whatever to the action of the story, and thus using about fifty feet of film, this manufacturer wants to show the couple turning into the lane, with a house at the end of that lane, and then next show them inside of the house. This method would require about twenty feet to perform the services of what now requires over twice as much. In other words, he would take a scenario that might be used for a two-reel subject, and condense it into one reel that would be teeming with action from title to tail piece.

We are not attempting to say which of these methods is the better, but the fact that these questions are being seriously considered and discussed, augers well for the industry as a whole.

We note by the daily press that his family finally persuaded Mr. Tom Edison to stay away from his laboratories long enough to celebrate his twenty-fifth wedding anniversary. We are glad to find at last something in the daily papers that a moving picture paper can use without wiping a silent tear.

Carlton Has Small Blaze

A small fire occurred the morning of February 18 in the Carlton Motion Picture Company's building, at the corner of Nepture avenue and West Nineteenth street, New York, from what is thought to have been brought about by a cross circuit of defective electric wires.

The fire, which was discovered at 11:15, started on the first floor, where more than seventy men were at work. As soon as the fire was discovered the men quietly left their benches and proceeded to the street. By this time the flames had reached the second floor, where about fifty girls were posing in stage costume in different scenes. For a minute they were bewildered, but later when a report was quietly spread that the building was afire they hastily, though orderly made their exit by means of the fire escape. Those who were fortunate enough to have friends in the vicinity exchanged their stage clothes for more conventional attire. The others were compelled to journey to their homes in their stage make-ups, all their clothes having been destroyed.

In answer to an alarm Battalion Chief Rogers, with a number of his men, hurried to the scene and extinguish the blaze. About $500 damages was done.

Progressive Advertising

The People's Amusement Company of Portland, Ore., owners of several motion picture theaters in the Northwest, recently ran a half page advertisement in the *Portland Oregonian,* on the occasion of that distinguished newspaper's fiftieth anniversary. It was a sepcial issue and the advertisement was paid for at the rate of $500 per page. The remarkable part of the advertisement resides in the fact that the advertiser's name does not appear. The add is purely a boost for the motion picture, without reference to particular persons. It will react to the benefit of the industry at large. This unselfish and broad-minded procedure reflects great credit upon the management of the People's Amusement Company, proving them to be in the front rank of progressive motion picture factors.

Another Picture From an Educational Reel

Last week we published an announcement of the intention of George Kleine to release March 29 a full reel of educational film, comprising two subjects—the first of the kind, it is claimed, ever released in this country. The two subjects are: "Dr. Charcot's Trip Toward the South Pole" and "The Cormorants, or Japanese Catching Fish with Birds." The picture

shown here is another view from the second subject, and shows the cormorants ready to start work.

The whole film is suitable for school use, or would make a splendid lecture feature. In addition to this auxiliary value, it will unquestionably receive an enthusiastic reception at the hands of the better class of exhibitors.

A Notable Film

A film of extraordinary interest has been made by the Lubin Manufacturing Company, namely the grand procession at the funeral of the late Most Reverend Patrick John Ryan, Archbishop of the Metropolitan See of Philadelphia. Rarely before in America has such an imposing company of high dignitaries of the Catholic Church assembled to pay last respects to a distinguished churchman.

Six Archbishops, led by His Eminence, Cardinal Gibbons, of Baltimore, and His Excellency, Most Reverend Diomede Falconio, representative of the Pope; thirty bishops, from all sections of the country, and more than 700 priests participated in the obsequies, while the great edifice was crowded to the doors with a throng of laymen of every creed, paying impressive tribute to the memory of a great churchman, a great citizen and a great man. Outside the doors, about the four sides of Logan Square, were massed not less than 25,000 more, who, unable to witness the ceremonies at the bier of the archbishop, waited for hours in the cold from before daybreak to add their silent tribute as the body was borne slowly around the park to the sombre accompaniment of the tolling cathedral bell.

The pomp and splendor of the ecclesiastical spec-

tacle alone make this a film of extraordinary interest. And not only is it interesting to Catholics, but to Protestants. It would be interesting to men and women of any religion or of no religion. In it are seen most of the great men of the Catholic church in America and a vast array of church dignitaries of various grades all in their full robes of office. An extract from a newspaper report says:

"There were the archbishops, whose flowing purple robes stood out in rich contrast with the deep crimson of the monsignori. In a temporary throne, opposite the vacant draped throne of Archbishop Ryan, sat Archbishop Falconio, dressed in the picturesque, fur-trimmed gray robe of the Franciscans of high rank, attended on either side by Monsignors Kiernan and McCort, as chaplains.

"The last of the distinguished prelates to enter was Cardinal Gibbons, clad in the brilliant red silk robe of his station, preceded by acolytes and followed by train-bearers, and by his two chaplains, Monsignors McDevit and Sinnott.

"As priests and prelates wound their way, two abreast, out of the main dorway of the edifice and around Logan Square, the face of the dead Archbishop was revealed to thousands through the glass sides of a hearse as it was drawn slowly past them by four black horses. Heads were uncovered as the hearse encircled the square, with the van of the procession keeping pace with it. From the windows and roofs of the houses overlooking the scene hundreds of other persons caught a parting glimpse of the familiar features of the archbishop whose death had filled all with profound sorrow.

"When the hearse finally returned to the front of the cathedral the remains of the archbishop were tenderly carried back into the cathedral and lowered into the crypt beneath the main altar, where his predecessors, Archbishop Wood and Bishops Egan and Conwell, already repose."

The film is of great excellence from the photographic standpoint, every detail of faces and robes being well defined. It is a picture of a great current event, extraordinarily interesting to people of all creeds. It will be released at an early date.

Vitagraph Notes

Tuesday evening February 21, Miss Florence E. Turner was given a Vitagraph night reception at Patchogue, Long Island. It was held at the Unique theater, of which Nathan Goldstein is the proprietor. Miss Turner and the Vitagraph's representative were met at the depot by the firemen's brass band, who gave her a hearty welcome, playing "The Vitagraph Girl." She was then driven in a special conveyance to the hotel.

In the evening she was again saluted by the band upon her entrance to the theater, which was filled to the doors, and a large number on the sidewalks could not get inside until the second or third performance. Many went away disappointed, because they did not want to wait in the cold to gain admittance. It was a very large evening. Mr. Goldstein, who is a personal friend of Miss Turner, made her visit to Patchogue one to be long remembered by her and by the people of that thriving town.

"A Republican Marriage," a French drama of the eighteenth century, which will be issued by the Vitagraph Company April 1, is a picture of rather unusual historical significance and entertaining story.

A few pointers on April Vitagraphs are "Though Your Sins Be as Scarlet," "Eastern Babies," "Windsor McKay," "The Stolen Claim." It will be well to remember these.

A Sunday Experiment in Texas

The movement to open the moving picture shows in Beaumont on Sunday was made February 19, and resulted in the arrest of the proprietors of four of the leading picture theaters. The arrests were made by Sheriff Jake Giles and deputy and each of the men arrested furnished an appearance bond. Sheriff Giles appeared on the scene about 2 o'clock, after the shows had been running about two hours, and moved quietly from one show to another, bought some tickets and saw some purchased by a couple of young men he had along for the purpose. The formality of furnishing a bond was quickly disposed of. Mr. Giles, however, made an unexpected move when he informed the picture theater managers that he purposed to arrest them every time they sold a ticket. This resulted in an abandonment of the charges for admission and the shows were thrown open free to the public the rest of the day.

The arrests were made by the sheriff after a conference with Mayor Fletcher and Chief of Police N. N. Smith, who went along with him. It was agreed to let the case go to the county. The program is that the show people will agree to the facts and while the charges will be filed in the county court a writ of habeas corpus will be filed before District Judge Hightower, who will be asked to render his opinion.

A Scenic Poster

The George Kleine Company, in pursuance of its always progressive and "uplift" policy, has sent the following letter to all licensed exchanges:

We are trying an experiment in posters and would like to have your opinion as to its value.

On March 11th we will issue a Gaumont reel which will contain a story film called "His First Sweetheart," 560 feet in length; and a scenic film "Beautiful Gorges of the Tarn," 415 feet. Instead of illustrating the story film, we are issuing a poster reproducing one of the scenes in the scenic film. Sample copy is being mailed under separate cover.

What is your judgment as to the practice of printing an occasional poster of this character?

This scenic poster is along the same lines as the full scenic reel which the Kleine company will issue later in the month. It is to be hoped that the two innovations will elicit comment from the trade.

Salt Lake City Firm Sued

Two suits against the Florence Film Company and Max Florence were filed in the Third District court at Salt Lake City, Utah.

In the first action George S. Auerbach is the complainant, and seeks to collect $700 alleged to be still due and unpaid on a promissory note executed to him by the defendants. Auerbach also asks for reasonable interest, attorney's fees and costs of suit.

The second action was brought by the Western Electric Company to recover $592.65 declared to be unpaid and due on certain fixtures and goods purchased by the defendants under contract. The plaintiff asks that payment be enforced, and interest and costs of suit granted.

M. P. Men Challenge Clergmen

Following the attacks made upon the moving picture shows and theaters at Grand Junction, Colo., by the ministerial alliance, the managers of the playhouses have issued an open letter to the ministers and to the public in which a defense of the theatrical profession is made. The letter declares that the local theaters teach more moral lessons to larger audiences every night in the week than the churches do on Sunday. The ministers are invited to attend the shows free of charge and are asked to find one instance where anything degrading is staged.

Synopses of Current Films

From the Manufacturers' Bulletins

American

HYPNOTIZING A HYPNOTIST.

A certain learned professor who had delved deep into the hidden mysteries of the occult, took up, as a pastime, the study of hypnotism, and having reached the stage of what he considered was proficiency, sallied forth one bright morning to make some practical experiments. In a sanitarium he found a lot of likely subjects, and without their knowledge or consent, placed them all under his spell. They obeyed the domination of his will and indulged in many strange and fantastic actions. After satisfying himself of his ability to hypnotize, he brought them back to a normal state of being, but his patients failed to appreciate the humor of the situation, and finding themselves in many undignified positions, fall on the professor and almost beat him to a pulp. They leave him helpless and an easy prey for his landlady, an unattractive spinster, who has long and unsuccessfully angled for a corner in his affection. She found the volume on hypnotism which he has been studying, and as soon as she spies the helpless professor, resolves to try an experiment on her own account. She places him in an hypnotic trance and to make assurance doubly sure, leads him to a justice of the peace. This dignitary, however, hesitates when requested to perform the marriage ceremony, so she at once places him under her spell and the ceremony is performed and she leaves with her catch proudly waving her marriage license. She takes her newly wed spouse to their home where she tries to bring him back to his original condition, but is unable to, so she defies all the ethics of the code and resorts to a bed slat. She beats him back to life again, shows him her proof of claim on his heart and home, and he swallows the bitter pill. Takes her in his unwilling arms and decides to make the best of what must be endured.—615 feet.

MEMORIES.

A little child's influence for good in this world is a theme of never failing interest and one that is aptly illustrated in this simple little story. A wealthy banker, in the early years of his married life, suffered a terrible blow when he was robbed of all that he held dear in life, his young wife and baby girl. The loss left him an embittered, hardened man, vainly trying to fathom the dispensations of an all wise Providence, but with a heart, empty and hungering for love. One particular night, when more than usually depressed, he wandered aimlessly through the snow driven streets; he is attracted by the gare of light from a window, through which he sees a children's party in progress. The room is filled with a merry, happy throng of youngsters and the whole atmosphere is permeated with the love he lacks and so greatly needs. He gazes through the window, spellbound and longs with an awful yearning for the touch of the vanish d hands. A little waif, ragged and homeless, has also been attracted by the warmth and light within, and looks through the window hungry for something she has never yet experienced in her young life. Overcome, she sinks sobbing in the snow. He sees his poor little companion, kneels beside her and on questioning her, soon discovers they have a common bond of sympathy. He covers her with his warm coat, and takes her at once into his heart and home.—375 feet. Released March 6.

THE RICH AND THE POOR.

John Craig is the superintendent of the Stamford Iron Works, whose president and proprietor is Howard Armstrong. At the time of the story the workmen employed in the works are in a state of discontent, they are poorly paid and over-worked, and receive little sympathy or consideration from their employer. His overbearing and dictatorial manner has made him many enemies amongst the men and only the interevention of Craig has kept them in check. An agitator called Fritz Schram is a leader of the malcontents and offers as an ultimatum, arbitration or strike. Craig goes to Armstrong's house, Craig discovers evidence proving that he and not Armstrong is the actual owner of the Iron Works. All interest in the same having been left him in trust with Armstrong by his adopted father. When confronted with this fact, Armstrong whines for consideration for his daughter's sake, in whom Craig is very much interested. Craig grants his request, providing his fellow workmen are given their just rights. Armstrong agrees to confer with them the following day and Craig leaves satisfied. At the meeting which follows, however, hard words are spoken on both sides. Armstrong repudiates his promise, defies Craig and the committee, the result being that the wheels are stopped and the workmen strike. Weak minds inflamed by weeks of starvation and liquor cause the strikers to decide to take the law into their own hands, wreck the factory and kill Armstrong. He comes to Craig for protection from the fury of the mob. He is compelled to relinquish all his false claims and interest in the works. Craig is installed in his rightful place and once more the wheels go around.—1,000 feet. Released March 9.

Essanay

THE LITTLE DRUDGE.

Upon the death of his father, Ray Davis, a young country boy, decides to seek his fortune in the city and tenderly bidding his mother and little sister, Mary, good-bye, he leaves the house. Some time later, having met with some success in the city, Ray proposes to the daughter of his boarding-house keeper and is eagerly accepted. They are married and but fairly settled in their little flat, when Ray receives news of the death of his mother. Ray goes to his home town and returns with his sister Mary. It is then that he discovers the jealous nature of his wife, who puts all of the hard work on the little girl and gives her tasks to do, work of a

nature which overtaxes her strength. A climax comes when the little one, through the carelessness of her sister-in-law, is nearly asphixiated by gas escaping from the kitchen range. The incident awakens Ray to a realization of his wife's unfitness and after a stormy scene she leaves the house, while Ray takes his little sister to his heart, promising that in the future no one will come between them.—1,000 feet. Released March 7.

THE ROMANCE OF "BAR O."

Young Jack Parson, the foreman on the "Bar O" ranch, is in love with Alice Walton, daughter of his employer. Alice rejects the young cowpuncher, but asks in a kindly way that they continue as good friends and nothing else. Contrary to her anticipation, Parson is stung by the girl's refusal, and while seemingly accepting Alice's verdict, deep in his heart he fosters a desire to "get even" with her. He slightest attention to any of the other workers on the "Bar O" arouses the intense jealousy of the young foreman. One day, while out on a canter, the spirited horse stubbornly refuses to ford a stream, and, becoming angry, endeavors to throw his fair

rider. At this moment a stranger, on horseback, rides on the scene and seizing the frightened animal's bridle, drags his horse across the stream and Alice out of danger. Young Sherwin Wells and Alice soon become acquainted. The girl learning that her rescuer is out of employment, persuades her father to give him a position. Parson greets the new cowpuncher with a surly nod, and when Alice shows her preference for the new man in allowing him to accompany her on long canters on the ranch, his jealousy knows no bounds. A few days later one of the cowpunchers is discharged for whipping Alice's pet horse, young Wells being instrumental in obtaining the release of the brutal puncher. Parson now sees an opportunity for revenge and enlisting the discharged man, unfolds his plan. A valuable horse is stolen from the Walton's stables and taken to Well's shack. Parson gives the alarm and accuses Wells of having stolen the horse, and evidence points that way when the horse is found at Wells' shack. In the

meantime, a black servant to the Waltons has learned who the real thieves are and informs Alice. She rides to Wells' shack, arriving just in the nick of time to save the new cowpuncher's life. Parson is then accused of the crime by Alice, and is dragged off by the other cowpunchers to receive his just deserts.—1,000 feet. Released March 11.

A DECREE OF DESTINY.

Biograph

In this Biograph subject is presented a story of two sisters, who, brought up in a religious atmosphere, place an importance upon the efficacy of prayer that is beautiful. Kenneth Marsden, a young artist in failing health is advised to go South where the balmy air is conducive to a betterment of his condition. Acting upon this advice, he leaves his club friends after a little good-bye spread and is soon in New Orleans, where he expects to find accommodations with an old-time friend of his mother. The old lady receives the son of her dear friend with open arms, but her two convent-bred nieces, Mary and Edith, are horrified at the thought of a man in the house. However, it isn't long after his arrival that he has made a decided impression upon the young ladies, but no more than they have impressed him. Kenneth is at a loss to know which of the two he cares most for, as they are both so gentle and artless. Still, he feels that Mary likes him for he reads her more clearly than Edith. Still he is impartial in his attitude towards them. Some time later, while out for a stroll, he is caught in a rain-storm and drenched to the skin. The old lady is prompt in her solicitude for his condition, and though she administers preventitives he is stricken down with pneumonia and for a time his life is despaired of. The two girls are ever in the extreme of anxiety and when the time of the crisis arrives Mary's disquietude becomes so intense that she goes and kneels before the little shrine to the Blessed Virgin in her room and prays for his recovery vowing to consecrate herself to the church if her prayers are answered. While she prays there is a turn for the better in Kenneth's condition, and the doctor assures them that he will recover. A few days later finds him convalescent, and realizing that Mary's solicitude is induced by love he is about to make his choice between the two sisters, and in fact he at first receives encouragement until she remembers her vow and recoils. This episode is witnessed by Edith, who goes to her room almost heartbroken. Mary, upon going to her room, finds Edith in tears and learining the cause, plans a subterfuge to send to Kenneth. Well, the outcome is that two weddings take place, the spiritual and the material. Mary is wedded to the church in a scene showing the heautiful ceremony of a postulant receiving the veil, while Edith is wedded to Kenneth. The receiving of the veil is presented with absolute authenticity.—995 feet. Released March 6.

CONSCIENCE.

The most compelling influence in man is his conscience. It either makes arrant cowards or brave heroes of us; it is the real foundation of all morals and ethics; it is the rock upon which the well-being of the human family is built. While the conscience plays an important part in this Biograph production there are two other points brought to light—the fallibility of circumstantial evidence, and the injustice often induced by the third degree examination. Howard Raymond, with his wife and little child, are spending the season at their hunting lodge. The bad coffee furnished for the first breakfast occasions a slight quarrel between Howard and his wife. Realizing he has unreasonably hurt his wife's feelings, he playfully placates her and in a joke points his gun at her exclaiming, "Better coffee, or you die!" At this point the maid and the child enter and in alarm think him in earnest in the threat, to the amusement of Mr. and Mrs. Raymond. Laughingly he starts off on his hunting trip, but he has hardly departed when the maid discovers he has forgotten his game-bag, so the wife hastens after him with it, arriving at his side just as he has shot his first charge at a deer. The wife, giving him the bag, turns to go back, when she is shot and killed by a bullet from the gun of a hidden hunter who has mistaken her through the brush for game. Her cry startles the hunter together with two others in another part of the woods, all of whom rush to the spot from whence the cry came. The man who fired the shot, however, lurks in the distance horrified at the result of his carelessness, for he realizes that his shot felled the woman. Hence, panic-stricken he rushes to his own lodge and hides. The other two, however, feel it a moral duty to stay and investigate, they having found one charge of Raymond's gun discharged with the cartridge shell still warm. All this seemed strange and together with the story of his threat in the morning, as related by the maid and child, sums up circumstantial evidence which most convincingly points to the husband. In the face of this he is accused by the detective who is summoned to work on the case. Raymond, however, is adamant in his declaration of innocence and he is subjected to the terrible ordeal of the Third Degree in order to wring a confession from him, for the facts of the case seem logically conclusive. For a long time he holds out, but at length, tortured beyond endurance, he in desperation accuses himself of the deed he did not commit. Meanwhile, conscience is preying upon the real perpetrator and unable to resist its urging longer, he bursts into the midst of the inquisitors and confesses that he shot the bullet that killed Mrs. Raymond, mistaking her through the bushes for game, thus exonerating the poor heart-sick husband, who now finds consolation in his child.—995 feet. Released March 9.

THE RIVAL CANDIDATES.

Edison

In a pretty suburban town a prominent citizen owning a pretty home, with lawn and shade trees before it and with comfort and contentment within, finds himself honored by the nomination for mayor of the town. His wife is not wholly pleased with the idea and becomes strongly antagonistic when she sees the notification committee and realizes the class of men with whom her husband must be associated in the local politics. As he refuses to give up the game, rather liking the possible honor ahead of him, she decides, when the offer comes to her as it does a little later, to accept the nomination from the suffrage party as the rival candidate to her husband in the coming election. Of course the house is promptly divided against itself; the small boy with his father, and the two little girls with their mother. And the suffragettes take possession of the mansion, hanging a banner over the front porch announcing that it is the headquarters of the women's party. They even turn the husband out of doors and invite him to sleep in a tent upon the lawn. He does so, and makes the tent the headquarters of the fusion party. And then the campaign begins in earnest. He brings a fife and drum corps on to the lawn, but their music is doubly discounted by the din of tin pans and other cooking utensils hastily brought by the wife from the kitchen and wielded by the hands of the militant suffragettes. One pretty little touch of treason in the camp of the suffragettes—and a beautifully effective scene it is—comes when the children steal out at night in their little nightgowns to bid their father good night. The war proceeds the next day and for days thereafter with rival meetings. The husband addresses a large crowd of men, and the wife and her adherents post themselves outside of the window holding a street meeting, with the accompaniment of horns and so forth, which finally stops the husband's meeting and interferes with the expression of his patriotic sentiments. Then at the polls the two candidates meet and we see them casting their votes, scornful of each other. Then the returns come in and we see the crowd watching them; the Fusion ticket is far ahead and the men are joyful, but the women are rather disheartened. But later bulletins come and gradually the men become less confident and the women more hopeful, until finally the men's hats descend over their eyes and the women's smiles broaden very appreciably. The last bulletin shows the women's party a little bit ahead and the Fusion party lagging behind, while the Labor party, the third one in the field, brings up a very disastrous third. The last scene shows the morning after the election, the arrival of the morning paper and the husband stealing from his tent to get the first news. As he reaches for the paper his wife's hand appears out of the crack of the front door, likewise reaching for the news. They meet thus and the husband hands the wife the paper, whereupon she meets him half way and invites him to read the election returns with her on the doorstep. But when they glance at the paper a surprise awaits them. The headlines announce that Labor wins, both the Fusion and Suffrage candidates being defeated by a startling reversion of popular vote. They are at first dismayed, but they begin to see the humor of the situation and decide that it is probably the best thing that could have happened; whereupon they conclude that, politics being out of their lives now for good and all, they can return to normal contentment and the joy of living the life of plain, happy citizens.—1,000 feet. Released March 1.

THE WRITING ON THE BLOTTER.

The dishonest manager of a large establishment evolves a scheme whereby he can steal ten thousand dollars of the firm's money without having suspicion attached to himself, but rather upon the firm's innocent cashier. He explains his plan to his accomplice—the cashier is to take the ten thousand dollars to the bank in a small satchel for deposit—they are to procure another satchel, an exact duplicate of the one the cashier is to use, and fill it with worthless paper—this satchel is to be exchanged by the accomplice for the one containing the real money when the opportunity presents itself. We see the cashier, his sweet young wife and their baby at breakfast in their happy home. It is baby's birthday and mother is anxious to have daddy come home early and cut baby's birthday cake, which he promises to do, and starts for the office with a light heart and a happy smile. That afternoon at the office he is called upon by the manager, in the latter's private office and in the presence of the president of the company, to take the money to the bank for deposit. It is placed in the satchel and the cashier starts for the bank. The accomplice, who has been waiting patiently outside the office for the cashier to appear, sees him step into a waiting taxi, and before he can start, manages to puncture the tire of the taxicab. This attracts the attention of the cashier and he leans out of the window to learn the nature of the trouble. While he is thus engaged the accomplice reaches in through the opposite window and taking out the cashier's bag, deftly puts the one containing the worthless paper in its place and with a hurried glance up and down the street to assure himself that he has not been observed, makes off. The cashier, realizing that the taxi is out of commission and that it is very close to the closing hour, decides to walk to the bank. Arriving at the teller's window he is dumfounded to find that the money has disappeared, and he rushes in breathless haste back to the office only to be accused of stealing the money by the manager, who, sneering at his vehement protestations of innocence, promptly calls in the police and has him arrested. The cashier notifies his wife, who immediately visits him in jail. She learns the circumstances from her husband and at once, with woman's unerring intuition, suspects that the real criminal is connected with the firm. She resolves to apply for position as stenographer in the office (which position happens to be vacant at the time), makes her application to the manager and is promptly accepted, the manager being impressed as much by her good looks as by her qualifications for the position. She watches him continually, but finding no clue, is about to give up in despair, when she discovers him hiding a letter which he has been writing. Suspecting something wrong, she secretes herself until he has left the office, then searching carefully finds the blotter he has used. This she holds up to a mirror and learns to her delight that it is an appointment to meet the accomplice in the office after business hours in order to divide the money. With this proof of her husband's innocence she hurries to the president's house, who at once decides to catch the culprits red handed. They hurry to the office with police officers and burst in upon the manager and his accomplice just as they are about to divide the money. This being absolute proof of their guilt, the president obtains the immediate release of the cashier and, as a reward for the injustice he has suffered, offers him the position of manager. The happy reunion of the husband and his faithful wife is a fitting climax to the trials and sufferings which both have endured through the schemes of two unscrupulous men.—1,000 feet. Released March 3.

LOVE AND THE STOCK MARKET.

There is a delightful heroine, whose abundant wealth and enviable social position are supplemented by a character that is not only lovable and sweet but distinctly capable of making its own choice and decision in matters that concern the girl's life. She is interested in a young chap whose one failing seems to be his passion for stock gambling, a luxury which he can ill afford. Another suitor of hers is a man of the world, of wealth almost equal to her own, and one whose worldly experience would naturally give him a pretty solid advantage over the boy in any game save that in which Cupid takes a part. Early in the story we see the girl warn the boy against his propensity and try to elicit from him the promise to stop his precarious operations with the "bulls" and "bears." A little later the older man sees an order which the young man has just made for the buying of some shares of a certain traction stock—S. Y. &

D. He conceives the idea of putting the boy out of business, and also out of the running for the girl's heart, by opening up a bear campaign which will so depreciate the value of S. Y. & D. that the youth will be sold out. The plan succeeds admirably and the boy is reduced to the verge of desperation, even going so far as to come to the older man for aid, of course not knowing that the older man is the one who is influencing the market against him. Both men tell of their operations and the girl thereby becomes cognizant of the situation. She decides to take a hand in the game herself, and going to her own broker, instructs him to buy S. Y. & D. until the market turns and climbs up again. He does so, and of course the young man is thus rescued and the older man put to confusion.—1,000 feet. Released March 7.

A NIGHT OF TERROR.

Two young men from the East, while on a little prospecting trip in the Rocky Mountains, seek shelter for the night in the old log shack which answers the purpose of an inn in that rough-and-ready country. It is frequented by cowboys and conducted by a rather fierce looking but harmless man and his untidy wife. The tenderfeet are received with scant courtesy and are given two bunks in the attic, which is also used as a store room for hams and dried meats. Sleep in such uncomfortable quarters and under such unfavorable conditions seems almost impossible, especially for the more timid one of the two, who, nervous and apprehensive of danger, sits up all night. At four o'clock in the morning the landlord and his wife arise to kill two chickens for breakfast. "Must we kill them both?" is the question asked by the man, to which his wife replies in the affirmative. The tenderfoot in the dingy attic above, hearing this, is nearly frightened out of his wits. A few moments later the landlord goes to the attic for ham. The trembling tenderfoot seeing this fierce looking individual with a huge carving knife coming up the attic ladder, jumps to the conclusion that his last moment on earth has come. He hastily scrambles into his bunk and pulling the blankets over his head, awaits the slaughter of himself and friend. After cutting off a slice of ham, the landlord quietly steals out of the attic and shortly after calls his guests for breakfast. Still trembling with fear, the tenderfeet go to the room below, where they are served two roasted chickens and are informed that "both were killed" for their special benefit. It now dawns upon them that their fears were unfounded and they settle down to enjoy a hearty breakfast after "a night of terror."—400 feet.

THE OLD FAMILY BIBLE.

Mary Brash and Tom Carroll are engaged to be married. Just before leaving his home to attend a ball with Mary, Tom discovers that he has forgotten to remove some valuable papers from his pocket and being in a hurry and not wisbing to go back to his room, he hides the papers in the most available place—the old famiy bible—and hurries out. At the ball he becomes insanely jealous of Clem Bannes, who is very attentive to Mary, and he accuses her of showing partiality toward Clem in allowing him to put his name on her dance program for a greater number of dances than Tom thinks proper. Mary resents his accusation and they part in anger. The next day a book agent calls at the Carroll home. He explains to the servant that he is selling bibles on a new plan—he will take the old family bible as part payment for a new one. The servant, thinking this a remarkable bargain, buys the new bible on her own initiative, letting bim have the old one as part payment. During his various calls the agent arrives at Mary's home and explains his plan, showing her the old bible he has taken in exchange at the Carroll's. Mary, on opening the old bible, finds that it belongs to Tom's family and is at once desirous of possessing it for old times' sake. She strikes a bargain with the agent for the sale of the old bible and carries away her treasure. In the meantime Tom has not missed his valuable papers until at lunch one day the servant shows the family her wonderful bargain and explains that she exchanged it for the old family bible. Tom at once recalls that he had put his papers into the old bible, and thinking they are now lost, rushes frantically from the house in search of the book agent. Arriving at the hotel he finds that the agent has already gone to make his train. He catches him, however, just as he is about to board the train, and learning from him where he has disposed of the old bible, burries away to Mary's home. Here he is very much embarrassed at meeting Mary again, but finally manages to explain his errand. Mary and Tom pick up the old bible and in searching for the papers their hands touch. They both realize in that moment how foolish their quarrel has been and their love having remained unchanged, they are happily brought together—thanks to the old family bible.—600 feet. Released March 8.

HOW BELLA WAS WON.

This latest addition to the list of Edison productions, taken from the works of Charles Dickens, has for its source "Our Mutual Friend," and introduces us to the living impersonations of the familiar and well-loved characters of that story. The first scene shows John Harmon, our hero, arriving in London after an absence of many years and starting to purchase clothes suitable for his appearance as the beir to the vast Harmon estate. Stopping at a small clothing store on the banks of the Tbames, he lays off his coat to try on one of the new ones and a character, who seems to belong to the docks, slips in and examines the papers in Harmon's pocket. Among them is the will, a section of which indicates tbat Harmon must marry a certain Bella Wilfer in order to inherit the property, which otherwise will go to old servants of his family, the Boffins by name. Just as the thief is secreting these papers in his pocket Harmon discovers him, and a struggle ensues in which both men fight their way to the back of the store, where they fall through a railing into the Thames, over which the building hangs. The next scene shows a placard announcing the death by drowning of John Harmon, identified by papers in his pocket. When Harmon reads this placard he decides to let the fates have their way and to become acquainted with Bella Wilfer under another name, thus finding out what sort of a girl he must marry in order to inherit his fortune. We see him, as John Rokesmith, engaging lodgings at the Wilfers' and gradually becoming friendly and even lover-like in his attentions to Bella. Tben comes the ad of the Boffins, who have by this time inherited the fortune; they are in need of a secretary and Bella suggests that Harmon apply. Seeing a way to further his plans by so doing, he goes to them and though they seem to note some familiarity in the face of the man whom they engage as secretary, he is taken in under an assumed name. And they then invite Bella, who by the death of Harmon seems to be cheated out of a fortune, to come and live with them. Thus Harmon and Bella are under the same roof, but Bella is now an heiress and rather looks down upon the humble secretary. Finally Harmon proposes and is refused by the girl and in his despair sits down before the fire in an attitude which recalls to Mrs. Boffin his childhood days, and she at once recognizes him. Admitting his identity, he tells the mof Bella's refusal and that he fears her character has been warped by the wealth thrust upon her. They decide to try her temper and find out how she really feels; consequently they start abuse and disparagement of the secretary, which she rather resents, and finally when she shows a little pity and he responds with lover-like attention again, old Boffin discharges him for daring to presume to the hand of his ward. This is too much for Bella and throwing aside all her false pride, she announces to the Boffins that she loves John Harmon and that she refuses to see him abused any longer. Of course this brings the story to a happy conclusion and they tell her who her fiance is, whereupon she decides that she loves him even if he is not the man she supposed he was.—1,000 feet. Released March 10.

IN THE COMMISSIONED RANKS.

Nestor

Jolly Colonel Anderson was a big, manly chap, but for all that he was something of a "spoony," and had never lost an opportunity of "dragging a feminine to a hop." Nor had gay, pleasure-loving Mildred Denmare ever lost an opportunity of attending one. Still, had she but dreamed that the captain spoke the truth when he insisted that their little Edith was really ill, nothing would have induced her to go. But the child had repeatedly assured her mother that she felt perfectly well, and Mildred flitted away, happy and content. Surgeon Bockwell had no sooner examined the little one, however, then he sent Private Wells in search of Captain Denmare, who was officer of the day, and instructed him to bring Mrs. Denmare home at once. But so infuriated was the captain at what he considered the mother's neglect, that words passed between himself and Colonel Anderson, and but for the interference of Captain Woods, might have resulted in blows. Instantly the colonel summoned Sargent Kirby, his orderly, and the unhappy father was placed under arrest. Without a moment's delay, kind-hearted Major Miller assisted the hysterical wife to her home. But alas, already it was too late! Little Edith had breathed her last. Shocked at the tragedy, for which he felt in a manner responsible, Colonel Anderson sent the Captain, under guard, to his wife. Instead of offering her the consolation of which she stood so sadly in need, however, the husband upbraided her so harshly that a separation seemed inevitable. Indeed, as soon as the little one was laid to rest, Mrs. Denmare packed her trunks and prepared to leave. Their mutual friends pleaded in vain; even on the day set for her departure, Colonel Anderson called to bring about a reconciliation. Here, he found the couple in a heated dispute over the child's little frocks and toys. But succeeded, nevertheless, in getting them to promise that each would take half; then wisely slipped ito the next room to await results. With streaming eyes and loving hands husband and wife grudgingly divided their little darling's things. Each held a memory of its own; each was so dear, so precious in the eyes of the bereaved parents. At last her doll, the beloved companion of her childish joys and sorrows was disclosed. Hungrily they reached for the cherished treasure and their bands met. For an instant the couple gazed into each other's eyes. Then suddenly the barrier was swept away, the wife clasped her arms about her husband's neck, while he gently and tenderly soothed her.—Released March 8.

OUT OF THE ARCTIC.

Solax

Helen Morris is loved by Dr. Hartley, and while she does not care for the Doctor she is so urgently begged by her father to accept him that she frankly concents to do so. Later she meets Walter Hughes and the young couple fall violently in love. The doctor surprises them during a scene where the young lovers are oblivious to all the world and starts to upbraid Helen for her faithlessness. Helen promptly tells the doctor that she cannot become his wife, and returns his ring. The doctor conceals his rage but determines upon a subtle revenge. An arctic expedition is being quietly organized of which he is the head, and he contrives so that Walter in cajoled into signing on for the voyage. When Helen hears the news she realizes that the doctor means no good to her lover, and begs Walter not to go. Walter, who has been taunted and ridiculed for his backwardness, tells her that it would be impossible for him to back out now. Helen then seeks Dr. Hartly and begs him to release her lover, the doctor consents, knowing full well that Walter will not now withdraw. Helen finally swears him upon a crusifix that he swears that he will return her lover to her unharmed. The doctor takes this oath and the expedition departs. We next find the members of the expedition in a box house on the edge of the Uorthern wilds. They depart for their ship, and the next scene is in the cabin of their ship. The ship is crushed by the ice and an explosion occurs. The doctor and Walter by some strange fatality are the only ones of all the ship's company that are left alive. They remain around the ship's wreck for several weeks, the doctor's hatred for his successful rival increasing daily. Finally they depart in a hazardous effort to get South. Walter is helped along by the doctor until they get to the snow house within which the yseek shelter. Walter in a delirum murmurs Helen's name, which so infuriates the doctor that he raises an axe to strike the fatal blow. Helen appears as a vision to him, her extended hand holding the crusifix, her lips murmuring a reminder of his oath. Panic stricken, Hartly drops the axe, renews his oath and taking Walter on his back starts on his desperate effort to gain civilization. Far south a fete is in progress, among the fair we see Helen, suddenly she stops—a look of horror passes over her face—the scene in the box house now being enacted in the Northern wilds is before her gaze. Wildly she turns to her father, requests him to take her away. The family, acting upon Helen's insistence that they go, depart for the north, and we see them as the drama draws to a close in the box house. A cry is heard from the outside, they look and find Hartly and Walter—the former having carried the sick boy on his back the whole distance. He staggers in with his burden—sees Helen, points feebly to his charge, "I have kept my oath" and falls prone upon the floor.—Released March 8.

Vitagraph

THE WILD CAT WELL.

Frank Hurley, who deals in defunct oil properties, is trying to win the affections of Lillian Farmswell, but he has a wortby and successful rival in Jack Tarbell, a bard working, industrious fellow wbo bas saved considerable money and is looking about for a chance to invest it. Lillian's fatber favors Hurley, who is considered wealtby, while Jack is comparatively poor. Naturally Hurley dislikes young Tarbell, and his batred increases as Lillian's love for Jack becomes more pronounced. Hurley hears that Jack is looking about for an investment and induces him to purchase a "Wild Cat," or a supposedly useless well, witb the sinister purpose of swindling Jack out of his earnings and putting bim "in wrong." with Lillian. Jack goes to work with a will to make it pay and strike it rich. The steam drill is put in action, pipes are sunk, and after several days of hard boring they decide to insert nitro-glycerine and "shoot the well." Lillian's father is engaged to do the job, and Lillian is invited to drop the "go-devil," or ignition cap, into the bore. Jack and Lillian bave an understanding that if he stirkes oil they will get married at once. Jack writes a letter to a young clergyman, who was a school chum of his, to be present at the "shooting" of the well, in case his services are needed in a professional capacity. The young prelate accepts the invitation and comes to see the "blow-out" and wish his friend luck. At Jack's signal, a whistle, Lillian drops the "go-devil" into the well, and after the smoke had died away, oil bursts forth in a steady stream and shoots high into the air. Hurlely, foiled in his plot, cannot disguise his disappointment and displeasure, and while he is trying to explain matters about the "valuable" property he had sold to his friend Tarbell, Lillian and Jack are being married on the spot by Jack's friend, the clergyman. After the ceremory Mr. Farmswell comes forward and congratulates Jack, and gives his blessing to the young couple.—Released March 7.

THE BRIDEGROOM'S DILEMMA.

Billy Gordon and Helen Truesdall are going to be married, announcements of the wedding are out and the day set. Billy is making all preparations, and is now, on the day of the wedding, putting on the finishing touches. He is ready to go to the church, where the knot is to be tied, be just has time to get tbere, when he notices a black stain on his bridal trousers; be is distressed. He gets busy taking off bis trousers and applying a strong smelling eradicator, removes the stain. The odor of the eradicator remains in the clotb and he hangs his breeches out the window to air. A mischievous boy with a pair of scissors comes along and cuts off the legs of the trousers, when Billy pulls in what is left of them he almost falls over with astonishment. Tbere is no time to be lost. Billy bas sent bis trunk to the rairoad station and he hasn't a second pair of pants in the house, and finds it impossible to secure a pair. He thinks up an idea. He pins the legs of his trousers onto his drawers, puts on his frock coat and, while he looks all right below, be is very anxious about his appearance above the knees. He goes to tbe church, is married, but during the wedding feast, at tbe home of bis bride, tbe deficiency in his costume is discovered, and he gets "in wrong" with bis bride, bis father-in-law and the guests. He rushes from the scene followed by his wife's father, to whom he explains the cause of his discomfiture, the old gentleman loans him a pair of trousers, enabling him to return to his wife and to continue the festivities with his friends and guests.—Released March 10.

RED EAGLE.

A superstition exists among the Indians that a red eagle is a bird of ill omen, and the member of any tribe of red men who happens to see it first will be followed by misfortune until the bird is killed. Onita, an Indian princess, discovers the bird and becomes exercised, tells her fatber and Brave Heart, her lover. The chief declares tbat the one who kills tbe red eagle shall marry his daughter. Brave Heart vows that he will kill it and remove the dread from Onita. Jim Smith, a half breed, admires Onita witb lustful eyes and tries to force his attentions upon her and constantly menaces her with death if she will not marry him, she repulses him and be tries to overpower her. He is a nemesis to her, and sbe fears him. The medicine men assemble and try in every way to dispell the evil of the red eagle, but without success. Brave Heart, taking his bow and arrow, starts out to kill the bird, he sees it perched on a cliff, shoots his arrow and the bird falls dead, thereby breaking the baleful charm. The young brave hastens with the dead eagle to the wigwam of Onita's fatber and claims the princess as his wife. A week after their marriage, they are living in their own wigwam, when she spies the dead eagle's mate, which appears to avenge the killing of its partner and bring another spell of ill luck over Onita. Jim Smith follows the girl to her new home and while she is engaged in beading, he takes off his coat, throws it over her head and bears her, struggling, away. Making his way to the edge of a cliff, he climbs down the jagged side witb Onita, tied hands and feet, in his arms, making a most perilous descent, until he reaches a projecting ledge and lays the helpless princess down. Brave Heart kills the red eagle's mate and as it falls down the cliff it passes Smith who, startled, loses his balance and falls in a lifeless mass on the rocks below, beside the gurgling rapids. Brave Heart looks over the cliff, sees Onita, makes his way down the steep side of the precipice and when he reaches her removes her bonds, clasps her in his arms and raises his eyes towards heaven in gratitude and thanksgiving to the Great Father.—Released March 11.

Among the Picture Theaters

ALABAMA.

The New Royal is the name of a handsome moving picture theater which will be opened on Main street, Troy, under the management of Messrs. Martin Folmar and W. T. Ogletree.

CALIFORNIA.

Plans have been prepared for a building to be erected at Fifth street and Ruth avenue, Los Angeles by Harry Gray, a portion of which will be occupied by a moving picture theater having a seating capacity of 250.

COLORADO.

Sterling is soon to have a third moving picture house. H. Fitzgerald has leased the property at present occupied by the Princess theater, which will soon move into its handsome new quarters in the Masonic Temple.

CONNECTICUT.

A new moving picture theater will be opened in Greenwich by Vasitis Nafpliotis, who formerly conducted a moving picture house in Oriskany Falls, N. Y.

FLORIDA.

The Imperial Amusement Company of Jacksonville has been incorporated with a capital stock of $25,000; president, G. E. Leonard; vice-president, N. W. Redmond; secretary, W. H. Dodge.

GEORGIA.

The Folly is the latest addition to Savannah's list of moving picture houses. It was recently opened on Broughton street, between Drayton and Abercoen by the Odeon Amusement Company which also operates the Odeon, one of the city's most popular houses. The house is well lighted and ventilated and has a seating capacity of 425. The program will consist of moving pictures, vaudeville and music, all of which will be first class.

Manager McLendon of the Grand Opera House, Carterville, announces that his house will run moving pictures on every night when not occupied by other attractions, at the admission price of five cents.

ILLINOIS.

A. E. Long, who established the Dreamland theater at Galena and successfully conducted the same for five years, has leased the Lyric theater at Platteville which will be thoroughly remodeled and improved and opened about April 1st as a high class moving picture and vaudeville house. The contemplated improvements will give Platteville as neat a little play house as can be found anywhere.

Messrs. Ben Henry and M. H. Marr will open a moving picture house at Gillespie.

McPherson Brothers of St. Louis will open a moving picture theater at Litchfield

The Yale Theater Company of Chicago has been incorporated for the purpose of operating moving picture and vaudeville theaters and to deal in picture films, etc. The capital stock is $2,500 and the incorporators are M. Viner, R. Berman and John Miller

The Orpheum moving picture theater, of Quincy, formerly owned and operated by M. C. McMahon, has been purchased by William Vance of Streator who will continue to operate the same.

The Gem is the name of a new moving picture theater opened at Herrin under the management of Louis Mario and Frank King. It has a seating capacity of 300.

IOWA.

The Palace, Fifteenth and Harrison streets, is a late addition to Davenport's list of moving picture houses.

James Michelstetter, Jr., proprietor of the Elite Theater of Davenport, is planning a number of improvements for his house.

INDIANA.

The Orpheum of South Bend claims the distinction of being the first theater in Indiana to use the daylight moving picture machine, which is the invention of R. H. Herbst of Freeland. Manager Charles J. Allardt pronounces the innovation a success.

The Habit is the name of a new moving picture theater recently opened on East Jefferson street, Tipton, by C. E. McNally. A season ticket was given as a prize to the one who suggested the name which was taken from lists sent in by a number of the contestants.

The Lyric is the name of the new moving picture theater to be opened in the Werner block, Goshen, by Messrs. Aubrey and McSherry, of Fort Wayne. The general effect of the theater will be colonial mission style, mosaic fittings, and the prevailing color will be white, all beautifully illuminated. The new house will be opened about March 20.

KANSAS.

The Scenic theater of Erie, which has been closed, will shortly be reopened by Will Bardeen and Mike Schmidt. Nothing but fireproof films will be used and every effort will be made to please its patrons.

The American Amusement Company will open a moving picture theater at Litchfield.

MICHIGAN.

The Family Theater of Hudson has been purchased by Will Shrum.

MINNESOTA.

The Cyriel is the name of a new moving picture theater recently opened at Sauk Rapids under the management of Cy Olson.

Out of a list of nearly 100 names received the name "Scenic" was chosen for the new moving picture theater recently opened at Detroit. The proprietors desired a name that would be suggestive of the nature of the place. The name chosen was sent in by Philip Stahl.

The Lyceum Theater of Thief River Falls has been acquired by Messrs. Henry Eide and Hans Angell, who will continue to operate the same.

MISSOURI.

The Goodwin Theater, of Hannibal, owned and operated by P. E. Goodwin, recently sustained a $1,800 loss by fire.

A new moving picture theater is being erected at the corner of Seventh and Quincy streets, Kansas City which will be the largest of its kind in the city.

NEBRASKA.

The Empire Theater of Nebraska City is planning to add high class vaudeville to its moving picture program.

The Rex Theater, the second moving picture house for Plattsmouth, was recently opened in that place. The opening night was most satisfactory to the management and the patrons were well pleased with the entertainment given.

Messrs. Willan and Stearns will open a moving picture theater at the corner of Fourteenth street and Indiana avenue, Havelock.

The Foss Theater of Sidney has been purchased by Mr. and Mrs. M. D. Tinsnan.

M. C. Westfall and W. J. Hendy, formerly of North Platte, have purchased the Gem and Crescent theaters of Kearney.

NEW JERSEY.

The Passaic moving picture theater, said to be the most attractive of its kind in that city, was recently opened at Passaic. No expense has been spared by the owners in fitting up their new house and as it is situated in an excellent locality it will doubtless be a success from the beginning.

NEW YORK.

The City Theater is the name of a new moving picture and vaudeville house which will be opened at Little Falls by Messrs. Reardon and Schultz, who formerly owned the Gem Theater of that city. The Gem has been purchased by Messrs. Fred Hatch and Harry E. Cary, who have had wide experience in the theatrical field.

A moving picture theater has been opened at Schuylerville by Messrs. Walsh and Kelleher.

The Brooklyn *Eagle* is authority for the statement that William H. Stone, J. Alexander Leggett and Isadore Finkler of Brooklyn have formed the Association Motion Picture Patents Company of New York City, with a capital stock of $1,000,000.

The Leonardo Show Company, Borough of Queens, has been incorporated for the purpose of conducting moving picture shows. Capital stock $3,000. The incorporators are Simon S. Feinstein, 352 Nassau street; Louis Victor, 73 East 116th street, New York City; and Samuel Arluck, 1282 Webster avenue, Bronx.

Plans are being prepared for a moving picture and vaudeville theater to be erected at Bushwick avenue, Flushing avenue and Debevoise street, Brooklyn, for the G. & M. Amusement Company, owners.

A moving picture theater has been opened in the Lake building, Cambridge.

Marcus Loew has leased the property at the northwest corner of Sixth avenue and 30th street, New York City, for a term of sixty-three years and will erect thereon a theater and office building at an estimated cost of $275,000. The theater will have a seating capacity of 2,300 and will be devoted to vaudeville and moving pictures.

The Equitable Amusement Company has been incorporated for the purpose of conducting moving picture, vaudeville and other theatrical attractions. The directors are as follows: Moses Silverman, Jacob Malbin and Rebecca Malbin, 380 Grand street, New York City.

Articles of incorporation have been filed for the Hudson River Motion Picture Company, of Brooklyn. The directors of the company are Justin S. Galland, Andrew Foulds, Jr., Adelbert W. Bailey, 25 Broad street, New York City.

The Napolin Amusement Company has been incorporated to conduct moving picture theaters and other places of amusement; capital stock $5,000. The directors are as follows: Morris Epstein, 366 Bushwick avenue; Jacob Napolin, 113 Ralph street. Brooklyn and Isaiah Freedman, 783 Broadway, Bayonne, N. J.

The Bijou Theater of Saranac, owned and operated by J. H. Farrington, will be replaced by a modern, up-to-date house which will be much larger than the old one. The new house will be located at 55 Broadway.

NORTH CAROLINA.

The Princess is the name of a handsome new moving picture house to be opened on West Trade street, Charlotte, in the near future, under the management of the Casino Theater. Not only will the new house be the largest in the city, but the prettiest and most thoroughly equipped.

A new moving picture theater will be erected at Elizabeth City by H. T. Greenleaf, Jr.

NORTH DAKOTA.

The Crescent is the name of a new moving picture theater opened at Williston on the sixth inst. It will be the policy of the house to give its patrons the best to be obtained in the moving picture line.

OHIO.

William Gordon, a well-known picture man, will erect a new moving picture theater at Third street and Broadway, Hamilton.

Manager Elberson, of the Majestic Theater, of Bucyrus, has arranged to give special matinees on Wednesdays and Saturdays, at which times special films will be given. At the Saturday matinee special souvenirs will be given to the children.

The Lyceum moving picture theater recently opened at Findlay is by far the most gorgeously finished theater of its kind in that part of the state, and by many it is pronounced to be unsurpassed in many of the larger cities. The front of the house is finished in old ivory, with huge arches surmounted by carved figures, the touching being in mahogany and gold. Plate glass has been used in the construction of the office, while mirrors are used in the entrances. The house has a seating capacity of 300, all of the seats being revolving opera chairs. The walls have been finished in delicate colors, hand decorated, and hung with a score of high powered lights. The managers are Messrs. Chapman and McKee.

Will McClelland, proprietor of the Star Theater at Fremont, has leased the Variety Theater of that city and will conduct the two places hereafter.

At a meeting of the directors of the Ohio Exhibitors' League, held at Marion, a movement was inaugurated to form a National League of Motion Picture Theater Owners. Among those present were President M. A. Neff, Vice-President W. A. Pittis, Conneaut; Treasurer C. O. Dupuis, Lima; Secretary C. C. Carter, Cincinnati, and Max Stearns, Columbus.

The Doan Amusement Company has secured permission to erect a theater on St. Clair avenue, near E. 105th street, Cleveland, at a cost of $10,000.

The Queen moving picture theater of Marion has been purchased by George B. Sayre, formerly of Clarksburg, West, Va., who has completely remodeled the house and has changed its name to the Royal. Mr. Sayre has been in the moving picture business for a number of years and proposes to conduct a first class house and give his patrons clean, high grade entertainment.

OREGON.

Permits have been issued for the construction of two concrete moving picture theaters in Portland. One is to be erected on East Sixty-seventh street, near Foster avenue, by H. E. Brouse, at a cost of $4,000. The other will be erected by M. F. Fenton on Grand avenue, between East Clay street and Hawthorne avenue, at a cost of $3,000.

The Dreamland Theater, a moving picture house, has been opened at Athena by Rawl Miller.

The Electric moving picture theater at Albany has been purchased by Messrs. A. G. Perry and I. G. Richardson, who will remodel the place and open it under the name of the Casino.

Messrs. Spens, Paulos and Dyer have been granted permission to erect a moving picture theater at 106 Sixth street, Portland.

A new moving picture theater will be erected at 1005 Belmont street, Portland, by L. H. Libby at a cost of $4,000.

PENNSYLVANIA.

A moving picture theater will be erected at Pittston by Nickolas Peloco, a well-know Italian resident of that city. The house, which will have a seating capacity of 500, will be constructed in the most modern and up-to-date manner. It will have an elevated floor and will be seated with opera chairs.

J. M. Lenny, of Harrisburg, will open a moving picture house at Allison Hill.

The Scenic Theater at Lancaster, formerly owned by W. A. Page, has been purchased by John B. Peoples.

Another picture house will be added to Harrisburg's long list of that kind of popular amusements. T. U. Zarker has been granted a permit to remodel the property at 1270 Market street for that purpose, at a cost of $2,000.

Owing to the great crowds that visit the Wizard Theater of York on Saturdays, Manager Deckman has decided to open his theater at 9 a. m. on that day.

The Lyric, of Pottsville, has been purchased by Charles Drummer.

The Pastime is the name of a new moving picture house to be opened at McKeesport.

The Parlor Motion Picture Theater, 437 Penn street, Reading, has been purchased by Emil Anderson.

The Lyric is a late addition to the amusement places of Scranton, having been opened on Susquehanna avenue by John L. Kilcullen and James A. O'Malley. The house, which will be devoted to vaudeville and moving pictures, is of the type found in the larger cities. The seating capacity is 400, and the proprietors have spared no expense in providing for the convenience and comfort of their patrons, making everything as homelike as possible.

The Moving Picture Palace being erected at East Greenville, will soon open its doors to the public of that place. It will be under the management of Walter R. Jaesus, formerly of Quakertown.

Application has been made for a charter for the Silverman Amusement Company, of Altoona. The capital stock is placed at $50,000, and Jacob Silverman and Isaac Silverman are secretary and treasurer, respectively. It is the purpose to establish a chain of theaters over the state, and plans are also being made to start an independent film manufacturing plant. Silverman Brothers are already quite extensively interested in amusement concerns, both in Altoona and other cities.

The Drury moving picture theater at Germantown has been purchased by Messrs. Conway and Cullen.

A moving picture theater has been opened in the Richland House Hall at Richland.

Plans have been prepared for an amusement hall to be erected at 1420 Point Breeze avenue, Philadelphia, by the Colonial Amusement Company. The cost will be about $15,000.

A moving picture parlor will be fitted up at the northeast corner of Fifth and Tioga streets, Philadelphia, by Samuel Morrison for Mary B. Hoffman, at a cost of $4,200.

Plans have been prepared for the Savoy, a handsome new moving picture theater to be erected at Carbondale by John Lewis, a well known theatrical man of Scranton. The house, which will have a seating capacity of 600, will have a frontage of thirty feet and will be 125 feet long. The front will be of marble, stucco and tile construction.

The property at 418 Walnut street, Harrisburg, which has been leased by A. Baturin, will be converted into a moving picture theater.

The moving picture theater at Himmelstown, formerly operated by Messrs. Hantz and Son, has been purchased by C. Ober, of Middletown.

SOUTH CAROLINA.

A new moving picture and vaudeville theater will be opened at Spartanburg by Lawrence Lester.

George S. Brantley, manager of the Pastime Amusement Company, of Charleston, announces that after the opening of the handsome new Victoria Theater in that city, in March, the Majestic Theater will be converted into a first-class moving picture house. As the capacity of the new theater will be about 1,200, the company did not deem it wise to keep the Majestic running as a vaudeville house. The Majestic will be the best moving picture theater in the city. Both Wonderland and the Theatorium will continue in operation after the Victoria opens, making three picture houses and one vaudeville house controlled by the Pastime company.

Messrs. Evarts and Ashanbaugh have recently opened the handsome, up-to-date moving picture theater erected by them at Beaver Falls.

Plans have been prepared for a moving picture theater to be erected on Main street, Carbondale, by John Lewis of that city. The front will be of marble, tile and stucco construction, and the estimated cost of the building is $6,000. The new theater will be known as the Savoy, and will have a seating capacity of 600.

Architect Harvey J. Blackwood, of Scranton, has prepared plans for a moving picture theater, to be erected at 308 Lackawanna avenue for Thenon & Company, of that city. The building will have a tile and marble front and will have a seating capacity of 300. It has a frontage of twenty-five feet on Lackawanna avenue and is 100 feet in depth.

The Opera House at Anderson has been leased by Messrs. Russell and Raymond who will conduct it as a moving picture theater.

SOUTH DAKOTA.

The Deadwood theater of Deadwood, will be devoted to moving pictures on nights when it is not otherwise occupied. This part of the entertainment will be under the management of Frank Smith.

TENNESSEE.

Capt. Ament, of Jackson, so well known in the moving picture and other amusement fields, has just completed a deal for the erection of a magnificent vaudeville theater at Jackson, Miss.

At a cost of nearly $100,000, a vaudeville house will be erected at Chattanooga by Fletch Catron and Will R. Albert. It is said ground will be broken in early spring and that the house will be ready for use by September 1. According to the plans announced by the management, the house will have a seating capacity of 1,600, and will combine all the latest styles, improvements and conveniences known to theatrical architecture.

TEXAS.

The Dells Crown is the rather euphonious name chosen by W. J. DeLamater for his handsome moving picture house recently opened at San Antonio. The house has a seating capacity of 300 and is provided with large, comfortable opera chairs. Mr. De Lamater has been doing a good business since its opening.

The Dixie is the name of another exclusive moving picture theater opened at the corner of Broad and Elm streets, Texarkana. One feature of this theater is that the curtain will be at the front and the picture machine at the back. Only pictures of high order will be shown and a first class place will be conducted.

A handsome new moving picture theater has been opened at San Antonio by Messrs. Leiber and Givins. The owners offered a prize of $5.00 to the one suggesting an acceptable name for this new house.

The Hempstead Opera House and Moving Picture Show is a recent addition to Hempstead's places of amusement.

VERMONT.

The Lyric, a moving picture theater of Brattleboro, has been purchased by Arthur Blood and Frank Main.

WASHINGTON.

A moving picture theater has been opened at Pasco under the management of Mr. and Mrs. H. G. Niese, formerly of Spokane.

WEST VIRGINIA.

Claude Nelson and Marshall P. Green are making arrangements to erect a moving picture theater at Fairmont that will have a seating capacity of 1,000.

The Dixie, having a seating capacity of 350, was recently opened at Grafton under the management of A. K. Belt.

Barth's opera house at Wheeling has been converted into a moving picture and vaudeville house.

The "Everette" is the name of an attractive moving picture house which recently opened its doors to the amusement loving residents of Bluefield. The house has a seating capacity of over 300 and is supplied with opera chairs. The color scheme is green and gold and the interior is decorated with a number of panels each containing a pleasing picture.

WISCONSIN.

The Model theater, 522 Tower avenue, Superior, has been purchased by Sam Roberg.

The Colonial theater of West Bend has been acquired by Messrs. Maxon and Day, who will conduct it under the name of the Princess.

M. J. R. Kelly of Harvard will open a moving picture theater in the White building in that city.

Messrs. Baldwin and Skate of Racine are planning for the erection of a moving picture theater in that place.

The Crystal theater of Dodgeville, formerly operated by D. M. Jones, has been purchased by Joseph J. Schmidt.

The moving picture theater at Hayward, formerly operated by Frank Felix, has been purchased by Ernst Brothers, who have greatly improved the same.

A vaudeville and moving picture theater will be erected at 212-214 Grand avenue, Milwaukee, by Otto Meister and others, a lease of twenty-five years having been secured on this site. The building will face Grand avenue and will extend to Second street.

Otto Meister and F. J. Ries have secured a twenty-five years' lease on the property at 214 Grand avenue, Milwaukee, on which they will erect a vaudeville and moving picture theater at a cost of $40,000.

Record of Current Films

Believing the classification of film pictures by the nature of their subjects to be of greater importance to the exhibitor than classification by maker, The Nickelodeon has adopted this style in listing current films. Exhibitors are urged to make use of this convenient tabulation in making up their programs. Films will be listed as long in advance of their release dates as possible. Film manufacturers are requested to send us their bulletins as early as possible. Reasonable care is used, and the publishers cannot be responsible for errors.

LICENSED

DRAMA

Date.	Title.	Maker.	Length.
2-6	Heart Beats of Long Ago	Biograph	997
2-7	The Doctor	Edison	1,000
2-7	The Deluge	Vitagraph	
2-7	The Strongest Tie	Gaumont	605
2-8	Little Sister	Kalem	970
2-8	Legally Dead	Pathé	1,000
2-8	On the Border of the Forest	Eclipse	895
2-9	Tony the Greaser	Melies	980
2-9	Thelma	Selig	1,000
2-10	The Missing Bride	Pathé	800
2-10	His First Commission	Edison	990
2-10	The Broken Trail	Kalem	1,000
2-10	The League of Mercy	Vitagraph	
2-11	Silver Leaf's Heart	Pathé	1,000
2-11	At the White Man's Door	Vitagraph	
2-11	The Bad Man's Downfall	Essanay	1,000
2-11	Napoleon in 1814	Gaumont	797
2-13	What Shall We Do with Our Old?	Biograph	994
2-13	A Show Girl's Stratagem	Lubin	1,000
2-13	The Survival of the Fittest	Selig	1,000
2-14	The Rajah	Edison	1,000
2-14	Consuming Love	Vitagraph	
2-15	Catherine Howard	Eclipse	1,005
2-15	Grandmother's War Story	Kalem	975
2-15	A Western Courtship	Pathé	734
2-16	Fisher Folks	Biograph	998
2-16	The Buccaneers	Selig	1,000
2-16	Billy and His Pal	Melies	980
2-17	A Stage Romance	Edison	
2-17	The Lost Ribbon	Kalem	1,000
2-17	When the Light Waned	Vitagraph	
2-17	A Boy's Wit	Pathé	462
2-18	Lieut. Scott's Narrow Escape	Pathé	1,000
2-18	The Cattleman's Daugher	Essanay	1,000
2-18	Saul and David	Gaumont	128
2-18	At the End of the Road	Gaumont	838
2-20	The Diamond Star	Biograph	996
2-20	The Padre	Selig	1,000
2-20	The Test	Lubin	1,000
2-20	A Soldier	Pathé	761
2-21	The Rival Sculptors	Edison	990
2-21	The Plot that Failed	Gaumont	815
2-21	A Tale of Two Cities—Part 1	Vitagraph	
2-22	The Open Road	Kalem	995
2-22	The Golden Sickle	Eclipse	882
2-23	His Daughter	Biograph	997
2-23	My Prairie Flower	Melies	980
2-23	The Seminole's Sacrifice	Selig	
2-24	The Price of Victory	Edison	1,000
2-24	Priscilla and the Pequot	Kalem	925
2-24	A Tale of Two Cities—Part 2	Vitagraph	
2-25	The Outlaw and the Child	Essanay	1,000
2-25	A Tale of Two Cities—Part 3	Vitagraph	
2-25	The Changeling	Pathé	1,000
2-25	Paganini and the Countess Beatrice	Gaumont	998
2-27	The Lily of the Tenements	Biograph	996
2-27	The Eye of Conscience	Selig	1,000
2-28	The Iron Master	Edison	
3-1	Sailor Jack's Reformation	Kalem	1,005
3-1	Comrades	Eclipse	638
3-2	The Heart of a Savage	Biograph	991
3-2	In the Hot Lands	Melies	980
3-2	The Outbreak	Selig	1,000
3-3	The Writing on the Blotter	Edison	
3-3	Mexican Filibusters	Kalem	1,005
3-3	Bertha's Mission	Vitagraph	
3-3	Satan Defeated	Pathé	750
3-4	On the Desert's Edge	Essanay	1,000
3-4	The Tramp's Find	Gaumont	680
3-4	Jealousy Foiled	Pathé	1,000
3-4	Mammy's Ghost	Vitagraph	
3-6	A Decree of Destiny	Biograph	995
3-6	Vanity and Its Cure	Lubin	1,000
3-6	The Little Shepherdess	Selig	700
3-7	The Little Drudge	Essanay	1,000
3-7	Love and the Stock Market	Edison	1,000
3-7	The Wild Cat Well	Vitagraph	
3-8	The Old Family Bible	Edison	300
3-8	Red Deer's Devotion	Pathé	1,000
3-8	The Fury of a Woman Scorned	Eclipse	720
3-9	Conscience	Biograph	995
3-9	The Medallion	Selig	1,000
3-9	The Snake in the Grass	Melies	980
3-10	How Bella Was Won	Edison	1,000
3-10	The Mission Carrier	Kalem	1,000
3-10	Undying Love	Pathé	720
3-11	His First Sweetheart	Gaumont	560
3-11	A Lonely Little Girl	Pathé	1,000
3-11	Red Eagle	Vitagraph	

COMEDY

Date.	Title.	Maker.	Length.
2-6	A Double Elopement	Lubin	990
2-6	Max Has the Boxing Fever	Pathé	561
2-6	Too Much Mother-in-Law	Selig	1,000
2-6	An Imitator of Blondin	Pathé	400
2-7	A Woman's Voice	Essanay	
2-7	Ten Words for Twenty-Five Cents	Essanay	
2-7	Jiggers' Moving Day	Gaumont	895
2-8	Two Valentines	Edison	1,000
2-9	Priscilla's Engagement Kiss	Biograph	997
2-9	The Petticoat Sheriff	Lubin	1,000
2-13	Betty's Apprenticesbip	Pathé	689
2-14	Getting Sister Married	Essanay	1,000
2-14	The Reformation of the Suffragettes	Gaumont	665
2-15	The Ransom of Red Chief	Edison	
2-16	Getting Even	Lubin	600
2-16	Schultz Has the Smallpox	Lubin	400
2-17	Whiffle's Double	Pathé	499
2-18	The New Stenographer	Vitagraph	
2-21	Their Wedding Gifts	Essanay	580
2-21	Just as the Clock Struck Nine	Essanay	412
2-22	Mr. Bumptious, Detective	Edison	990
2-22	Hubby's Troubles	Pathé	672
2-23	Dobbs, the Dauber	Lubin	1,000
2-24	Who Killed Max?	Pathé	689
2-24	An Escape of Gas	Pathé	302
2-27	Nan's Diplomacy	Lubin	1,000
2-27	Max Makes Music	Pathé	403
2-27	Pots, Pans and Poetry	Pathé	531
2-28	Taming a Tyrant	Essanay	1,000
2-28	Matrimonial Epidemic	Gaumont	813
2-28	Captain Barnacle's Courtship	Vitagraph	
3-1	Rival Candidates	Edison	
3-1	Oh, You Clubman!	Pathé	1,000
3-2	Father's Birthday Ring	Lubin	700
3-2	Woman's Curiosity	Lubin	300
3-4	Forbidden Cigarettes	Gaumont	335
3-6	Max Embarrassed	Pathé	600
3-6	An Oriental Abduction	Selig	300
3-7	The Barber's Daughter	Gaumont	505
3-7	The Ambitious Bootblack	Gaumont	450
3-8	A Night of Terror	Edison	700
3-8	The Irish Honeymoon	Kalem	950
3-10	The Bridegroom's Dilemma	Vitagraph	
3-11	The Romance on "Bar O"	Essanay	1,000

SCENIC

Date.	Title.	Maker.	Length.
2-10	Review of Chilean Troops	Pathé	180
2-11	Autumn Leaves	Gaumont	185
2-13	Pineapple Cannery in China	Pathé	315
2-14	Land Marks of Avignon	Gaumont	338
2-22	Felling a Smoke-Stack	Eclipse	113
2-22	Province of Laos, Indo-China	Pathé	321
3-1	Beauties of San Souci	Eclipse	362
3-3	Around Constantina, Algeria	Pathé	200
3-8	The Beautiful Wye Valley	Eclipse	300
3-11	The Beautiful Gorges of Tarn	Gaumont	415

INDUSTRIAL

Date.	Title.	Maker.	Length.
2-8	Canadian Iron Center, Port Arthur	Eclipse	110

SCIENTIFIC

Date.	Title.	Maker.	Length.
2-15	The Axolotl	Pathé	266
2-21	Pictures in Chemistry	Gaumont	175

SPORTS

Date.	Title.	Maker.	Length.
2-20	A Buffalo Hunt	Pathé	236
2-28	Lafont and Pola's Last Flight	Gaumont	185

DAILY LICENSED RELEASES.

MONDAY: Biograph, Lubin, Pathe, Selig.

TUESDAY: Edison, Essanay, Gaumont—Kleine, Vitagraph.

WEDNESDAY: Edison, Kalem, Eclipse—Kleine, Pathé.

THURSDAY: Biograph, Lubin, Melies, Selig.

FRIDAY: Edison, Kalem, Pathe, Vitagraph.

SATURDAY: Essanay, Gaumont—Kleine, Pathe, Vitagraph

INDEPENDENT

Date.	Title.	Maker.	Length.
	DRAMA.		
2-6	A Pittsburg Millionaire	American	985
2-6	Doctor Against His Will	Eclair	984
2-6	At the Duke's Command	Imp	1,000
2-6	Foiling the Camorra	Yankee	
2-7	The Half-Breed's Plan	Bison	900
2-8	Kelly, U. S. A.	Atlas	
2-8	The Transgressor	Nestor	
2-8	The Schoolma'am's Courage	Reliance	900
2-9	John Milton	Itala	900
2-10	Was She Justified?	Yankee	
2-10	The Norwood Necklace	Thanhouser	
2-10	The Salted Mine	Bison	900
2-10	The Orphan's Friend	Lux	711
2-11	Found Again	Great Northern	
2-11	The Angel of His Dream	Powers	
2-11	The Little Avenger	Reliance	900
2-13	The Elixir of Bravery	Eclair	424
2-13	Her Darkest Hour	Imp	1,000
2-13	Condemned to Death	Yankee	
2-14	For Her Sake	Thanhouser	
2-14	The Deputy's Honor	Bison	900
2-15	Coals of Fire	Atlas	
2-15	Three Men	Reliance	900
2-15	The Light Beyond	Nestor	1,000
2-15	The Demon	Ambrosio	900
2-16	In the Iand of Cactus	American	1,000
2-16	The Convert	Imp	1,000
2-16	A Heroine of '76	Rex	910
2-16	The Fatal Charm	Itala	900
2-17	Checkmate	Thanhouser	
2-17	Bronco Bill, the Brave Cowboy	Lux	639
2-17	The Warrior's Squaw	Bison	900
2-18	Under Southern Skies	Powers	
2-18	The Life of a Muschik	Great Northern	
2-18	Souls Courageous	Reliance	900
2-20	The College Spendthrift	American	900
2-20	The Heart of a Warrior	Eclair	683
2-20	Pictureland	Imp	1,000
2-20	A Lifetime Penance	Yankee	
2-21	For Washington	Thanhouser	
2-21	The Way of the Red Man	Bison	900
2-22	The Redeeming Angel	Ambrosio	500
2-22	The Old Man and Jim	Champion	950
2-22	A Plain Tale	Reliance	900
2-22	His Father's House	Nestor	1,000
2-23	Strategy	American	980
2-23	Artful Kate	Imp	1,000
2-23	The Story of a Prayer Rug	Rex	
2-23	Little Souls	Itala	900
2-24	The Fate of Joe Dorr	Bison	900
2-24	A Child's Prayer	Lux	534
2-24	Love's Test	Solax	
2-24	A Newsboy Hero	Thanhouser	
2-24	The Woman Who Dared	Yankee	
2-25	Across the Mexican Border	Powers	
2-25	Tangled Lines	Reliance	900
2-25	His Great Duty	Great Northern	
2-27	The Sheriff's Sweetheart	American	800
2-27	Punch	Eclair	595
2-27	All for Gold	Yankee	
2-27	A Manly Man	Imp	1,000
2-28	The Call of the Heart	Powers	950
2-28	The Little Mother	Thanhouser	
2-28	A Warrior's Faith	Bison	900
3-1	A Western Girl's Choice	Champion	950
3-1	The Trump Card	Reliance	900
3-1	The Professor's Romance	Nestor	990
3-1	The Trump Card	Reliance	900
3-2	College Chums	American	975
3-2	By the Light of the Moon	Rex	900
3-2	Nobility	Itala	900
3-3	Stage Struck	Thanhouser	
3-3	Owanee's Great Love	Bison	900
3-3	Jack's Lucky Horseshoe	Lux	530
3-4	Home Sweet Home	Powers	950
3-4	The Rival Servants	Great Northern	
3-6	Memories	American	375
3-6	King Phillip and the Templars	Eclair	975
3-6	Tracked	Imp	1,000
3-6	Angel of the Bowery	Lux	
3-7	The Mummy	Thanhouser	
3-8	In the Commissioned Ranks	Nestor	
3-8	A Trick of Fortune	Reliance	900
3-8	Out of the Arctic	Solax	
3-8	The Vindication of John	Champion	950
3-9	The Rich and the Poor	American	1,000
3-9	The Message in the Bottle	Imp	1,000
3-10	The Senorita's Sacrifice	Lux	
3-10	The Spirit Hand	Thanhouser	1,000
	COMEDY		
2-7	The Westerner and the Earl	Thanhouser	
2-7	Ferdie's New Shoes	Powers	
2-8	At Double Trouble Ranch	Champion	
2-8	Tweedledum as a Detective	Ambrosio	500
2-9	On the Installment Plan	American	560
2-9	Too Much Aunt	American	430
2-9	The Mirror	Imp.	500
2-9	When the Cat's Away	Imp.	500
2-10	Mixed Pets	Solax	
2-10	That Horse Did Run	Lux	272
2-11	Foolshead at the Kinematograph	Itala	900
2-13	A Quiet Evening at Home	American	1,000
2-13	Mr. Faddleaway is on Strike	Eclair	522
2-14	An Unforeseen Complication	Powers	
2-15	Her Three Proposals	Champion	950
2-17	Corinne in Dollyland	Solax	
2-17	Her Birthday Surprise	Yankee	
2-21	What Would You Do	Powers	
2-17	Matilda Lovestruck	Lux	272
2-18	Who Will Eat the Turkey	Itala	900
2-18	The False Alarm	Great Northern	
2-22	Tweedledum Is Shy	Ambrosio	500
2-24	Matilda Chased	Lux	354
2-25	Foolshead's Present	Itala	500
2-25	The Havana Cigar	Itala	500
2-27	The Silence System	American	200
2-27	Beware of the Bomb	Eclair	370
3-1	Tweedledum, Aviator	Ambrosio	900
3-2	The Dynamiters	Imp	500
3-3	A Costly Pledge	Solax	
3-3	The Abandon of Parson Jones	Yankee	
3-3	On Their Honeymoon	Lux	400
3-4	Coto and the Flag	Itala	500
3-4	Foolshead, More Than Usual	Itala	500
3-6	Hypnotizing a Hypnotist	American	615
3-7	When Masons Meet	Powers	
3-7	The Bandit's Surprise	Powers	
3-11	A Gamble With Love	Powers	
	SCENIC.		
2-8	The Savoy Cavalry	Ambrosio	500
2-11	A Trip Through Mexico	Powers	
2-20	Hospital for Small Animals	Eclair	286
2-21	The Mexican Centennial	Powers	
3-2	Army Maneuvers in Cuba	Imp	500

DAILY INDEPENDENT RELEASES

MONDAY: American, Eclair, Imp, Yankee.

TUESDAY: Bison, Powers, Thanhouser.

WEDNESDAY: Ambrosio, Champion, Nestor, Reliance, Solax.

THURSDAY: American, Imp, Itala.

FRIDAY: Bison, Lux, Solax, Thanhouser, Yankee.

SATURDAY: Gt. Northern, Itala, Powers, Reliance.

THE NICKELODEON

$2.00 Per Year | Published Weekly by ELECTRICITY MAGAZINE CORPORATION, Monadnock Building, Chicago | 10 Cents Per Copy

Vol. V | CHICAGO, MARCH 11, 1911 | No. 10

The Nickelodeon

Published Every Saturday by the

ELECTRICITY MAGAZINE CORPORATION

MONADNOCK BUILDING, CHICAGO

Long Distance Telephone: Harrison 3014

Ed J. Mock and Paul H. Woodruff, Editors James B. Crippen, Associate Editor

New York Office: 1433 Hartford Bldg., 41 Union Square
LAURENCE F. COOK, Eastern Representative
Telephone, Stuyvesant 1672

London Office: 36 Maiden Lane, Covent Garden
S. RENTELL & CO., Representatives

Table of Contents

TERMS OF SUBSCRIPTION

United States, Cuba and Mexico, $2.00 per year; Canada, $2.50 per year; Foreign countries within the Postal Union, $3.00 per year; Single Copy 10 cents.

Distributing Agents: The Western News Company and its International Branches.

NOTICE TO ADVERTISERS

Changes of advertising copy should reach the office of publication not less than five days in advance of date of issue. Regular date of issue, Saturday of each week. New advertisements will be accepted up to within three days of date of issue, but proof of such advertisement can not be shown.

NOTICE TO SUBSCRIBERS

Remittances should be made by check, New York draft or money order, in favor of THE NICKELODEON. Foreign subscriptions may be remitted directly by International Postal Money Order, or sent to our London office The old address should be given as well as the new, and notice should be received two weeks in advance of the desired change.

Scene from the American Feature Comedy, "The Harem Skirt."

THE NICKELODEON

AMERICA'S LEADING JOURNAL OF MOTOGRAPHY

VOL. V | CHICAGO, MARCH 11, 1911. | No. 10

AN OFFER TO ORGANIZERS.

FIVE weeks ago THE NICKELODEON published an editorial entitled "Again We Say, Organize!" In it we pointed out that the properly organized exhibitors' association would have the reins of the motion picture business in its own hands, so that each exhibitor could show the films he wanted to show, and dictate their quality as well as the methods of their supply. Some of the film manufacturers have taken exception to those statements, which only convinces us the more strongly of the importance of such organization among the managers of picture theaters. In this business the manufacturer, rather than the consumer, largely dictates the policy to be pursued in selecting film subjects, and those questions left open by the manufacturer are settled by the renter. The exhibitor lacks power simply by reason of his lack of organization, and it is naturally to the advantage of the manufacturer and renter to see that the exhibitor is kept in this state of impotence.

It is demand, and not supply, that builds an industry. When the consumer dictates to the producer we have progress and improvement. When the producer dictates to the consumer we have stagnation.

The strongest factor for improvement that could enter the motion picture field would be a competent exhibitors' association of national scope. Such an association should include without reserve both licensed and independent exhibitors, to preserve the proper proportion. For while the independent theaters in this country out-number the licensed theaters, the latter still include a large majority of the better class and more permanently established houses.

It is our sincere desire to see the formation of such an association consummated. We will even go so far as to take the initiative in opening the way to the formation of such a body. To this end we make the following offer:

We will furnish any exhibitor, who will supply satisfactory evidence of his sincerity of purpose, with a list of all the picture theaters in his state or group of states. Such lists will be furnished without cost to the organizer, the only condition being that he guarantee to use them for that purpose and for no other, and that he report to us his progress in the formation of local associations. And once the local associations are formed it will be a comparatively simple matter to combine them into one strong national body. Organizers, let us hear from you.

A DISASTROUS FIRE IN RUSSIA.

ASSOCIATED PRESS reports of March 6 tell a gruesome tale of death and injury in a disastrous picture theater fire at Bologoie, Russia. It is stated that ninety persons, many of whom were children, were burned to death and forty others were injured.

The flames started while the exhibition was in progress and quickly enveloped the building, cutting off every avenue of escape. Futile attempts at rescue were made by those who happened to be near the exits when the fire started and by those from the outside, but the fury of the flames drove them back before they could reach the victims, who in their efforts to get out of the building fought desperately among themselves.

Bologoie is a small place in the southern part of Novgorod province on the Nikolai railroad. Few of us have ever heard of it, and the chances that any of those who read these pages lost friends in the holocaust are small.

But the Bologoie disaster, nevertheless, is international, even from a selfish viewpoint. Fires of this sort, wherever located, have their effect on us through the published reports. It is quite likely that an appreciable loss of business results to picture theaters all over the world following such a catastrophe, although it is impossible to compute losses of this kind. And then the ever busy designer of new rules and regulations finds a splendid opportunity to gain support.

It is interesting to note a few comments on the subject of motography in Russia by Consul-General John H. Snodgrass, Moscow, as published in THE NICKELODEON of January 28, 1911. He says that the most insignificant towns and villages, even in remote districts, are well provided with these amusements, and new theaters are being opened daily in the provinces. In Moscow alone there are about eighty theaters and approximately the same number in St. Petersburg. Formerly 200 theaters were in existence, but during the past year the police authorities closed many places on account of complaints by building inspectors, and for various other reasons. These theaters were started in all kinds of rooms and buildings, wherever it was possible to secure a lease.

The theaters are now well distributed throughout Moscow, while before the thinning-out process an entire street would be lined with them. It is understood that on the Nevsky Prospect, St. Petersburg, there are thirteen, on the Grand Prospect eight, and on Garden street six. It is estimated that there are 1,200 electric theaters in the Russian Empire, and that the number of visitors aggregated last year 108,000,000. Many of the theaters are frequented by as many as 1,000 persons a night.

It is quite obvious that Russian picture theater audiences are not protected as are those of our own country. Because the picture theater ordinances of the city of Chicago are taken as a model by many other cities, we quote on this subject Mr. Robert Knight, deputy building commissioner in that city:

"In my opinion it is impossible to have such a fire horror in any Chicago moving picture theater. Patrons of local moving picture shows are even better

protected than those at the regular large play-houses.

"Even with the combustible films the danger is slight in Chicago. We have what have been considered model regulations that have been copied almost word for word by twenty other cities. Chicago has set the pace in looking after the moving picture theaters.

"Every picture machine must be modern and equipped with all safety appliances, including an automatic cutoff that throws a metal shield over the exposed portion of the film and cuts off the remainder both above and below. The machine and operator must be in a fireproof booth, with walls, floor and ceiling made of metal and asbestos. There must be a vent for the escape of any flames. After June 1 no moving picture show will be permitted in any frame building. This will drive thirty-one theaters out of business. The operator must be licensed. It is possible for him to be burned, but a fire can start in his compartment and burn itself out without communicating to any other part of the structure. Exits are required at both front and rear ends of the buildings.

"There are 450 moving picture theaters in Chicago and five men do nothing else but inspect them and see that they are living up to the requirements of the building department. They make monthly visits. We never allow moving picture machines to be operated in halls, churches or schools, and not even in the large theaters unless they are equipped with the fireproof both that I referred to. Stoves are not allowed in the buildings and smoking is prohibited. I believe that there have been three cases of films catching fire in Chicago five-cent theaters. In one case the operator was badly burned, but not in one of the three instances was it necessary, even though advisable, for the audience to leave the theaters."

And what is true for Chicago is true for practically all American cities. There never has been, and we are assured there never will be, a picture theater disaster in this country such as we occasionally hear of in some other parts of the world.

OUR NEW PUBLICATION.

As might have been expected, our announcement last week that The Nickelodeon as a weekly is to be succeeded by *Motography,* a monthly, occasioned much comment, practically all favorable to the change. In the last year the motion picture industry has experienced a remarkable transformation. Many of those who were first attracted to the field by its opportunities for quick money making, and who brought into it a host of unscrupulous practices, have been replaced by a more substantial and responsible class, who look only to a legitimate profit on their investment and to the building of a property of their own.

This class of exhibitors have always appreciated the work done by The Nickelodeon, and many of them have already expressed their approval of *Motography.* Even The Nickelodeon's enemies—for every enterprise that is at all aggressive makes some enemies—admit that it has always been the highest grade publication in the field. They may be interested to know that *Motography* will be even higher grade in that respect. Experience has taught us that the manufacturers' conception of the exhibitor is wrong. We know that the average motion picture exhibitor today is a shrewd, keen, intelligent business man, no matter what he was two years ago. He has made good money, and he has learned to invest it profitably and judiciously. In the process, those of him who were previously handicapped in the matters of education and training have naturally absorbed a certain amount of these perquisites. A comfortable income opens the doors of literature and art, and the drama in its best form the exhibitor has always with him. His very profession forces upon his eye the chief components of what we call "culture." In a word, nothing is too good for the present and future exhibitor; and in *Motography* we propose to give him his ideal of a technical journal.

It will give him information that he can find in no other place, and put him in touch with the larger activities of his chosen field in a way never attempted before. It will show him opportunities to expand his business and to remove it from the side-show class into the circle of dignified and praiseworthy enterprises.

As stated in our announcement, *Motography* will not be a "show" paper. The field is already overrun with those, good, bad and indifferent. It will be a technical paper, exploiting the uses of projection for the advancement of science, education, industry and art. That is field enough for as good a publication as ever issued.

THE GALLERY GOD EXTINCT.

The mission of the motion picture show has been discovered. The persons who first conceived the idea of entertaining audiences with nickel shows had a mercenary motive in doing it. But they were instrumental in causing the popularity of the "gallery" to decrease, so theatrical managers say.

And thus the departure of the one time famous "gallery god" is explained. His presence is not missed, for it was he who laughed at the wrong time, jerred when the play did not suit him and did things which made the patrons of the parquet and balcony blush for the reputation of their fair city.

It is seldom that many tickets are sold for the galleries. The sales have been so small that in many cities that section of the theater has been closed. It was not many years ago that crowds gathered at the gallery ticket office long before the window was opened for business. When the sales began there was a rush for seats. The result was that the "two-bit" theater goer, who was a few minutes late, was cheated out of a seat. That day of competition for front row seats in the "roost" is over.

And the nickel shows are responsible for it.

The crowd that usually infests a gallery is satisfied with "wild west" or other melodramatic productions. Motion pictures can portray these more vividly than the average actor. For this reason persons who used to fill the upper section of theaters now get their entertainment by going to nickel shows. There is the financial end of it, too. For the 25 cents that he one time paid to see his favorite show he now can see it and four others for the same amount of money.

The action in a motion picture show has an advantage over the theater, too. When the scene calls for "double quick" time it is in the power of the film operator to produce it. The more the crowd yells, the faster the characters work. Everything is to the advantage of the former "gallery god" at the nickel show, and that is the reason he has given up his old haunt for a new and more suitable one.—*Sioux City Journal.*

Features of the West Broadway Theater

By G. D. Crain

FEBRUARY 12 one of the largest motion picture houses in Louisville, Ky., opened under the auspices of the West Broadway Amusement Company at Eighteenth street and Broadway. The West Broadway Theater, as it is called, is not only one of the most capacious edifices of its kind in the Gateway City, but is also one of the handsomest and most completely equipped houses that could be planned.

Every modern feature of a picture theater has been installed and some peculiar conveniences, such as a "storage room" for babies or baby carriages, has been introduced, and stamp the new structure as one of the most up-to-the minute of its kind in the entire South. Besides the infants' reception room, the West Broadway contains full equipment of handsome toilets, which are seldom found in a theater of comparatively small dimension, and a novel ventilation feature is contained in the eleven big windows which admit a flood of light and air between shows and which are covered with pink and sea-green translucent panes, which do not permit enough light to enter to spoil the exhibitions during the times that the films are being reeled off.

The West Broadway is unique in conception and, after reaching the stage of blue-print embryo, simply grew and grew, a la Jack's famous bean-stalk, until it is now one of the premier suburban theaters of the South and would compare favorably with many houses in business sections that supposedly have more advantageous locations. The new Louisville play house, however, is not at all neglected from the standpoint of location, for it is in a populous residential district, with no other place of amusement within the radius of at least a mile. The neighborhood is mostly composed of middle-class folk, who enjoy picture shows in the extreme and it will be the policy of the West Broadway management to cater to the interests of this clientele in every possible manner, as some of the innovations that have been introduced indicate.

When the idea of establishing a theater in the West End first occurred to the present owners of the new house, it was planned to expend only $12,000 on the building. However, the investors waxed so enthusiastic over the bright future that extended for the palace of amusement that the West Broadway, now complete and shining, represents a total investment of more than $20,000. The West Broadway Amusement Company, owners of the new show-house, is composed of the following: Fred J. Dolle, president; Henry Reiss, vice-president and general manager; H. H. Goecke, secretary and treasurer.

The exterior of the West Broadway is one of the most beautiful that could be designed for an edifice of this type, and combines artistic detail with strength and impressiveness. A thirty-foot arch spans the entrance lobby, and the front and side walls of the house present a novel, glistening appearance as though they had just been scrubbed with soap and water. The reason for this spick-and-span appearance lies in the enameled brick construction that has been used on the exterior to lend an unusual aspect to the theater. The color scheme worked out in enamel is green and white and the art of the bricklayer is strongly exemplified in the artistic designs that have been wrought in these two colors.

Panoramic View of the Interior of the West Broadway Theater. Fred J. Dolle, Manager of the West Broadway.

The archway and various portions of the West Broadway's exterior are studded with electric lights, as is the custom in picture show ornamentation, but a new departure in external beauty has been attained through the use of five immense art glass globes which surmount the facade of the theater. Two of these globes are two feet in diameter, two others are three feet across and the center globe, which is the largest of its kind in Louisville, measures four feet in diameter. The immense balloon-like shades are internally illumined through the use of Tungsten clusters.

From afar the West Broadway stands out through the medium of a big electric sign that surmounts the entrance arch. The sign proclaims the name of the

theater with fiery distinctness for many squares, as the letters are five feet in height. The size of the sign's letters marks another distinctive feature of the new show-house, since but one other electric sign in the luminous district of Louisville contains letters the size of the West Broadway's proclaimer.

The lobby of the West Broadway enhances the impression of the observer as to the neatness and general attractiveness of the place. As the patron receives his first favorable impression from an exterior view. this idea rapidly waxes to the conviction stage when he sees preparations that have been made for his convenience. The day's offerings are attractively advertised on posters set in four panels in the lobby walls or upon easels disposed on the floor.

In view of the fact that the residential district surrounding the West Broadway is filled with workingmen's homes, where nurses, except parental ones, are not in vogue, arrangements have been made in the waiting room of the West Broadway whereby youngsters may be left in charge of a competent maid while their parents attend the shows. This feature is pronounced to be one of the strong points among the theater's accessories. In the event that the parents do not desire to leave their extremely young offspring in the waiting-room, it is proposed that all baby carriages and go-carts be accommodated in this apartment so that the child, if it may not particularly comprehend the meaning of the show, may at least revel in the society of its mater or pater. It is confidently predicted that the West Broadway's infantile department will be crowded to over-flowing during the summer, when tired parents wish well-earned respite from the heat and the whims of the little ones.

The floor of the West Broadway lobby is covered with marbleized fiber, this being the only product used in the construction of the house that did not come from Louisville. The new theater is strictly a "Made-in-Louisville" establishment, although the films and picture machines, of course, have come from foreign parts. The fiber floor covering admits of a marble-like surface with the properties of resiliency and noiselessness combined, which make it highly desirable for a theater entrance. Within the floors are covered with cork matting, such as is found in numerous picture houses.

Upon entering the West Broadway theater the observer is impressed at once with the thought, "This place is different from any that I have ever been in." A number of windows admit light and air into the building direct from the broad out-doors. This feature is noteworthy and is made possible because of the Broadway's suburban location in contrast to the cramped quarters which many down-town houses are forced to occupy. The walls of the auditorium spell cleanliness at first glance, for they are of plain, rough-finished concrete, without any attempt at gaudy, colored ornamentation, a feature which commends itself as being a traditional sight for sore eyes. Eight large translucent globes depend from the ceiling of the interior and furnish direct light from Tungsten clusters, augmented by light cast from a row of Tungsten wall-lamps that border the enclosure.

Upon leaving the theater auditorium one finds himself in a foyer of spacious dimensions, at each end of which is a well-appointed toilet-room. The toilets constitute another feature of the West Broadway theater and are seldom found in similar structures.

Particular attention has been paid by the West Broadway management to the absolute elimination of possibility of fire in the new structure. The operating-room, located at the rear building, is spacious and is separated from the auditorium by a solid concrete wall with only an aperture for the projection of the pictures. The entrance to the operating room is separate from the theater, and furnishings, such as film holders and racks in the apartment, are of fireproof construction. A big boiler room and a small power plant for the theater have been placed in separate fireproof buildings in the rear, electric power being furnished by one of the lighting companies in Louisville.

The stage of the West Broadway is remarkable for its size, as it measures twenty-seven feet in width beneath a sixteen-foot proscenium arch and extends to the rear for fifteen feet. Scenery suitable for almost any vaudeville act has been secured, as it is the purpose of the theater owners to run a mixed bill, combining about 4,000 feet of first-run films with three or four good vaudeville skits. An illuminated programme board at each side of the proscenium arch is used to announce coming events so that the necessity for programmes is abolished.

From the size of the West Broadway, which seats eight hundred people, it is evident that the eleven exists which have been installed are easily sufficient to take charge of any hasty getaways that might be induced among the audience. The exits open directly upon a wide alley and have proved of value already, inasmuch as the Board of Fire Underwriters has rated the West Broadway theater as one of the best protected houses of its kind in Louisville.

The shows at the West Broadway commence each day at 1:30 P. M. and run continuously until 10:30 P. M. The admission rate is ten cents, and it is planned to change the bill, consisting of 4,000 feet of film, an illustrated song and vaudeville skits, at least three times per week. A three-piece orchestra holds forth during the performances and sound effects will heighten the realistic impression. A brilliant future is predicted for Louisville's newest suburban picture house.

The Films Fooled Father

A man from Arena, N. Y., came to the city to visit his son. After dinner the son said to the father: "Dad, let's take in a good show."

The old man was on in a minute. He meant a regular show, not knowing that his son was addicted to the picture show habit. They dropped into one of the big theaters uptown which has been turned over to the films and took seats in the last row. Three reels had been run off, when the youngster turned to the old man. "How do you like it, dad?" he asked.

"Aw," said the old gentleman, "it's a good show, I reckon. But we're sitting so far back I can't hear the actors speak."

Tetrazzini Likes Motion Pictures

It is reported from Cleveland, Ohio, that Mme. Tetrazzini, the famous song-bird, on a recent visit to that city, spent a Sunday evening visiting the motion picture shows, of which she is very fond. Her appearance created a great sensation among the audience, who lost half the film story in their efforts to get a good look at Tetrazzini. The madam evinced her enjoyment by much musical laughter.

Scenic Pictures from New Sources

By L. D. Goodson

ALMOST exactly a year ago—in its issue of March 1, 1910, to be exact—The Nickelodeon printed an article entitled "The Railroad and the Camera Man," by Fred Bates Johnson. The tale dealt with the magnificent series of scenic pictures taken along the route of the Grand Trunk Pacific,

Camera Men at the Livingston Tree, Central Africa.

which runs through Canada from coast to coast, and the pictures were taken by Frank E. Butcher, a member of the firm of W. Butcher & Sons, Ltd., London.

This is by way of introduction to the announcement that Mr. Butcher is now setting out on a tour of far greater importance and covering a great deal more territory; the object being, as before, to secure as many thousand feet of interesting scenic motion pictures as possible. Mr. Butcher expects to be gone for fully two years and will visit South Africa, Australia, New Zealand, Japan, China, the Philippine Islands, Java, Siam, Straits Settlements, Burmah, etc.

According to the itinerary laid out by Mr. Butcher he is now in South Africa, as he expected to arrive at Cape Town about March 7. Fully three months will be spent in South Africa, going from Cape Town to Pretoria, Pietermaritzberg, Johannesburg, Bloemfontain, and other points farther inland.

From South Africa it is Mr. Butcher's intention to proceed to New South Wales, where he expects to put in about two months. The details of the Australian work have not yet been laid out, but assisted by the company's representative there it is probable that some excellent pictures will be taken in the Australian interior, that mysterious country of which so little is known beyond its well civilized border. From Australia Mr. Butcher will go to New Zealand. He expects to arrive there the later part of September, from whence he will proceed to the far east. The spring of 1912 will probably see him in Japan, and after spending a few weeks in that lively and interesting country he will go to China, the Philippine Islands, Java, Siam, Straits Settlements, and Burmah, returning to England by way of India or Canada early in 1913.

*Illustrations by courtesy of Charles Urban.

While it is true that Mr. Butcher has covered all of this country except South Africa before, he expects to secure many new and interesting subjects for the camera. Perhaps the most interesting part of the enterprise is that the exhibitors who delight in showing the Butcher subjects will not have to await his return before seeing samples. He is taking with him two complete outfits for taking the pictures and developing negatives and the latter will be returned to London from time to time as they are completed.

Mr. Butcher has had a long and thorough experience in handling scenic subjects and knows just what kind of pictures the people like. Armed with this knowledge there is no question that he will secure some views of extreme value and interest to the lovers of scenic and travel subjects. The value of scenic subjects is unquestionably increasing as the use of the motion picture in educational circles expands.

The motion picture industry advances with great rapidity and we have no doubt that by the time the two years of Mr. Butcher's tour are ended conditions will have so changed in the field that the demand for these particular subjects will be greatly augmented. There is hardly a town of any size in the land whose school board has not considered, whether seriously or not, the use of motion pictures in imparting instruction; and while there are already a number of scenic

Motographing a Water Baptism in the Congo State, Africa.

subjects on the market, little attempt has been made to classify them in such a way that a program made up exclusively of such subjects may be had on short notice.

So we welcome any addition to this particularly desirable classification of film subjects. Those who

witnessed the projection of the Canadian series which Mr. Butcher took, as related in the article mentioned in the first paragraph, will look forward with eagerness to the release of the new series, and we hope to present readers of The Nickelodeon with some information from time to time as to the progress of Mr. Butcher's work.

Experiments Showing Motography Principle

The following article recently appeared in the *Chicago Tribune,* under the title "Moving Picture Camera for Boys' Tools," by William B. Stout. We reprint it because the experiments described afford a neat demonstration of the principle of persistence of vision upon which the whole art of motography is built.

The motion picture machine that you hear and see working when you visit the picture show seems a complicated and marvelous affair to the mind of the average boy. However, I am going to show you how to make a picture machine for yourself that lacks all the complicated machinery of the big machine, yet a machine that will amply fill the needs of the average boy.

You do not need to be an artist to be able to draw the kind of pictures necessary for this machine, although an ability in the drawing line will be no drawback.

The pictures are arranged on strips of paper or cardboard about an inch and a half wide and four or five inches long, depicting a person in two different positions. The spacing of the figures I will explain later, and also tell more of their drawing.

The sight tubes are made up of paper or fairly stiff cardboard. The best way to do if making them of paper is to procure a strip of manila wrapping paper about nine inches wide and a foot or so long. Roll up one end, rolling toward the center until the tube which

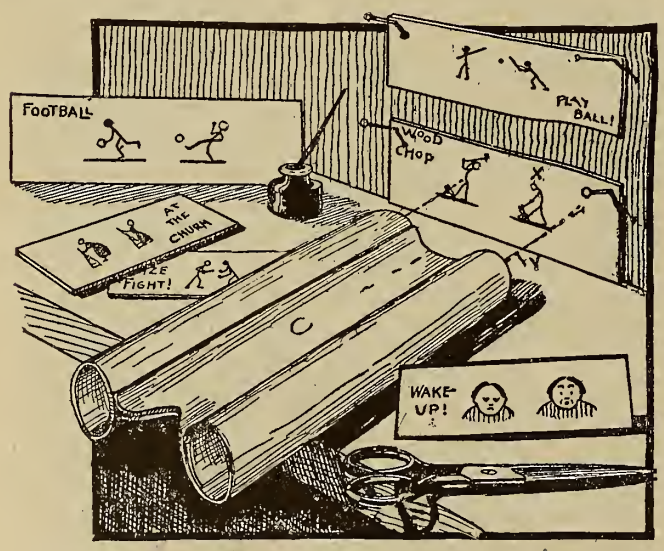

Fig. 1.

you roll up comes within a couple of inches of the center of the piece of paper. If you want to roll it accurately so as to get a perfectly round tube, cut a round stick about three-quarters of an inch in diameter and as long as the paper is wide (or nine inches), and roll the paper around it.

When near the center, as before described, smear some paste on the paper in front of the tube and stick the rolled part in its position.

When this is fastened, roll up the paper from the other side or end, rolling around the same stick, until you approach the first tube which you rolled.

This is pasted in similar manner, but at such a distance from the first tube that when you hold them up to your eyes you can see through the length of both tubes. In other words, the ends of the tubes must be as far apart as your eyes. Be careful to roll them parallel.

When this much is done, paste a stiff piece of cardboard on either side of the paper between the

Fig. 2.

tubes, as shown at C, in Fig. I. These pieces are merely to stiffen the construction.

We are now ready to draw and you can get an idea of the simplest way of making the pictures by looking at the drawings where figures are shown made up, some of them of nothing but straight lines, but which are just as comical in their antics when viewed through the tube as if drawn more elaborately.

If you wish, you can trace off on your cardboard strip some of the drawings I have shown separately, being careful, however, to space them correctly.

This one rule must be followed in making the pictures, and that is that the figures in the drawing must be drawn just half as far apart as are the two tubes which we have rolled, so that when you are looking through the tube at one of the pictures it will be impossible for you to see more than one of the figures at the same time.

For instance, in Fig. I, suppose you were looking through the tubes as they lay on the table. The man with the ax in the air is opposite the left hand tube so that your left eye can see this drawing as by the dotted line. The picture of the man with the ax down, however, as at X, is too far to the left to be seen with the right eye, and hence in looking through the tubes the only view you see is of the man with the ax raised.

If you suddenly shift the drawing to the right, holding it between your fingers, and shifting it just the right distance, the figure with the ax raised will pass to the right out of the view of the left eye, while the figure with the ax down will come to the view of the right eye as by the dotted line Y, so that as you move the paper back and forth in front of the tube, you see first the one figure and then the other.

After doing this for a while until you get used to the motion you will suddenly see the man move as he vigorously swings his ax up above his head and brings it down on the block in front of his foot, the motion being exceedingly lifelike.

There is no end to the number of drawings you can make for this set of sight tubes. In one drawing you see a baseball player hitting the ball; in another an enthusiast is kicking a football which flies away from his foot; others show a prize fight and a Dutch girl churning, while in the lower right hand corner of Fig. 1 a sleepy looking individual can be made to open her eyes wide and her mouth, too, for that matter, and then suddenly go to sleep again in quick succession.

New Amusement Patents

By David S. Hulfish

No. 971,889. Picture Film Cleaner and Stencil. Gustav E. Hoglund, Chicago, Ill., assignor to Selig Polyscope Company, of same place. This patent refers to the preparation of the raw film stock for the printing machine, or for the camera.

In the preparation of moving picture films, it is necessary to remove, from the emulsion side of the film, all particles of dust or the like prior to exposure of the film, in order that in taking the picture such particles may not interfere with the exposure and cause marks or specks on the surface of the film. Such marks, if present, will destroy the beauty of the picture, when enlarged, by its projection on the screen, so that it is highly desirable that the surface of the film be entirely free from such particles when exposed. It is also desirable and necessary to imprint on the film, by protographic means, words or marks, in the nature of trade marks or descriptive marks, indicating the name of the maker of the film or other information of a like nature.

The object of the present invention is to provide means for removing the dust from the film, and immediately thereafter

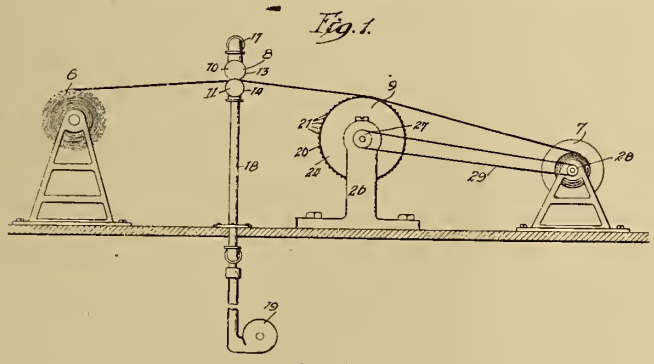

971,889.

applying such identifying marks to the film, by protographic means.

In the drawing, Fig. 1 is a diagrammatic view, showing the apparatus as a whole; Fig. 2 a sectional elevation of the sprocket drum and stencil drum; Fig. 3 a cross sectional view of the two drums; Fig. 4 a front elevation of the sucker heads, for removing dust particles; and Fig. 5 a cross sectional detail of the same.

The apparatus as a whole comprises a delivering reel 6, a receiving reel 7, suction devices 8, and printing devices 9. The suction devices are in the form of upper and lower sucker heads 10 and 11, respectively, each of which is provided, in its acting face, with a slot 12, the two slots being in register with one another to act upon the upper and lower faces of the film. The upper sucker head is preferably of somewhat smaller size than the lower sucker head, and is provided, at each end, with a flange 13, which flanges interlie a pair of flanges 14 at the ends of the lower sucker head, leaving a space 15 intermediate the two sucker heads for the passage of the film. The sucker heads are preferably of rounded or cylindrical formation, on their acting faces, and the slots 12 are located at the most closely convergent points on the respective sucker heads. The two sucker heads are connected with a suction header pipe 16, by means of upper and lower pipe connections 17 and 18, respectively, and the header pipe connects with a suitable exhausting apparatus 19, such as a fan, pump or the like.

The printing apparatus, which is located adjacent to and immediately beyond the sucker heads, comprises a sprocket drum 20, provided, around its periphery, with rows of sprocket teeth 21 adapted to engage with the usual holes along the edges of the film, and immediately outside of and adjacent to the sprocket teeth the drum is provided with a ring or rings of holes 22, each of which is adapted to have applied thereto a very small stencil plate 23 having a suit-

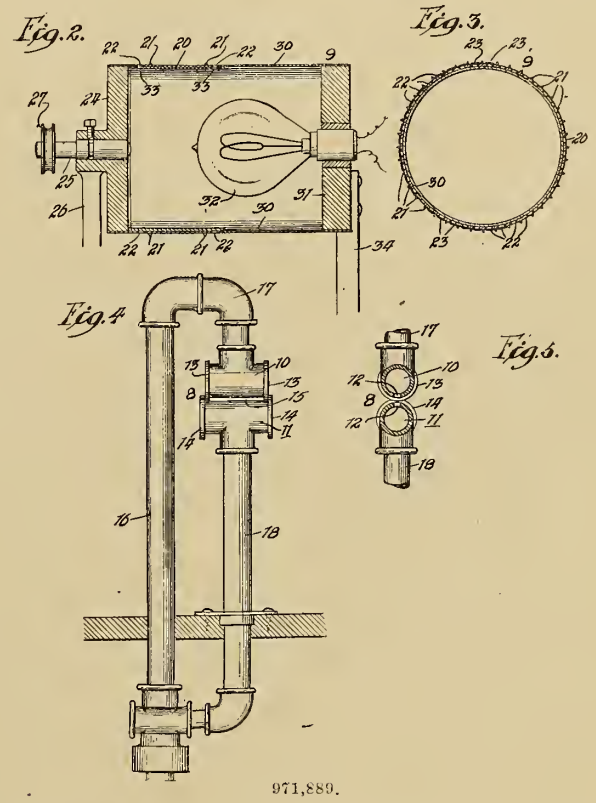

971,889.

able letter, figure or other designating character cut therein. The sprocket drum, at one end, is provided with a drum head 24 which is secured to a shaft 25 journaled in an upright 26, which shaft is preferably provided with a pulley 27 which co-operates with a pulley 28 on the shaft of the receiving drum 7, so that the sprocket drum and the receiving drum may be rotated in unison and at the proper rate of speed by means of a belt 29, which affords sufficient slippage to compensate for the increasing diameter of the coil of film as it is rolled up on the receiving roll. Obviously, other means might be provided for operating these devices. The sprocket drum co-operates with a light cylinder 30, one end of which is closed by means of an end wall 31 which affords a mounting for an electric light 32. The other end of the light cylinder is open and is inserted in the open end of the sprocket drum which closely surrounds the light cylinder. The wall of the light cylinder, at a suitable point, is provided with a pair of exposure holes 33, one for each row of stencil holes with which the individual stencils are adapted to be successively brought into register. The light cylinder is supported in stationary position by means of an upright 34.

In preparing the film, the end will be passed between the upper and lower sucker heads, and will be passed over the surface of the sprocket drum and connected with the receiving drum. Thereafter, the suction apparatus can be operated and the electric light turned on and the film fed forward at the speed desired. The action of the suction through the sucker heads will serve to remove dust or small particles of dirt from the film, and the film, in clean condition, will then be passed over the sprocket wheel, and the stencils carried thereby brought successively into register with the exposure holes so that the light from within the cylinder will successively shine through the stencils and photographically imprint the desired mark, letter or character on the sensitized surface of the film. By having the stencil holes in rows, it will be possible to photographically print complete words or phrases along the margins of the film, so that, when the film is developed, the words or phrases will appear and be permanently and indelibly applied to the film.

No. 971,890. Process for producing colored films for motion pictures. Gustav E. Hoglund, Chicago, Ill., assignor to Selig Polyscope Company, of same place.

Hand colored films are well known, and it may be said also that stenciled films are well known, a stenciled film being a "machine colored" film in imitation of the "hand colored" film. In the usual stenciled film, each of the images of the film strip is colored; in the invention of this patent, persistence of vision is taken into account to reduce the labor of coloring by stencil, and only every second or third or even fourth picture of the stripe is colored. The process as a whole then is simplified by using a single stencil strip, cutting the first image as a stencil for one color, cutting the next image as a stencil for a second color, cutting the next image as a stencil for a third color (if three colors are to be stenciled on), and cutting the next image as a repeat stencil for the first color. The result is a resemblance to the fully stenciled film, with perhaps a loss of brilliancy in the coloring owing to the smaller amount of stain in the film as a whole, although the translucency of the film as a whole will be greater because of the omission of each color of stain from two-thirds of the pictures. The description of the drawings, and the claims, are given below in the language of the patent:

In the drawings, Fig. 1 is a face view of a film completely colored; Fig. 2 a view of the stencil employed in coloring the film and Fig. 3 a face view of a tinted film with the coloring applied thereto.

As shown in the drawings, the film 3 is divided into series of three pictures, as indicated by the numerals 3, 4 and 5, each of the pictures of the series having a portion of its surface colored.

As indicated in picture 3, a portion 6 is colored green; in picture 4 a portion 7 is colored blue; and in picture 5 a portion 8 is colored red. This same order of coloring is followed throughout the entire set of pictures. We will assume, for the purposes of illustration, that in this particular picture there is a red house, a blue sky, and green trees. On every third picture the green trees will be colored, and on the other two the trees will appear in the ordinary black of the film, the same statement applying to the blue sky and red house. When the pictures are projected rapidly upon the screen, the colors will blend, producing, by the same optical delusion which is manifest in moving pictures, the effect to the eye of a completely colored picture. I have also discovered that, by tinting the film, certain colors will become opaque thereon, causing them to stand out prominently, so that when the background of the film is tinted it becomes necessary to color only two of the three pictures in the series, the third picture receiving its coloring through the tint in the film.

Referring to Fig. 2, there is shown a stencil for use in preparing the colored film. This is produced by taking a positive film from the negative in the manner ordinarily employed. From this positive film certain portions of each picture are cut out. The stencil is then superimposed upon the film to be colored and coloring matter applied to the portions of the film which are exposed. In case a tinted film is used, portions are cut out from only two of the three pictures in the series, some portion of every third picture being rendered dark by the tint and standing out from the rest of the film. The above process is described for the purpose of showing one way in which this result can be accomplished. There are, however, numerous old and well known methods by which this coloring can be done.

In Fig. 3 of the drawings is shown a film in which a green tint is used as a background for the entire picture. Therefore, the portions of the landscape which are green will be of pronounced coloring upon the film; that is, they will stand out more prominently than the rest of the picture in which other colors are employed. The film of Fig. 3 shows a portion of 9, which is produced from an object having a green coloring, a portion 10 from an object having a blue coloring, and a portion 11 from an object having a red coloring. The green color scheme will, of course, be manifest throughout the picture, but by coloring a certain portion blue in every other picture, and a certain portion red in every other picture, making a consecutive

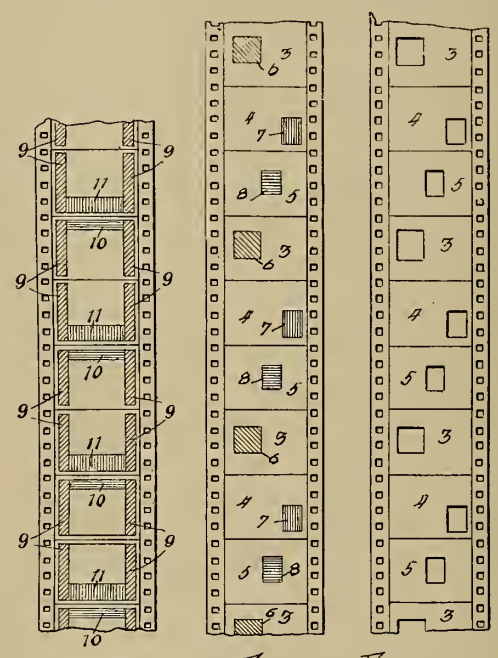

971,890.

series of pictures, the first of which would be in blue and green, the second in red and green, and so on down the film one is enabled to produce a completed picture having the red, blue and green colors thereon.

1. The process of coloring animated picture films, which consists of dividing a film into series containing a selecteed number of pictures, cutting out a selected image from each picture, each corresponding picture of the series of pictures having a like image cut out therefrom, superimposing the stencil thus formed over a duplicate film of that from which the stencil was made, said latter film having a tinted background, and applying selected coloring matter to each exposed part of the film lying below the stencil, thereby producing a film having a general color for a background, each picture having an image thereon of a color distinct from the background, the colors blending when the pictures are projected to produce a completely colored picture, substantially as described.

2. The process of coloring animated picture films, which consists in dividing a film into series containing a selected number of pictures, cutting out a like image from each corresponding picture of the series of pictures, superimposing the stencil thus formed over a duplicate film of that from which the stencil was made, and applying selected coloring matter to each exposed part of the film lying beneath the stencil, thus producing a series of pictures, each containing a selected number of pictures, each corresponding picture of the series of pictures having the corresponding image therein of the same color, the colored images of the different pictures blending when the pictures are projected to produce a completely colored picture, substantially as described.

How Moving Pictures Stimulate Sales

By Watterson R. Rothacker*

ILLUSTRATION has an established place in advertising and moving pictures are one of the most comprehensive and powerful means of illustration at present available.

Education by cinematograph is advocated by savants and scientists all over the civilized globe by reason of the fact that the flora and fauna of a country—the customs and habits of a people—the natural characteristics and resources of a land—the appearance and life of beasts, fowl, fish and insects can be registered on film in a manner which makes them matters of reliable record.

Now as to the value of moving pictures as an advertising medium: This value manifestly exists and the opportunities to realize on it are actual as well as prospective. While this is absolutely true, also is it true that while progressive advertising experts have given, and are giving, a careful consideration to the possibilities of moving pictures in the advertising field, the very newness of this application of animated photography limits the supply of actual examples of what has been done in this regard.

That is to say, there are not innumerable moving pictures in existence which have been manufactured with the preconceived purpose of advertising. On the other hand there have been hundreds of subjects displayed before the public which have advertised that which they have depicted, and many of these have been used to gain publicity. These are the so-called industrial and travel films which show interesting agricultural and factory activities and disclose vistas of attractive cities, sections, pleasure resorts, etc.

One of the notable examples of successful moving picture advertising is that at present employed by the International Harvester Company.† This great concern operates a lecture-entertainment with colored views and motion pictures. This entertainment was conceived and inaugurated by Mr. M. R. D. Owings, whose reputation as an advertising man has extended from coast to coast and even over "the pond." This entertainment travels all over the country under the direction and guidance of a capable lecturer, George Frederick Wheeler by name. The moving pictures utilized by the International Harvester Company and so ably described by Mr. Wheeler, illustrate "The Romance of the Reaper." This lecture-entertainment delineates and emphasizes the value of the reaper and portrays the part these modern machines are playing in the development of agriculture. This is done in a manner which gives an ocular demonstration of the product of the International Harvester Company, identifies the name of this advertiser and causes it to stick in the memory of people who are, or ultimately will be, buyers.

"The Romance of the Reaper" has attracted a lot of attention among the class of people who are buyers or prospective buyers of farm implements. The lectures illustrated as they are, have an edifying interest to all those who have visited them, and they have exerted an educating influence which has also acted as an advertising force.

The Pacific Coast Borax Company deserves to be called a pioneer in the use of moving picture advertising.* The company has an interesting story to tell about the manner in which its product was secured for the market. Its assertions in this regard were such as *would stand for pictorial proof.* Mr. D. F. Tillisch, of the Pacific Coast Borax Company, saw in moving pictures an opportunity to show the public interesting things about borax in a form which would cause the Twenty-Mule Team brand to be remembered in connection with the scenes displayed. Mr. Tillisch backed up his opinions with action, with the result that the moving picture campaign which ensued reached an immense number of people, and every person who saw the borax pictures enjoyed them and received an advertising message which convinced them of the superiority of the Twenty-Mule Team kind. Mr. Tillisch only the other day made the statement to me that the moving pictures not only gave his company great advertising benefits but gave a telling impetus to its sales.

Take for instance the travel lectures which have been given us by Stoddard, Elmendorf, Holmes and other artists in this line. While arousing interest they created a desire on your part to see the original of the places which were so enticingly described by the pictures.

Advertising a city is to describe its business, the topography of its location, the beauties and comforts of its home sections, its transportation facilities, social advantages, etc., in a manner which will present them as the exemplification of Opportunity. Moving pictures display this "copy" so that it is convincing and above all attractive to the prospective tourist, resident and investor, who are inspired with confidence instigated by the knowledge of the reliability of moving pictures and their power to faithfully reproduce.

Mr. W. H. Simpson, advertising manager for the Atchison, Topeka and Santa Fe Railway system,† stated recently in *Judicious Advertising* that: "We keep several lecturers in the field and loan slides to a hundred more. There's nothing so profitable, for the money invested, as an illustrated travel talk."

At the Land Show recently held at the Coliseum, Chicago, the lecture hall was one of the most popular spots in the big building. There the inquiring public could actually see the districts which grew the fine fruit, grain and vegetables which were in inanimate evidence at the various exhibits. Show a man a busy harvest scene, a vista of industrial prosperity, the advantages of a community or territory and you sow seeds which, when cultivated, will bear fruit in the shape of new residents and capital invested.

An enterprising manufacturer of golf balls secured a wealth of publicity by exhibiting in different parts of the country a series of moving pictures which showed well known golf experts actually playing the game.‡ The golf enthusiast who viewed these pictures

*Judicious Advertising.
†The Nickelodeon, February, 1909.

*The Nickelodeon, January, 1909.
†The Nickelodeon, September, 1909.
‡The Nickelodeon, January 15, 1910.

was able to study the scientific strokes made during the play by high-class professionals, and at the same time was impressed with the name of the manufacturer who gave him this opportunity; and the fact that this certain make of golf ball was used by men whose selection in itself was a recommendation carried weight. The B. F. Goodrich Company did this, and to advertise its make of automobile tires it also put before the public moving pictures of exciting automobile races which afforded entertainment while implying advertising in favor of the brand of tires.

To arrange a moving picture play which is to convey an advertising story visible through a softening veil of entertainment, it is necessary that the producer take great care that he does not sacrifice the advertising feature for a dramatic effect.

Moving pictures encourage the use of other advertising. A campaign for publicity waged with moving pictures stimulates the advertiser's entire system and urges his use of newspapers, magazines and the other established means.

For he must announce in advance the opportunities he is to disclose in moving pictures, and current and after-comment is made through various channels to hammer home the facts which have been illustrated and to nourish the mind which has been impressed with the message telegraphed to it from the eye.

"Nickel Actors" in the Making

Bill Kelly was a bricklayer and was as proud of his trade as he was of the Irish blood and wit which tingled through his veins. He was 20 and full of life, and was the idol of the girls for blocks around. According to all the "symptoms," therefore. Bill Kelly should have gotten married and should have settled down ta the staid and sober life of the comfortable mechanic. If he had ambition that ambition naturally should have been directed toward getting away up the ladder in his union, toward becoming its business agent and even president.

If the symptoms were to hold good Bill Kelly should have retired from service at the age of 60 as the owner of a comfortable little house, somewhere east of the stockyards, and of a half a dozen healthy and hard-working children.

But symptoms do not always hold good, and Bill Kelly, instead of being a bricklayer, married, and with a definite future before him, is a vaudeville artist, as he calls himself, an "actor in nickel theaters," as others call him. As for his future—well, Bill is dreaming of all kinds of futures, of applause and bouquets and a salary of $400 or $500 a week. The strange thing about the situation is that it all came about so suddenly and unexpectedly that neither Bill nor his relatives have gotten over it yet. It happened this way:

A five-cent theater opened up across the street from the saloon where Bill Kelly went in every evening for his glass of beer and for a chat with the fellows. Bill, who had been a regular patron of the varieties, sneered at first at this "imitation" of a theater. Then, to become convinced that he was in the right in not thinking anything of "The Dazzler," he decided to pay it a visit. He was thoroughly disgusted with the performance and to his friends on either side he confided contemptuously that he could do the stunt much better than the actor did it. Just then the manager announced that there would be an "amateur night" and that he would be glad to "put on" any one the audience might desire. A week later Bill was on teh stage. A three minutes' monologue and pantomime won for him rounds of applause the like of which the little playhouse had never seen.

That was the end of Bill Kelly, the bricklayer. Today he is "Bob Loomis, the Irish comedian."

The story of Bill is the story of many if not most of the 800 or more actors who play in the five and ten-cent theaters in Chicago. The great majority of them came from the trades. The youth who wins applause in a South State street theater by impersonating the "country Rube" has never seen a real country Reuben in all his life. He received his education for the stage in a basement on the great West Side, where he worked as a barker. The actor who wins tumultuous applause as a "Jewish cowboy" in the Ghetto is a graduate from the printers' union.

The girl actor in the five-cent theater is likewise drawn from the shop and the factory. As a class the "actresses" are far better educated than the men are. Education, refinement, and the ability to pose as "clever" are some of the things which are frequently required from girl actors. A liberal education, the ability to play some musical instrument are the things which aid the girl actor greatly. But these, like the men, if they are ambitious to get beyond the five-cent theater stage and audience, have a good deal of work catching up, educationally, socially, and otherwise.

The majority of actors in the five and ten-cent theaters are married people, and are married "in the profession"—that is to say, their wives are on the stage, also. And the homes they have are simple, and as far from bohemianism as the poles are apart.

However, while the majority of actors, or "talent," as they would rather have it, come en route of amateur nights, there are a considerable number of men and women acting in the five-cent vaudeville houses who have achieved success in the vaudeville world generally. The five-cent theater with many a good comedian is a sort of a means to an end. He uses it to tide over hard times.

Thus many a good actor, or a troupe of actors who are negotiating with a Chicago vaudeville house, but who cannot come to terms on the salary, will go to work in the five-cent theater under an assumed name to earn expenses during the week or so in which they carry on negotiations or are waiting their turn.

The five-cent theater is now and then also a haven for the aged actor who is tired of the road and of the traveling life, and who finds this a convenient way to earn a living and have a permanent home at the same time.

Last but not least there are a number of college graduates in the ranks of five-cent theater actors, and they are not among the worst of the "profession," either. With them the five-cent theater is either a means of making some extra money or else it is only a stepping stone to higher theatrical work.—Chicago *Tribune*.

Michigan Fight Film Bill

The Bricker bill, prohibiting the display of moving pictures or other pictures of prize fights, came out of the committee on state affairs after a long period of discussion in the committee room on February 25. The committee was not favorably impressed with the bill. It reported it with the recommendation that it be not passed.

Some Questions Answered

By William T. Braun

In this department, answers will be given to questions upon any subject in connection with the conduct of moving picture exhibitions, the operation or construction of moving picture machines, the making of pictures or films, or any questions pertaining to the amusement business which can be answered without specific reference to any person or company. Questions are invited, and will be answered as promptly and as fully as possible.

SAFETY DEVICES.

I would like to ask your advice in regard to some of the safety devices on projecting machines. In the town where our theater is located the law does not require an automatic fire shutter or a take-up attachment. We have none of these on our old machine but I am going to buy a new one. Would you advise me to buy a machine with these devices on?—Theater Manager, Okla.

I TAKE your question to be whether the automatic fire shutter and take-up are worth the extra price that is charged for the machine when it is equipped with them. Although they have nothing to do with getting a better picture, they are certainly worth the extra cost in more ways than one. If you understood how the apparatus works, you would probably appreciate them more fully.

Automatic fire shutters which are attached to the front of the film gate work under either one of two principles. When the speed of the crank reaches a certain amount, a lever attached to the crank is forced inward and the shutter is raised allowing the light to enter the aperture.

The other and now more universally used device depends also upon the speed at which the machine is operated; and the mechanism consists of a centrifugal governor or clutch and a lifting lever, controlled by the governor and connected to the shutter. On some machines this governor is mounted on a spindle geared to the film feeding device, the spindle being rotated at a corresponding speed according to the gear ratio. With this style, when the travel of the film reaches the proper speed at which the machine should be run, the governor or clutch operates and moves the lever so as to raise the shutter or push it to one side, as the case may be. The shutter may either be hinged to the top of the gate or pivoted at one corner.

As stated above, the machine must travel at a certain speed before the shutter opens, and should the crank accidentally come off; the operator stop the machine for some reason and not move the light out of the way; or if the machine is run at a very low rate of speed; the shutter will close by gravity, thus shutting off the light and protecting the film from catching fire. This then is the protection offered by the automatic fire shutter, but it fails to protect the film in one respect.

If some of the sprocket holes of the film are torn out and this part of the film passes through the top feed sprocket, but is not pulled down by the intermittent sprocket, the film will remain stationary in front of the light. The shutter will remain open because the crank is still being turned and the film instead of passing through the machine passes over in front of the film guards directly into the rays of the light. It will be but a moment then before a fire will be on. Of course an operator will certainly be paying very little, if any, attention whatever to the machine if he does not see the film climbing over the guards; or even if he is looking at the screen he can see that the picture is absolutely still, and a second's thought will tell him something is the matter. Considering everything, the automatic shutter is a very good thing; it no doubt has prevented many fires and is certainly worth the extra amount charged.

Most lamphouses are equipped with a light shutter or dowser either directly in front of the lens or the cone to cut off the light in case of accident or when the light is not required. If you have a careful operator who is "automatic" in his action, he will "dowse" the light at the first sign of danger and save no end of trouble.

In regard to the take-up attachment: If you do not use one, you probably will use a galvanized iron tank. While these are allowed even in some of the large cities if equipped with fire rollers, I would not recommend their use. When the film enters the tank it piles up loosely and the rewinding must be done slowly and carefully, otherwise you may rip the film on the side of the tank. Also the film snarls up very easily and you will have to stop and untangle it.

Again, if you are using a tank you must rewind on the machine—that is, the film will have to be rewound on the upper reel. This takes considerable time and you cannot start a new reel until the first one is rewound, unless you run both into the tank and rewind during the intermission.

When a take-up is used, the film as it leaves the upper reel is wound on a lower one inside of a fireproof magazine. When the reel is finished, all that is necessary is to remove the lower reel and place the second one in the upper magazine and another empty one in the lower magazine, and go on with the show. The first reel may be rewound while running the second one or during the intermission.

If the film is enclosed in a lower magazine equipped with fire rollers it is next to impossible for the fire to enter the magazine. But if you use a tank with a hole about two by four inches in it through which the film enters, and should the film catch fire, the flame could very easily enter the tank.

SIZE OF FLAP TO USE IN PATCHING FILMS.

When you patch a film is it best to make a flap of one or two sprocket holes wide? An operator aquaintance of mine uses half of a picture for the flap and claims that this is the only way he can get a patch to hold.—J. T. R.

YOUR friend is wrong, because a patch using a flap of one sprocket hole, while smaller, will make a better patch than when using half a picture for the following reasons: It stands to reason where the patch is made the film, being doubled, will not be as pliable as the single film. For this reason a small patch will pass over the sprocket easier than a large one, while a large one will make the film so stiff that it might jump off of the sprocket. The patch can be made plenty secure if after patching the edges are securely cemented down.

The reason your friend uses such a large flap is because he does not cement the edges as well as the middle. A patch with a large flap is more liable to come open than a small one, because when passing

over the sprockets the patch is liable to split open in the middle or the edges raise up. These edges catch in the sprockets and rip open, causing no end of trouble.

Last and not least, if you will examine the splices made at the film exchanges, you will see that they use no larger a flap than one sprocket hole, but the edges are securely cemented down. While their patches are not always the best, they can be depended upon more than those of the average operator.

Change in Nickel Shows

The following extract from the *Chicago Daily News* is of interest because it describes an anomalous condition of affairs which prevails throughout the country:

"Is the nickelodeon increasing or diminishing in its hold upon popular favor?

"This is a question which has been prompted by a recent shift in the admission price for such entertainments and the strict manner in which the fire department is insisting upon the observance of the city ordinances governing such places. It is a question whether the wisest of the theatrical 'magnates' are unable to answer—or, rather, they are unable to agree upon their answers.

"A passer-by along West Madison street on the west side, North avenue on the north side and Cottage Grove avenue or South State street on the south side would scarcely see any difference in the number of nickelodeons and cheap vaudeville houses, but the frequenter of these places could tell of a change that has come over the business in the last winter. The change has come, both in price and quality.

"When the motion picture show first took hold upon Chicago hundreds of little tin roofed and gaudily decorated theaters sprang into being throughout the city. These were principally located upon the business streets and were frequented by the class of persons usually found to be lingering around the corner saloon or the corner drug store. Later the nickelodeons began to invade the residence districts of the city and soon the amusement was established as a reputable sort of family entertainment.

"At first the proprietors showed only motion pictures, with perhaps a squeaking phonograph or an automatic piano to furnish entertainment to the ear as well as to the eye. Some genius then hit upon the plan of giving an entertainment between the showing of reels and pictures and generally hired some leather lunged 'singer' to shout off the popular songs of the week.

"For a long time this was the extent of the growth of the motion picture show, until some 'magnate' who believed that nothing is gained without something being ventured made a radical departure. Instead of making the entertainer a side line to the moving pictures, he reversed the positions of the two and made of real ability and reimbused himself by raising the the pictures subsidiary to the entertainer. He expended a little more money in securing an entertainer price of admission from a nickel to a dime.

"This was the real birth of the 'family vaudeville house.' Other managers improved upon the idea and soon four regular vaudeville acts were offered, with a reel of pictures at the beginning and another at the end. The price remained at a dime and, although the houses were increased in size, this left a narrow margin of profit if really reputable actors or vaudevillians were hired. Then the houses formed two distinct classes. The first remained as it was, sticking to the low price of admission and furnishing fourth rate attractions, while the other made its prices 10 and 20 cents and furnished a really fair bill.

"This was the state of affairs when the nickel show season opened last fall, for, as in every other theatrical venture, the summer months are dead ones with the nickelodeons. Real money had been invested in the houses by this time, as witness two south side theaters opened this fall, the architects' plans for which called for an expenditure of $100,000. It soon became evident, however, that the bills in some minor theaters were not drawing so well as last year and the present situation is the result.

"Most of the old 10 cent houses have either reduced their prices to a nickel and resumed the picture and song entertainment or have invested more money and gone into the ranks of the ten-twent' shows. Investors are uncertain which class offers the best field and owners undecided whether either sort of show will pay."

Peary and Whitney on Board the "Roosevelt."

Gyroscope Steadies M. P. Camera

At a recent meeting of the Societe de Physique, of Paris, an interesting method of taking moving picture views was presented by M. De Proszynski. Heretofore such a camera had to be mounted on a tripod to keep it quite steady and it was generally turned by a hand crank. The inventor succeeds in making a hand camera for use in taking such views. He keeps it steady by using the principle of the gyroscope in an ingenious way, so that holding it in the hand causes no trembling. But the problem was how to drive the gyroscope and also the film machine, as an electric motor with a battery is not practical, neither is a spring motor. He uses a small compressed air motor devised for the purpose, and it is very compact. It gives no shocks when running, which is, of course, an essential point. A unique feature is that an ordinary bicycle pump is used to fill the air cylinder of the motor, so that the whole can be made in the form of a hand camera about the size of a large kodak, and it is thus self-contained. The inventor showed what the camera would do by projecting some street views on a screen. These were taken when moving the camera about in the hand quite rapidly, and the images were remarkably sharp.

"North Pole" Cook in Pictures

By Charles F. Fagin

Dr. Frederick A. Cook.

IN one sense, at least, Dr. Frederick A. Cook can "come back." When it was announced that he had at last discovered the North Pole, he became a world hero immediately. Then came Peary with his counter-claims, casting doubt upon the record of Cook's achievement. Strenuous, if quiet, campaign for public confidence ensued. In the midst of it all Dr. Cook disappeared. It is claimed that, his health impaired by the rigors of his long experience in the arctic regions, he had been unable to bear up under the strain of continued suspicion and the jibes of yellow journalism, and had fled to a secluded retreat where he might regain his lost health and restore his shattered nerves.

The course of events in the investigation of Cook and Peary is a matter of public record. Not only has every newspaper in the world commented on the facts it related, but the popular and technical magazines have taken the matter up and pursued it to its farthest conclusion. Indeed, Dr. Cook himself is now running a series of articles in one of the widely circulated popular magazines, his object being to win back at least a portion of that public confidence of which so singular a series of circumstances deprived him.

On acount of this world-wide controversy, much interest centers in the North Pole Picture Company's special film, "The Truth about the Pole," in which the much discussed Dr. Frederick A. Cook appears as the principal acting character; for just at this time Dr. Cook is preparing to submit his proofs to the world that he has been the victim of the world's greatest conspiracy.

Whether or not the doctor will be able to prove his case may be left to the strength of his evidence and the manner in which it is received. However, the film subject, which was given its premier at Hammerstein's Manhattan Opera House, and excited theatergoers as few other moving pictures have done previously, should prove an immense drawing card elsewhere if for no other reason than that Dr. Cook is without doubt the best advertised man in the world. And now that he offers in dramatic form, by means of the picture, the "exposure of the North Pole conspiracy," interest will be aroused and both his friends and enemies will be eager to satisfy, if nothing else, their curiosity, and this will mean money for the exhibitor of these films. Dr. Cook is now filling lecture engagements, which should serve to prepare the various states for receiving the film production when bookings begin. Negotiations are under way for acquiring the Coliseum in Chicago, and other large auditoriums in various cities, for engagements of one week each. Dr. Cook himself will appear at these places, together with the film, giving a two hour's entertainment.

Dr. Cook will lecture and hopes, with the help of the pictures, to prove his case.

National Geographical Society Discussing the Cook Evidence.

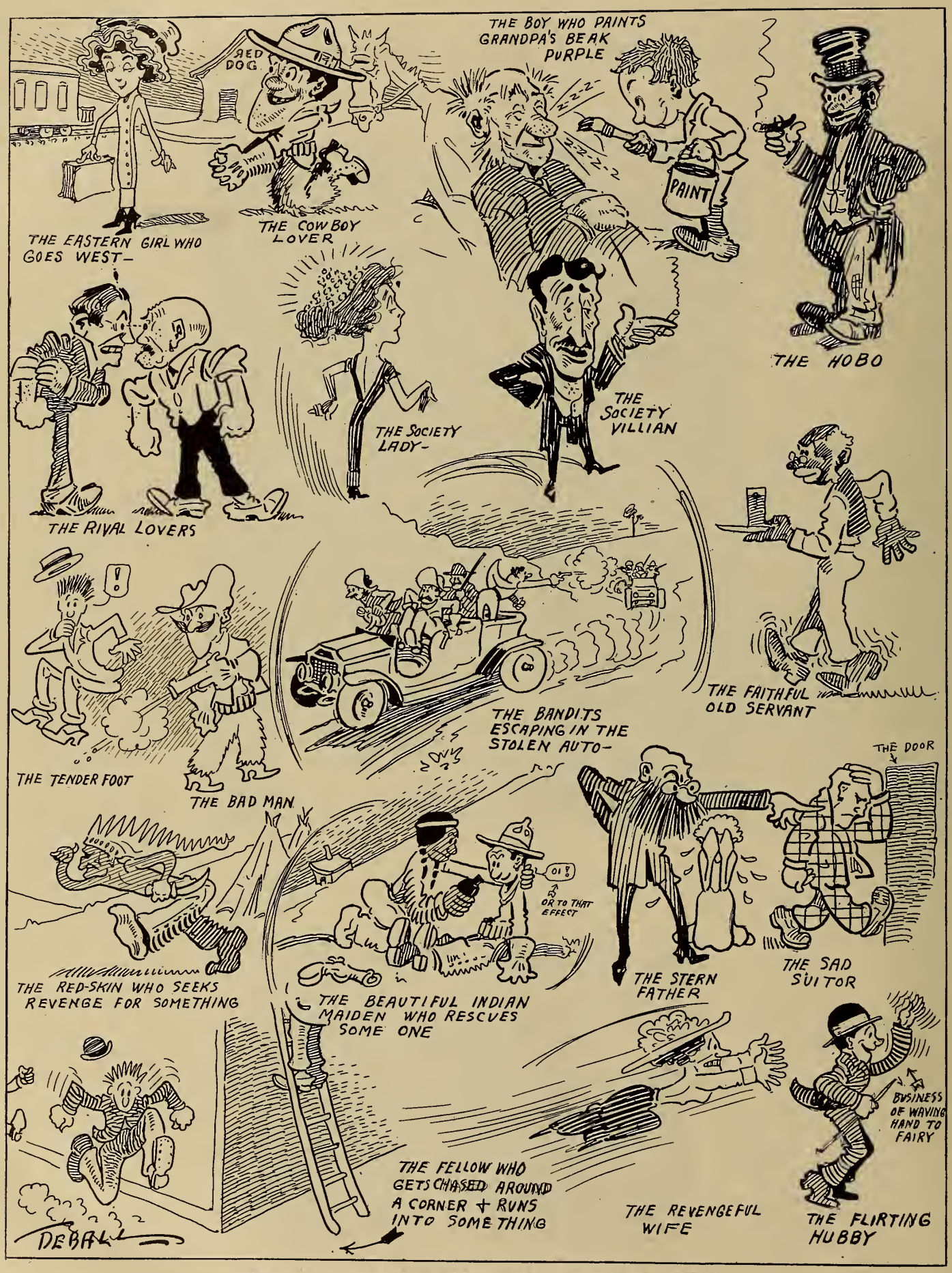

WHAT WOULD THE FILM PRODUCER DO WITHOUT THESE?

Recent Films Reviewed

A Tale of Two Cities.—Vitagraph. Probably the most ambitious production ever attempted in America—photoplay or otherwise. Few stage producers have ever attempted to show so many scenes and show them so well. Certainly no story ever received a more complete scenic presentment. The amount of thought and care that went into the making of those scenes is inconceivable, but the spectator senses it in a vague way and is deeply impressed. The fine fresh costumes, the settings replete with art and circumstantial detail, the superb photography, the intelligent acting of the principals, the skillful grouping and maneuvering of the ensembles, the powerful story, all go to make a photoplay of superlative merit—one that sets a standard for the future and will long be remembered. There is only one objection of any weight which can be brought against it: the first two reels suffer from a plethora of incidents—the shiftings of scene are too frequent, giving rise to an impression of jerkiness and over-fullness. The dramatic interest, while sustained, seemes rather disconnected; particularly is this true of the second reel which, moreover, lacks a climax. These faults are doubtless more apparent from a separate viewing of the reels than they would be under a continuous performance. The first two reels are really preliminary, finding their climax in the third, and they should all be seen together. It is in the third reel where the dramatic threads are drawn together, and the resulting clash and climax proves impressive in the highest degree. In this reel there is a succession of scenes which, for art and realism, challenge comparison with the finest productions of the legitimate stage. The next time the photoplay is twitted for vulgarity and inferiority, Vitagraph's "Tale of Two Cities" will be an overwhelming answer.

Forbidden Cigarettes.—Gaumont. A cute little comic remarkably well acted by the "kids." It is a subject that might easily become disgusting, but did not pass beyond legitimate bounds as here presented. It brought a great deal of laughter. The French kid proves to be very much like the American kid—particularly when naughty. And French parents, though pretending displeasure, are inwardly tickled by infantile transgressions that show spirit—just like American parents.

My Prairie Flower.—Melies. An interesting comedy drama compounded out of elements tried and true, with enough novelty to give fresh appeal. There are several violations of plausibility, but the play is not serious enough to warrant specific charges in this respect. The Texas settings are satisfactory, but that one which attempts to show a wealthy home in the east is glaringly inadequate. It recalled old, old times. The acting shows a lack of finesse, but is effective in a broad way.

Owanee's Great Love.—Bison. The old, old thing, but enacted with spirit and with quite a fair semblance of Indian characteristics. The heroine part was taken in capable fashion, the actress seeming to be exceptionally well adapted for Indian roles, if indeed she be not really an Indian, which might easily be the case for she certainly looks the part. Her combat with the Indian warrior was stirring. So also was the combat between the two braves. The Bison company has done so many—too many—of these Indian subjects that it knows how to present them with good pictorial and dramatic effect, even if the plots are of a twice-told variety.

Maid or Man.—Imp. A jolly farce of the helter-skelter variety. Nothing very new about it, nor anything of particular merit, but it went off pleasantly and brought many laughs.

By the Light of the Moon.—Rex. A decided novelty. The action is all *en silhouette*. The shadow actors get into many predicaments that provoke laughter. The trick features are capital. The screen has, of course, a very unusual appearance, not without beauty. In fact, the contrast between the black silhouettes and the silvery background is quite pleasing. The whole thing has been engineered very successfully and shows what the film makers could accomplish if they would only try some experiments with their fertile photographic medium. Great credit to Rex, both for the innovation and for the successful achievement.

The Writing on the Blotter.—Edison. This film is manifestly a routine product, lacking inspiration. The main incident is hackneyed and everything else happens just as one expects it will. None of the actors seemed to care for their parts. The photography is dingy. The settings show considerable care, though one of them—the receiving teller's window—is meager in realistic details. The scene showing the exchange of satchels is not plausible. None but the greenest amateur would think of robbing an automobile in such an open manner. The tableau at the end capped the climax of a string of time-worn expedients.

Around Constantina, Algeria.—Pathé. An exceedingly interesting scenic subject in that it gives us an intimate glimpse of the Algerian people, as well as views of the picturesque environment. Standing in the narrow streets and watching the curious Arab types pass by, affords us an easy and profitable opportunity of learning "how the other half lives." The illusion of actual presence upon the scene strikes the spectator with exceptional force in this film.

The Test.—Lubin. A triumph for Florence Lawrence. In the part of a nice sweet healthy girl she creates a fine impression. It is a part that might amount to nothing in other hands, but Florence Lawrence just naturally, without fuss or frills, makes it count. Personality shows in every move. She holds the attention like a magnet. Lubin never made a better move than when it captured this queen. The play is slight in structure, but has many charming touches, and, thanks to the leading lady, proves a rare delight.

Rival Candidates.—Edison. A wholly admirable comedy. It is plausible, witty, apropos, and close to human nature. In all matters of detail, both material and dramatic, it shows evidence of careful working up. Take for instance the three politicians—as types they are photographic. Or the band of suffragettes; or the crowd watching the election returns—all true to life and not overdone. The whole affair is so American. The film should never be exported for it would not be understood. A lecturer who was endeavoring to interpret America to other people, however, could use it with illuminating effect. The status of the American woman, the American child, the American politician, are suggestively portrayed. Also the vitality and democracy of the whole social fabric. It is American to the bone. The acting was all good, except perhaps the wife who was a little stiff and took matters too seriously. Particularly good were the "mob" scenes, of which there were several, all handled in a lively convincing manner and yet with the proper pictorial effect. All exhibitors who want to show their patrons a first-class American comedy must run this film. It is particularly rich in "trap" effects, with its brass band, tin pan orchestra, tin horn charivari, etc. It keeps the trap drummer busy following his cues, and the noise has a rousing effect.

The Beauties of San Souci.—Eclipse. It seems rather foolish to take moving pictures of still scenes. So much is lost and nothing gained. A series of slides would do the subject greater justice. But, of course, we are not liable to see any scenic slides in motion picture theaters under present conditions, so we must be grateful for the motographic makeshift. These scenes of San Souci are almost dreamlike in their beauty, showing what man can do to improve on nature. Not even abominable photography can kill the beauty of the scenes, for we still have composition if not detail. Eclipse seldom turns out a poor piece of work like this. There was no sunlight in the pictures. Was it due to the Eclipse?

Comrades.—Eclipse. There seemed to be no sense in this man's sacrifice, so it had small effect. The motives were puerile. The piece may titillate the easy sensibilities of the sentimental, but it will act like a red rag on the sober minded. It will divide audiences into camps of the sobbing and the

cursing. The production is good, the acting likewise, except for an excess of pantomime. It is in all respects a typical Eclipse film. One would know it without any marks of identification.

When the Light Waned.—Vitagraph. Congratulations, Jean! You carry the burden of a whole film, which is more than many human actors can do. Without you the film would be tedious; you supply the one element of interest and novelty. You're a handsome actor, Jean, yet you carry yourself without conceit, and with a freedom from camera-consciousness which few of your human confreres can equal. We wonder what salary the Vitagraph company pays you, Jean. Surely not less than fifty bones, which is said to be the price of a leading actor. If Maurice and Florence get more than you do, don't you stand for it a minute. They are less indispensable than you, Jean; you could take their parts, but they could never take yours.

Pots, Pans and Pottery.—Pathé. Quite amusing until it developed into a rough house. The possibility of such a super-esthetic servant girl is rather slight, but there is wit in the idea, and several scenes brought a volume of laughter. The rough-house finale brought some laughter but not as much as those scenes which depended on wit alone.

Max Makes Music.—Pathé. A good reel-filler. Not particularly novel, but quite funny and worked up with spirit. The final scene was a good climax, but the scene itself lacked a climax.

The Iron Master.—Edison. A lavish production disclosing an interesting story and some polished acting. The two French types—the Duke and the corpulent capitalist—were well assumed. But this very virtue had a negative value because there was no attempt to give the other actors any French characteristics; consequently the ensemble was inconsistent. The man who took the part of the corpulent capitalist is without any question an actor of ability. What a pleasure it is to see a photoplayer who really has presence, who stands forth calm and unafraid. Most of them seem to be suffering from the incipient stages of camera-fright. The settings all show Edison care and perfection. If the iron foundry was a studio fabrication, it had a remarkable semblance of reality. The motives of the plot are obscure to some extent, with the result that some scenes lost their full dramatic force. It is a play that demands dialogue for its complete exposition, so the fault is not really Edison's. Having chosen to present the play, they did it as well as anybody could expect.

Lieut. Scott's Narrow Escape.—Pathé. A drama that depends for its interest solely on physical action. There are no mental, moral or spiritual elements whatever—not even a love story. As the action is neither very novel nor very thrilling it stirs only a mild degree of interest. It is fairly well done, however, and may serve to stir thrills where the Indian subject is not so well known as in America.

Satan Defeated.—Pathé. This piece has two points of interest, the trick effects and the picturesque backgrounds. The drama, as drama, is puerile; the acting is crude; the actors are scrawny; the coloring must have been done by a child. A long time ago America was so pleased with colored films that color alone was sufficient to make a film go. But now the novelty has worn off and we demand a little art along with our color. Color and art are not synonymous, as this film well demonstrates.

Taming a Tyrant.—Essanay. Whether to classify this amusing subject as comedy or face is a question. The action is so plausible and the characters so life-like that it seems to belong in the rank of comedy. But after all, *is* the action plausible? Would a man of the tyrant's disposition submit to such a depth of ignominy? A man will humble himself to great depths under physical coercion, but never so far as to don a woman's apron and do woman's work. A man will sink to any depth as a man, but he won't be a woman—not even a nice woman. This is a fact; we don't know why, nor attempt ot justify it. A headstrong man like the tyrant never would have borne it. So the film shows an impossible occurrence and must be relegated to the category of farce, as a drama that distorts reality for humorous effect. The piece is very funny and presented in good style. It has a homeliness that is life-like.

The Heart of a Savage.—Biograph. When the old "grateful Indian" wheeze got under way we began to groan and suffer anguish; but we suddenly stopped, remembering that it was Biograph. No matter how dark the way we put our trust in Biograph, and our faith did not go unrewarded. For the old wheeze began to turn a new twist, and developed into a situation of great dramatic power. The pathos and irony of it are very moving. It is all worked up in the logical Biograph manner, and the acting fully up to standard.

The Outbreak.—Selig. Here is a Western thriller that depends for its interest upon sheer physical action. Being very well done and with a daring novelty for a climax, it achieves a large measure of success. The Western scenic backgrounds have been chosen with an eye to pictorial effect and prove unusually pleasing.

Priscilla and the Pequot.—Kalem. The same old Indian thing. The succoring white woman, the grateful Indian, the rampageous tribe, the grateful Indian's warning, the white family's escape, the burning of the log cabin, the grateful Indian's death—all were present at the roll call. The only element of novelty is the historical setting, which goes back to Puritan days in New England. This period is suggested with enough success to save the film from utter banality. Some interesting winter landscapes also add a mitigating touch.

Famine in Comic Films

"We must have humorous pictures to draw the crowds," said a motion picture man. "The tragic pictures are well enough as fillers, but if there is not at least one good comic feature the bill is a failure. Our patrons came not to see the emotional side of life, which to them may be too common. They want to be amused and forget their cares. The comic film fills the house, but they are getting less humorous every week."

The film which in its time has amused motion picture lovers, but which is now almost rejected by managers, is the "chase" picture. The boy who steals a peddler's scales or perpetrates some other playful prank and is chased over hill and dale, overturning baby cabs and stands in his flight only to have his pursuers augmented, has ceased to be a joke. This picture in several thousand variations has been used every day for two years.

"Unless some genius can discover a vein of humor so far untouched, several men in our business will be hunting new fields of labor," declared this manager.

Film Maker Seeks Legislation on Educational Subjects

Future generations may learn their geography and history by looking at moving pictures, if manufacturers of picture films succeed in inducing educational leaders to realize the advantages of reaching the minds of the young through the optic nerve.

An eastern firm manufacturing films has a lobbyist at the capitol who is trying to interest legislators in the plan. When the legislature gets back on the job next week, it is expected that a demonstration of the working of the manufacturers' scheme will be given before the solons.

It is the plan to induce the state to incorporate in its educational system the moving picture device. Manufacturers would sell films to the state which would maintain a circulating library for the distribution of the films among the schools.

Of Interest to the Trade

By L. F. Cook

New York Letter

Last week we had a few words to say about the attempts that are being made to improve the stories of the photoplay.

Such attempts are laudable and deserve applause. We wish somebody would take up the subject of advertising those films with a view to improving that branch of the industry.

Week after week we read carefully the advertising matter put out by the film manufacturers, and it has been gradually forced upon us that there is a great lack of originality in all of it. To begin with, it is very seldom that a synopsis consists of anything but a bare story of the plot, then a few words of more or less fulsome praise, an announcement that this particular reel is a feature, and let it go at that.

Yet, knowing them, and the conditions under which they work, we hardly blame the advertising men. On the contrary we sympathize with them and lay most of the blame upon the manufacturers. Most of the advertising men of the various plants take their views of the mental caliber of the average exhibitor from their bosses. We don't know of a single instance where the advertising man has been sent out on a trip among the exhibitors to study real conditions. Such a cause would surely enable an advertising writer to get more closely in touch with his readers. Think of trying to sell something to a vague, indefinite class of beings that are known to exist somewhere in that vast, unexplored territory west of the Hudson river. Why, it's like winking at a pretty girl in the dark. What's the use? Next, most of the ad writers have to submit their stuff to headquarters. If it shows any degree of originality, headquarters catches cold in the feet—which is something of a paradox when you think it over—and cans the stuff with the admonition never to get off the beaten track again. At least that's the way it appears to us, because after just reading this week's bunch of dope we are frank to admit that there was not a single description that made us want to see any film.

What a situation—to read the advertisements of nearly forty different reels and not be moved by a desire to see a single one of them.

No imagination, no strengthening of the strong pulling point, no romance, nothing except just what appears on the surface of the screen.

We are very glad to be able to announce that a movement has been started whereby the film advertising men are to get together and discuss some of the points that have so hastily been jotted down here. We hope that this idea will take firm root, as we believe it would be of material benefit to the whole trade.

The industry is to be strengthened shortly by the addition of two remarkable films. One is a licensed subject, Pathés "Athaliah" (queen of Judea), and the other is an independent, Itala's "Fall of Troy." It is our conviction that the acting of the star in the "Queen of Judea" was never surpassed on a moving picture screen. The reel is essentially a one star part, the other actors being only used to carry on the story, but the acting of the title role is a revelation. It is a study, and the actress attains results seldom seen on any screen or stage. The reel itself is beautifully colored and is a credit to the industry.

The "Fall of Troy" is a two-reel spectacular subject that in all probability exceeds the "Burning of Rome." Of its kind it is the acme of picturedom. Being spectacular in nature it naturally gets its merit from the immensity of the work, the scenery and scenic effects, the numbers of people appearing, and the excellent photography.

These two subjects are essentially different, but are equally great in their respective class, and should be welcomed with open arms. The release date of either has not yet been announced.

Please read the following. It is from a New York daily paper:

Senator Jeff Davis of Arkansas holds the record as an entertainer of theater parties. Bedecked in his brown sombrero and brown long-tailed coat the defender of the Simple Life led a party of five through Pennsylvania avenue and dropped into every nickel theater on the Washington White Way.

It transpired that Senator Davis was only testing the statement of the mayor of New York that the national capital is a naughty city after nightfall. The senator said he found nothing to complain of.

Gaynor says Washington is naughty. Natural inference—search the m. p. theaters!

$12,500 Verdict for Jack Binns

John D. Binns, the wireless telegraph operator of the steamship Baltic, whose C. Q. D. messages brought help which saved the passengers and crews of the Republic and the Florida with which it collided, won a $12,500 verdict against the Vitagraph Company of America in March in the Supreme Court from a jury before Justice Greenbaum. Binns sued for $50,000, under the personal privacy statute, alleging that he had refrained from commercializing his celebrity and detested being misrepresented by the moving picture company.

On the trial, his attorney produced evidence purporting to show that moving picture profits on the films representing an actor in the part of Binns, with some large actual moving pictures of Binns's face taken surreptitiously, were $328,000, or more than the profits on the Jefferies-Johnson prize fight pictures.

The Vitagraph Company will make an appeal from the verdict.

Vitagraph Notes

The Vitagraph Company has just finished erecting a small settlement of log cabins surrounded with fir and cedar trees, within its studio enclosures. These will serve a very useful purpose in the portrayal of pictures where the real thing is so much more desirable than a make-shift.

Stacy, the official photographer of the Vitagraph

Company, is now in Hot Springs, Arkansas, making pictures of the Brooklyn base ball team, for one of the most striking base ball stories ever produced.

It is time to hear something about the Vitagraph Easter picture entitled "Easter Babies." There is nothing like having something seasonable, and this will fill the bill.

Once again the Vitagraph Company has been surprised to hear for the "steenth" time that Maurice Costello, the well known Vitagraph player, is dead, and has been so reported in the newspapers. Mr. Costello is very much alive, as evidenced in "A Tale of Two Cities," and a number of other life portrayals in which he is playing. He is anything but a "dead one," and when he was notified of his demise he was the livest man that the wirter has ever seen, as he denied the rumor and expressed a wish to meet the party who started it.

An American Topical Comedy

"The Harem Skirt" is the title of an excellent comedy to be released March 23 by the American Film Manufacturing Company. The company styles it a "topical," on account of the timely significance of its subject. While this classification is not justified in a technical sense, the makers are to be congratulated upon a production which fits in so well with the newspaper topics of the day.

The picture depicts the experience of a lady of social worth and distinction who, in search of something different and odd in the line of personal adornment, happens upon an announcement in the daily paper dealing with the reception accorded the harem skirt in Paris. She immediately decides that the skirt is worth while and proceeds to her dressmaker and orders one. The dress being completed, the results are so satisfactory that she decides to wear the dress home and to a social engagement that she has the same day. Her experiences upon appearing on the streets in her odd attire are comical in the extreme, and are followed by a most laughable series of adventures both indoors and out. The action is rapid and the laughs come thick and fast. Our frontispiece is taken from a scene in this film.

Nickels to Pay Their Fines

William Zajlock and Miss Solvio Cajaka, who run a moving-picture show at 1359 First avenue, New York City, were arraigned on a charge of admitting a minor to the theater. They were found guilty and fined $25 each, which they chose to pay in nickels from three large paper bags they carried under their arms. Court Clerk Fuller refused to count the money in court and said it must be taken up to a quieter room. So the two theater people and Clerk Hilly, who had been sent for, started up to a room on the third floor of the Criminal Court building. On their way up one of the bags broke and the contents scattered in all directions. This was too much, and the two prisoners were taken before the justices again while the question of legal tender was considered. It was finally decided in favor of Clerk Hilly, who maintained that nickels were not legal tender to an amount over $5.

Both prisoners were taken to the Tombs, where they decided to pay their fines in bills.

Frame Theaters Get Knockout Blow

Notices have been sent by Murdoch Campbell, building commissioner, to owners and operators of thirty-one small theaters in Chicago, located in frame structures, that after June 1, next, they will not be allowed to continue in business.

Most of these places run straight pictures, but some have one or two vaudeville acts all week or three or four acts Saturday and Sunday.

The new building code prohibits theaters in frame buildings after June 1. Edward F. Kelling, chief theater inspector, asserts that the owners of some of the thirty-one houses are trying to sell them, and he has given publicity to the new law to prevent the new purchasers from being imposed upon.

Some of the present 10-20 vaudeville houses will be affected by the provisions of the new code, but the list will not be materially reduced when the time comes for the new law to become operative.

San Diego in Films

A film to advertise San Diego, Cal., is in preparation by the California Motion Picture Company. Among the scenes presented will be a program of aquatic sports in which many citizens of San Diego participated. As the company will show the film in every city in the United States, San Diego will be given much valuable advertising and its claims for a salubrious climate will be given a big boost when the film, which will show rowing crews, sailing craft, motor boats and high divers all in action at once at a time of the year when snow and cold weather prevails in many places, is exhibited.

Sunday Shows in Beaumont

In the last issue of The Nickelodeon was reported an effort on the part of picture men in Beaumont, Texas, to run their shows on Sunday. They were all arrested and the case brought before the court for settlement. Judge W. H. Pope, of the Fifty-eighth district court, decided that the operation of a moving picture show on Sunday and the charging of an admission fee is not in violation of the penal code of Texas, so the four moving picture shows of Beaumont will continue to operate on Sunday.

Collier Advocates Motion Picture Instruction

"Moving pictures will be used generally in the school-room within two years," said John Collier, secretary of the National Board of Censorship for the moving picture companies.

"They will be a part of the school system, like books, and they will be used also to afford evening entertainment for the parents and thus interest them in school work.

"I cannot think of any study in grade schools or colleges that cannot be taught by moving pictures. Almost any arithmetic problem, for instance, can be thrown on a screen in some form or another.

"Botany may be taught by beautiful pictures, now that colored photography has been applied to moving pictures. I have seen a colored moving picture showed the planting of seed and the growth and development of a plant, its leaves and its beautiful flowers, all

within the space of ten minutes. Teaching botany in this way is almost an improvement on going into the fields.

"Biology and many other sciences may be taught by the pictures. One of the latest feats of the moving picture experts has been to photograph the moving wings of an insect—2,000 motions a second. These pictures may be run slowly so that the children may see just exactly how an insect flies.

"In natural history the children may witness sights that they never could see in the field—pictures taken with great care and patience, of mother birds feeding their young; of wild animals in their haunts, moving about as in real life, eating, sleeping, living according to their natures.

"Vivid interest can be given to history. The teacher can make it seem absolutely real by throwing on the screen representations of great historical events.

"Sunday schools, before long, will be using moving pictures to tell biblical stories to their pupils—a thousand times more effective and impressive than the charts now in use.

"In literature, scenes from the works of great authors might be thrown on the screen. In time, as the system gains a foothold, the moving picture of the author himself might be shown, long after his death, thus making himself and his work a living reality in the minds of the pupils.

"The beauties of teaching geography by moving pictures are obvious. The children can be taken on real tours of the world.

"The public library or a special school library will have charge of the films. Each city will have a constantly growing library of moving pictures—a circulating library—through which the pictures will be distributed to the schools."

The Actor's Looks

By J. B. Crippen

AMONG the many factors that go to make an actor's success on the photoplay screen, not the least is his appearance. Is he good-looking and does he know how to carry himself? If he can qualify in these respects his success is more than seventy-five per cent assured. (We use the masculine pronoun, but of course it is intended to cover the other sex as well—even more so.) An actor's looks and his stage presence are as important as his ability to express emotion or to portray character—if not more so. In other words, his physical endowments are more important than his mental endowments. Not that we wish to belittle the latter at all, for no actor's equipment would be complete without them; nor is it our purpose to discuss the relative value of these two points; we merely state the matter thus in order to emphasize our conviction that the actor's looks are of cardinal importance. As we are at odds with nearly every American film maker in this contention, as an examination of their stock companies would show, it is up to us to justify ourselves, and we will do so if we can.

In the first place, when we say actors should possess good looks we do not mean to imply that their features must rival the Venus di Milo or the Apollo Belvidere. To say that they must be "distinguished," would come nearer the mark. We mean that their appearance must raise them above the common herd, that they tend more toward the Venus di Milo and the Apollo Belvidere than toward the crowd of dingy, nondescript people who make up ninety per cent of humanity. Their faces must be expressive of a well-poised and healthy personality at the least; and whatever comeliness or beauty of feature they can add to this, inures to their value in direct proportion. That actors should have "presence" needs no proof or demonstration. On the legitimate stage it is a *sine qua non.* Yet look at our motion picture screens! Among all the cohorts of motion-picturedom there are not a dozen actors whose work is free from self-consciousness. They act like people who know they are being watched. When it is remembered that photo-players are removed entirely from the disconcerting influence of an audience, their self-consciousness seems inexcusable.

Why do we expect our actors to be well endowed physically? Because the stage ideal demands it. The stage is a world created by man wherein he makes life conform more closely to the ideal—"molds things nearer to the heart's desire." Man rectifies in this imaginary world the faults and inconsistencies of the real world. There poetic justice is shown at work and a nice balance of cause and effect. Everything is made as perfect as possible, within the bounds of truth. It is that improvement on reality known as Art. The people we place in this ideal environment must be more or less ideal themselves. We want them to be an improvement on the common run of humanity. Who cares for the love affair of a homely woman or the adventures of a weakly man? Such are fit only for comic treatment. We want our hero and heroine to be good-looking at least, and beautiful if possible. Even the villain must be handsome in his own devilish way. We don't want to see on the stage a replica of the commonplace humanity which we see in each other. We want our actors to have all the virtues of face and bearing which we lack ourselves. If they have them not, they are out of harmony with the stage ideal.

All this is aimed to prove our contention that the actor's physical endowments comprise an indispensable element of his histrionic equipment. It is really a self-evident fact and needs no proving. Doubtless readers of this column will wonder why we waste so many words upon it. For answer, we point to the stock companies of every film-maker in America. With the exception of Lubin and possibly Biograph, who present a passable aggregation of pulchritude, there is no stock company which would not derive benefit from a rigorous weeding-out and filling-in process. Many film-makers would thereby add a degree of popularity to their films such as could be obtained in no other way.

A recent film released by a well-known maker told the story of a law firm who engaged a new stenog-

rapher. She was a very good stenographer, but homely. She kept her employers resorting to the brandy bottle in order to bear up under the affliction of her face. Presently she went on a vacation and sent a cousin to fill her place. The cousin was not much of a stenographer, but she was pretty. To say that she pleased her employers immensely is scarcely stating it. She was a hit. The film was commented upon in several reviews as being very, very true. Let this be a parable illustrating our argument.

A Fraud

The typical "hayseed" was in town gazing at a sign board in front of one of the numerous motion picture shows. He looked long and earnestly. In fact, he remained there gazing intently for some minutes at the board with its gayly decorated literature, which depicted the struggles of a hero with the villain to win the love of a "fair one." At last the countryman muttered disgustedly to himself and started away. As he passed a crowd near the entrance of the show they heard him growl:

"That there signs says 'Movin' pictures.' I watched it for fifteen minutes and the blamed thing never did move."

Expressions We Frequently Hear

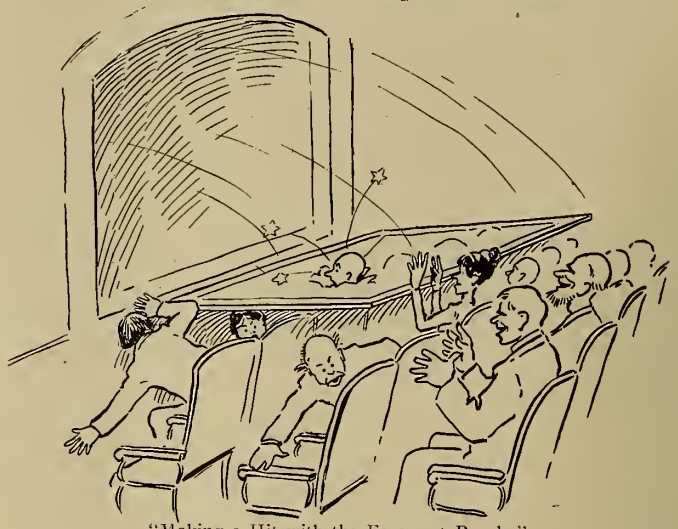

"Making a Hit with the Foremost People."

Synopses of Current Films

Biograph

COMRADES.

Mack and Jack are comrades, but the comradeship seems to be Mack's dominant quality, while Jack seems to merely tolerate Mack. Mack is sure enough the "Patsy." Mack "gathers the sheaves" and Jack devours them. Our introduction to these gentlemen of the "gentry" class is while they are enjoying their beauty sleep in the hay. The morning paper has fallen into the hands of Mack and an article in the society news, a column which Mack never fails to peruse, interests him. This he shows to Jack. It gives the intelligence that a member of Parliament is expected to be the guest of Mr. Franklin, one of the first families of the town. In this Jack sees a windfall. Suggestion: "Why not impersonate this gentleman and get there first. By George! It's worth the endeavor." The scheme looks good, so Mack is despatched to beg, borrow or steal fitting clothes, with which to carry out their plan. He is successful in pilfering a suit of clothes with tall hat that transforms Jack into a swell. Poor Mack suffers by the contrast. Still he feels that he will

enjoy his share of the fruits of their cunning. Poor Mack's prophetic soul has gone awry, for while Jack is enjoying the best there is Mack is simply a covetous spectator. Jack in his make-up has little difficulty in making the people believe he is the M. P. and the Franklins are extreme in their efforts to entertain him, having a match with their daughter as a paramount issue. Jack sees this and immediately makes up to the fair young lady. Poor Mack butts in upon every available opportunity with the exclamation, "When do I come in?" While Jack never once losing his equilibrium or dignity, ejaculates, "Who is this unkempt imbecile?" A splendid dinner is indulged in; a stroll in the park, the finest cigars, etc., fall to Jack, while poor Mack is allowed to play the part of Tantalus in the distance. If there is felicity in seeing his comrade thoroughly enjoying himself, then Mack's joy knows no bounds. But this would be doing "Damon and Pythias" to a frazzle. Mack's chagrin is becoming overwhelming and he loses control of his good nature when Jack is shown to his bedroom, leaving Mack to shiver outside. This is the last straw. Mack revolts. He will have his rights. So getting a ladder he climbs up to the window, and notwithstanding the objections evinced by Jack he crawls inside. Jack, however, denies him a place in the bed, intimating the floor is good enough. At this moment the real member of Parliament arrives, and Mack hearing some one approaching sneaks under the bed. Jack is unceremoniously bounced before he has a chance to clothe himself. "He laughs best who laughs last." Mack waits until they have left the room before coming from his hiding, then he gets into the vacated bed to at least enjoy a peaceful night's sleep, while Jack is forced to pass the same time shivering below the window, clothed only in a high hat and suit of pajamas.—998 feet. Released March 13.

WAS HE A COWARD?

It often happens that we malign a man who hasn't had a chance to prove himself by branding him a coward. To hold up one's end in a quarrel, a fistic or fire-arm combat, is really not bravery, it is indifference induced by impulsiveness. The brave man is the cool-headed man who faces danger in the full appreciation of its possible result. This is nearly always the outcome of an unselfish concern for our fellowman. Norris Hilton, a young novelist, is suffering from a nervous breakdown. His friend, having

had the same experience, writes advising him to try a stay out West on a ranch, promising that the rough outdoor life will suerly do him a world of good; besides he might be able to pick up material for a real Western story. The suggestion appeals to Hilton and he leaves at once, arriving at a Western ranch that is in need of hands. His refined clean-cut appearance rather amuses the foreman and he is engaged more in the spirit of a joke than anything else; but when introduced to the ranchman's family he meets the pretty daughter and it is a case of love at first sight. This upsets the foreman who is sweet on the girl himself and he induces the boys to impose on the tenderfoot hoping to drive him away or ridicule him before the girl. Hilton swallows all for he is indeed deeply infatuated with the artless little ranch girl. As this has no effect the foremean tries another plan, that of insulting him in the effort to force him to fight, but personal combat is not his idea of bravery, and he refuses to fight, although the foreman goes to the extreme in his provocations. The girl, with her Western ideas, is awfully disappointed in him, and scorns him as a coward. This is elation for the foreman. However, there is the real kind of bravery

and Hilton possesses that. A poor Indian is stricken with smallpox, and the gang would have thrown him into a ditch to die, had not Hilton come up and taken the poor fellow in his arms and carried him to a deserted shack, where he cares for him, he himself denied the right to step beyond the dead-line the gang has drawn and guarded. The next day the father of the girl is afflicted with the dread disease, and the boys are just as merciless with him as they were with the Indian—afraid to go near him—forcing him at the point of pitchforks and revolvers across the dead-line, where he is picked up and tenderly cared for by Hilton, who is now himself showing symptoms of the disease. Hilton with the assistance of a doctor who has come out from the town, nurses the victims back to perfect health, hut he has neglected himself in the care of them and, although cured is marked for life. The hoys now realize what real bravery is and Hilton is regarded as the hero of the ranch. Of course, the girl has now no thought of scorn, she, despite his marked face, regards him as her hero. This Biograph subject was made on one of the largest and most picturesque ranches in Southern California.—994 feet. Released March 16.

ALL FOR THE LOVE OF A LADY.

Edison

Lady Constance Primrose, a pretty girl of about twenty years, attends a ball and dances a minuet with Lord Howard, a very polished nohleman, who is obviously in love with her. Will Norfolk, a lieutenant of yeomanry, asks for the next dance. He is very shy and awkward before women, but is truly a man among men. Lady Constance generously favors him with the dance. Will ambles through it very awkwardly and clumsily tripping over his sword and her train, much to her embarrassment and disgust. After the dance Will sees an opportunity to apologize, to her and he does so. Lady Constance extends her hand for Will to kiss as a token of her forgiveness, when Lord Howard sees in Will a possible rival and angrily takes Lady Constance off. The next day Lord Howard writes two letters, one to Lady Constance reminding her of her promise to meet him at the Abbey Inn to dine, and the other to Will Norfolk warning him not to pay his accustomed visit to the Ahhey Inn and to cease his attentions to Lady Constance, under pain of death. His lordship gets the letters mixed; Lady Constance receives the one intended for Will Norfolk, while he gets hers and learns from it that she has promised to meet Lord Howard at the Abbey Inn; whereupon Will decides to go to the inn himself. When Constance reads Will's letter she realizes that Will, not having received the warning letter, will be at the inn and mindful of her own promise to meet Lord Howard there, she knows they will meet. Constance decides to disguise herself as a man and go to the inn to see what will hapen. Constance is the first to arrive at the inn and is taken for a man by Will Norfolk, who in a particularly good comedy scene discovers his identity. Lord Howard arrives at the inn accompanied by his lackey, but finds that Lady Constance has not yet arrived. He, however, orders dinner and proceeds into the tap room. Here he finds what appears to be a young man and tries to enter into conversation. After a few moments he discovers to his great surprise that the young man is in reality Lady Constance in disguise. Unaware of the presence of Will Norfolk, who is hidden behind a convenient screen, Lord Howard shows up in his true colors by insulting her. Will promptly comes to her assistance and in a thrilling sword fight with Lord Howard and his lackey he vanquishes them.—990 feet. Released March 14.

THE DEPARTMENT STORE.

Little Katie is a bundle wrapper and her chum, Bertha, is a cash girl. Max and Eddie are in love with the girls. Katie is very scornful of the male sex hut Bertha inclines very strongly towards Eddie. Max, the errand boy, tries vainly to get close enough to his divinity to talk with her, but his courage fails him at every attempt and her own attitude is distinctly disheartening. One pay night Katie carelessly drops the small roll of bills, her week's wages, on the floor. There is a foolish little under clerk, a girl, who picks up the roll of bills and not knowing to whom it belongs, slips it into her own purse. Katie discovers the loss and spreads the alarm. The forewoman is notified and the floor manager goes after an officer. While they are waiting for the officer Bertha, out of generosity and love for her friend, slips a small bill into Katie's satchel which lies upon the table, and Max, not wishing to be outdone by his sweetheart, does the same. Very soon the forewoman, in making an additional search on the floor for the lost money, conceives the same idea, and slips a bill into the little satchel. The floor manager returning and seeing the little satchel alone on the table, slips his hand into his pocket and adds to the contribution. This action is noted by Max, who now sees a chance to serve his divinity in very truth, and taking part of his own small earnings, he slips them into the satchel. Of course when the officer comes, he finds, instead of an empty satchel, one well stored with bills which more than equal the amount of the stated loss, because the little girl who picked up the roll, seeing her opportunity, also restored the money. Katie is in great distress when the officer, thinking that he has heen deceived, starts to take her to the station house for an explanation. Then one hy one they confess and Katie realizes the number of her friends. When at last Max's turn comes to explain, he is covered with confusion, which is augmented by the fact that Katie promptly embraces him out of the gratitude for his devotion and generosity. Of course their love affairs end happily in a charming final scene in which the two bashful young folks walk home together after work.—625 feet.

BABY'S FALL.

While a fond mother is preparing to take her little child out for the usual daily airing, she is called to another part of the house by the maid. The bahy, being left alone, finds amusement by throwing her toys out of the open window. In trying to recover the toys she climbs upon the window sill, loses her balance and tumbles out, but fortunately falls into the half-opened window awning of the floor below. The mother, returning, enters the room just as hahy falls out. Horror stricken, she staggers frantically to the telephone, and having succeeded in telling her husband's office boy who she is, prompty faints. The maid, unaware of the baby's accident and seeing the prostrate young mother, telephones for a doctor. Meanwhile the baby's father has left his office, making straight for home with all possible speed and attracting a great crowd of people on the way. This brings out the police patrol, the office boy calls an amhulance and all tear madly to the scene of the accident. Arriving home just as his wife revives and tells her terrible tale, he is overjoyed to find his little child alive and well in the awning directly below his window and having the time of her life playing with dolly. The task of rescuing the bahy is quite a hazardous undertaking, but with the help of his office boy, whom he lowers out of the window, holding him by the heels, she is safely hauled into the room, much to the gratification of the anxious parents as well as the crowd of enthusiastic spectators.—375 feet. Released March 15.

THE WEDDING BELL.

Clara, the benevolent daughter of John Grey, a wealthy husiness man, in making her accustomed calls on the poor in the lower East Side of New York, finds the Fenilosi family consisting of mother, Mona, aged nineteen, Rosa, aged seven, and Toni, aged eight, living in utmost poverty in one room, amid shockingly unsanitary conditions. The mother is ill and unable to work and in order to earn bread for the family Mona is making artificial flowers, assisted hy the other two children. Clara, desirous of heping them, gives Mona an order for severa hundred flowers, which she explains she desires to use in making a large bell for her wedding which is to take place in a short time. Mona calls upon the agent of the tenement and complains of the unsanitary conditions hut the agent cannot act in the matter of improvements without the owner's sanction. The owner enters the office at this moment and the agent refers Mona to him. He listens to her story hut absolutely refuses to make the necessary repairs. Mona goes home much discouraged. When she arrives home she receives a note from Clara Grey asking her to deliver the balance of the flowers as soon as possihle. Being thus urged to hurry, the whole family go to work on the flowers, even the mother who gets up from her sick bed. Giuseppi, Mona's sweetheart, calls; he is also put to work. The agent rudely interrupts them by demanding the rent. Mona cannot pay all. Her sweetheart contributes all he has but it is not sufficient. However, Mona assures the agent that she will bring him the halance as soon as she has delivered the flowers and he leaves, apparently satisfied. Clara, her fiancé, Samuel Rice, and their friends Dr. Watts and Marian Linsey are busily engaged in decorating the wedding bell. During the process Clara has several slight fainting spells, but, as they pass away almost immediately, no importance is attached to them. Mona arrives with the halance of the flowers and Clara and her friends gaily complete their task. Clara and Rice are married the next evening, but no sooner has the minister pronounced them man and wife, than Clara falls fainting into her husband's arms. She is at once put to bed and Dr. Watts diagnoses the illness as typhoid fever. Mr. Rice, in trying to arrive at the cause of the illness, recalls Clara's fainting spells while decorating the bell. They decide to examine the flowers on the hell. Dr. Watts puts them under the microscope and finds them infected with typhoid germs. They decide to trace the flowers to their source. Their search leads them to the tenement of the Fenilosis where they find Mona in an atmosphere of disease and pestilence, making flowers. Dr. Watts finds the mother's illness a violent case of typhoid and, obtaining the agent's address from Mona, they hurry to his office to learn the name of the owner of the tenement in order to have him brought before the Health Commissioner and severely punished. Upon stating their errand to the agent, they are horrified to learn that the owner of the tenement is none other than Clara's father, John Grey. Rice then discloses to Mr. Grey the fact that the illness which is endangering the life of his only child was contracted in one of his own filthy tenements, for whose proper sanitation he had refused to spend any money. Rice then persuades Mr. Grey to visit the tenement. The latter when hrought face to face with the terrible conditions, is seized with a spirit of remorse and starts about to remedy his past neglect. He gives orders to have the tenement renovated and remodeled, has the mother taken to the hospital where she will receive proper treatment and nourishment, gives Giuseppi a position as his chauffeur and does all in his power to atone for the past. Clara is spared to him and, upon her recovery he takes her to the remodeled tenement where we find the Fenilosi family living happily under the greatly improved conditions.—1,000 feet. Released March 17.

OH, YOU TEACHER.

Essanay

Upon the resignation of Rose Baird, who elopes with John Green, a young farmer, there is a meeting of the school board of the Pumpkinville school, where it is decided that the next teacher selected will be the homeliest applicant who appears. Thus they will have the assurance of being able to retain the lady at least for one school term. An advertisement is sent to the county papers and the next day a half dozen would-be teachers are on hand. Mrs. Jenkins, president of the board, cautions the other two members of their promises to select the homeliest one, a difficult matter to say the least. In the end two gentlemen directors insist upon employing pretty Elizabeth Brown. Henry Snow, the younger member of the board is visihly much impressed by the new teacher. He accompanies her to Mrs. Jenkins' home, where Miss Brown is to board, and asks permission to call. The request is blushingly accepted, but young Snow has not figured on Eva Jenkins, a girl of fifteen, who, despite her tender years, is very much in love with the young school director. In her efforts to make her way clear with Henry, Eva writes an anonymous note to Miss Brown, informing her that Mr. Snow selected her because he thought she was the homeliest one. Serious complications follow, until Eva's little brother confides to Snow that it was Eva who wrote the letter. The unhappy circumstances have brought the young teacher and her heau more closely together and they resolve to go to the city immediately and he married. They had barely left the house when Mrs. Jenkins discovers the note left hy Miss Brown and young Snow, informing her of their intentions. Eva is justly humilated, but has learned a valuable lesson which she is not likely ever to forget.—1,000 feet. Released March 14.

THE FAITHFUL INDIAN.

Will Talbot, a miner, is severely injured in an explosion of dynamite on his claim and his life is saved through the aid of his faithful Indian servant. The Indian carries him to their shack and rides to town for the doctor. When the latter arrives he finds that Talbot has not only suffered severe face burns but seems to have also lost all knowledge of his identity, a species of insanity occasionally the result of a violent shock. The doctor sets about picking the bits of stone and powder from his patient's face, when, to his surprise, he finds among the tiny articles a few grains of gold dust. Talbot has made a strike! The scheming doctor plans to cheat the stricken miner out of the rich claim, but his inquiries from the Indian result in failure. Later the doctor returns with a following of town bullies who endeavor to wring a confession from the Indian through torture. Knocked down hy a stiff blow from the hutt end of the doctor's revolver, he rises again, his memory returns. Single-handed he fights the bullies and wins, driving them from the house. The incident results in Talbot giving the faithful Indian a partnership in the valuable claim.—1,000 feet. Released March 18.

Solax

PUT OUT.

Going away upon business, Scroggins bids his wife a fond bood-bye. Returning to the room after her husband's departure, Mrs. Scroggins finds Mary, the maid, engaged in a flirtation from the window. The masher with whom Mary has been flirting determines to see the fair lady who has invited his attention, and so securing a ladder he climbs in through a window. Mrs. Scroggins, coming into the room, is amazed and alarmed to find an intruder in the room. The masher, supposing that Mrs. Scroggins is the girl with whom he has been flirting, begins to make love to her. Beating a hasty retreat, Mrs. Scroggins runs frantically through the house and, coming finally to the kitchen, finds Nora engaged in a quiet tete-a-tete with a husky plumber who has come to fix the pipes. The plumber readily consents to come to the assistance of Mrs. Scroggins. The two women remain in the kitchen while the plumber goes to dispose of the intruder. In the meantime, Scroggins, who has missed his train, returns to his house. The masher, hearing his approach, secretes himself. Scroggins and the plumber, entering the room at the same time, collide. The plumber, thinking that Scroggins is the one to be evicted, promptly proceeds to throw him out of the window.

CARIBOU HUNTING.

This film shows the great Northern wilderness in all its autumn beauty. The scenic views in this film are absolutely without a peer, the tinting and toning is wonderful, and the beautiful scenes depicted give an accurate portrayal of the grandeur and beauty of the virgin forests.—Released March 10.

A MIDNIGHT VISITOR.

John Brown and his wife, Mrs. Brown, are asleep in bed. Mrs. Brown, awakening suddenly with a start, hears a noise in the next room. She endeavors to awaken Mr. Brown, but Brown, the foxy old owl, fears there is burglars in the house and feigns sleep. She finally succeeds in getting Brown out of bed, however, and directs him to ascertain the cause of the rumpus. The next scene shows the dining room with Wabbles, the pup, in the midst of broken dishes, enjoying the remainder of the late dinner, knocking the dishes from the table and wrecking the place generally. We see Brown enter the room adjoining in his pajamas. As he enters he hears a terrific crash in the next room. Thoroughly frightened he makes a break for the door, but on the way out he spies a bottle of good old rye and to steady himself in his fearful undertaking he takes a good nip at the bottle. He again starts for the dining room door, and again he hears a terrible crash (Wabbles is finishing the dishes). Gracious, thinks Brown, there must be a room full of them, and to get up the necessary spunk to meet such an army of crooks he again takes a good dose of the Dutch Courage. This preliminary over he again advances unsteadily but determinedly toward the fatal door, prepared to meet and vanquish a dozen burglars if necessary, when lo, from out the chaos of crashing dishes and rending wood, he hears the soft strains of a musical melody issuing from the dining room. It was Wabbles running up and down the keyboard of the piano. Ha, Ha, thinks Brown, the burglars must be a jolly lot of fellows indeed, and Brown, helped a great deal by the copious draughts of the rye, begins to feel real roughish himself, and proceeds to give vent to his feelings by executing a little fancy step all by himself. But this is not catching the burglars thinks Brown, and so taking the bottle with him and imbibing freely on the way, he takes his uncertain route towards the general direction of the dining room door, but arriving at the door he no longer sees one but several, and making for the one nearest him he enters (so he thinks) and slips comfortably into an easy position on the floor, the bottle clasped tightly to his bosom. Meantime Mrs. Brown, becoming impatient as to the outcome of the conflict between her husband and the burglars starts for the scene of battle. She hears terriffic crashes, and thinking her husband is in need of assistance, calls the police captain and his trusty assistants. They tiptoe cautiously toward the door, but they do not find a burglar in active operation but instead Wabbles asleep on the table and Brown doing the same on the floor. The climax is a scream. Brown has to subscribe towards the Poor Fund and gives the money to the Captain to distribute(?) among the poor, and we leave Brown facing his wife with a sheepish expression on his face, preparing to meet———well go and see the picture. Released March 15.

THE HINDU PRINCE.

Mr. Aug. Jones writes his wife while traveling abroad for his health that he is bringing home with him as a guest Prince Seika, a Hindu hypnotist, whom he met while in India. At the entrance of the Jones' household the Prince becomes infatuated with Mrs. Jones, but being aware of the great love and devotion that she holds for her husband, he realizes that whatever love he may have for her is hopeless. At a hypnotic seance given by the Prince, it falls his lot through persuasion to put Mrs. Jones under the influence of hyponotism. Upon finding that she is an easy and susceptible subject, he lays a hazardous plan to poison her husband with a poison that he furnishes, which causes the victim to become an imbecile, but of a curable state. After the husband becomes insane the Prince advises Mrs. Jones that he be placed in an asylum. He then compels her to apply for a divorce on the grounds of insanity. He arranges with a clergyman to marry them, the ceremony is about to be performed, but is intercepted by the return of the husband, who has been cured after remaining in the sanitarium for several months. On the day set for the wedding of the Hindu Prince and Mrs. Jones a final examination of Mr. Jones, who has been convalescent for some weeks past, is made, and he is pronounced cured. A letter is written to Mrs. Jones by the physician stating that she had better come and take her husband home. Upon the departure of the doctors, Mr. Jones finds a newspaper left by the doctors, and sees the announcement of the wedding of the Hindu Prince and his wife. He makes his escape fro mthe sanitarium and arrives at his home just in time to stop the ceremony and denounce the affair as a nefarious plot and scheme on the part of Prince Seika. Upon entering the room where the wedding is taking pdace, Mr. Jones discovers that his wife is in a strange mood or condition, and realizing that the Prince has her under the hypnotic influence, he commands the Prince to release her from the terrible spell. The Prince refuses. Struggle ensues. Mr. Jones chokes the Prince into submission and compells him to bring Mrs. Jones out of it. The butler is called and Prince Seika and all his oflowers are forcibly expelled from the house, with instructions to leave the city within twenty-four hours, and all ends happily.—Released March 17.

Nestor

WAS IT WORTH WHILE?

Since the hour he entered the law firm of Robert Eldridge as a junior clerk, Ned Foster's wildest dream had been to one day become a partner of the old gentleman. Partly through his own industry, and partly through Helen Eldridge's influence over her father, Ned had progressed step by step; and now that the young man had won the girl's consent to an early marriage, he felt that his dream to be taken into the firm would soon be realized. His country sweetheart, Lucy Abbott, was forgotten, and within a few weeks Helen might have become his wife, had not his brother, John, read the announcement of their engagement and hastened to the city in the hope of recalling Ned to his senses. But the young man stubbornly declared he had gone too far to withdraw; so, in anger and desperation, John hastened to the Eldridge home to be told by Helen that she would give Ned up at once, were she sure that he really loved another. This was all that John asked. Immediately he despatched a letter to Lucy, telling her to take the first train; so that the next day when his brother called upon Miss Eldridge, it was Lucy who greeted him. From her place behind the screen Helen was not long in ascertaining the true state of Ned's feelings. John had spoken the truth, and, although more difficult than she believed, Ned was given back his ring and awakened to the wrong he had so nearly done to both.—1,000 feet. Released March 15.

Vitagraph

BETTY BECOMES A MAID.

Margaret is the older and Betty the younger of two sisters; naturally Margaret claims precedence. Their brother Jack writes home from college stating that he will bring a young unmarried millionaire friend to spend a few days with them. Margaret immediately gets in line to set her cap for the young visitor and warns Betty not to be too presumptious, for Margaret is well aware that Betty has the advantage in looks and winsomeness. In order to give her sister every chance, Betty says she will play waitress. Brother Jack and his friend join the family at dinner, Margaret pays considerable attention to Jack's friend, but he is attracted by Betty, who is now acting as serving maid. He is so smitten by the pretty maid, that he can see nothing else and Margaret becomes greatly incensed. The young millionaire makes up his mind to get acquainted with the waitress and Jack agrees to help him, not letting him know that she is his own sister, Betty, of whom the young fellow has heard a great deal. He follows Betty into the kitchen, bribes the cook to let him sit there until he meets the pretty girl. When she comes in he makes love to her, and in the excitement both he and Betty get covered with flour and sit in the dough, which the cook has been mixing. To add to the fun of it all, Betty tries to protect her face with the dough, from the kisses which the young fellow is trying to give her, she is a sight to behold, but nothing daunted, he makes a hole in the dough and succeeds in planting two or three kisses on her pretty mouth. Betty's father comes into the kitchen with Margaret, the young millionaire tells them he is in love with the waitress; explanations follow, Betty's identity is made known. The young fellow proposes to her there and then, the father's consent is gained and Margaret joins in with all the rest in offering congratulations to her little sister and intended.—Released March 14.

THE ACHING VOID.

A fashionable woman without children hungers for the love which she has been denied and grieves at the coldness of her husband, who also longs for an off-spring. Mrs. Martin tries to forget her loneliness by mingling in the diversions and pastimes of society. Mr. Martin for the same reason finds no comfort in his home and gives himself entirely to business and his club. They do not have even the consolation of each others' society, while one is engaged in her or his pursuits, the other is occupied elsewhere, they yearn for that pact of human love and family unity which makes the home a place of happiness and a joy at all times, the prattle of the child and the affections of one common interest. Mrs. Martin's sister, visiting the city, leaves her little daughter with her aunt, Mrs. Martin to spend the day with her. Mrs. Martin is delighted and when the child calls, she clasps her to her bosom giving vent to her motherly instincts and womanly nature. Mrs. Martin has made a previous engagement to attend a fridge whist, leaves the little girl at home and attends the card party. She wins the prize, a doll, which she takes home to her little niece. During Mrs. Martin's absence, her husband comes home and he is prompted by the same feelings as his wife to shower them upon the little girl, gazing with a fond desire to take her to himself to satisfy the craving of his heart and parental desire. Late at night the child's mother comes for her and takes her home. When she is gone, Mr. and Mrs. Martin wish that she was their own and invest them with what might have been, had they been blessed with a family of their own. Sitting at their own hearth contemplating these things, domestic instinct prompts Mr. Martin to enfold his wife lovingly in his arms and console her with the assurance of his love and sympathy for her deprivation.—Released March 17.

DAVY JONES, OR HIS WIFE'S HUSBAND.

Mrs. Davy Jones receives a letter from her mother that the Ladies' card club meets at her house and she would like to have her and Davy come early to help her prepare for it. Poor Davy, loaded down with bundles and his wife's poodle dog, reluctantly starts with Mrs. Jones to visit his mother-in-law. They board a street car, Davy gets in a rumpus with his fellow passengers, is thrown off the car and obliged to walk to his destination, some four miles or more. The ladies' card club holds session in the parlor, while Davy, tittivated in a gingham apron, has to assist in the house work and make himself at home in the kitchen. Sadly contemplating the trials and tribulations of a married man, he is disturbed by a sharp call from the club room, in response to which he is loaded down with several canine pets of the members of the card party and told to take care of them until called for. Davy gets a brilliant idea, pretends to be bitten by one of the pets and feigns hydrophobia, jumping around on all fours and barking like a dog. His wife and her friends rush into the kitchen, see his condition, summons an ambulance and insist upon his being taken to the hospital, Davy gives the sign of distress of the "United Order of Sphinks" to the doctor, tells him on the "Q. T." his little game. The doctor grasps the situation, puts Davy to bed, telling his wife that he is in a very bad state and his case is a dangerous one. His wife anticipating the worst, calls the undertaker and Davy has the extreme pleasure of being measured for his coffin, while his wife and the undertaker make love to each other.

this is more than Davy can stand, he gets madder and madder, jumps up and throws the undertaker out of the window. His wife is surprised at his sudden recovery and when she collects her nerves, she makes him get busy at house cleaning and practicing domestic science.—Released March 18.

THE PENALTY.

American

This story unfolds the characters of two women—one weak, with good and honorable instincts, the other naturally prone to worldliness and its attendant frailities. The weak woman is disclosed surrounded by home ties, a loving husband and a prattling infant. Business cares deman dthe husband's attention in the city. He fondly embraces his wife, and with a cooing farewell to his baby girl, he takes his departure happy in the thought that his absence will be of brief duration. He is no sooner gone than the fond mother's attention is immediately directed to the amusement of her little one. Throwing herself upon the floor, she gathers about her numerous toys ,and is assiduously engaged in making the baby's moments contented and happy when the frivolous worldly woman appears upon the scene. She describes in glowing terms the joy one can get out of life by becoming familiar with its worldly side, and after an urgent appeal, the poor weak wife yields to the pressure that is brought to bear upon her, dons her street attire, and leaving the baby in the midst of its toys, she leaves the home in company with her frivolous friend. The two women are next disclosed entering a gilded palace of chance, where gaudily dressed women and questionable appearing men are seen sated at various tabls in a mad endeavor to conquer fortune. Dropping into chairs at convenient tables, both are soon engrossed in play. Fortune favors the poor, weak wife, who has foolishly listened to the alluring tale told by her frivolous friend, and she shortly leaves the gilded saloon with a large su mof money. Encouraged and dazzled by the luck which attended her first visit, the wife continues in her suit for fickle fortune. Cold and indifferent to home ties, neglecting her husband and child, she becomes a slave of the God of Chance, until finally hopelessly involved, she risks her last remaining jewels in a vain effort to retrive her vanished possessions. A tempter now appears upon the scene in the form of a libertine and roue, who offers her money with which to follow the bent of her insane pursuit of chance, but a fortunate discovery by the husband intervenes at a critical moment, and his considerate forgiveness and generous counsel saves the unhappy distraught woman and she sinks into his arms, a repentant and loving wife.—975 feet. Released March 13.

THE JOB AND THE GIRL.

Nerve, well directed, is an attribute which seldom fails to obtain recognition, and when coupled with the proper modicu cof perseverance is a sure factor in business success. This story tells of a young man well equipped with these attributes. He is temporarily out of employment and happens, when looking over his morning paper, to have his attention drawn to the ad column. He reads in the want column a request for the services of a private secretary to a wealthy business man, whose qualifications must include aggressiveness and push. Feeling that he is just the man for the job, he applies in person, an din order to assert emphatically his fitness for the office, without asking for the position simply takes it. This is a display of rather more of the necessary aggressiveness than the old man expected and he indignantly orders the aspirant from his office, without avail, however. He leaves the office indignantly with the young man in charge, and meeting the janitor, a husky heavy-weight negro, he orders him to throw the intruder out of the place. The janitor proceeds to carry out his instructions to the letter, but encounters a will and firs tstronger than his own. The new secretary is determined to prove his qualifications and promptly locks the negro in the large office vault and locks him in. In like manner he disposes of all opposition, and works like a Trojan to make good, only letting up for a moment when he meets his enforced employer's daughter. A mutually good impression is formed on each side, paternal opposition having no effect whatever o nthis go-ahead young man. The young people seek to reconcile the father to the inevitable, and in order to secure an uninterrupted field are compelled to lock the irate parent in the vault as well. A license is hastily secured, the two are married, and come back for the necessary blessing. The old man is finally induced to appreciate the fact that his son-in-law possesses qualities which he is bound eventually to admire, gives his blessing, and all is serene.—600 feet.

DO YOU KNOW THIS WOMAN?

This film pictures the experience of the devoted, home-loving husband, whose every effort is to bring happiness and contentment into his house. With his departure in the morning comes a promise to reserve seats for the theater for the cherished wife of his bosom. Presenting himself at the box office of one of the most expensive and exclusively playhouses, he makes an effort to secure seats. The treasurer informs him politely, but firmly, that the house is sold out for the four coming weeks. Nothing daunted, the fond husband visits the different hotels, in the hope that by conceding a premium he may be successful in procuring two. After an exhaustive search he finally succeeds in procuring two at an excessive price. He places them carefully in his pocket, returns to his office, happy in the thought that dear "wifey" shall not be disappointed in any event. He hastens homeward, happy and buoyant. Dinner is hastily dispatched, and he retires to prepare his toilet for the evening's enjoyment. The wife's maid, too, lays out her gowns and hats in her apartment, and both begin to dress. The husband is shortly in readiness, and seeks diversion in the evening paper, the columns of which he carefully scans. He calls repeaedly for his wife, an dasks if she will soon be ready. Each time the query is met with the reply: "In a minute, deary." The wife's frequent changes of mind regarding what she shall wear have exhausted her patience, and she is in despair. She is finally clad to her complete satisfaction, and at once seeks her husband. He is snoozing soundly on the couch, where he had thrown himself. She calls to him loudly. He awakes with a startled expression and rubbing his eyes in an effort to open them, sleepily asks, "Gee! What time is it?" The wife bids him make haste. He looks at his watch and notes the time. It is half-past eleven. She has exhausted the interim between seven and eleven o'clock selecting a suitable gown with hat to match.—370 feet. Released March 16.

Among the Picture Theaters

ALABAMA.

Ensley is to have another new moving picture theater, which will be located on Avenue E and Twentieth street. Plans have been perfected and work will begin at once. The house is being built for Messrs. John M. Martin and associates, the present lessees of the Idle Hour theater. It will have all the modern improvements and equipment and when completed will be one of the handsomest picture houses in the south.

CALIFORNIA.

The Heritage Moving Picture Show is a late addition to the amusement places of Santa Cruz.

Plans have been prepared for a moving picture theater to be erected at South Park avenue and Forty-fifth street, Los Angeles, by J. L. Hill, of Monrovia. The house will have a cement floor, pressed brick front, composition roof, galvanized iron cornice, ornamental plaster decoration, etc.

Plans are being considered for the erection of a building at the corner of Mill and Main streets, Grass Valley, by the Los Angeles Amusement Company, a part of which will be occupied by a theater which will exhibit moving pictures when not occupied by traveling attractions.

The Queen is the name of a handsome new moving picture theater recently opened at the corner of Jefferson street and Vermont avenue, Los Angeles, by Messrs. H. B. Knapp and F. N. Knapp, who formerly owned and operated the Queen, Vaudette and Peter Pan theaters, of Battle Creek, Mich. The house is beautifully furnished, comfortably seated with opera chairs, and no expense has been spared to make the house first-class in every respect.

William A. Cory and Marcus E. Cory have been granted permission to erect a moving picture theater at 445 Devisadero street, San Francisco.

Messrs. Reichard and Morgan of Madera recently opened a moving picture theater in that place.

COLORADO.

The Princess theater of Sterling has moved into its new quarters in the Masonic Temple building on North Second street, which is more commodious than the old location. The house now has a seating capacity of between five and six hundred and has also been much improved in appearance.

Loser Brothers, of Denver, will convert their building at Laramie and Twenty-first street into a moving picture theater.

Messrs. J. P. Cuddy and others, of Telluride, have opened a moving picture and vaudeville theater in the Cronkleton building, that city.

CONNECTICUT.

The Pastime moving picture and vaudeville theater, of Ansonia, formerly owned and operated by Messrs. Kimberly and McIntyre, has been purchased by F. M. Clarkson and John P. Dibble. It shall be the purpose of the new owners to maintain the heretofore high standard of this house.

FLORIDA.

The Poinciana is the name of a handsome new moving picture theater recently opened at the corner of Cass street and Florida avenue, Tampa, by W. L. Hill, who has spared no expense to make the house one of the most attractive and comfortable in the city and assures his patrons of clean, high grade entertainment at all times. The interior of the house is finished in mission style, is comfortably seated and well ventilated, and has a capacity of 450. Ever alert to the comfort of its patrons the house has an efficient corps of well drilled attaches to look after their wants.

GEORGIA.

R. L. Stephens will conduct a moving picture theater at Sandersville.

The Savoy, 79 Peachtree street, Atlanta, after being enlarged and brilliantly redecorated in the German renaissance style, under the direction of William Oldknow, whose name is synonymous for the best and highest class motion picture attractions in that city, has been opened to the public as one of the most attractive and comfortable houses of its kind to be found anywhere. The house has been thoroughly renovated and a new $5,000 automatic pipe organ will soon be added. The program will consist of straight moving ipctures.

There will be no illustrated songs or vaudeville. The seating capacity is 400.

The New Theatorium, a moving picture house, has been opened at Macon by Dan Holt, a well known theatrical man of that city. The house is one of the most attractive houses of its kind in the city and the equipment is modern and thoroughly up-to-date, including a French plate glass mirror, said to be the first of its kind to be used in the south.

ILLINOIS.

The Colonial moving picture theater, one of the largest in Rock Island, formerly owned by the Colonial Theater Company, has been purchased by W. N. Powell and son, A. E. Powell, of Galesburg, both experienced men in the business.

The Electric theater at Saybrook, formerly owned by Chester Robbins, has been purchased by R. A. Shobe.

C. L. Hala is making arrangements to open a moving picture theater at Kilbourne.

G. H. Miller, formerly proprietor of the Crystal moving picture theater of Tuscola, has opened a moving picture theater in the Gebhart block, North Water street, Decatur.

A moving picture theater has been opened at Delavan by J. H. Hooper.

Messrs. Ben, Henry and M. H. Marr are making arrangements to erect a moving picture theater at Gillespie.

Aurora is to have another moving picture house. John Berscheidt, the well known theatrical manager, has leased the property at 28 North Broadway, and after extensive improvements will open the same as a moving picture house.

The secretary of state has issued a license to the Western Song Slide Corporation, Chicago, an amusement enterprise capitalized at $5,000. The incorporators are Cyrus Hernen, D. Kimbark, Marquis Eaton and others.

IOWA.

The Empire is the name of a moving picture theater opened at Sigourney by Homer Pennington, who expects to conduct a first-class house.

Wright Brothers are making arrangements to open a moving picture theater and vaudeville in Charles City.

R. J. Maloney, of Clinton, has opened a moving picture theater in DeWitt.

Ten capitalists of Fort Dodge have formed a company capitalized at $40,000 for the purpose of erecting a vaudeville theater.

Edward Chambless is the new proprietor of the Lyric theater of Iowa Falls, having purchased the same from G. B. Oble.

The New Palm, a handsome, up-to-date moving picture house, was recently opened at Missouri Valley by C. C. Pratt. The house is thoroughly equipped with all the latest devices and improvements and no pains have been spared to provide for the comfort and convenience of the patrons. One of the special features of this house is its lighting system. Tungsten lamps being used throughout. Provision has also been made for proper ventilation.

The Lyric is the name of a new moving picture theater opened at Lohrville, the first in the place.

KENTUCKY.

The Grand theater, 1016 Bardstown road, Louisville, has been purchased by Schaefer Brothers, and Otto Schaefer, a well know local amusement promoter, will be general manager. Arrangements have been made for a large airdome adjoining, which will be used during the summer months.

MARYLAND.

The property at 410 East Baltimore street, Baltimore, has been leased by the Motion Picture Company of America.

A moving picture theater will be erected at the intersection of Frederick avenue and Gilmore streets, Baltimore, for the West End Theater Company.

Plans have been prepared for a moving picture theater to be erected at 1358 West North avenue, Baltimore, by Abraham and Louis Benesch, which will have a seating capacity of 400 and will cost $10,000.

The Royal Amusement Company of Baltimore has been incorporated with a capital stock of $2,000 by August W. Schnepfe, 28 W. Lexington street; George F. Green, 2045 E. Lombard street; and Thomas B. Alexander, 2024 E. Lombard street.

MISSISSIPPI.

A new moving picture theater will be opened at Gulfport by B. S. Stanley, who formerly owned the Pastime theater at Pass Christian.

MISSOURI.

The Cornelius Amusement Company of St. Louis has been incorporated with a capital stock of $60,000, fully paid. The incorporators are Rose Corneling, John W. Cornelius, Claude S. Ricketts. It is the purpose of the company to conduct moving picture theaters.

The Washington Theater Company will erect an airdome at Granite City which will have a seating capacity of 2,000 and will cost $4,000.

The opera house at Clarksville has been giving picture programs on Wednesday, Friday and Saturday nights and Saturday afternoons, which have been well attended.

NEBRASKA.

The Elite theater of Seward has been purchased by F. R. Woolley, who promises his patrons one of the cleanest, up-to-date houses of its kind in the state.

NEW YORK.

The G. and M. Improvement Company of Brooklyn has been incorporated by May Sherry, 209 Throop avenue; Joseph Grodsky, 604 Willoughby avenue; Charles I. Freedman, 60 Throop street. The capital stock is $5,000 and it is the purpose of the new concern to conduct moving picture theaters and other places of amusement.

Permission has been granted P. Rosincon, of Brooklyn, to erect a moving picture theater at 456 Graham avenue, Brooklyn.

Articles of incoporation have been filed for the Eighty-Sixth Construction Company, New York City, by Sol Brill, 209 West One Hundred and Tenth street; Benjamin S. Moss, 556 West One Hundred and Fortieth street; Abraham Vergesslich, 203 West Eleventh street. The capital stock is $50,000 and it is the purpose of the organization to engage in the theatrical and motion picture business.

OHIO.

Albert Bucher is now sole proprietor of the Gem moving picture theater at Columbus Grove, having purchased the interest of his partner, Artie Reppert.

A new moving picture theater will be opened at 391 South High street, Columbus, by Rebecca Pinger, of 303 High street.

The Mark-Brock Enterprise Company of Buffalo will open a moving picture theater in Toledo.

The Orpheum, a vaudeville and moving picture theater of Van Wert, has been purchased by A. J. Harriett.

OKLAHOMA.

The Majestic Moving Picture and Vaudeville theater of Tulsa has been purchased by Robert Stevens, manager of the Lyric theater of that city, who has thoroughly overhauled and improved the same. Mr. Stevens will operate the two houses.

PENNSYLVANIA.

Messrs. Samuel F. Nixon and William Friehofer have commissioned the J. D. Allen Company to prepare plans for an $850,000 vaudeville and moving picture theater to be erected at the northeast corner of Frankford avenue and Margaret street, Philadelphia.

A new moving picture theater has been opened at Milton under the management of Messrs. Wendle and Darling.

The moving picture theater located at 3446 North Thirteenth street, Philadelphia, has been purchased by Messrs. Joseph J. Conway and J. D. Redmond.

TENNESSEE.

The Lookout Amusement Company has been chartered with a capital stock of $32,000 and the officers are as follows: President, L. Llewellyn; vice-president and general manager, Howell Graham; J. E. Johnson, Ross Faxon and J. T. Lupton. The company has been formed for the purpose of consolidating the Theato, Colonial and Bonita moving picture houses of Chattanooga, under one management.

TEXAS.

The Cozy theater is the name of a new moving picture house recently opened to the public at 614 Houston avenue, Port Arthur.

The Majesic, the pioneer moving picture house of Temple, has been purchased by Sid Stone, of Waco, who will continue to operate the same.

UTAH.

The Utah Theater Company has been incorporated at Salt Lake City for the purpose of conducting a general moving picture and vaudeville circuit. The capital stock is $2,000. The company is composed of Frank P. Early, president; Max Florence, vice-president; Daniel Alexander, secretary and treasurer.

WASHINGTON.

The new Lyric theater, just completed at Spokane, has been leased by the Lyric Theater Company for a period of five years for $30,000.

Record of Current Films

Believing the classification of film pictures by the nature of their subjects to be of greater importance to the exhibitor than classification by maker, The Nickelodeon has adopted this style in listing current films. Exhibitors are urged to make use of this convenient tabulation in making up their programs. Films will be listed as long in advance of their release dates as possible. Film manufacturers are requested to send us their bulletins as early as possible. Reasonable care is used, and the publishers cannot be responsible for errors.

LICENSED

Date.	Title.	Maker.	Length.
	DRAMA		
2-13	What Shall We Do with Our Old?	Biograph	994
2-13	A Show Girl's Stratagem	Lubin	1,000
2-13	The Survival of the Fittest	Selig	1,000
2-14	The Rajah	Edison	1,000
2-14	Consuming Love	Vitagraph	
2-15	Catherine Howard	Eclipse	1,005
2-15	Grandmother's War Story	Kalem	975
2-15	A Western Courtship	Pathé	734
2-16	Fisher Folks	Biograph	998
2-16	The Buccaneers	Selig	1,000
2-16	Billy and His Pal	Melies	980
2-17	A Stage Romance	Edison	
2-17	The Lost Ribbon	Kalem	1,000
2-17	When the Light Waned	Vitagraph	
2-17	A Boy's Wit	Pathé	462
2-18	Lieut. Scott's Narrow Escape	Pathé	1,000
2-18	The Cattleman's Daugher	Essanay	1,000
2-18	Saul and David	Gaumont	128
2-18	At the End of the Road	Gaumont	838
2-20	The Diamond Star	Biograph	996
2-20	The Padre	Selig	1,000
2-20	The Test	Lubin	1,000
2-20	A Soldier	Pathé	761
2-21	The Rival Sculptors	Edison	990
2-21	The Plot that Failed	Gaumont	815
2-21	A Tale of Two Cities—Part 1	Vitagraph	
2-22	The Open Road	Kalem	995
2-22	The Golden Sickle	Eclipse	882
2-23	His Daughter	Biograph	997
2-23	My Prairie Flower	Melies	980
2-23	The Seminole's Sacrifice	Selig	
2-24	The Price of Victory	Edison	1,000
2-24	Priscilla and the Pequot	Kalem	925
2-24	A Tale of Two Cities—Part 2	Vitagraph	
2-25	The Outlaw and the Child	Essanay	1,000
2-25	A Tale of Two Cities—Part 3	Vitagraph	
2-25	The Changeling	Pathé	1,000
2-25	Paganini and the Countess Beatrice	Gaumont	998
2-27	The Lily of the Tenements	Biograph	996
2-27	The Eye of Conscience	Selig	1,000
2-28	The Iron Master	Edison	
3-1	Sailor Jack's Reformation	Kalem	1,005
3-1	Comrades	Eclipse	638
3-2	The Heart of a Savage	Biograph	991
3-2	In the Hot Lands	Melies	980
3-2	The Outbreak	Selig	1,000
3-3	The Writing on the Blotter	Edison	
3-3	Mexican Filibusters	Kalem	1,005
3-3	Bertha's Mission	Vitagraph	..
3-3	Satan Defeated	Pathé	750
3-4	On the Desert's Edge	Essanay	1,000
3-4	The Tramp's Find	Gaumont	630
3-4	Jealousy Foiled	Pathé	1,000
3-4	Mammy's Ghost	Vitagraph	
3-6	A Decree of Destiny	Biograph	995
3-6	Vanity and Its Cure	Lubin	1,000
3-6	The Little Shepherdess	Selig	700
3-7	The Little Drudge	Essanay	1,000
3-7	Love and the Stock Market	Edison	1,000
3-7	The Wild Cat Well	Vitagraph	
3-8	The Old Family Bible	Edison	300
3-8	Red Deer's Devotion	Pathé	1,000
3-8	The Fury of a Woman Scorned	Eclipse	720
3-9	Conscience	Biograph	995
3-9	The Medallion	Selig	1,000
3-9	The Snake in the Grass	Melies	980
3-10	How Bella Was Won	Edison	1,000
3-10	The Mission Carrier	Kalem	1,000
3-10	Undying Love	Pathé	720
3-11	His First Sweetheart	Gaumont	560
3-11	A Lonely Little Girl	Pathé	1,000
3-11	Red Eagle	Vitagraph	
3-13	The Code of Honor	Selig	1,000
3-14	All For the Love of a Lady	Edison	990
3-14	The Sword and the Cross	Gaumont	840
3-15	The Department Store	Edison	625
3-15	Redemption	Eclipse	508
3-16	Was He a Coward?	Biograph	994
3-16	The Schoolmarm of Coyote County	Melies	980
3-16	The Man From the East	Selig	1,000
3-17	The Wedding Bell	Edison	1,000
3-17	A War-Time Escape	Kalem	980
3-17	The Aching Void	Vitagraph	
3-17	The Inventor's Rights	Pathé	784
3-18	The Faithful Indian	Essanay	1,000
3-18	The Privateer's Treasure	Gaumont	860
3-18	The Sheriff's Daughter	Pathé	1,000
	COMEDY		
2-13	Betty's Apprenticeship	Pathé	689
2-14	Getting Sister Married	Essanay	1,000
2-14	The Reformation of the Suffragettes	Gaumont	665
2-15	The Ransom of Red Chief	Edison	
2-16	Getting Even	Lubin	600
2-16	Schultz Has the Smallpox	Lubin	400
2-17	Whiffle's Double	Pathé	499
2-18	The New Stenographer	Vitagraph	
2-21	Their Wedding Gifts	Essanay	580
2-21	Just as the Clock Struck Nine	Essanay	412
2-22	Mr. Bumptious, Detective	Edison	990
2-22	Hubby's Troubles	Pathé	672
2-23	Dobbs, the Dauber	Lubin	1,000
2-24	Who Killed Max?	Pathé	689
2-24	An Escape of Gas	Pathé	302
2-27	Nan's Diplomacy	Lubin	1,000
2-27	Max Makes Music	Pathé	403
2-27	Pots, Pans and Poetry	Pathé	531
2-28	Taming a Tyrant	Essanay	1,000
2-28	Matrimonial Epidemic	Gaumont	813
2-28	Captain Barnacle's Courtship	Vitagraph	
3-1	Rival Candidates	Edison	
3-1	Oh, You Clubman!	Pathé	1,000
3-2	Father's Birthday Ring	Lubin	700
3-2	Woman's Curiosity	Lubin	300
3-4	Forbidden Cigarettes	Gaumont	335
3-6	Max Embarrassed	Pathé	600
3-6	An Oriental Abduction	Selig	300
3-6	After the Boxing Bout	Pathé	375
3-7	The Barber's Daughter	Gaumont	505
3-7	The Ambitious Bootblack	Gaumont	450
3-8	A Night of Terror	Edison	700
3-8	The Irish Honeymoon	Kalem	950
3-9	His Friend the Burglar	Lubin	1,000
3-10	The Bridegroom's Dilemma	Vitagraph	
3-11	The Romance on "Bar O"	Essanay	1,000
3-13	Max's Feet Are Pinched	Pathé	489
3-13	Comrades	Biograph	998
3-13	The Actress and the Singer	Lubin	1,000
3-14	Oh, You Teacher	Essanay	1,000
3-14	Betty Becomes a Maid	Vitagraph	
3-15	Baby's Fall	Edison	375
3-15	The Hunter's Dream	Kalem	365
3-15	Oh, You Kids!	Pathé	690
3-16	Mandy's Social Whirl	Lubin	1,000
3-18	Davy Jones, or His Wife's Husband	Vitagraph	
	SCENIC		
2-13	Pineapple Cannery in China	Pathé	315
2-14	Land Marks of Avignon	Gaumont	338
2-22	Felling a Smoke-Stack	Eclipse	113
2-22	Province of Laos, Indo-China	Pathé	321
3-1	Beauties of San Souci	Eclipse	362
3-3	Around Constantina, Algeria	Pathé	200
3-8	The Beautiful Wye Valley	Eclipse	300
3-11	The Beautiful Gorges of Tarn	Gaumont	415
3-10	Regatta Along the Mekong River	Pathé	220
3-14	Breakers In the Clouds	Gaumont	155
3-15	The Thames From Richmond to Oxford	Eclipse	472
3-18	Rocky Caves of France	Gaumont	110
	INDUSTRIAL		
3-15	The Diver	Kalem	565
	SCIENTIFIC		
2-15	The Axolotl	Pathé	266
2-21	Pictures in Chemistry	Gaumont	175
	SPORTS		
2-20	A Buffalo Hunt	Pathé	236
2-28	Lafont and Pola's Last Flight	Gaumont	185

DAILY LICENSED RELEASES.

MONDAY: Biograph, Lubin, Pathé, Selig.

TUESDAY: Edison, Essanay, Gaumont—Kleine, Vitagraph.

WEDNESDAY: Edison, Kalem, Eclipse—Kleine, Pathé.

THURSDAY: Biograph, Lubin, Melies, Selig.

FRIDAY: Edison, Kalem, Pathé, Vitagraph.

SATURDAY: Essanay, Gaumont—Kleine, Pathé, Vitagraph.

INDEPENDENT

Date.	Title.	Maker.	Length.
	DRAMA.		
2-13	The Elixir of Bravery	Eclair	424
2-13	Her Darkest Hour	Imp	1,000
2-13	Condemned to Death	Yankee	
2-14	For Her Sake	Thanhouser	
2-14	The Deputy's Honor	Bison	900
2-15	Coals of Fire	Atlas	
2-15	Three Men	Reliance	900
2-15	The Light Beyond	Nestor	1,000
2-15	The Demon	Ambrosio	900
2-16	In the Iand of Cactus	American	1,000
2-16	The Convert	Imp	1,000
2-16	A Heroine of '76	Rex	910
2-16	The Fatal Charm	Itala	900
2-17	Checkmate	Thanhouser	
2-17	Bronco Bill, the Brave Cowboy	Lux	639
2-17	The Warrior's Squaw	Bison	900
2-18	Under Southern Skies	Powers	
2-18	The Life of a Muschik	Great Northern	
2-18	Souls Courageous	Reliance	900
2-20	The College Spendthrift	American	900
2-20	The Heart of a Warrior	Eclair	683
2-20	Pictureland	Imp	1,000
2-20	A Lifetime Penance	Yankee	
2-21	For Washington	Thanhouser	
2-21	The Way of the Red Man	Bison	900
2-22	The Redeeming Angel	Ambrosio	500
2-22	The Old Man and Jim	Champion	950
2-22	A Plain Tale	Reliance	900
2-22	His Father's House	Nestor	1,000
2-23	Strategy	American	980
2-23	Artful Kate	Imp	1,000
2-23	The Story of a Prayer Rug	Rex	
2-23	Little Souls	Itala	900
2-24	The Fate of Joe Dorr	Bison	900
2-24	A Child's Prayer	Lux	534
2-24	Love's Test	Solax	
2-24	A Newsboy Hero	Thanhouser	
2-24	The Woman Who Dared	Yankee	
2-25	Across the Mexican Border	Powers	
2-25	Tangled Lines	Reliance	900
2-25	His Great Duty	Great Northern	
2-27	The Sheriff's Sweetheart	American	800
2-27	Punch	Eclair	595
2-27	All for Gold	Yankee	
2-27	A Manly Man	Imp	1,000
2-28	The Call of the Heart	Powers	950
2-28	The Little Mother	Thanhouser	
2-28	A Warrior's Faith	Bison	900
3-1	A Western Girl's Choice	Champion	950
3-1	The Trump Card	Reliance	900
3-1	The Professor's Romance	Nestor	990
3-1	The Trump Card	Reliance	900
3-2	Nina's Doll	Itala	900
3-2	College Chums	American	975
3-3	Stage Struck	Thanhouser	
3-3	Owanee's Great Love	Bison	900
3-3	Jack's Lucky Horseshoe	Lux	530
3-4	From the Valley of Shadows	Reliance	900
3-4	Home Sweet Home	Powers	950
3-4	The Rival Servants	Great Northern	
3-6	Memories	American	375
3-6	King Phillip and the Templars	Eclair	975
3-6	Tracked	Imp	1,000
3-6	Angel of the Bowery	Lux	
3-7	The Mummy	Thanhouser	
3-7	Dick Farrell's Prize	Bison	900
3-8	In the Commissioned Ranks	Nestor	
3-8	A Trick of Fortune	Reliance	900
3-8	Out of the Arctic	Solax	
3-8	The Vindication of John	Champion	950
3-8	Prisoner of Caucasus	Ambrosio	900
3-9	The Rich and the Poor	American	1,000
3-9	The Message in the Bottle	Imp	1,000
3-9	Nobility	Itala	900
3-9	The Fall of a Knight	Rex	958
3-10	The Senorita's Sacrifice	Lux	
3-10	The Spirit Hand	Thanhouser	1,000
3-10	Her Prisoner	Bison	900
3-11	The Son of the Executioner	Great Northern	
3-11	Ever the Accuser	Reliance	900
3-11	A Gamble With Love	Powers	
3-13	The Secret of the Palm	Imp	1,000
3-13	The Test of Love	Yankee	
3-14	His Younger Brother	Thanhouser	
3-15	Come Unto Me	Reliance	900
3-15	The Girl and the Oath	Champion	950
3-15	Was It Worth While?	Nestor	1,000
3-16	The Fisher Maid	Imp	1,000
3-17	Robert Emmet	Thanhouser	
3-17	His Double Treasure	Yankee	
	COMEDY		
2-13	A Quiet Evening at Home	American	1,000
2-13	Mr. Faddleaway is on Strike	Eclair	522
2-14	An Unforeseen Complication	Powers	
2-15	Her Three Proposals	Champion	950
2-17	Corinne in Dollyland	Solax	
2-17	Her Birthday Surprise	Yankee	
2-21	What Would You Do	Powers	
2-17	Matilda Lovestruck	Lux	272
2-18	Who Will Eat the Turkey	Itala	900
2-18	The False Alarm	Great Northern	
2-22	Tweedledum Is Shy	Ambrosio	500
2-24	Matilda Chased	Lux	354
2-25	Foolshead's Present	Itala	500
2-25	The Havana Cigar	Itala	500
2-27	The Silence System	American	200
2-27	Beware of the Bomb	Eclair	370
3-1	Tweedledum, Aviator	Ambrosio	900
3-2	By the Light of the Moon	Rex	900
3-2	The Dynamiters	Imp	500
3-3	A Costly Pledge	Solax	
3-3	The Abandon of Parson Jones	Yankee	
3-3	On Their Honeymoon	Lux	400
3-4	Coto and the Flag	Itala	500
3-4	Foolshead, More Than Usual	Itala	500
3-6	Hypnotizing a Hypnotist	American	615
3-7	When Masons Meet	Powers	
3-7	The Bandit's Surprise	Powers	
3-10	Bill In Love Again	Lux	432
3-10	Jones' Remedy	Lux	524
3-10	Put Out	Solax	
3-11	A Gamble With Love	Powers	
3-11	Foolshead Shooting	Itala	900
3-13	An Unforseen Introduction	Eclair	500
3-13	A Day of Storms	Eclair	400
	SCENIC.		
2-20	Hospital for Small Animals	Eclair	286
2-21	The Mexican Centennial	Powers	
3-2	Army Maneuvers in Cuba	Imp	500
	SPORTS		
3-10	Caribou Hunting	Solax	

DAILY INDEPENDENT RELEASES

MONDAY: American, Eclair, Imp, Yankee.

TUESDAY: Bison, Powers, Thanhouser.

WEDNESDAY: Ambrosio, Champion, Nestor, Reliance.

THURSDAY: American, Imp, Itala.

FRIDAY: Bison, Lux, Solax, Thanhouser, Yankee.

SATURDAY: Great Northern, Itala, Powers, Reliance.

THE NICKELODEON

$2.00 Per Year | Published Weekly by ELECTRICITY MAGAZINE CORPORATION, Monadnock Building, Chicago | 10 Cents Per Copy

Vol. V | CHICAGO, MARCH 18, 1911 | No. 11

The Nickelodeon

Published Every Saturday by the

ELECTRICITY MAGAZINE CORPORATION

MONADNOCK BUILDING, CHICAGO

Long Distance Telephone: Harrison 3014

Ed J. Mock and Paul H. Woodruff, Editors James B. Crippen, Associate Editor

New York Office: 1433 Hartford Bldg., 41 Union Square
LAURENCE F. COOK, Eastern Representative
Telephone, Stuyvesant 1672

London Office: 36 Maiden Lane, Covent Garden
S. RENTELL & CO., Representatives

Table of Contents

TERMS OF SUBSCRIPTION

United States, Cuba and Mexico, $2.00 per year; Canada, $2.50 per year; Foreign countries within the Postal Union, $3.00 per year; Single Copy 10 cents.

Distributing Agents: The Western News Company and its International Branches.

NOTICE TO ADVERTISERS

Changes of advertising copy should reach the office of publication not less than five days in advance of date of issue. Regular date of issue, Saturday of each week. New advertisements will be accepted up to within three days of date of issue, but proof of such advertisement can not be shown.

NOTICE TO SUBSCRIBERS

Remittances should be made by check, New York draft or money order, in favor of THE NICKELODEON. Foreign subscriptions may be remitted directly by International Postal Money Order, or sent to our London office The old address should be given as well as the new, and notice should be received two weeks in advance of the desired change.

Scene from the Eclipse-Kleine Feature Film, "The Last Edict of Louis the Second of France."

THE NICKELODEON

AMERICA'S LEADING JOURNAL OF MOTOGRAPHY

VOL. V | CHICAGO, MARCH 18, 1911. | No. 11

GET TOGETHER, EXHIBITORS!

"ORGANIZATION" has become the slogan of thousands of exhibitors since the appearance of our editorials on that subject in THE NICKELODEON for February 4 and March 11. As corroborating our statement of the vital necessity for a national exhibitors' association, we print on another page a letter from M. A. Neff, president of the Exhibitors' League of Ohio. Mr. Neff's earnest appeal to other exhibitors will awaken any but the most self-centered and benighted of theater managers to an appreciation of their true condition.

Exhibitors, if you would gain even the ordinary commercial rights which should be yours, you must organize. If you would retain even those few rights which you still have, you must organize. It is not a matter merely of social intercourse among the trade, although that would be beneficial. It is not even a matter of correcting false competitive conditions, although such correction is badly needed. It is a matter of preserving your business rights and prerogatives, of establishing yourself as business men of initiative. As conditions are now you are merely the human agency through whom the motion picture manufacturer shows to the public such pictures as he, and he alone, thinks best to offer.

Through you, exhibitors, comes all the money to support this gigantic industry. We hear of a total investment in the business of perhaps $150,000,000, on which investment bigger returns are paid than perhaps in any other business. And where do these returns come from? Who maintains this investment of $150,000,000? The nickels and dimes of the public are given not to the manufacturer or renter, but to you. You are, in the public eye, responsible for your show. It is to you the people look for their entertainment. It is on you that the manufacturer and renter depend for their bread and butter.

As an exhibitor, solitary and unsupported, your feeble voice cannot carry your protest beyond your own doors. As a member of a national organization, whose sole purpose would be to render to the exhibitor that which is rightfully his, you would be all-powerful, and in your trade your word would be law.

You must organize!

The Exhibitors' League of Ohio is making progress. As President Neff says, it is growing bigger every twenty-four hours. Read Mr. Neff's open letter to exhibitors, and then read the constitution and by-laws of the Exhibitors' League, which we publish on another page. You, too, can start an organization like this and once started the movement will cross the country like wild fire.

Last week we made an offer to organizers. We repeat it here without further comment:

We will furnish any exhibitor, who will supply satisfactory evidence of his sincerity of purpose, with a list of all the picture theaters in his state or group of states. Such lists will be furnished without cost to the organizer, the only condition being that he guarantee to use them for that purpose and for no other, and that he report to us his progress in the formation of local associations. And once the local associations are formed it will be a comparatively simple matter to combine them into one strong national body. Organizers, let us hear from you.

THE NICKELODEON'S REINCARNATION.

AS we pass the middle of the month of March, THE NICKELODEON begins to feel, as the old novelists used to say, "the pangs of approaching dissolution." But Brother Hoff of the *Film Index*, in "heaving a sigh" over our departure, avoided mentioning the resurrection, or rather reincarnation. Therefore we feel called upon once more to explain the situation.

Brother Hoff is wrong when he says that we characterized our more successful contemporaries as puny organs. The only thing we characterized as a puny organ was the *Film Index;* and we have never regarded that as a contemporary. The best thing that can be said about the *Index* is that it has become a frank imitation of THE NICKELODEON. The *Film Index* is owned body, soul and breeches by licensed film manufacturers, and a house-organ of this sort can never be a contemporary of a genuine trade publication. Brother Hoff knows as well as we do that without this subsidized support the *Film Index* would never get anywhere. We must in good faith give its publishers credit for making a very presentable sheet out of pretty poor material. One of its owners, indeed, told us not long ago that THE NICKELODEON had "cost the *Film Index* a good deal of money—it had even forced it to put on a cover!"

And in passing we assure the *Index* editor that we appreciate the joke about being chloroformed by the independents. Have a smile with us, Brother Hoff.

But to return to *Motography,* THE NICKELODEON'S reincarnation. Make no mistake about this. **Motography** will not be a continuation of THE NICKELODEON. It will be a monthly technical journal—the biggest, brightest and best publication ever seen in the motion picture field. We published THE NICKELODEON monthly for a year, and what we did in that year is still the talk of the trade. *Motography*, with the experience gained by THE NICKELODEON'*s* staff, plenty of time to prepare unusual and vital articles for every number, and means to secure those articles, regardless of expense, will surpass anything ever before attempted in this line.

The bane of the motion picture industry is too much politics. Into the maelstrom of petty disputes and commercial unreliability a weekly publication cannot help being dragged. That is the advantage of the monthly paper. It can and will confine its efforts

solely to raising the dignity and expanding the usefulness of its industry. Our aim and intention is to make *Motography* so good that every man in the field will be proud of it. And we can do it.

NEWSPAPER TOMMYROT.

As an example of the silly lengths to which a newspaper reporter will go in his effort to make a sensational story and incidentally cast discredit on motion pictures, behold the following which appeared in the Pittsburg (Pa.) *Dispatch* of March 2.

As a preliminary it must be explained that a man by the name of Israel Chetlen had committed suicide in a nickel show. That is the one indisputable fact in the case. It is supposed that he did so under the influence of a suicide scene which appeared on the screen. On this assumption the reporter propounds a theory that the said Chetlen was a "victim of auto-hypnotic suggestion," superinduced by the film picture. Then he weaves this fancy fabric of fiction:

"Startling tests were made yesterday to verify this belief (that the suicide was a victim of auto-hypnotic suggestion). Two ex-convicts were taken to a nickelodeon by the police inspector and specialists. One of the men had served part of a sentence in a Western penitentiary for murder, and another had become a thief after his wife proved unfaithful.

"The ex-convict who had committed murder was intensely excited and almost violent when a picture was shown depicting a burglar who had been apprehended making an attempt to escape from his captors. When revolvers were drawn the spectator seized the back of the chair in front of him. The muscles of his face twitched. There was a remarkable dilation of the eye pupils, followed by a general twisting and contorted condition of the entire body. Great beads of perspiration gathered on the man's forehead, and for a time he was, from all appearances, completely hypnotized and mentally was enacting the part played by the captured burglar in the picture.

"Almost a counterpart of the actions of the husband of the unfaithful wife who had been discovered was enacted when this picture was displayed on the screen. The man in the audience, who was under the observation of Inspector Bartley and the two scientists at first showed all the poignant grief and despair of an outraged husband who discovers his home has been wrecked by a supposed friend.

"As the scenes rapidly followed and the story was mutely told, the man under observation, who had suffered similar agony, became almost a maniac. It was with difficulty that he was at times restrained. Half a dozen nickelodeons were visited and the same results were obtained in all of them."

Later this ingenious theorist suggests that seventy-five per cent of the people who frequent motion picture theaters are mentally affected.

We shall spend no time refuting this nonsense because it is transparently mendacious to all who are as intimate with films and theater conditions as our readers. But what must be the effect on the general public of such an alarming article appearing in the columns of a reputable (as far as we know) newspaper? It is bound to give a distorted impression and create distrust of the motion picture. It will inspire pulpit denunciations and afford a lively topic for women's clubs and mothers' meetings. It will provide ammunition to all those forces that have long been hostile to the motion picture. And it is simply false.

Why does the newspaper print such invidious fiction? Because it, too, is hostile to the motion picture. The motion picture playhouse, in killing the old melodrama theater, deprived the newspapers of much profitable advertising. Consequently they are not kindly disposed toward the cause of their diminished revenue. And again, the newspapers are always inclined to take a strong moral stand on any subject when it costs them nothing. It helps to regain some of the prestige they have lost in their traffic with commerce and politics.

Ever since its inception the motion picture has been the helpless scapegoat of this powerful antagonist. In the bad old days of the industry much of the newspaper abuse and derision were doubtless deserved, but unprejudiced observers agree that this is so no longer. The motion picture industry has established itself on a basis of permanency and is following ideals which should command respect. The persistent progress accomplished by the film makers during the past year has wrought a change in public opinion which many newspapers are already echoing. But there is still a belated cohort of newspapers who continue to bawl their anvil chorus. Among this group, the Pittsburg *Dispatch* holds first place by right of the preposterous article which we have quoted.

A CHANGE OF HEART TOWARD SCENICS.

A curious commentary on the changing attitude of the average exhibitor toward the use of educational and scenic pictures is afforded by a letter recently received by George Kleine. Kleine is now issuing scenic posters, instead of dramatic posters, with appropriate subjects. Before taking this step he felt out the trade on the matter, and the following is a reply written by Mr. Buckwalter of the Denver General Film:

> The writer is of the opinion that this will prove very popular owing to the rapidly increasing demand in this vicinity for educational, scenic, and industrial subjects. It is a somewhat singular fact that two months ago we received many abusive as well as decidedly annoying letters from customers almost every time we sent out an Urban or Gaumont scenic or educational film. The writer does not remember ever having received so many offensive communications for any single subject before. For several weeks past the Denver Auditorium has been making a phenomenal success of pictures of exactly this nature, and as a result the outside exhibitors are beginning to realize that they made a serious mistake in condemning these classes of films; and now they are beginning to demand exactly what they denounced only a few weeks ago. I personally believe the Eclipse scenic subjects are most wonderfully entrancing, and the fact that the Auditorium success is based very largely on them explains better than I can how and why the change has taken place.

This bears out the statement we made long ago that the exhibitor needs but to be awakened to the value of scenic and educational subjects to demand them rather than avoid them. The public wants such subjects—nay, yearns for them. The manufacturers have them, yet complain that they cannot sell them. In between, like a wall, are the foolish renter and the more foolish exhibitor. These factors, however, are becoming less and less and before long we expect to see every exhibitor clamoring for scenic and scientific subjects even to the exclusion of the mediocre dramatic and comedy pictures.

Montana's Chain of Picture Theaters

By Charles F. Morris

BUTTE, Montana, is the home of as enterprising a chain of picture theaters as ever furnished entertainment to a whole city. The chain is operated by the Montana Amusement Company, whose growth and success since its inception little more than a year ago forms one of the most remarkable features in the story of a marvelous industry.

So unusual has been this example of rapid growth that the company has managed to secure a great deal of valuable newspaper publicity, all of which has helped the good work along. In short, the people of Butte, and indeed of all Montana, are proud of the Montana Amusement Company, and are not ashamed to show it.

Between January 15, 1910, and the same date in 1911, more than 2,500,000 men, women and children have sought and found wholesome and economical amusement in the pictorial and vaudeville houses now

One of the Company's "Alcazar" Theaters.

controlled and operated by this phenomenally successful institution.

Astonishing indeed to the layman is the information given out by this company to the effect that 3,000,000 feet of motion picture films were shown in its theaters during the year, which, if placed end to end, would extend from New York to London and back again and which comprised 49,950,000 separate photographs—figures almost beyond the comprehension of the human mind.

Intimately known to but few of its patrons, the Montana Amusement has developed during the short period of one year into a formidable business industry and has with giant strides gradually and healthfully passed from a one-theater enterprise to a nine-theater corporation, from employes numbering 10 to the little army of 125, and from an annual payroll of $8,500 to the gigantic total of $110,000.

The Montana Amusement Company, which began operations in Butte a little more than a year ago, is to-

Another Montana Amusement Company House—the Imperial.

day in control of a chain of profitable houses extending from Billings on the east to Butte on the west and to Great Falls on the north.

In Butte the average weekly attendance at the houses controlled only by this company aggregates 28,000 persons, this figure including the liberal patronage being accorded to the reorganized New Empire theater, which only seven weeks ago passed into the hands of the Montana Amusement Company, and which, under the Aladdin-like touch of capable management, has already become what is undoubtedly the Treasure State's foremost vaudeville house.

While the amusement company has recently brought high-class vaudeville within its broad scope of entertainment offerings, the chief source of revenue is derived from its vast motion picture interests. What is one of the handsomest moving picture houses in America is the recently completed Imperial Theater in

Alcazar" Is a Popular Name in Montana.

Butte. Known as "The House of a Thousand Lights and Mirrors," this magnificent theater stands as a monument to the growing popularity of this form of amusement and bespeaks for the Montana Amusement Company and for Butte the high favor in which a superbly appointed motion picture emporium is held by local theatergoers. The Imperial is the only moving picture house in the country equipped with a solid mirror lobby and exclusive leather divan seating facilities. A detailed description of the Imperial is reserved for individual publication in a later issue.

The Alcazar theatorium in Anaconda is now being remodeled and will be similarly arranged. Like the Imperial, the Anaconda house will take first rank among the most costly photoplay theaters in the country and will add but another mark of distinction to this rapidly growing enterprise.

No industry in the world is undergoing so rapid an evolution as this marvellous system of visualization, and nothing is becoming more potent as an educational factor in the lives of all classes.

Professor Frederick K. Starr, of Chicago University, who is one of the nation's most eminent educators, recently said anent this industry:

"The moving picture is not a makeshift, but the highest type of entertainment in the history of the world, because it stands for better Americanism. Its value cannot be measured now, but another generation will benefit more largely through its influence than we of today can possibly realize."

Professor Starr is right and the people of Montana know that he is right. The many thousands of patrons of the Montana Amusement Company have, at an infinitesimal cost, been taken to every country in the world by means of the motion picture. They have visited every city of mentionable size and they have seen every nationality. They have laughed and they have wept at the faithful depiction of life as it existed a thousand years ago and as it is today. They have watched the course of the ravages of disease and have learned much concerning medical science. To London, Paris or New York in the twinkling of an eye is but one of the marvellous feats of the motion picture, and the camera does not lie. The people have ceased to marvel at the wonders of the photoplay, but they have not ceased to be subtly and oftentimes unconsciously influenced, educated or amused.

The Montana Amusement Company, with a capital stock of $200,000, is what might be termed a close corporation. The stockholders, officers and directors are F. T. Bailey, president; George H. Grombacher, secretary-treasurer, and William Cutts, general manager. These three men have watched carefully over the destinies of the amusement field in Montana and have seen their own enterprise grow out of its swaddling clothes and assume its present proportions.

Gradually but cautiously these local motion picture pioneers have reached out and have grasped many promising sites and locations, until their interests have attained state-wide dimensions. The failure of a motion picture theater is generally a direct result of inefficient management, and even then does one rarely hear of insolvency. That the affairs of the Montana Amusement Company are being efficiently managed is reflected in the present magnitude of the enterprise.

Two of Butte's four moving picture theaters, the American and Park, are operated by the Montana Amusement Company, of which William Cutts is manager. The other two, the Alcazar and Orpheum, are operated independently, the former under the management of J. F. Stone and the latter under the management of Castro Brothers. Six shows are given daily in all four theaters.

The American has a seating capacity of 200 persons. Originally, it was operated by the Dreamland company and was taken over by the Montana Amusement Company several months ago. Within a month it is planned to make it one of the finest moving picture theaters in the west. The improvements contemplated include new divan opera chairs, such as no similar house in the west is equipped with. In renovating the lobby of the theater alone it is planned to spend $2,000.

Improvements also are planned for the Park theater on East Park street. New chairs similar to those to be placed in the American will be installed. The Park has a seating capacity of approximately 260 persons. Both theaters are equipped with the latest and most up-to-date moving picture machines which do away with the flicker and other objectionable features in the presentation of motion pictures. Nothing but the latest films are shown and under the present system there is no chance of duplication.

The Alcazar theater bears the distinction of being one of the three theaters in the west to install a mirror screen which gives a depth of focus to the pictures that adds greatly to their realism. The mirror screen is a huge frosted plate glass mirror 10 feet wide and 14 feet in length. It is larger than the majority of the plate glass windows in the city, and cost in the neighborhood of $1,000 to install. The Alcazar uses independent films. A huge ventilating fan, which will change the air in the theater every minute and a half, is being installed.

The Orpheum is one of the older of the moving picture houses. It too is equipped with the latest motion picture machines and all of the things that add comfort to amusement house patrons. The Orpheum uses licensed films under the system which insures that there will be no duplication in Butte.

What, in the light of past achievement, the Montana Amusement Company will add to its holdings during the present year will best be written in the history of 1911. It is predicted by the most conservative that the story will be both interesting and one of continued success.

Asylum Patients See Films

Five hundred patients and 200 employees of the Central Kentucky Asylum for the Insane at Lakeland recently enjoyed their first view of motion pictures, thrown on the screen in the amusement hall at the asylum. The views were of a comic nature, and delighted both patients and employes. Some of the patients laughed out when the ludicrous situations were unfolded.

Dr. W. E. Gardner, superintendent, said that it was the intention to have these exhibitions at least once each week in the future. They will be used as a part of the treatment given his charges and serve to withdraw their attention from their own troubles and supply much diversion. Comic and scenic films will be used here, as they have been at a few asylums in other parts of the country.

New Amusement Patents

By David S. Hulfish

It will be the purpose of this department to list all United States patents, as they are issued, which pertain to any form of amusement business, giving such data in each case as will enable the reader to judge whether he wishes to see the complete darwings and specifications of th patent. When patents of special interest to The Nickelodeon readers are encountered, the descriptive matter herein will be amplified accordingly. A complete copy of drawings, specifications and claims of any patent listed will be furnished from this office upon receipt of ten cents.

No. 971,891. Motion Picture Machine. Gustav E. Hoglund, Chicago, Ill., assignor to Selig Polyscope Company, of same place.

In this improved camera (or projector) the element of improvement is found in the intermittent mechanism. The stated object of the patent is to provide "a construction in which a slight displacement of the parts by usage will not render the operation of the chain of mechanism imperfect." In short, a machine which does not require a close adjustment to obtain satisfactory results.

The general type of intermittent mechanism adopted to obtain this end is the type which Cecil M. Hepworth has named the "Ratchet and Pawl Spring Escapement." Mr. Hepworth describes it lucidly in the following paragraph, quoted from his book, "The A B C of the Cinematograph":

> Suppose a ratchel wheel to be loosely placed upon a spindle, so that it is free to turn upon it; then suppose it to be attached to the spindle by means of a spiral spring wound upon the latter, so that the spindle will turn to a certain extent even when the wheel is held stationary by a pawl, and in doing so, of course, winds up the spring; then, when the pawl is lifted from the teeth of the ratchet wheel, that wheel will fly round rapidly until the spring is unwound again as before.

Mr. Hoglund's improved camera is shown in two illustrations accompanying this review, being Figs. 2 and 6 of the patent as issued.

Referring first to Fig. 6, there may be seen the ratchet wheel *41* upon the spindle *40*, the wheel having four teeth *42*. The pawl is the irregular part *32*, sliding with its slots *38* and *38* upon the fixed guide pins *39* and *39*. The pawl is propelled by the continuously moving cam *30* upon the driving shaft shown in section through the middle of the cam *30*, and the cam propels the pawl by working against the sides of the opening *31* of the pawl. The pawl has also the teeth

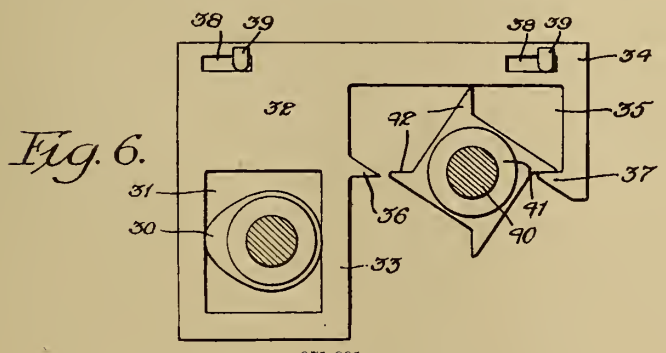

971,891.

36 and *37* which are adapted to engage the teeth *42* of the ratchet wheel.

As the cam *30* propels the pawl *32* to the right, the pawl tooth *37* is withdrawn from the ratchet tooth at the right, releasing the spring pressed ratchet to turn in a direction similar to that of the hands of a clock, until its lower and unnumbered tooth engages the pawl tooth *36*.

This ratchet of four teeth is the equivalent of the star wheel of the Geneva movement, and it will be noted that each time a ratchet tooth slips from a pawl tooth the star wheel or ratchet wheel will make a sudden jump of one-quarter of a revolution, just as the star of the Geneva jumps when the pin hits it.

Referring to Fig. 2, the crank handle *9* turns the main drive shaft *8*, upon which is sleeved loosely the

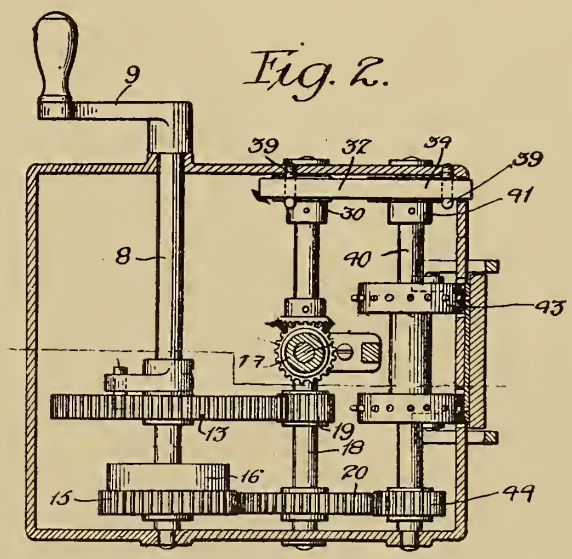

971,891.

gear wheel *15*; the box *16* contains Hepworth's "spiral spring," which is wound upon the shaft *8*, one end being attached directly to the shaft *8* and the other end being attached to a pin driven into the gear wheel *15*. The idler gear *20* transmits the tension of the spring in the box *16* to the gear *44* upon the spindle *40* which carries both the ratchet or star wheel *41* and the intermittent spocket wheel *43*.

The main drive shaft *8* also carries the gear wheel *13* which drives the gear *19* upon the spindle *18* which carries the release cam *30* driving the pawl *32* to release the star wheel to shift the film.

The idler wheel *20* is sleeved loosely upon the shaft *18*.

No. 971,898. Motion Picture Machine. Jeremiah Keller, Chicago, Ill., assignor to Selig Polyscope Company, of same place.

In moving picture machines considerable danger is entailed from fire and explosion, due to failure to stop the machine quickly in case of breakage of the film, in which case a continued feeding of the film into the machine causes it to bunch up in front of the lens or lamp, becoming overheated, and finally igniting and burning fiercely, or even exploding. The dangers arising from allowing any portion of the film to remain a considerable time before the lens, or in the path of the warm rays of light, have been heretofore appreciated, and to this end, shutters, known as fire-shutters, have been devised, their purpose being to shut off the light from the film when the rate of feeding falls below a certain predetermined value. But the above mentioned danger due to the breakage of the film, is not over-

come by the use of such shutters or other devices with which I am familiar.

The object of the present invention is to provide a simple, certain, and effective device for stopping the machine in case of such breakage of the film, or reduction of the tension on it.

After the brief description of the general purpose of the invention, as quoted above, the inventor describes his mechanism. Near the usual fly-wheel *6* of the motion picture projecting head is a brake shoe *8* pivoted at *9*, and connected with a spring *10* which may be such that when the brake is in normal position the spring tends to force the brake away from the fly-wheel, but when a slight movement of the brake shoe toward the wheel is made the spring will reverse the direction of pressure upon the brake, pressing it then down upon the fly-wheel.

In normal position, an arm *11* attached to the brake rests against the stop *12*.

In the illustration, the film passing through the film gate is shown by the double dotted line *31*. Upon this film under tension rests the spring pressed device *19*, pressing against the film with the roller *28*. In case the film should break, the spring pressed member *19* would be permitted to move toward the left, its part *17* would strike the part *18*, moving the arm *13* and pin *14* to move the arm *11* to throw the brake shoe *8* against the fly-wheel *6* and to stop the motion head.

Concerning the nature of the engagement of the spring pressed member with the "taut film" the patent is very general, and concerning the particular portion of the film with which contact is to be made the patent says nothing. The type of motion head most generally used does not provide any such facility, since

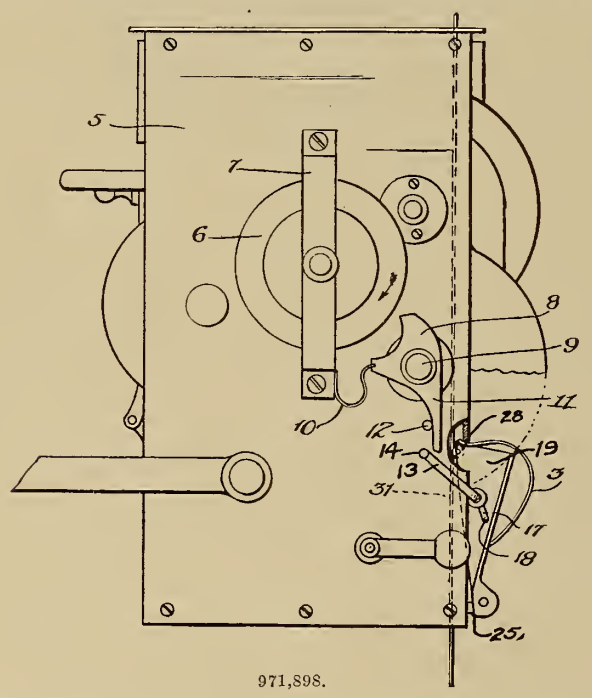

971,898.

all parts of the film within the motion head are alternately taut and loose, save for the friction of the film gate springs.

The claims cover the invention very broadly. They are six in number, of which the first is typical:

1. In brake mechanism for moving picture machines, a brake wheel positively connected with the film driving mechanism, and a tripping brake adapted to engage the brake wheel when tripped, in combination with automatic means for tripping the brake when the tension on the film is reduced, substantially as described

No. 972,142. Motion Picture Machine. Edward H. Sperberg, Chicago, Ill., assignor to Selig Polyscope Company, of same place.

The improvement is found in a departure from custom in framing devices. The intermittent sprocket is loose on the intermittent shaft, and an adjustable connection between the sprocket and the shaft permits it to be adjusted to any angle desired.

The patent has but one claim, and this claim, in connection with the illustration accompanying, Fig. 1 of the patent, will explain the mechanism used:

The combination, with a film driving shaft having a helical channel in its surface, of a film driving sprocket rotatably mounted thereon and provided with a longitudinal keyway adjacent to the shaft, a sleeve on the shaft, having an annular

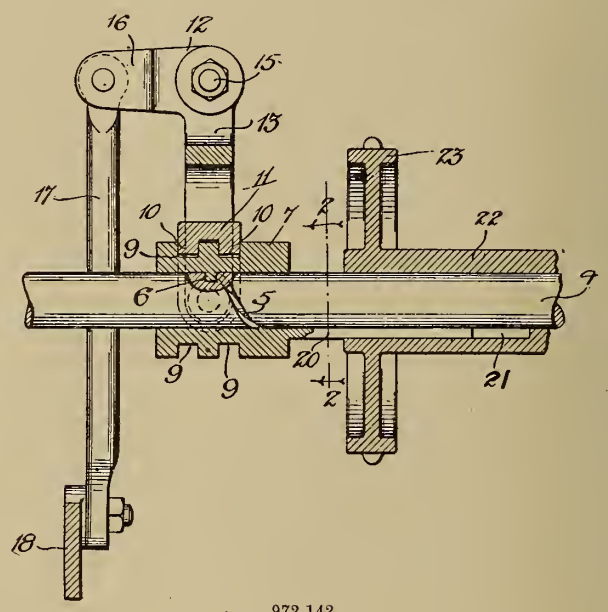

972,142.

groove in its outer periphery, a key on its inner portion for engaging the channel of the shaft, a longitudinal feather key for engaging the keyway of the sprocket, and means engaging the annular groove, for moving the sleeve longitudinally with respect to the shaft, whereby the sleeve, feather key, and sprocket are rotated with respect to the shaft, substantially as described.

Films Popular in Chicago

Chicago people are strong supporters of the moving picture shows. There are 550 moving picture theaters in Chicago and fifty vaudeville houses which exhibit them in their performances. An estimate of the daily attendance at the moving picture shows is difficult to obtain, but 150,000 is considered a minimum. As some of the theaters charge only 5 cents admission, while others charge 10 and some 15 cents, an average admission price of 8 cents is considered fair. At this rate Chicago spends $12,000 daily.

Ah There, Nestor

Unto Mr. and Mrs. Charles Simone a son was born February 25, and he is christened Charles Nestor Simone, for his father is assistant manager of the Nestor Film Company. "As pretty as a picture," is Charles Nestor, says his happy father, and already showing a spirit of independence. Other producers of films with pretty names please note for future reference.

Why Photoplays Have Killed Melodrama

By W. W. Winter

"BLESSINGS upon the head of Edison, the magicians, or whoever it was that invented moving pictures."

Melodrama, and the lesser theaters where melodrama appealed to the masses are, if not ruined, beyond the phase of existence where time can wither or custom stale. In other words, melodrama and the little melodramatic theater are dead. The theaters are still in existence; indeed, the theaters have been multiplied considerably. It is only melodrama that has passed and the moving picture has stepped into its shoes.

At no time, however, was melodrama in its most flourishing realm in the big city. The thriller with five acts and three scenes to each act, the exposition of exaggerated human emotions from laughter to tears, was at its best and palmiest in the country towns. Every little town and village in the United States had its "op'ry house" or town hall, and the quarterly or semi-annual visit of "a troupe" in melodrama was the great event to be discussed over the grocer's stove until the next one came along.

The "heavy lead," the "great impressario," and the "soubrette" could feel assured of a royal welcome in these little towns, and the day after the first night performance, if it was not merely a one-night stand, the village boys would grinningly greet the low comedian as he came out of the hotel and the village girls would almost shed tears as the sweet heroine of last night's sorrows appeared at the post office for her mail.

But all that has passed. Melodrama is no more. In every town in the United States there are moving picture shows that give excellent entertainment every night of the week, with two matinee days thrown in. The performances projected on the screen are often the same as those which pleased audiences in the New York houses where third-rate melodrama artistes feared to tread. There are thrillers galore, with pistol shots, piano accompaniment, and all the effect to make the dumb show more real.

The more melodramatic companies put on a more or less crude performance with the aid of more or less crude scenic effects—such as the "op'ry house" or town hall happens to boast. The dramatic show comes to town twice or four times a year and charges up to thirty cents. The picture shows, running all the time, allow selection and leisure in attendance. The village moving picture theater-goer can choose from a trip through Switzerlnad or the streets of Cairo, or he can decide to abandon the grocer's stove as being productive of nothing interesting in the way of gossip and go to see a genuine melodrama, as enacted in a film—and all exactly the same as that which pleased the blasé theater-goers of the teeth and cracker circuit in New York. Why pay thirty cents to see a rehash of an ancient theme by an obsolete troupe of archaic players when for ten cents the village critic can see a Richard Harding Davis story picturized, or a play by Shakespeare with all the appearances and vanishings of Banquo's ghost, or Puck effectively wrought by the film art?

With the exception of a few of the bigger and better melodramas of the A. H. Woods class, there are very few companies that now have the temerity to venture forth on the road. You would think that perhaps a semi-annual appearance of a good old gurgling villain, weeping heroine, braving hero melodrama would be hailed with at least the joy of variety or old affection. But it appears that there is not even this hope for the melodrama in the country. Dramatic companies, visiting old stands where they were old favorites and drawing bumper houses without advertisement or "paper" subsidies, now play to half-empty houses, while the two or three all-the-year-round moving picture shows are doing a continuous performance business with the standing room filled by a crowd waiting to get a seat at the intermission or the "one minute, please," while changing the reels.

William L. West, an old actor of the old school, was asked how many melodramas were going out on the road today as compared with before the moving picture boom.

"How many are going out?" he smiled sadly. "Believe me, there are more coming in!"

A great deal has been written about this moving picture situation, but most of what has appeared has been from the metropolitan standpoint. We have been told that there are about 10,000 moving picture theaters in the United States. We have been told that there are about 1,000 such theaters in New York, and that they have put the old ten-twent'-thirt' melodrama house out of business. We have been told that this old temple of melodrama has gone out of business, after being a landmark for twenty years, and that that old Italian place where they played classics with marionettes has given up the ghost after thirty-five years in a dying struggle with the invincible moving picture.

We have been told all this, and we know it to be true, and we have been told of the even more obnoxious influence of the moving picture thrillers; but there is another side to the story.

It is the education which the moving picture has brought to millions who never saw a play or read a book for instruction. The matter of the obnoxious film may be disposed of, for the Board of Censors has been busy and the moving picture companies themselves have become aware that upon educational films depends the permanence of the cinematograph and its popularity. The main thing is that, since the educational moving picture has come in, it has transpired that the people, ever ready for knowledge if it can be imparted in an interesting way, have voted for more of the right sort.

For example, the writer once dropped into a picture show in an Adirondack village. There was a "thriller" film in which the murder was not depicted, but supposed, between scenes. There was an illustrated song and a ridiculous bit of filmy comedy—that is, a comedy film with a misunderstood man pursued by infuriated men, women, children, dogs, cats, and gendarmes—but the piece de resistance of the evening was a picturized poem by Browning!—"Pippa Passes."

The audience was composed mostly of the native population, including lumbermen, hunters, etc. There were also some people of a more moneyed class who

came to the picture show unashamed, because there were good things to be enjoyed.

The thing was done excellently. In fact, it had previously provoked favorable newspaper comment when produced in New York. Pippa was shown awaking in the dawn, drawing aside the curtains and looking out into the world with joy and faith. And presently she went forth, singing her song:

Morning's at seven,
The hillside's dew-pearled,
God's in His Heaven,
All's right with the world!

It is probable that the greater part of the audience had never read "Pippa Passes," and knew Browning only as a poet who seemed to have a thought at the back of his head which he never seemed able to express. But when that film came to a close there were tears in the eyes of the lumber jacks, guides, and farmers, for they had seen a wonderful poem wonderfully illustrated. It was the lesson of optimism, faith, and purity taught by pictures, just as physical children in the world of knowledge are taught the difference between "dog" and "cat."

And this sort of film is taking precedence over even picturized melodrama. Indeed, educational films are destroying the taste for melodrama. As the taste is educated the uneducated taste seems to become dull. Managers of moving picture shows in the little towns are unanimous in saying that they would rather have such things as "Ben Hur"—education with interest and excitement—"A Midsummer Night's Dream," "Richelieu," Davis's Van Bibber stories, moving pictures of travel in places where only the rich or the very adventurous can go—the managers and their audiences would rather have these than any story of "the papers and the chee-ild," a sinning woman destitute in a garret, or a hero offering progress only over his dead body!

And the moving picture companies know this, too, and are acting accordingly. They are exerting every effort to make the films "amusing, instructive, and entertaining alike to man, woman and child," to quote the dime museum barker. In the matter of comedy, too, the vulgar appeal to the risible emotion over, say, a man falling down stairs or being tripped up by the small boy, has given place to the film which appeals to the grotesque of imagination—the modern fairy story for children, an improvement upon the sanguinary Bluebeard and Jack the Giant Killer, so far as moral effect is concerned.

It is a great business—a wonderful business, and in recent years it has provided a livelihood for thousands—scores of thousands. In taking away the livelihood of thousands of other actors it has provided a substitute art for those who are really actors. Among Thespians in the moving picture business it has been a survival of the fittest, which is certainly a good thing for the public and may prove in the end a good thing for the profession.

In this connection William L. West, a typical old actor of the old régime, was asked how he liked acting for the moving picture machine instead of the gods. He smiled and glancing at the manager said quizzically:

"Well, I'm making a living out of moving pictures. Far be it from me"——

Having the manager's permission to express himself quite freely on the subject, Mr. West delivered himself thus frankly:

"Well, there's an old sentiment in the heart of the old actor. We—I suppose the rest of them feel as I do—we miss the feel of an audience—a living, breathing, present audience. We miss the footlights and the slow sad music when the heroine is on. We miss even the heartache of that fatal hiss from the gallery which only makes the hand-clap or the laugh all the sweeter.

"The great difference is that it is hard to play well to a picture machine. One must express so much more by pantomime. You will appreciate the fact that when you can fold your arms across your broad chest with your back to the distressed maiden and actually say, 'Touch this woman, but first reckon with me!' it is so much easier to have your heart, soul, pose, and facial expression in accordance with your lines.

"In this business we have no lines, but we make 'em up as we go along. It is no use just working your mouth. It expresses nothing. You may think it makes no difference in a picture, but it does. When I am playing my part I talk it, too, and it helps the picture to realism."

The old actor was silent for a reminiscent minute. Then he smiled and said:

"Yes, the old order changeth. Melodrama belongs to the dark ages now, and this thing has come to stay. It is getting better and bigger every day."

Photoplayers in Their Haunts

A visitor to a film-maker's studio was surprised by many interesting things he saw there. In regard to the actors, he says:

"The players rehearse made up and in costume and always rehearse with full scenic effect. This is because the stage managers have found that they never can tell when the players engaged in a scene will have reached just the right point in the execution of their work to be photographed.

"This gives an unusual appearance to the theater, unlike the stage of the regular theater during rehearsal. You find a group of people unemployed for the time, the light is not right or the stage hands have not yet set the scene, all costumed and made up, and perhaps discussing foot ball or fudge, or some play they have themselves seen the night before. During their working hours they live in makeup and costume, and one might visit such a theater a score of times and never become familiar with the appearance of any of the players in their proper person.

"At the noon hour the studio provides lunch for the players, and they eat it where they wish—in their dressing rooms or in the green room, or scattered about the stage, perhaps occupying some of the seats which have been arranged for scenes.

"One day the writer noticed an actress made up in a poor, soiled dress, and a ragged shawl thrown over her shoulders, her hair unkempt, evidently prepared to go through her part as a woman of the slums. A scene was set as a music room in a fashionable house. This seeming woman of the slums had drawn a pretty little table by the side of the piano, on which she had spread her lunch, and was herself seated at the piano playing something of Liszt's and playing it very well.

"Another scene for which the set was arranged was the interior of a backwoods cabin. On the backwoodsman's rough board table a little actress made up as a frontier waif had arranged her lunch and was reading Henry James."

Decoration of Picture Theaters

By E. Fletcher Clayton*

THIS is the day of motion picture theaters and skating rinks, where novelty and gaiety are all that is asked for and expected. So the decorations one sees at these places, from one point of view, are decidedly poor and trashy with gaudy colors and gilding; but from another outlook they are a wonderful improvement in the decoration of entertainment places.

The decorator decorating such a place has to consider its special use, and never forget that it is meant for a place of gaiety. His academic decorations, although far away finer and better, would be quite out of place in a cinematograph theater. Gaiety must be foremost, and it must be got into the decorative scheme. The wild balconies propped up on half of nothing, the twisted columns and gilded cupolas, the

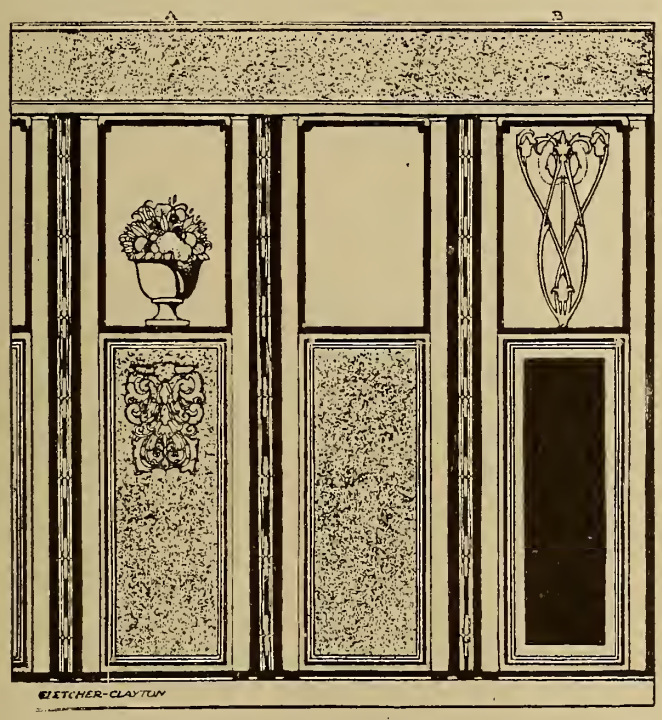

Suggested Panels for Picture Theater Decoration.

flying amorini and white plaster nymps, who hold enormous electroliers between two fingers, are all part of the amusement scheme, and must not be ignored. They may not be art, but never pretend to be—they are there for amusement, and for business.

The decoration of these houses is taken much more seriously by the proprietors of them than the average decorator would be tempted to think. There is a money-drawing power in decoration when applied to shows, and the shows which pay the best are those which not only give a good entertainment, but which are well decorated. Even in a cinematograph theater, where one sits in the dark most of the time, this consideration of decoration is no less serious a matter. That is the reason of the reference to Cinema House, London, which is decorated in the Elizabethan style; not "pure style" as the artists have it, but sufficiently Elizabethan in character to make it a really noteworthy instance of an endeavor to improve upon the trash which is seen in the average small provincial variety theater.

There is nothing in this place which could seriously offend. It is all done without immoderate cost, and with an air which is just right for its size and position. The idea, of course, is to attract the ladies who shop in the neighborhood, and there are tea salons attached to the theater. Note, "tea salons," not the common or ordinary tea shop, but somewhere where one instinctively feels that one can rest and take tea. And so it is with the decorative scheme, not only here, but at many other entertainment places, that a new note of refinement is coming in which is quite regardless of matters of class or price. One must remember that in a cinematograph theater many of the films shown are also being shown elsewhere, and on the same night, too; so that music and decorative attractions, as well as the films, help to get the people inside.

Here, then, is a real field for decoration; not high art, and not cheap rubbish, but a nicely adjusted compromise, which is in keeping with places of amusement. Here is the place for distempers, and all manner of clean and healthy water paints for stenciling and painted ornaments, for leaded glass and mosaic, etc., etc., if only the decorator will spring to it and get to work. No art preachment is needed, except perhaps to exercise restraint with regard to the gilding and amorini; and to remember that the style of decoration which is looked upon most favorably is not "New Art," but that which suggests classic grandeur.

In these decorations, great splashes of color may be used with fine effect. Bright colors nearly always give pleasure, but cream and gold effects never fail to excite admiration. There is something so refreshing about large expanses of fresh cream or very pale tinted distemper, and a feeling of greater spaciousness and lightness is created by so treating the walls of a hall. But when the place is comparatively small, such a scheme, done in an attempt to create an appearance of size, would simply defeat its object, and look mean. Paneling is more suited in this case; it gives a more comfortable appearance in a place which is only of moderate size. All ornamentation should be broadly treated, even that which is near the eye; not that detail should be omitted, for that would mean baldness, but that it should be fairly simple. A certain ornament used for decorating some space which was on a level with the eye might be enlarged and used again, almost in facsimile, on a ceiling panel. Again it may be repeated that novelty is what is wanted—the public like it because it is quite different to what they are accustomed to seeing in their daily surroundings, and the proprietor wants it because he recognizes its attractiveness to the public.

Here is where the "free" ornaments come in; ornaments which are quite familiar in form, but not pretending to be any particular style. Colossal wreaths, ten-foot festoons, and proportionately large pendants and other ornaments, spread across a wall space with

*Abstracted from *The Decorator*.

ease and economy. The easier the ornamentation is to execute, the more one may use; for generally the time in which the work is done counts more than the material, as far as cost is concerned. Cartouches of every form and size are useful, for they fill up the center of a panel, where the eye naturally falls, and are less expensive to execute than all-over ornamentation; and, for their purpose, much more effective.

The illustration suggests a form of ornamentation very well suited to a small entertainment place, like that of a cinematograph theater. The walls are simply divided into upright sections by means of broad laths, and in between the wall is painted and distempered. The lower panels are intended to represent plain painted work, with a little lining; and the ornament suggested in Scheme A would come just about on a level with the eye. The upper panels and the plain frieze would be done with a water paint, and the vase ornament would come about once in every four panels round the hall. To have it in each one would look absurd, though each of the lower panels would contain ornament. Scheme B shows a simply arrangement of the same style of decoration, the lower panels being plain and darker; and in this case the ornamentation of the upper panels would be carried out in every one of them.

These cinematograph theaters which are springing up all over the country are a sure indication of the coming of "Luna Parks" and "Dreamlands." They are a boon to the dwellers in miserable manufacturing towns. These people are realizing the benefits of fresh air in proportion to the increase of squalidness due to the growth of their districts; the country is too far away for them after a week's heavy work, but an open place, with trees, flowers, music, light entertainments and refreshments, is welcomed and patronized instantly, if only the thing is done on a large scale.

A better appreciation of aesthetic value will bring employment for arts and crafts, the decorators having their share. The kind of ornament will be that of the "Free" style, in which French, Belgian and American decorators are so facile. The wretched little stencil, loose, or in packets, will be nowhere in compeititon with the fine style of large-scale free-hand painting, and brilliant splashes of color.

Judge Pope's Decision

In a decision recently rendered by Judge W. H. Pope of the Fifty-eighth district court, sitting at Beaumont, Texas, it was held that the operation of a moving picture show on Sunday and the charging of an admission fee to the public is not a violation of the Sunday law, and the court accordingly discharged Clyde N. Blanchette, who had been arrested for operating his picture show on Sunday and charging admission. The matter was decided upon the question of law solely, the case having been submitted on an agreed statement of facts.

Judge Pope stated his opinion as follows:

The prosecution is under article 199 of the Penal Code, which in punishing certain acts done on Sunday includes a place of public amusement to be opened for the purpose of traffic or public amusement, and says further on "the term place of public amusement shall be construed to mean circuses, theaters, variety theaters, and such other amusements as are exhibited, and for which an admission fee is charged.

Article 9 of our Penal Code says that no person shall be punished for an offense which is not made penal by the plain import of the words of the law. Now, is it true that article 199, by the plain import of its words, can include the act complained of against the relator, as a penal offense? If the plain import of the words relied upon to describe this offense will describe it plainly, then the relator will be guilty of a violation of the Sunday law, but if they do not, then he has committed no offense.

It will not be contended that moving pictures were exhibited in this state at the time of the last amendment to the Sunday law. Now what was in the mind of the legislature, and what character of exhibitions or places of amusement were intended to be exhibited? We gather that from the expression in the law which says that a place of public amusement means circuses, theaters, variety theaters and such other amusements as are exhibited, for which an admission fee is charged.

According to the doctrine of ejusdem generis, which in English means of the same kind, it will hardly be contended that a moving picture show is a circus, or a theater, or a variety theater. I do not think the fact that the pictures are in motion is of any serious value in determining the question before me. If the pictures were thrown upon a canvas by means of flashlights, it would make no difference if they were stationary and not moving. If the legislature intended to say that an exhibition of pictures was sought to be inhibited it would not have put the words in the statute above quoted, showing that its mind was directed towards those things which were in common vogue in this state at the time of the enactment of the law, and which were being exhibited on Sundays and which they determined to suppress.

The relator has furnished some very strong authorities in the way of decisions of the supreme courts of several states in the Union. In ex parte Roquemore, 131 S. W. 1101, Judge Ramsey, writing the opinion for the Court of Criminal Appeals of Texas, declared that baseball, though a public amusement, did not fall within the terms of the statute—Art. 199—because the amusement of baseball was not of like or similar character to circuses, theaters and variety theaters, and he cites with approval ex parte Muckenfuss, 52 Tex. Cr. R. 467: where the rule is laid down for construing the statutes, it says: "It is a familiar rule that where general words follow particular and specific words the former must be confined to things of the same kind, especially is it applicable to the interpretation of statutes defining crimes, and regulating their punishment."

The state has furnished but three authorities. One of them is Rolan vs. Kleber, 1 Pitts B. R. 68.71, which was a decision that one opera performance is not a theatrical performance. If an opera performance is not a theatrical performance, certainly a moving picture show cannot be a theatrical performance. Another authority is from Ohio, where it was held that a musical performance is not a theatrical nor a dramatic performance, under the Ohio statutes. Then if a musical performance is neither a theatrical nor a dramatic performance how can a moving picture show be a theatrical performance? Another case is from Wisconsin, where a negro was denied to participate in the amusement of roller skating. There was no criminal complaint, but he sued under the civil rights statute of Wisconsin, which gave negroes the right to go into barber shops, theaters, restaurants and hotels, and allowed them damages if they were discriminated against on account of their color, race or previous condition of servitude. The court held that roller skating rinks are places of amusement, and very correctly, but there is a vast difference between a party bringing a civil action for damages for denial of his right to go into a place of public amusement, and prosecuting a man for committing a crime for running one. Of course, Wisconsin has got a right to have such a law if she likes that kind of a thing, but more is the pity for Wisconsin.

I regret that this unpleasant condition of things has arisen in our community, but I have nothing to do with that when I come to expressing my humble opinion as to what the law is.

The decisions furnished by relator come from Montana, New York, Idaho, California and others. If I had any doubt as to the correctness of my interpretation of the law I would resolve it in favor of the state, but I have no such doubt, and the relator is discharged.

Buffalo Jones at the Sportsmen's Show

At the Sportmen's Show, in Madison Square Garden, the Buffalo Jones pictures were one of the leading features. Col. Jones himself was there, lecturing the pictures, and his success was as much due to his own personality as to the interest of the pictures.

Some Questions Answered

By William T. Braun

In this department, answers will be given to questions upon any subject in connection with the conduct of moving picture exhibitions, the operation or construction of moving picture machines, the making of pictures or films, or any questions pertaining to the amusement business which can be answered without specific reference to any person or company. Questions are invited, and will be answered as promptly and as fully as possible.

CARBONS.

I am having considerable trouble with carbons. The throw is 100 feet, giving us a picture 11 feet 4 inches by 15 feet 6 inches. I am using A. C., 60 amperes, and have one of the new Economy transformers. The lower carbon burns to a long slim point after the light burns for an hour or so. I cannot get a good light with less than 60 amperes. What can I do about the carbons? What kind of terminal would you recommend? I am continually melting the solder in the copper terminals.—J. C. S.

YOUR carbon trouble may come from either any of two things. Either you are not using a first-class carbon or you are using too much current, producing excessive heat. I would advise you to get a few samples of some other brand of carbon and try them. If they behave in the same way then you can look elsewhere for your trouble.

The burning to a long tip comes from overheating of the carbon. This overheating may come from one of two causes. Either you have not a good connection between your carbons and carbon holders, or you are using too much current.

Take the carbon holders out and clean the insides with a small file. Ridges are formed on the inside if they are not scraped out frequently, and a poor connection results. Scrape them until they shine and are as round as you can make them.

I think it is more than likely that you are using too much current. You say you are using 60 amperes with an economy transformer. Have you measured the current with an ammeter, or are you taking the mark on the transformer above the lever contact? The only correct way to tell how much you are using is with an ammeter. The steps on the transformer may be O. K. for a certain voltage, but you may not be using current with the required voltage, and consequently you are getting more amperes than that marked on the transformer.

In regard to the terminals. If you are using 60 amperes, solder will not stand under the heat created by so much current. Some lamps have a small extension, about two inches long from the carbon arms to which the lugs may be attached. If your lamp does not have this, I would advise you to take a flat piece of bronze about two or three inches long and attach the wire to it by means of a clamp terminal, attaching the other end of the bronze to the binding post of the lamp. This removes the copper terminal from the heat of the lamp, also preventing the ends of the wires from becoming charred. When the ends of the leads become charred cut them off, scrape back the insulation, and attach to the lugs.

The reason I suggested bronze is because it is the same hard metal of which the lamp is made, and it will stand a great amount of heat. If you cannot get it, a small piece of steel wire bent double will serve the purpose.

With the size picture and the long throw, you could hardly get a perfectly satisfactory picture with much less than 60 amperes on A. C.

ARRANGING PROGRAM.

I am going to open a new house next month. We propose to run three reels of film and two songs, an illustrated and a spot. What would be the best order to run them? Also, how long will it take to run a show of this kind? Do operators generally inspect each film when receiving it from the exchange before running it at the show?—Theater Manager, Indiana.

THE most satisfactory way of running your show would be to start with the usual annuncement or advertising slides and follow with the first reel. After the first reel, run the illustrated song, following with the second reel. The spot song will come next, finishing with the third reel.

While running the illustrated song the first reel can be removed from the machine, and the second threaded up so that you can commence immediately at the close of the song. The first reel can be rewound while running the second one. During the spot song the second reel can be taken out, rewound, and the third one threaded up. The second can be rewound while running the third reel. This would leave but one reel to rewind, and one to thread up during the intermission, giving the operator ample time to trim the carbons, etc.

This show should hardly be run in less than one hour—fifteen minutes for each reel and five minutes each for the songs and intermission. Do not attempt to run 1,000 feet of film in less than fifteen minutes, as it quickens the action to such an extent that the picture is not appreciated by the audience, to say the least.

The inspection of films on receiving them from the exchange depends on the operator and the film service you are getting. A careful operator will run each reel slowly through the rewind or machine upon receiving them, examining all patches and making such repairs as are necessary, also attaching the leader. If you are getting first-class service it is not always necessary to inspect them. But if your operator has the time it should be done, as a little repairing may save a large amount of trouble if something should happen during the show.

SHUTTER BLADES.

A short time ago I changed our machine from a two to a one-pin movement. Should the extra wing of the revolving shutter be taken off so that the film will have a longer exposure on the curtain?—G. B. L.

YOU have an incorrect idea as to the use of the two blades on an inside revolving shutter. The one blade is to cover the aperture while the film is being brought down; the other, or narrower blade, to help eliminate the flicker. That is, the period of time between the passing of the shutter blade across the curtain is reduced by using two blades. Therefore, the passing of the blade is not so noticeable when the shutter has two blades. The cutting off of a bright light by a dark object at long intervals apart is what actually produces the flicker. A full discussion of the

principle of the revolving shutter was given in the February 21 issue of The Nickelodeon.

When you had the two-pin movement on your machine both blades of the shutter crossed the aperture between the movements of each pin. You did not mention whether you changed the shutter shaft and gear when you changed the pin movement. If you did not, your shutter will be traveling altogether too fast for the present arrangement of the pin and starwheel.

Many machines at the present time are being equipped with an outside revolving shutter. This shutter has three blades, one for cutting off the light when the picture is moving and two for eliminating the flicker; that is, the last two blades pass in front of the lens when the film is at rest. This shutter gives better satisfaction than the ordinary two-blade affair. So you can see that you are slightly mixed on the purpose of the second blade of the shutter.

Collier Lectures in Milwaukee

The moving picture theater has developed into the largest of the commercial amusements, having a daily attendance in this country of about 5,000,000 persons. Its influence in its present stage is for good, as it creates a heightened appreciation of beauty. It uplifts the morals, as it deals in problems of heroic sacrifice and final heroic triumph.

These were some of the conclusions reached by John Collier of the New York board of censorship for moving pictures, in an address before the joint meeting of the Wisconsin Library association and the Institute of Municipal and Social Service.

"The average theater is merely trivial today," he said. "This is because the theater is dominated from New York, where plays are passed upon before given to the rest of the country. Three classes of people dominate the theater in New York: First, the business man and the idle class who are seeking diversion; secondly, a very limited class of intellectual people; thirdly, the traveling public out for a good time. These classes create the demand, to meet which the producers give us the racy and trivial shows.

"The great mass of the American people, the wage-earning class, have had nothing to do with the theaters. The prices, in the first place, have not been within their reach and the producers could not reduce them because of the great salaries demanded by stars. Therefore, the only way to reach the great heart of the people was through some labor-saving device.

"The motion picture solved the question of labor-saving devices. At first they were vicious and vulgar, but they passed from this stage by purifying themselves. They now reproduce at a low admission price that which is best."

Miss L. E. Stearns, of the Wisconsin Library commission, said that one effect of the moving picture houses is that they have decreased the circulation of the library. For this reason in Madison the motion picture was introduced into the library, with remarkable success. She explained that in one instance, after one of Tennyson's works had been read and thrown on the screen in motion pictures, a demand came for the rest of Tennyson's works. In this way the motion pictures have been used to stimulate the library circulation, she said

Book Review

Motion Picture Handbook, by F. H. Richardson, is a little volume of 176 pages for the use of motion picture theater managers and operators. The author is editor of the "Questions Answered" department of the *Moving Picture World,* and the book is practically a compilation of material which has appeared in those pages.

Generally speaking, the work contains much that is of value to workers in this field. It contains a number of slightly erroneous statements, especially in the sections devoted to descriptions of electrical applications; but in most cases these misstatements are purely technicalities, and therefore harmless from a practical standpoint. The only serious error is the statement, under "Switches," that fuses should be installed at the dead end of switch. This is contrary to the provisions of the National Code.

The statement is twice made that one ampere at 2,000 volts becomes "about" ten amperes after it has been transformed down to 110 volts. This would allow a transformer efficiency of only 55 per cent, when as a matter of fact even a small transformer should return about 95 per cent. "About" 18 amperes, instead of 10, would be more nearly correct.

No objection can really be made to the substitution of the letters V O A for those of the old familiar formula, E R C. Volts, ohms and amperes are doubtless more familiar to operators than Electromotive force, Resistance and Current. The classification of rheostats, transformers, choke coils and arc rectifiers all as resistances is probably explained on the grounds that the use of the word "resistance" in this case is vernacular, signifying anything interposed between the arc and the mains to reduce the voltage.

Under "Focal Length of Lenses" directions are given for finding the focal length of the objective of a projecting machine by measuring from the focal point on a wall to a point midway between the lenses. Immediately following is the statement: "The distance from the lens nearest wall to wall will be the back focus." While this sentence might be correct if isolated from its forerunner, it leaves a false impression, since the back focus is properly the focus of the back lens when removed from the combination.

As stated before, however, most of these errors will not interfere with the sound practical knowledge which may be gained from the book. Its most objectionable features are the very poor press work and extraordinarily crude drawings. We have never before seen the work of so poor a draughtsman dignified by publication. Another feature which rather detracts from the value of the work to American eyes is the bunch of advertising pages in the back.

In spite of these faults, some of which are so glaring, there is a certain air of practicality about the work which will recommend it to workers in the motion picture field. We have no hesitancy in saying that all such can read it with profit, and will be better operators and managers for doing so. Mr. Richardson was a good operator when he lived in Chicago a few years ago, and there is no reason to suppose he has added nothing to his experience and knowledge since.

Published by the *Moving Picture World,* New York. Cloth covers, $1.50.

Direct versus Alternating Current

By C. K. Larson

ONE of the most important factors contributing to the success of a motion picture theater is the quality and brilliancy of the light projected from the lamps. For pleasing effect motion pictures require a steady, white light of sufficient intensity to bring out the natural light and color values of the films, and the theater having the better quality of light stands the best show of getting the biggest patronage.

Motion picture operators are well aware of this, and also of the fact that the light obtained from direct current is superior to that of alternating current arcs. Many, however, who could obtain only alternating current supply, used it simply for the lack of apparatus for economically converting alternating current into direct current.

However, where there is a demand an adequate supply is bound to come, and in the case of the motion picture it is interesting to observe the development of the mercury arc rectifier, an apparatus which not only furnishes current of the desired character, but is claimed by its makers to supply it at a cost less than that of the most economically operated alternating current arc.

The significance of this development to the ten thousand or more motion picture theaters now using alternating current can be demonstrated in several ways, but most instructively, perhaps, by a comparison of the cost of producing a given intensity of projected light from alternating, direct, and rectified current, with the most approved economizing devices applicable in each case.

There are certain facts, however, which should be borne in mind, while making such an analysis, since they are too well founded to require any demonstration. The best projection of motion pictures requires a light intensity upwards of 8,000 candlepower. It is difficult to secure more than 5,000 candlepower from alternating current, even with the best economizers or the highest current values practicable. Furthermore, on the lower frequencies there is an objectionable flickering, together with an uncertain intensity of the projected rays, due to the wandering of the arcs around the tips of the carbons, thereby sometimes causing the forming of the hottest or most brilliant spot at the back of the electrodes.

Of course, where direct current supply was obtainable, some have found relief by using it, but their experience has served to emphasize the prohibitory value of the additional cost entailed by the loss of at least sixty per cent of the energy drawn from the line in the resistance or rheostat employed to regulate the current in the arc.

These facts serve to define the limitations of both the alternating and the direct current arcs relative to motion picture lighting. But in order to give the various alternating current with economizer methods a fair deal, assume that a light intensity of 5,000 candlepower is required. From actual determinations carefully made it is found that to obtain 5,000 candlepower from

A 110-volt A. C. circuit, with rheostat, requires 7 kilowatts.
A 110-volt D. C. circuit, with rheostat, requires 2.25 kilowatts.
Any A. C. circuit, with economizer, requires 2.1 kilowatts.
Any A. C. circuit, with mercury arc rectifier requires 1.7 kilowatts.

These figures are furnished by the General Electric Company.

Since economy arc transformers are extensively used in alternating current supply with a substantial reduction in energy consumption, the method of using alternating current with rheostats may be considered as obsolete, and since a prohibitory amount of energy is wasted in using direct current with a rheostat, that

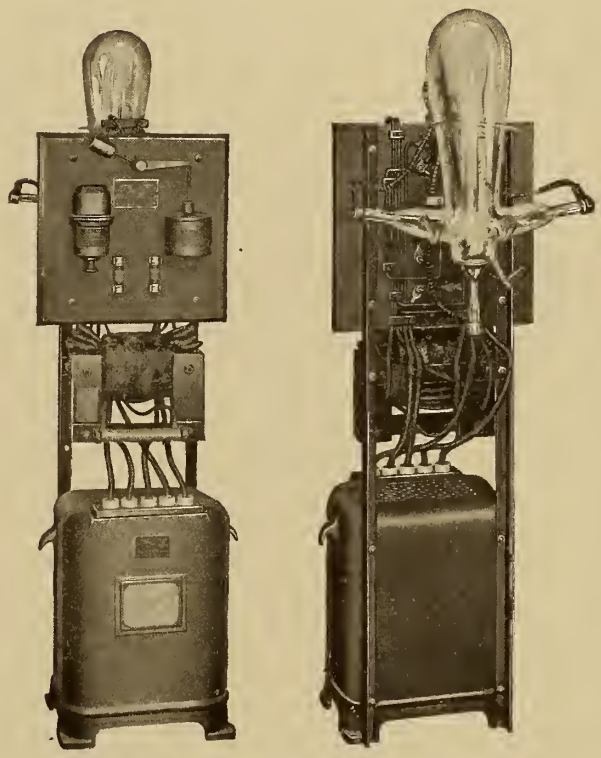

Front and Rear Views of Mercury Arc Rectifier.

method, also, can be omitted from present consideration. This enables a direct comparison between the results obtained from alternating current with the use of economizers on the one hand and mercury arc rectifiers on the other.

The figures show a difference of 400 watts per hour in favor of the mercury arc rectifier. This means, that on the basis of an average daily run of seven hours at a cost of six cents a kilowatt, the use of a mercury arc rectifier provides a light having all the advantages of that given by a direct current arc, at a cost of at least $60 per year less than that obtained from alternating current with an economizer.

Furthermore, it is evident that when the light intensity required exceeds 5,000 candlepower the saving affected by the use of the mercury arc rectifier as com-

pared to the cost of using direct current with a rheostat is much more significant. For instance, in order to obtain 7,500 candlepower requires 3.1 kilowatts from direct current with rheostat, and 2,15 kilowatts from alternating current with mercury arc rectifier. The difference in favor of the mercury arc rectifier is 950 watts per hour, which (on the average daily seven hour, six cent basis of operation) means a saving of at least $145 per year.

In addition to the positive money saving capability of the device, the perfect light of practically any candlepower obtainable from alternating current supply, and the reliability, ease and safety of operation, render the mercury arc rectifier invaluable for making pleasing and successful photoplays.

Another important point, which should not be overlooked in this connection, is the possibilities of the device for effective advertising. Instead of cooping it up in a small closet in some obscure location, where it is left alone to "blush unseen," it can be placed in a conspicuous place at the entrance to the theater, where it will attract the attention of the passers-by to the "little green imp in the vacuum tube" who so marvellously converts the invisible alternating current vibrating through the dark and silent wires, into the steady, brilliant light which gives the most important touch of realty to the beautiful pictures on the screen.

The figures given here, as stated before, are furnished by the General Electric Company, which manufactures the mercury arc rectifier. The writer will be glad to receive, and to answer through the columns of this paper, comments or questions from users of both alternating and direct current on this important point. Experiences of users of the mercury arc would be particularly interesting.

Buffalo Jones Talks to a Reporter

At the Sportsmen's Show recently held at Madison Square Garden, New York City, a reporter for the New York *World* sought out Col. Buffalo Jones, the famous African hunter, whose exploits were shown in a couple of reels released not long ago by the Licensed manufacturers, and interviewed him, with the following result:

For the Sportsmen's Show they have turned the Garden into a four-acre square of the North Woods, with bits of the Rockies and small cross sections of Maine and the Florida Everglades, and the likes of that interspersed here and there. And upstairs, if you take the second turn to the left and go down a long aisle that is fragrant with spicy evergreens and equally spicy beastpelts, you come to Col. Buffalo Jones, the man who went to Africa on a New Mexico cow pony and roped the animals that certain other people won't shoot with an express rifle unless Kermit is right there with a spare gun.

He is tall and thin and out of a saddle he is awkward, and he looks something like pictures of Uncle Sam and something like the oldest Odd Fellow in Iowa. Also, despite the fact that he comes from as far West as man can come from without wading in the Pacific Ocean, he doesn't talk at all like a frontiersman talks in a Western play or a Western short story. But if you drop in and look at the moving pictures of his trip to the big game country and hear him give his lecture describing how he and his two cow punchers—Means and Lovelace—ran down, roped, tied and brought back with them such dainty little household pets as a full grown lioness, a three-ton rhino, a warthog with a perfectly miserable disposition, a hartebeest, a cheetah, a bock buck, an eland and a giraff twelve feet tall, you begin to realize that the elderly gentleman in the Southern slouch hat and the white chin whisker that looks like a real lace jabot is a considerable personage.

His crinkly eyelid in its nest of puckery wrinkles flickered slightly over a small clear blue eye when an *Evening World* reporter asked him if he'd ever had any doubt of the success of his undertaking when he and Means and Lovelace sailed for Africa.

"Nary a doubt," said Col. Buffalo Jones. "I had two of the best cow punchers that ever straddled along with me. I had the pick of the cow ponies in the Western country—ten rangy little hosses that were trained like soldiers and not afraid of anything that ever walked, swam, flew or crawled. I knew those hosses could stand the African climate because they'd stood all the other climates there are, and one climate more or less don't make much difference to a hoss.

"I knew they'd go up to a lion just as quick as they would to a bale of alfalfa hay. I knew I was going to take along one of the best moving picture photographers that ever lives. He was an Englishman, and if he could have rid a hoss as well as he could handle a camera our films would have been even more wonderful than they are.

"And when I got to Africa and saw the bunch of natives that were going along with us I knew that part would be a cinch, too. I thought for a minute I was attending a Republican county convention in Mississippi. If those coons had been able t otalk United States with the real smoke accent you wouldn't have been able to tell them from a bunch of waiters at the Galt House down in Louisville, Kentucky. And they took to tipping as if they'd been born and brought up on a Pullman car.

"We just naturally couldn't fail. We went out to show the world something and, believe me, son, we did it. We wanted to show that it's better to catch a wild animal than it is to kill him. We wanted to show that three American cowpunchers mounted on American cow horses and armed with nothing but three sixty-foot lengths of rawhide could capture any animal on earth. When we started from Nairobi right behind Colonel Roosevelt—take it from me, young man, he'll be the next President of the United States—I say when we left this here town for the interior the Britishers were betting us seven to one we wouldn't capture either a rhino or a lion. I harvested a right smart spending money covering those bets, and so did my two boys.

"Did we get an elephant? No, but the reason we didn't was because we didn't see one. All that saved Mr. and Mrs. Elephant was that we couldn't get up into their territory on account of the poisonous flies."

Colonel Jones was reminded that somebody had quoted him as saying that the best way to capture a lion or a warthog was to look it straight in the eye and charm it.

"Well," he said, "I guess the boys got me down wrong there. I s'pose maybe a man might charm a warthog by looking him in the eye, but my experience has been that it's mighty hard to hold a warthog's attention that way. And, anyhow, a warthog is sort of poor company. And the same might be said of a lioness. While you were holding her eye her claws might reach out and sort of reorganize your features."

Recent Films Reviewed

How Bella Was Won.—Edison. A nice romantic comedy stirring a warm sympathy. Dickens seems to inspire the film makers to their best efforts. We have had four Dickens' adaptations recently, all of high merit. In "Tale of Two Cities," "Christmas Carol," and "Old Curiosity Shop," the Vitagraph, Edison, and Thanhouser companies, respectively, rose to their highest levels of production. "How Bella Was Won" does not take rank with the three mentioned, but it is a film of merit. The story is slow in rising, but the climacteric scene is dramatic and delightful.

Captain Barnacle's Courtship.—Vitagraph. Another comedy of the excellent "ancient mariner" series. The stock players who have engaged in this series are getting their roles down pat, and they come on the screen like old friends. It is one of the few picture series that have not depended on some particular comedian or grotesque character. Here a whole group is concerned and though funny in an eccentric way, they are decidedly human and their antics are plausible. "Captain Barnacle's Courtship" brings lots of laughter. The final picture showing the Captain ruminating upon the uncertainties of existence, is interesting and well executed.

A Night of Terror.—Edison. This little episode has humor to recommend it, and some pretty good acting. Dramatically it is not very effective, because the complication involves sound, which the silent screen cannot convey. To apprize the audience of these supposed sounds required a process so round-about and labored that it almost killed the humor. The situation is not well adapted for pantomimic presentiment.

The Old Family Bible.—Edison. My! What a far-fetched coincidence! It is too improbable. For farce it would do well enough, but here the treatment is serio-comic—too serio and not enough comic. The heroine was almost in tears at the end, and so peevish. The piece is not probable enough for comedy, nor funny enough for farce—marred in the making.

Conscience.—Biograph. Here is an instance of the fact that the premises of your drama need not be over-strong, providing you build upon them a logical conclusion. This drama starts out with a complication that is rather strained, but subsequent events are so logical and the acting so persuasive, that the end brings complete conviction. It is an interesting drama, extremely well acted. There are at least five characters who give a remarkably expressive performance. The Biograph acting improves all the time, even though long ago it was acknowledged perfect, relatively speaking.

The Medallion.—Selig. This film has nothing to it but the mission backgrounds, which are quite interesting. The drama leads nowhere; it just peters out. It is innocuous and thoroughly conventional. The film may have a religious appeal for some people, but scarcely a vivid one at that.

Jealousy Foiled.—Pathé. This drama consists of villains and counter-villains, and that is about all. There are three men and each commits a crime or two, just on the spur of the moment. From the easy way they do it, one would suppose crime was one of the simplest and most natural things in the world. There is robbery, and theft, and forgery, false accusation, contemplated suicide, and several other dodges appropriate to gentlemanly conduct. Such a film is widely at variance with the ideals that now prevail in motion-picturedom.

Regatta on the Mekong River.—Pathé. This travelog film shows a very spectacular kind of water sport, and holds a thrilling interest. That a water craft could be propelled so rapidly by human hands is incredible till seen. It is one of those astonishing things that happen on the other side of the world, and which we would never know about unless the film-makers brought them to us.

The Fury of a Woman Scorned.—Eclipse. This woman's fury did not amount to much as she took it out in such an underhand manner. She was not a lioness, but a snake. As a dramatic figure she was puny. The piece is laid in Roman times, and receives an adequate presentation. The soldiers wore pantalettes as a part of their uniform; this may be authentic, but it is far from beautiful, and decidedly out of harmony with the traditional conception of a Roman soldier, as seen in statues, etc. The acting is characterized by frenzied gesticulation; this seems to be in conformity with European standards, so the actors are not to be blamed. How stiff our actors must look to the Europeans! The disparity comes from a difference of race—the reserved Anglo-Saxon and the volatile Latin—and will never be overcome as long as the two races maintain their character.

The Eye of Conscience.—Selig. A very interesting pantomime. It is a one man reel and the issues are psychological—conscience in action. The beauty of such mental or psychological dramas is that if they hold the interest at all, they hold it intensely. Too often they do not hold the interest at all because the issues get lost in mental haze. This piece is of the other kind and speaks well for the dramatic ability of its author because it sustains the interest without halt or wavering. No small part of this success is due to the very excellent acting of the conscience-stricken protagonist. Every move was full meaning—an effective example of the power of pantomime. This actor is constantly proving his versatility. The usual Selig jumpity, in-and-out of focus photography prevails.

The Beautiful Wye Valley.—Eclipse. We need no hint from the title to realize that the Wye valley is beautiful. The pictures carry their own message. Photographically, they are a little fuzzy and indistinct, but this vagueness has compensations, in that it adds to the pictorial value of the scenes. The film tints also help. The Urban-Eclipse scenics are an art product that never fail to make an esthetic appeal.

The Little Drudge.—Essanay. Beyond the boarding-house scene, which is a remarkably good transcription of reality, this film contains little to recommend it. The plot is forced and the emotional tones cheap. The acting lacks finesse. The disrobing scene ought to be censored, not because it is inherently suggestive, but because the actors unwittingly made it so by their self-consciousness. If the film aimed to show inferior people in cheap surroundings, impelled by commonplace motives, it succeeds.

The Outlaw and the Child.—Essanay. A tender-hearted outlaw saves a little girl from perishing in the desert, at the expense of his own life. It is not unplausible, but rather stagy. One feels the deliberate bid for sentiment, and resists it. For instance, the little tot was dressed in her little nighty, with little bare footies, and carried a doll—this is too much. It must be admitted, however, that she made an effective picture up against the desolate background of the Mojave desert—a contrast between tender humanity and savage nature. He would be a brute indeed who refused to succor a child under such circumstances. The outlaw's death seems unnecessary: how much stronger it would have been to let him suffer the penalty of his generosity—that is, imprisonment. He foresaw this when he rescued the child and that is what made his act heroic. The death was gratuitous and not very convincing—another bit of stage sentiment. In spite of its faults, the film is well worth seeing. It is a Western subject of superior type.

In the Hot Lands.—Melies. It is interesting to observe what unlikely things may be invested with dramatic interest. Here it is a cake of ice. A girl rides twenty-five miles to get it for her fever-stricken mother, and the trials and tribulations of the journey provide the dramatic elements of the film. Suspense is well sustained and the film proves effective. It provides the Melies leading lady an opportunity to play her always successful role—that of Girl to the Rescue.

Undying Love.—Pathé. One of those furiously romantic things which the foreign makers love to turn out. The motives are assumed, or at most barely sketched, and whatever dramatic force the scenes achieve, is left to the physical exertions of the actors. There is enough swinging of arms and tossing of heads to turn a windmill. The action is necessarily rapid in order to keep people from thinking; but such haste, of course, deprives the scenes of impressiveness. The pictures hold the eye, but not the heart or the mind. Wisely the makers invest such pieces with every device that will appeal to the eye, such as picturesque settings, graceful performers (in some cases) and last and not

least coloring. This last is not a joy unalloyed, but does prove a great relief from the dullness of black and white, or to be accurate, drab and white. Rather that corrosive pink which seems to be the main constituent of the Pathé palette, than the usual drabness. That films can be colored by the stencil process at all is perfectly wonderful; but few of them are likely to carry off any palms in the art world. Gaumont, however, by sticking to the photographic process and perfecting it, has produced monochromatic pictures that would arrest the attention of any artist.

Max Is Embarrassed.—Pathé. A bit of French foolishness elaborately worked up. There is wit in it, and it proves amusing. As the first few scenes apparently took place near the sea, one wonders how Max was able to cover 175 miles in his barrel journey.

After the Boxing Bout.—Pathé. The best rough-house comic that has appeared in some time. It is fun fast and furious. To watch it and laugh is good for the soul. The rough-house element is not objectionable, because based on reason. The acting is excellent. A really good comic like this is rarer than any other kind of photoplay, and comes like a June day in January.

An Oriental Abduction.—Selig. A piece that has humor and is well adapted to the motion picture medium. It might have been handled in a more romantic vein, however. It is now a mere comic, whereas it might have been a whimsical fantasy. The Arabian night atmosphere offered possibilities that have not been grasped. The treatment is prosaic. Photography could be improved.

A Decree of Destiny.—Biograph. This little drama is pleasing because it gets away from the rut of everyday life and shows us a group of characters who are true and human enough, but possess qualities of the rare and charming. Those two demure maidens, so quaint and old fashioned, are something new in the heroine line. The drama too is quite out of the ordinary with an action based on unusual motives. The settings are excellent particularly the two semi-pageants at the end. In the scene showing the ceremonies attending the investiture of a nun, the public sees a performance to which love or money would not secure it admission in real life. The details of this ceremony were so circumstantial as to stamp it as authentic. The acting throughout is such as one expects from Biograph.

Love and the Stock Market.—Edison. This film succeeds in doing a very difficult thing—that of rendering a business transaction dramatic. There is so little that is pictorial or even tangible about a business transaction that pantomime can scarcely get any hold upon it. Here, however, by clever manipulation of stock-tickers, telegrams, broker's blackboards, financial columns, etc., a stock market deal has been made to tell its own graphic story. The actors also do their part intelligibly. The film leaves a pleasant and profitable impression.

The Little Shepherdess.—Selig. An inapt title, because the heroine's sheep-herding has so little to do with the story. The story is a familiar one of two lovers separated by an ocean and a villain. The ocean is crossed and the villain foiled, and the piece ends in a lovers' embrace, just as it should. The love tale gains an added interest from the local color and good acting. It is doubtful if the finale will be entirely clear to all; the knife-grinder's mistake gives the piece a very dramatic twist at this point, and it seems as if the occasion might have received more emphasis. The street scene, showing a "dago" fruit stand and arcade effect, was well arranged, and particularly praiseworthy in that it was not thrust upon the spectator's gaze to be admired. The pictures are not easy to watch, owing to unsteady photography.

Of Interest to the Trade

By L. F. Cook

New York Letter

In all seriousness, a New York paper the other day published the fact that during the big wind recently, the sign on a moving picture theater blew down and hit a pedestrian on the head, spraining both his ankles. This compares favorably with the story of the man who tied his shoestrings so tight he choked to death.

The point is that during that hurricane many signs did break loose and did much harm. Every paper we saw had reports of several of these accidents, but every paper called particular attention to the moving picture theater affair, and passed lightly over the others. To those of us who know the publishing game, the reason is obvious; the other interests are a source of revenue to the papers, the moving pictures are not.

Surely, there are hundred of industries that are no source of revenue to the daily papers, yet the press leaves them alone. Why? Because they have their own weapons of defense, namely, strong substantial trade papers. We wish that every one of our readers would think this over very seriously. In the words of a well known advertiser, "There's a reason." For every condition in life there is a reason.

On March 17, the Patents Company intends again to attack the Gaumont camera. Of course, just what turn affairs will take in this particular case no one can say, but which ever way things go the result should be beneficial to the industry. Viewed from the side lines, this game seems to be spread over a ten acre lot, with noboby knowing just what the rules will allow, and just what is forbidden. This being so, it would appear as if the best thing that could happen would be to have the rules clearly defined. Then everybody could go ahead, and with a definite road marked out for their guidance, eventually arrive at the place set out for.

The independents have gained an unusual advantage in the fact that from now on, they will be able to use Eastman stock. It has long been a source of wonder to the thinking, just what barrier kept the Eastman people out of the independent market. Here was a field that offered over a million and a half dollars of business a year, every nickle of which was cash, and Eastman didn't go after it. Whatever that barrier was, apparently it has been removed, which also is a step in advance.

The air is rife with rumors of the politics of the game, new companies, new combinations, and other interesting things, but following our policy of mentioning facts that have actually occurred, we must ask our readers to wait until some of these various deals come to life. However, we advise all those interested in the game, to keep their eyes open.

Harry Raver, formerly advertising manager of the Yankee Film Company, has left that company and is now associated with the North Pole Picture Company. This company is handling the Cook pictures, and as it is in this line of work that Raver excells, his many friends are predicting an unusual success.

The many Chicago friends of P. M. Perretz, who was for some years connected with the Chicago office of Pathé Frères, will be pleased to know that he has been advanced to a position in the New York office of that concern.

G. A. Magie of the Solax Company came back to town recently, and those standing orders he went out for came along too. Everywhere Mac, as he is called—nobody knows why—everywhere he goes he captures one of those standing orders.

Phil Gleichman, formerly of the National in Detroit, was in town recently. He looked hale and hearty, and in excellent spirits. We understand that he is not connected with the film game now, but the call was too strong, and he simply had to buy one meal up at Leo's place.

Mr. and Mrs. W. T. Rock returned from their recent trip to Cuba and Florida. It is quite probable, in fact a surety, that this return will be celebrated by another of the famous Vitagraph dinners.

The film that bids fair to be the top notch release of the independents, in the near future, is the "Son of the Executioner," a Great Northern subject. The film itself is really most interesting, which, coupled with the usual high grade of photograhy and mechanical perfection of the Great Northern product, entitles that particular film to honorable mention.

The Pacific Film Exchange, with headquarters at Seattle, Wash., 216 Seneca street, is about to open a branch in Portland, Ore. The new branch will be in charge of R. A. Grombacher. Many new theaters are being opened in that territory.

That Doc Cook Picture

Wilbert Melville, of the Solax Company, has been in Chicago during the past week in the interest of the Doctor Cook film, "The Truth About the Pole," now being placed upon the market by the North Pole Picture Company, located in the Mossler Building, Chicago. In addition to being the principal director of the Solax Company, Mr. Melville is at present the personal manager of Doctor Cook on his lecture and vaudeville tour and retains an active interest in the North Pole Picture Company, so that he is a fairly busy man.

Referring to the picture, Mr. Melville said, "Doctor Cook is mightily interested in the exploitation of 'The Truth About the Pole' because he feels that the pictures afford him an opportunity to present to a large number of people some interesting and startling facts which will go a long way toward convincing them of the merits of his side of the polar controversy. The doctor has had occasion to complain bitterly of the unfair attitude of certain papers which have garbled interviews and matter he has given out, misquoted him extensively and created a situation where it is seemingly impossible for him to get a fair hearing from the press."

At Hammerstein's Manhattan Opera House in New York over 50,000 people saw the picture and the comments were highly gratifying. The North Pole Picture Company has managed to incorporate the various incidents in a highly interesting dramatic story which seems to hold an audience enthralled from start to finish. The interest is, of course, heightened by the personal appearance of Doctor Cook in the leading role. Harry R. Raver will have immediate charge of the business management in Chicago, which, in the vernacular of the street, is "nuf sed." Thousands of inquiries have been received from interested exhibitors all over the country and state right bids are coming in rapidly, so that the doctor's hope of a large audience for his picture drama bids fair to be realized.

The Star Theater at Portland

The accompanying illustration shows the front of the Star Theater, Portland, Ore. The house has a street frontage of fifty feet. Its height is thirty-two feet and its depth a hundred. The plain white front is lighted by four hundred four-candle power incandescent lamps, three Nernst lamps being used in the lobby.

No musical or other outside attraction is used, posters in frames and wall cards serving to attract the

The Star Theater, Portland, Oregon.

attention of the passer-by. An electric sign hung above the entrance bears the name "Star" in big letters.

The Star's admission price is ten cents, the seating capacity being 750, opera chairs arranged on lower floor and balcony. The screen is eighteen by twenty feet, on a stage forty-seven feet wide and eighteen feet deep. An Edison machine in an operating room seven by nine by seven feet projects pictures with a seventy-foot throw.

Hot water heat is used, and the ventilation is taken care of with exhaust fans. The interior is lighted by means of thirteen stars in the ceiling, each star being made up of twenty-four incandescent lamps. The color scheme throughout is cream and light blue.

Ten shows are given each day, each show lasting one hour and consisting of three reels of film and two illustrated songs. Music and sound effects are used wherever possible.

The management believes in advertising and not only is bill posting resorted to, but space is used in the local newspapers to great advantage.

Constitution of the Exhibitors' League

Following is the constitution and by-laws of the Exhibitors' League of Ohio. This is offered as a model for other organizations of similar character, as advocated editorially by The Nickelodeon. In connection with this should be read the letter from President M. A. Neff, which appears on another page.

The officers of the Exhibitors' League are: M. A. Neff, president, Cincinnati, Ohio; W. A. Pittis, vice-president, Conneaut, Ohio; T. P. Reichert, second vice-president, Port Clinton, Ohio; G. O. Dupuis, treasurer, Lima, Ohio; C. C. Carter, secretary, Cincinnati, Ohio.

CONSTITUTION.

ARTICLE I. NAME.

Sec. 1. The name of the League shall be "The Exhibitors' League."

ARTICLE II. OBJECT.

Sec. 1. The object of this League is to promote and protect the welfare of the Moving-Picture Theaters and of the persons engaged therein within the United States, and especially within the State of Ohio. To provide opportunity for an exchange of ideas. To further, legally and legitimately, the best interests of all members thereof in all matters pertaining to the exhibitor's business. To use its influence to induce the manufacturers not to produce pictures that might be termed objectionable. It is not the purpose of this League to take sides with the independents or Patents Company, manufacturers or film renters, only so far as it affects the welfare of the organization.

Sec. 2. It shall be the purpose of this League that when there are enough members in a stated locality, that a Sub-League may be organized, which may make such laws as are deemed proper for its local government, so long as they do not conflict with the laws of the parent League.

ARTICLE III. OFFICERS.

Sec. 1. The Officers of this League shall be a President, Vice-President, Second Vice-President, Treasurer and Secretary. The governing body shall be known as a Board of Directors, consisting of the five officers elected at the annual meeting, who are to hold office until their successors shall be elected and qualified.

ARTICLE IV. DUTIES OF OFFICERS.

Sec. 1. The President shall preside at all meetings of the League. He shall call Special Meetings upon the request of a quorum of members of the Board of Directors, or upon petition of two-thirds of the members, or when he deems special meetings necessary. He shall strictly enforce the rules of the League, and shall investigate any infringement of the same.

Sec. 2. The Secretary shall keep an accurate record of the proceedings of all meetings of the League.

Sec. 3. In the absence of the President the Vice-President shall assume and perform all the duties of that office.

Sec. 4. In the absence of both the President and the Vice-President the Second Vice-President shall assume and perform all the duties of that office.

Sec. 5. The Treasurer shall have charge of all funds of the League, and upon order of the President and Secretary, may make an expenditure not to exceed $100.00 for every three months and no more without the authority of the Board. He shall keep a record of same, and shall report at each quarterly meeting, and at such other times as may be requested. The Treasurer will be required to furnish a bond for $1,000, approved by a majority of the Board of Directors, as a security for the faithful performance of his duties.

Sec. 6. All money belonging to the League shall be deposited in the name of "The Exhibitors League" by the Treasurer, in a bank named at the discretion of the Board of Directors, and all checks shall be signed by the Treasurer and President.

Sec. 7. The Board of Directors shall be the sovereign body when the organization is not in session.

ARTICLE V. MEETINGS AND VACANCIES.

Sec. 1. There shall be an Annual Meeting held at such time and place as the Directors of the League think best. A written notice to be mailed to each member at least five days before the meeting takes place.

Sec. 2. In case of a vacancy in any office before the Annual Meeting by reason of death, resignation or other cause, the vacancy shall be filled by vote of the Board of Directors.

ARTICLE VI. MEMBERSHIP.

Sec. 1. All bona fide, responsible motion-picture exhibitors may become members, so long as they are not interested in any branch of the film business, on application with proper fee and receiving a majority vote of the Board of Directors.

BY-LAWS.

ARTICLE I.

Sec. 1. The Board of Directors shall meet quarterly each year, said meetings to be held the first Monday in January, April, July and October, hours and places of meeting to be designated by the President. All members of the League are eligible to attend these meetings. Meetings to be held at Columbus unless members are otherwise notified.

Sec. 2. Notice of such meetings, time and places must be sent to each member at least ten days before the time. The Secretary shall be responsible for these notices.

Sec. 3. A majority of the Board of Directors shall constitute a quorum.

ARTICLE II. INITIATION FEE.

Sec. 1. The Initiation Fee shall be the sum of five dollars, until the next meeting, payable at the time of making application for membership, and shall be refunded if applicant is not elected.

ARTICLE III. DUTIES OF MEMBERS.

Sec. 1. It is the duty of each and every member to notify the President of any invention, picture or anything else that would be of benefit to the members of the organization to know, and it is the duty of the President to so notify all the members of anything pertaining to the moving-picture business that will benefit the members.

Sec. 2. It is hereby made the duty of any and every member of this League who has knowledge or information of unfair or dishonest methods practiced by any other member in the conduct of his business, or any infraction of the Constitution and By-Laws of this League, promptly to notify the President, whose duty it will be to notify, in writing, each member of the Board of Directors within five days after having received such notice. The Directors thereupon shall investigate such charges, and if found to be true, such member shall be suspended until the next League meeting, when permanent action shall be taken by the members.

ARTICLE IV. AMENDMENTS.

Sec. 1. Any proposed amendment to the Constitution shall be handed to the President not less than twenty days before the meeting at which it is to be acted upon. A copy shall be mailed to each member. Such proposed amendment may then be acted upon at the next regular meeting, and passed on a two-thirds majority vote.

Vitagraph Notes

An unusual surprise party and reception at the "Hoff Brau" in Brooklyn last Saturday evening was tendered to President William T. Rock upon his return from Cuba and the West Indies. He was greeted by seventy of the "boys" costumed as a variety of characters. Among them were half a dozen western cowboys who greeted him, after the toastmaster made his introductory remarks, with a volley of shots from their seven-shooters that startled everybody in the house and in the neighborhood. Altogether it was a very novel and delightful affair. There was plenty to eat and some liquids to make convivial the whole company and to make the occasion one of wit and good fellowship. This is one of the little pleasantries that unite the Vitagraph heads with their employees in one common tie of friendship and interest.

Last Monday was the inauguration of the Vitagraph's new lunch room and dining hall, where everything of the best is furnished employees. There is some talk of a club room being established and this will contain a library of current literature and furnish a much-needed addition to the home of the Vitagraph.

Easter is not very far away and people will be looking forward to things peculiar to that season. "Though Your Sins be as Scarlet" is a remarkable portrayal that deals with the better half of one's self, showing that in the worst of us there is the possibility of so much good that though our sins be as scarlet we can lift ourselves to the highest plane of human perfection. The true significance of honest redemption and the general uplifting of mankind, making him a little lower than the angels.

There is another picture that is entertaining, and delightfully novel, touching upon the child's belief of the Easter babies, the stork, and the Easter eggs which produce them. This picture will please the children and the grown-ups.

London Likes Essanay Western Photoplays

That the English photoplay lovers are particularly fond of the wild west drama is illustrated by the extensive advertising by the Empire Theater, a large photoplayhouse in London, of the Essanay Western drama, "The Girl On Triple X."

The "Indian Head" films in London are always favorites with the English audiences, for the remarkable beauty of the scenery and the excellence of stories, acting and photography.

Harry Spoor, the London agent for the Essanay productions, has been unusually successful in the English market and particularly so with the Essanay Company's Western product.

The Cinema House, one of the finest photoplay theaters in the world, recently opened at 225 Oxford street, London, W. The Duchess of Portland presided at the formal opening of the theater, which will specialize on topical and educational subjects. In a recent program, the following photoplays were shown at one performance, "Birds in Their Nests" (ornithology), "Birth of a Big Gun" (manufacture), "In the Twin Falls Country" or "Wonders of Nature," by the Essanay Company (geography), "Romance of Insect Life" (entomology), "Planetary System" (astronomy), "Nero" (history), "Zoological Gardens, Rome" (zoology). This educational program is given by the Cinema every Saturday matinee, and is arranged by the directors of the theater "for the purpose of demonstrating the manifold advantages of education by cinematography."

Solax Comedies Wednesday

Hereafter Wednesday is to be funny day—that is, if the Solax people have anything to say about it.

This popular company has just inaugurated its second weekly release on Wednesday, and to make these offerings more timely has decided to release a comedy on that day. Such an announcement has two strong points to recommend it to the support of both exhibitors and exchange men. First, the independent program has been rather shy on comedies; second, a regular day for a comedy release will please every exhibitor because he can arrange to have a comedy day at his theater. This, if taken advantage of, can be worked up into a feature of no mean proportions.

To further this idea, the Solax Company has secured a series of fine comedy scenarios and already has five completed, in advance of release day. This reserve fund serves as an insurance that this policy will be adhered to and the exhibitor may therefore go ahead and arrange for his comedy day and advertise the same to his patrons.

Still Another New Manufacturer

The Associated Picture Patents Company, organized in New York, with a capital stock of $1,000,000, is about to enter the motion picture manufacturing business. Offices have been opened at 1480 Broadway, and a manufacturing plant is in process of construction.

The company's general manager and secretary is J. Alexander Leggett, formerly with the Vitagraph Company. The new company will not only produce and release its own films, but will make a specialty of printing for other concerns and will be equipped with modern apparatus for that purpose.

It is claimed that the Associated Company will take no part in the present partizan arrangement of the field, but will strive to create an open market for its product. It is also claimed that it has ample means and excellent talent at its disposal.

Newspaper Runs Film Review Contest

The Toledo *Blade* is running an interesting contest for film "fans." Each week cash prizes, first, second and third, are offered for the best film reviews submitted to the *Blade*. The reviews are limited to 200 words and must deal specifically with a film, or series of films, and not contain digressions upon the motion picture theater in general. The contest has proved more popular than even the enterprising *Blade* foresaw. If such contests prevailed throughout the country generally, the practice would result in raising the tone of motion pictures immeasurably. For there is no influence that can be brought to bear on an art so healthy and wholesome as popular criticism.

Cleveland Picture Men Organize

To oppose legislation detrimental to moving picture interests, a movement has been started in Cleveland, Ohio, to organize the proprietors of motion picture theaters. The new organization, as proposed, will also take a determined stand against the so-called motion picture trusts. The exhibitors want a voice in the selection of their films. Meetings have been held for some time past over Weber's Casino in Superior avenue, where the proposed organization has been discussed and action taken to perfect it. Just how soon the men will join hands is not known.

Long Life Rectifier Tube

The serviceability of the mercury arc rectifiers now being extensively used for changing alternating current into direct current for use in moving picture lamps, largely depends upon the length of life of the rectifier tubes.

Mr. Sweeney, chief operator of the Photo Play House, Market street, San Francisco, Cal., reports an example which is of interest to managers of motion picture theaters. He has been using a mercury arc rectifier for nearly a year, running it thirteen hours a day, beginning at 10 o'clock every morning. Up to

the last report the rectifier tube has been operated for 4,290 hours without showing any deterioration in the quality of the service.

Mr. Sweeney hopes to break the record with this tube and does not expect to use the extra tube he received with the apparatus for some time to come.

Danger in Tent Theaters

February 20 witnessed a fire at the Bremen Family theater, Broadway and Bremen avenue, St. Louis, which in three minutes burned to the ground. It was a tent theater and had the fire been at night, when the theater might have been filled with 2,000 persons, it would have been one of the greatest holocausts in the history of the city.

The tent had been oiled several times to make it waterproof, and the oil burned fast. There were six stoves in the tent when the fire broke out, at 12:05 p. m., and it is thought one of them set fire to the theater. Eighteen hundred chairs were burned in the fire, and $2,500 damage was caused. No one was hurt, there being only three men in the place at the time.

Mexican War Films Censored

A report from Los Angeles states the district attorney is advocating a rigid censorship on moving pictures of the Mexican revolution scenes. Many of the film companies take picture here, and two have been quite busy of late at Glendale and the Santa Monica canyon, places which afford excellent scenery for war views. Through a labor agency they have engaged Mexicans as actors.

It is complained that scenes of cruelty and horror have been worked into many of the films. The district attorney takes the position that the presentation of such pictures might cause trouble among Mexicans in this country.

Letters

Editor The Nickelodeon:

This short letter is written with a view to notifying exhibitors in the state of Illinois or elsewhere that if they do not soon organize themselves in a working intelligent organization, they will find they are in the same position that the Indiana exhibitors are in today. A bill has been introduced and engrossed in the legislation of Indiana, known as House Bill No. 157. If this bill is passed it will prohibit the attendance at moving picture theaters of all children under the age of sixteen years, unless accompanied by parent or guardian. The vote to engross the bill was passed by a large majority. Every exhibitor understands what this bill means to business. Every other line of business, commercially and otherwise, is organized in the United States.

The exhibitors should have a national organization, and I would be pleased to hear from exhibitors in regard to forming a national organization. Ohio has a strong Exhibitors' League and we are growing stronger every twenty-four hours. A few of us tried to arouse Indiana and to form an organization almost a year ago, but the exhibitors of the state of Indiana were slow to act and now realize that they have got to fight hard to protect their interests, and combat unjust legislation. If the exhibitors of the state of Illinois are wise they will immediately form an organization and co-operate with our Ohio organization that we may establish a national organization.

The license picture trust is trying to force through the legislature unjust laws and if it succeeds it will own and control absolutely every exhibitor in the United States. Enclosed find copy of constitution and by-laws of the state of Ohio. Any publicity that you may give this matter will be appreciated.—M. A. Neff, *President Ohio Exhibitors' League.*

Editor The Nickelodeon:

Your marked copy of magazine of March 4 particularly referring to note on page 253 of same contains the statement that the Peoples Amusement Company did this advertising. If my communication to you gave that impression, I was in error, as this half page ad, at an expense of $250, was through a subscription on the part of several of the motion picture exhibitors, as well as the General Film Company and the Independent Western, and for that reason the advertisement was of general nature, and without reference to special interests. I make this correction as the Peoples Amusement Company does not desire any honor or credit to which it is not entitled. The licensed and independent exhibitors all contributed their share to the fund.—Peoples Amusement Company, *Melvin G. Winstock, General Manager.*

Synopses of Current Films

Essanay

HANS' MILLIONS.

Hans Sprudel, clerk in Jacob Schmidt's grocery and delicatessen, is discharged because he has the audacity to make love to Lena, his employer's daughter. Hardly has Hans left the house when Mrs. Schmidt reads in the newspaper that Hans is a relative of Peter Sprudel, the steel king of Essen, Germany, lately deceased. Hans, it is claimed, is one of the heirs to the vast fortune. Despair is written in the faces of both the storekeeper and his wife, for their former clerk can be no other than the Hans Sprudel wanted. Schmidt, resolved to get Hans back at any cost to his pride, goes to the young man's lodgings and patting him affectionately on the back, drags him back to the store where he is immediately married to Lena. It is not until then that he is apprised of his good fortune. As it is necessary for Hans to go to Germany to claim his share of the fortune, Schmidt writes out a check for five hundred dollars and gives Hans steamer tickets for Lena and himself. A few weeks later Mr. and Mrs. Schmidt receive the following letter from their son-in-law: "Dear Mother and Father: The estate of Uncle Peter is now settled. Owing to the enormous debts and the fact that we are only one out of hundreds, our share is only one dollar. With love, Lena and Hans."—1,000 feet. Released March 21.

A THWARTED VENGEANCE.

Nell Olcott, a pretty Western girl, is the proprietress of a bar and gambling hall in a little Western village. Needless to say, she has many admirers among the big, uncouth cowpunchers and miners, who respect her wishes that none of them become drunk at her bar or gamble away all their money at her tables. One day she is annoyed by a Mexican who is immediately ejected by Bob Griswold, a miner, whom she favors. The Mexican swears revenge and in a note to Griswold threatens to take his life. Later that day Griswold rescues an injured miner and takes him to his shack where, like the Good Samaritan, he attends to his injuries. That night the Mexican visits Nell Olcott's bar, gags and binds her and takes her to Griswold's shack, lashing her to a post in full view of Griswold's window. He then enters the shack, binds his victim whom he finds slumbering on a couch at the window and after flashing the steel blade before Griswold's face is about to plunge it into his heart when the wounded miner enters the room and overcomes the would-be murderer. The Mexican is driven from the shack where he again attempts to take the life of Nell but is shot down by Griswold.—1,000 feet. Released March 25.

Nestor

COULD YOU BLAME HIM?

Colonel Bailey declared that his nephew, Tom, should be his heir, providing, of course, that young man consulted his uncle in selecting a wife. This, however, was just what Tom neglected to do; for when he married Bess Oakley, he intended that his bride should win over Uncle Joe before the old gentleman learned of their secret. But no sooner had they returned from their honeymoon then Col. Bailey announced his intention of paying Tom a visit, throwing the young couple into a lively state of panic. At last, after a good deal of persuading upon Tom's part, Bess consented to invite his chum, Dick Weldon, to the house and pose as his wife until Uncle Joe's blessing could be assured. The excellent opportunity which it offered of teasing her husband was not to be overlooked, so Dick mischievously assured his schoolfriend, Bess. Consequently the pair made poor Tom's life miserable upon every occasion. It was after one of these "pleasant evenings" when Tom was telling his wife good-night, that Uncle Joe came out of his room, and stood aghast at his nephew's conduct. But this was not all, for having sent the maid to bed, Bess called her husband to unhook her dress. The old colonel stood irresolute for a moment, then marched up to the door and peeped through the keyhole. There was his nephew, whom he had always considered such a fine fellow, embracing another man's wife. Here, however, his thoughts were interrupted; Dick appeared upon the scene. Grabbing him by the coat, the unhappy uncle hustled Dick downstairs, then threw himself into a chair declaring he had an attack of heart trouble, imploring the surprised young man not to leave him, but to ring vigorously for his nephew. The instant he appeared, Col. Bailey

suddenly recovered, and after sending Dick away, lost no time in acquainting Tom of his opinion. So worked up had he become that he absolutely refused to believe his nephew's confession, and it took both Dick and Bess to soothe his ruffled feelings and persuade him to finally see the humor of the situation.—Released March 22.

CUPID'S VICTORY.

Solax

That the course of true love seldom runs smoothly is well illustrated by the actions of this release. Major Calhoun, an aristocratic old southerner of the now almost defunct type, has a charming young daughter who bears the name of Mada. The Major has been unfortunate in business affairs, and finds himself with a mortgaged estate on his hands, the mortgage being held by old Colonel Brandywine, an apparently old sour gentleman who has loved and lost Cynthia, the Major's sister. Colonel Brandywine determines to get even with Cynthia by marrying her niece, and forces the old Majr to consent by holding the mortgage over his head, which he threatens to foreclose. The young girl, however, has intentions of her own and she has engaged herself to Fitzhugh, whom she is determined to marry. Cynthia overhears the arrangement being made between the Major and the Colonel, and informs Fitzhugh of the Colonel's intentions. The young man promptly proceeds to call upon the Colonel and demand an explanation. Their interview is interrupted by the arrival of Cynthia who also has come to remonstrate with him for his lack of manliness. The interview between the Colonel and Cynthia results in a reconcilliation, and they determine to help the young lovers out. The next problem is to get the Major, who has forbidden Fitzhugh the house, to give his consent. They plan that the Colonel will continue his demands for Mada's hand, and that at the marriage ceremony, Cynthia will take her place, wearing one of Mada's dresses and her face covered by a veil. This is done. The old Major sadly leads his daughter to what he believes to be the sacrifice. After the marriage he lifts the veil for a kiss and to his amazement finds the laughing face of Cynthia before him. He is so relieved to find that the Colonel has not married his daughter that he readily gives his consent to Fitzhugh, after the deception is explained to him, and all ends happily.—Released March 22.

OUT OF THE DEPTHS.

Poor little Harry, left alone in the world by the death of his mother, except for a brutal step-father who ill treats him, finds himself forced to steal. Having in mind the promise made to his mother that he would lead an honest life he struggles with the temptations presented to him. Finally he is forced to participate in a burglary. The party is interrupted by the arrival of the police and all make their escape except Harry, who is too small to run so fast. He is caught and sent to the reform school. Years pass; Harry grows to manhood. He secures a position in the banking house of Henrich Bros., and speedily finds himself rising to the front. Grace Henrich, the daughter of the banker, falls in love with Harry, and he reciprocates her love. Having in mind his disgrace, however, Harry feels that he has not the right to press his attentions upon the rich girl. Coming into a saloon one day to collect a check Harry overhears a conversation. He recognizes his stepfather's voice and learns that the members of the gang are planning to rob the very bank that he is employed in. Rushing from the place, Harry warns the banker. The robbers enter, they are caught, but Harry's stepfather, trying to escape, shoots the banker. Harry interposes and he received the shot in his own breast. Later we find Harry convalescent. Grace accompanied by her father goes to see him. Joyous to see Grace, Harry quickly lapses into cold silence. Mr. Henrich cannot understand his emotions and asks for an explanation. Harry tells him of his past. The banker is mightily shocked at first, but soon realizes that the boy should not be condemned for the circumstances which forced upon him the position which resulted in his conviction. and he tells Harry that the barrier that he (Harry) has raised in his own mind is no barrier at all. And all ends happily.—Released March 24.

THE WIDOW VISITS SPRIGTOWN.

Vitagraph

"All that glitters is not gold," it is so with the widow, who visits her cousin Ned at Sprigtown, her hair is golden, she calls it auburn, 'tis false. She is as bald as a bat, but, being a woman of good taste, she has selected a head gear that fits her to a "T" and matches her complexion perfectly. Her mouth is toothless, but well supplied with a set of modern molars, and these, with the necessary plumpers make the widow altogether bewitching. Her appearance in the town creates a sensation and all the classy young fellows fall desperately in love with her, seeking an opportunity to bask in the sunlight of her smiles. The young girls' are left in the cold and become very jealous of the widow. It does not take them long, however, to get wise to her bogus beauty, and by peeping into her boudoir discover all her deficiencies, they put up a scheme to expose them to the young beaus of Sprigtown, showing them how easily they have been fooled by the fake beauty of the charming widow. When she retires the girls steal into her bedroom, take her wig off the dresser and throw it out the window, then make a fire in a can outside her chamber door, and when the smoke thickens, cry fire, call up the volunteer fire department, of which all the boys in town are members, hoping that when they come to the rescue of the widow they will see her in all her baldness and be disillusioned. Their little plot is destined to failure. for she has an admirer who has followed her to Sprigtown, and although he is lame, fat and fifty, he is the first one to hear the alarm and hastens to save the gay deceiver of the boys. He finds her wig beneath the window, and in response to her screams for her golden locks, he secures a ladder, struggles up it round after round, restoring her headpieee and saving her from the ignominy of detection. The brave young firemen arrive, she is conducted to safety, and rewards each one of the heroes with a graceful curl from her golden coiffeur.—Released March 24.

A LITTLE LAD IN DIXIE.

John Lawton, a Confederate soldier, is given a home leave to recover from his wounds in the faithful care of his wife, Mary. Their little son, Bud, a mountain lad of eight, is inspired with the martial spirit of the times, and when his mother makes him a little Confederate flag, he fastens it to a pole takes his father's musket and stations himself at a mountain pass which leads to their home, appointing himself its guardian, and starts on picket duty. He hears footsteps approaching, glancing around he sees Snag Riley, a Confederate deserter, commands him to halt; at that moment the Union forces are seen approaching the pass, little Bud places himself in position of defense, takes aim and fires at the enemy. As he stands to reload his gun he is shot, but never flinches. Snag, ashamed of his own cowardice, hastens to the lad's aid, and with him continues to attack the foe. They cannot resist the force of numbers, Snag falls dead and shortly afterwards Bud reels and drops mortally wounded across his body. His mother and father have not missed their son, but now, when they hear the firing of the musketry from the pass, the mother instantly decides that her boy may be in danger, not heeding the admonition of her husband, she mounts a horse and gallops to the scene of action, where she finds little Bud dying, she lifts him tenderly on her arms and smooths his brow, bathing it with her tears, he proudly points to the pass and tells her he died for the cause, which she and his father espouse. Reverently covering him with the Confederate flag, the Union soldiers stand sorrowfully and admiringly gazing at the form of the manly little hero.—Released March 25.

BILLY'S VALENTINE.

Billy, a bright young fellow, is in love with Molly and frequently calls at her home with the usual results, they fall in love with each other. St. Valentine's Day is coming around, Billy decides to give Molly an affectionate and elaborate valentine, together with a bouquet of flowers. He purchases the tokens of his love, he finds himself in a quandary how to send them, at this moment Kitty, Mollie's little sister, comes along and Billy immediately drafts her into service as a messenger. Kitty, as we have witnessed in some of the previous scenes, has been roughly corrected for some of the pranks which she has played on Molly, and she has decided to get square with her big sister and sees her chance of doing it by taking adavantage of St. Valentine's symbols of Cupid. She changes the pretty valentine to one of the comic kind and substitutes a bunch of vegetables for the bouquet of flowers, tagging them with Billy's card, upon which is written, "You are as pretty as this valentine and sweet as these flowers. Kitty gives them to Molly and when she opens the wrapper, she almost faints, calls her mother and they denounce Billy as a villain and a loafer of the deepest dye. When Billy calls to see her that evening, he receives the "ice pitcher" and the "marble heart." Little Kitty likes Billy, and her conscience troubles her, she confesses to him that she is the cause of all his troubles with Molly, and tells him what she did. Together they go to Molly and her mother, explain matters to them, Kitty professes repentance, asks forgiveness, which is granted through Billy's intercession.—Released March 28.

THE FIELD OF HONOR.

American

Three aspirants for the hand and heart of a young lady who has not evinced any desire to settle down to a humdrum married life are, respectivelly, Colonel Cannonball, a bumptious fire-eater, who has never smelled gun powder; Captain Blowhard, a dry land sailor, and Jack Tunbridge, a young man who is, by far, the most eligible suitor. Jack's attentions are favorably received by the young lady in question, but from a spirit of deviltry she keeps him on the guessing chair and allows each of the other men to imagine he is the only. Jack evolves a scheme by which he can make the two fire eaters appear ridiculous in the lady's eyes and so leave the field clear to himself. He writes a challenge, apparently from the captain to the colonel, daring him to meet him on the field of honor. He delivers the letter to the frightened colonel himself, and only the solemn assurance that the captain should be taught a lesson and in bluffing induces the colonel to answer the note. He writes, at Jack's dictation, a letter to the captain, accusing him of cowardice and daring him, in like manner, to meet him in mortal combat. Jack, in turn, delivers this to the captain and persuades him that it is his duty to call the colonel's bluffs, which he does when convinced that no encounter will ensue. Jack, in the meantime, has taken into his confidence several friends. They prepare everything for the duel. One is to represent himself as the surgeon and is armed with a case of formidable surgical instruments calculated to strike terror in the hearts of their would-be bloodthirsty principals. A brace of pistols are, of course, included in the equipment, the bullets are extracted from the cartridges, and the barrels are loaded up with tabasco sauce. The unwilling and badly frightened combatants are literally dragged by main force from their rooms and driven to the field of honor. They are placed face to face and at a signal the terror-stricken heroes fire. They are too frightened to consider any alternative, but sudden death. and when spattered with the sauce, both fall. Jack has, meanwhile allowed the lady to believe that her foolish flirtations have lead to disastrous consequences. She arrives at the field discovers the joke and leaves, very much incensed. Jack has some difficulty in making her see the absurd side of the case, but she has one redeeming characteristic, a sense of humor, and is soon persuaded to smile, the sign of forgiveness encourages Jack to press his suit to a finish, and he wins out.—985 feet. Released March 20.

THE HAREM SKIRT.

The picture depicts the experience of a lady of social worth and distinction who, in search of something different and odd in the ilne of personal adornment, happens upon an announcement in the daily paper dealing with the reception accorded the harem skirt in Paris. She immediately decides that the skirt is worth while and proceeds to her dressmaker and orders one. The dress being completed, the results are so satisfactory that she decides to wear the dress home and to a social engagement that she has the same day. Her experiences upon appearing on the streets in her odd attire are comical in the extreme. She naturally attracts a crowd which, however, is not abusive; the insult to their outraged decency being so emphatic that it never occurs to them to do otherwise but gasp in astonishment. They are, however, curious as to the outcome of the lady's appearance and follow her; she in the meantime not knowing that she is attracting so much attention, saunters along very much pleased with herself and her new attire. She passes a couple of boys who immediately trail after. mimicing her walk and gesture, likewise two fops of uncertain age perceiving her are of the opinion they would like to make her acquaintance. A crowd gathers and the urchins curious to ascertain the texture of the new harem skirt reach for the same, attract her attention in such wise that she turn around, sees the crowd following, and with a view to escaping the undesired attention of her modeled skirt, starts to run away from them. Then follows a chase. She eventually arrives home where she finds that she has forgotten an important social engagement with some social friends of hers, and in consternation ascertains that she will not have an opportunity of changing her dress. Her experiences after

leaving the dressmaking shop, however, have been such that she hesitates to appear in the presence of her friends in her harem skirt so she compromises by donning an ordinary walking skirt which virtually hides the bizarre effect of the innovation. In her new commonplace attire, she attends the reception being given by her friends, and from this point in the reel to the end the situations are unique, original, and above all extremely funny. On account of the peculiar construction of her harem skirt, the lady naturally is not afraid of mice and astounds her friends at her fortitude in the presence of the small enemy. The reception is virtually broken up by the cry of fire and the advantages of the harem skirt are fully set forth in the ease with which our comical heroine descends the fire escape. The contrast between the new and old mode of dressing is here shown faithfully in the troubles experienced by the women in their efforts in descending a fire escape in long train dresses. The lady of the harem skirt eventually returns home to her husband, who has been awaiting her arrival for a couple of hours—on an empty stomach, and who is prepared to reprimand her severely, but upon seeing the apparition that confronts him upon her sauntering unconcerned into the sitting room, faints away.—930 feet. Released March 23.

TEACHING DAD TO LIKE HER.

Biograph

There is a popular English coster song that begins with the line, "Never Introduce Your Donah to a Pal," which contains more logical advice than we at first thought would assume. The young son of a wealthy widower, who is the leading character of this Biograph comedy, now realizes this to the extreme. Harry is infatuated with Dolly, the show girl, and knowing well that a marriage with any one without Dad's consent would jeopardize his chances of the future with him, proposes to Dolly with the understanding that he first gain the governor's sanction to their union, reasoning that there can be no possible objections as Dolly is an exceptionally nice and pretty girl, who has won the esteem and respect of all who know her. However, it is not as plain sailing as he imagines, for Dad stoutly refuses, considering the mere fact of her being a chorus girl, as marriage to his boy would mean disgrace to the family. The young couple are awfully distressed by the turn of affairs and while the boy makes several attempts to win his Dad over, Dad is adamant. In desperation the boy hits upon a scheme to win his father's consent, which seems good to both of the lovers. The plan is to have Dad meet Dolly and become impressed with her. The boy is sure that Dad will like Dolly if he meets her. Preparations are made for this chance meeting and things move smoothly. The boy induces Dad to take a stroll through the grounds around their mansion and Dolly is to happen by as if by accident. Then the introduction. All goes as it was programmed and the boy leaves Dolly and Dad together using some subterfuge to take himself away. Dad at first refuses to even speak to or look at the girl, but her pleading finally softens his manner enough to argue with her upon the impossibility of such an alliance. The more he sees of her the weaker his determination becomes until things take quite a different turn. The boy all this time is in hiding hoping that Dad will like Dolly. But Dolly, when he sees her as she leaves, is not very encouraging in her information as to Dad's conduct, which discouragement is emphasized by Dad's positive refusal to talk on the matter. The boy, however, notices that Dad takes on quite a different air; he is quite gay and debonair in both dress and manners. On the other hand Dolly is less effusive and seems to have other engagements. He asks himself has she another suitor—if so, who? He discourages this thought, with a reasoning that her actions may be affected to urge him on, so he, in defiance to his Dad, goes and buys the ring. His one bothersome question is, "Does Dad Like Her?" He soon finds the answer, for he calls on Dolly to find that Dad likes Dolly and Dolly likes Dad unusually—so much so that the cards will be out in a few days announcing the nuptials of Dad and Dolly.—995 feet. Released March 20.

THE LONEDALE OPERATOR.

"Keep your wits about you," at all times for they are the most valuable asset in times of danger. A cool head will win over an excitable brain as this Biograph subject will show. Lonedale hardly belied its name, for it was the most isolated spot in the western country. The principal reason for its being on the railroad map as a stopping place was the fact that it is the location of a productive mine. The station is in charge of an old operator and his daughter, who take turns at the key. Of course, as in small stations, the operator is a sort of all-round individual who attends to everything. The young engineer who makes the run between Lonedale and civilization is the sweetheart of the operator's daughter; and upon receiving his call on this particular day he escorts her to the station, where, finding her father suffering from a nervous headache, she takes his place at the key after bidding adieu to her engineer sweetheart as he mounts into the cabin of his engine and rolls away. As her father leaves he discovers that his revolver is out of order and takes it with him to fix it, assuming that there is no danger of her having any use for it. The old operator has forgotten, however, that this is the first of the month on which a large sum of money is expressed to the station from the city office of the Lonedale Mining Company for the pay-roll. The girl is apprised of this shipment by telegraph from the express messenger where the shipment is made. The train pulls in and she receives the express bag of money. Two ugly looking tramps who are riding the rods see this delivery and assuming that the girl is in charge get off to take their chances of securing the money. The train having departed the tramps start their work. The windows all being heavily barred they make for the back door, which the girl, hearing an unusual noise, hastens to lock. They find it an easy matter to break through this, but are further handicapped by the inner doors which she has also locked and barred. After locking the doors she rushes to the telegraph key and sends a call for help to the next station, some miles up the road, where she knows the train will stop. The operator there gets a hurry order from the train dispatcher to send the engine "With right over all trains" to Lonedale with help, and off rushes the locomotive, driven by the girl's sweetheart, he in terrific anxiety as to her apparent danger. Meanwhile the tramps are slowly but surely making their way through the barriers to the room where the money is guarded by the girl. She is terrified with the knowledge of being unarmed. Still, she keeps her wits and when the thieves finally break into the room they find it in almost absolute darkness, as the girl has thoughtfully turned out the light and by the gleam of the moonlight that penetrates the window they see the girl's outstretched arm and hand holding a streak of dangerous looking steel directed full in their faces which forces them to cower in the corner. On, on rushes the engine until Lonedale is reached and a dash into the station is made by the engineer and fireman who find the two would-be burglars held at bay by a weak woman armed with a nickel-plated monkey wrench which the tramps in the dark mistook for a pistol. The part of the engineer was played by an actor who is also a locomotive engineer.—998 feet. Released March 23.

Expressions We Frequently Hear

"Showing to Capacity."

Among the Picture Theaters

ROLL OF THE STATES.

ARIZONA.

The Interstate Theater Company, of Los Angeles, has leased a site in Bisbee and will erect an airdome to be known as the Coliseum, which will be ready to open to the public April 1, if the weather will permit. This company will operate in Bisbee, Tucson, Cananea and Deming, N. M., conducting what is known as the Bett Levy Circuit. The program will consist of moving pictures and vaudeville. The airdome will be used during the summer, but a theater will be erected before cold weather.

CALIFORNIA.

Plans have been prepared for a modern theater and store building to be erected at the southeast corner of Third and C streets, San Diego, by W. J. Fulkerson. Estimates are to be taken on a five and seven story building. One story will be built at once, but the walls and foundation will be of sufficient strength to sustain four or five additional stories. The building will be of fireproof construction, being constructed of brick, steel and concrete. The plan of the theater, which is to be operated as a first class moving picture house, is unique. It will be the first of its kind in that city and it is claimed there are only three or four others like it in America. The principal feature is the relative arrangement of the entrance, seats and stage. The main entrance will be located at the street corner with the stage in the opposite corner. Special attention will be given to the arrangement of seats and to exits, to insure the safety and convenience of the public. A center aisle will extend diagonally through the auditorium from the entrance to the stage. Wide aisles will also be provided along the four walls and one on either side of the center aisle. The main entrance will also be an original feature, consisting of a circular lobby, with the ticket office in the center. The lobby will be ornamented with imposing architectural features, including a dome ceiling and mosaic wall treatment. The auditorium will have a concrete floor and a seating capacity of 950.

The first playhouse to be built in Berkeley will be erected at the corner of Shattuck avenue and Haste street at a cost of $40,000. The house will be thoroughly up-to-date, furnished with all modern appliances and will be devoted to vaudeville and moving pictures. Enoch Merrill is promoting the enterprise.

The Lincoln is the name of a handsome new moving picture house recently opened at Alameda under the most favorable circumstances. The house has a seating capacity of 500 and it is the purpose of the proprietors to supply the public with high grade entertainment. On opening night the house could not accommodate the crowds and many were turned away.

S. U. Anderson, a pioneer in the moving picture business, is now sole proprietor of the Alhambra Theater, of San Pedro, having purchased the interest of his partner, George Ring. Mr. Anderson also operates the Star Theater.

Clune's Theater, recently opened at Pasadena, is said to be the largest moving picture theater in Southern California, having a seating capacity of 1,500.

Messrs. J. L. Peters and S. Elmendorf have purchased the Idyl Hour Theater at Hollywood. Mr. Peters also operates the Angelus Theater at 9th and Central avenues, Los Angeles.

The Mission Theater of Monrovia, formerly owned and operated by Roy Bart, has been purchased by two ladies, who will continue to operate it.

The San Jose Local No. B 11 of the Moving Picture Operators' Union, an auxiliary to the International Alliance of Theatrical Stage Employees, has been granted a charter and the officers are as follows: President, Roy Anthon; secretary-treasurer, Patrick O'Dea. It is stated that nearly all of the moving picture theaters in San Jose have officially recognized the union and agreed to a uniform schedule.

COLORADO.

Messrs. Schoelkopf and Moscript will open a moving picture theater in the Marchington building, Idaho Springs, about April 1.

The Royal is the name of a new moving picture theater opened at Longmont by A. L. Buckley. C. W. Darbey, of Chicago, operates the machine. Mr. Darbey assisted in the preparation and installation of the fixtures.

DELAWARE.

The Runy Amusement Company of Wilmington has been incorporated to operate moving picture and other theaters. The capital stock is $100,000 and the incorporators are David E. Brogan and Henry W. Schoor of Philadelphia, and Sylvester D. Townsend of Wilmington.

FLORIDA.

The Imperial is the name of a new moving picture theater to be erected on Forsyth, between Ocean and Main streets, Jacksonville, by J. Millar Wilson. It will be devoted to pictures exclusively.

The Astoria is the name of a handsome new moving picture theater opened at the corner of Bay and Hogan streets, Jacksonville, by A. B. Vance and associates, under the management of Harry K. Lucas, an amusement manager of long experience. The new house has a corps of capable and courteous attaches, ever ready to look after the interests of its patrons. Approximately 1,100 people attended the performances given on the opening night. The theater is modern and up-to-date in every detail and is cozy and comfortable throughout.

GEORGIA.

Atlanta is to have one of the most up-to-date and largest moving picture theaters in the South. It will have a seating capacity something over 800, and its equipment will cost between $20,000 and $25,000. Messrs. John G. Evins and A. C. Evins, proprietors of the Vaudette, a motion picture house located on Whitehall street, near Mitchell, are promoting the enterprise. They hope to have the theater ready to open to the public by September 1.

Messrs. Fred E. May and George S. Harris have purchased a moving picture theater at Barnesville, which they will operate under the name of the "Pass-Time." It is the intention of the new management to present clean, up-to-date programs which will not only entertain, but will instruct as well.

ILLINOIS.

James Sutherly, of Danville, has leased the opera house at Rossville and will open a moving picture theater therein. The lease extends until the first of May and if the venture proves a success it will be renewed.

The Majestic Life Motion Picture Theater of Danville, formerly owned by A. L. Willis, has been purchased by I. N. Martin, of Bloomington, who will remodel and enlarge the place, making a number of improvements both in the exterior and interior. Mr. Martin operated a string of picture houses at Bloomington, Galesburg, Quincy, Peoria and Springfield, but will give his attention to the local house.

Louis P. Daley will open a moving picture theater in Carlinsville. The house will be comfortably arranged, well ventilated and will have a seating capacity of 400. A 12-horse-power gasoline engine and a large dynamo will be located in the basement to furnish lights and power.

The Majestic theater at Freeport, formerly under the management of Messrs. Guiteau and Baumgarten, is now conducted by Messrs. Graham and Baumgarten, Mr. Graham having acquired the Guiteau interest. The proprietors will incorporate the business into a stock company to be known as the Majestic Amusement Company.

Messrs. Love and Shanks have opened a moving picture theater at Tampico. The opening was attended by large crowds, every seat being taken, and many standing.

F. A. Price, of Elgin, has organized a company to manufacture his patented mirrored curtain for moving pictures. Attorney R. Waite Joslyn will be president and Mr. Price, general manager.

The Lyric moving picture theater at Paxton was recently purchased by A. Weatherly, who will continue to operate the same and will give his patrons clean, up-to-date entertainment.

Fred A. Ross, of Moline, will open a moving picture theater in East Moline.

Noah Weignant is now sole owner of the Wicker and Weignant moving picture theater of Carmi, having purchased his partner's interest.

INDIANA.

The Dreamland theater at Winchester has installed a new screen, which has added greatly to the attractiveness of its program, as the pictures are brought out to best advantage.

IOWA.

A. O. Lawrence of Cheyenne, Wyo., and F. L. Jones of Des Moines, who have purchased the Majestic moving picture theater at Osceola, announce they will conduct a high grade house and will spare no efforts to please their patrons.

A new moving picture theater has been opened at Clinton under the management of Johann Johannsen and Company.

Webster City is to have another moving picture theater. the Isis, which will be opened in the building formerly occupied by the Family theater, in the heart of the busines sdistrict. F. L. Greely and H. L. Wise are the new proprietors. The policy of the house will be straight moving pictures with only an occcasional vaudeville bill. The house is being fitted up with modern equipment, is seated with opera chairs and will be operated in such a manner as to deserve the patronage of the people. Nothing but the best grade films will be given.

The Empire is another new house to be opened in Webster City.

KANSAS.

The Crescent is the name of a new moving picture theater recently opened at Plainville by E. R. Melotte.

The Photo Play, a handsome new moving picture theater, has been opened at Concordia by Messrs. Auten and Embry, of Clyde. The house is provided with comfortable opera chairs and has a seating capacity of 300. It will be under the management of Mr. Embry, as Mr. Auten operates a similar house at Clyde.

LOUISIANA.

The Elks Theater, of Baton Rouge, will be converted into a moving picture theater at the close of the theatrical season, and will be conducted as such during the summer.

MARYLAND.

The Photo Players of Baltimore is the name of a club the purpose of which is the promotion of talking pictures, and to teach men and women how to talk "behind the sheet." Among those interested in the project are Messrs. George Skillman, manager of Een Spencer's Lyceum, William O'Brien, Lewis Fields, Robert North and others.

MASSACHUSETTS.

The Globe, 120 Main street, is a late addition to the amusement houses of Springfield. The house will be conducted by the Globe Amusement Company, under the management of F. S. Eager, and the program will consist of vaudeville and moving pictures. The Spa theater, at Pittsfield, is also operated by this company.

The Scenic Temple of Clinton, which has been closed for some time, has been leased by Joseph A. Jasper of New London, Conn., who will reopen same after making some changes and improvements which will add both to its size and its appearance. The policy of the house will be moving pictures and vaudeville and the admission will be ten cents for the evening and five and ten cents for afternoon sessions.

MICHIGAN.

A. J. Gillinham of Grand Rapids, well known in the moving picture field, and E. M. Smith, who now own most of the

vaudettes in that city, will erect a new vaudeville theater at 104 canal street, which will be ready to open to the public about September 1. The theater when completed will contain a balcony and will seat about 1,000 people. Work will begin about May 1 and the house will cost about $25,000.

The Ideal, a moving picture theater at Holland, has been purchased by J. McBride of Tiffin, Ohio, who will remodel it.

MINNESOTA.

The Plymouth is the name of a new moving picture theater opened recently at Plymouth avenue and Third street, Minneapolis, by Mrs. Clara Sigfried.

The Gem moving picture theater of Owatonna, formerly conducted by Messrs. Latham and Stout, is now under the management of Messrs. Stout and Harvey, Mr. Latham having disposed of his interest to W. I. Harvey. It is the purpose of the new management to maintain the same high grade entertainment and if possible, improve the same.

A company was recently organized at Duluth with a capital stock of $100,000 of which J. H. Free, owner of the Happy Hour theater of that city, is president and general manager, and David A. Kelly, secretary and treasurer. It is the purpose of the company to operate a chain of small theaters through the northwest. It is proposed to erect or secure ten or twelve of these theaters in cities reaching all the way from Winnipeg on the north to Montana on the west. They will all be known as Family theaters and the program will be vaudeville and moving pictures. Admission will be from ten to twenty cents, depending upon the size of the town. It is expected to operate theaters costing about $12,000. It is claimed this class of houses has been the most successful, paying in some cases, where the experiment has been made, 21 per cent on the investment.

MISSOURI.

Glenn Clark and Harry Pratt of Warrensburg will conduct an airdome in that city during the spring and summer and the program will consist of moving pictures and vaudeville.

The Lyric moving picture theater at Louisiana, formerly owned by Messrs. Parks and Emerson, has been purchased by Fred Schneberlin and Arthur C. Espenschied of Mascoutah, Ill., who will operate the same. F. A. Anderson, who has had charge of the Lyric, will devote his time to the Nickelodeon theater.

The Photoplay, a moving picture theater at Carthage, was recently damaged by fire. The loss included the picture machine and some films. E. S. Harris is proprietor.

MONTANA.

The New Grand of Missoula, recently purchased by the Montana Amusement Company, which owns and operates a number of similar houses in the state, has been overhauled and remodeled and reopened to the public under the management of Paul E. Noble. The program will consist of moving pictures and vaudeville. The house is supplied with a five-piece orchestra.

NEW JERSEY.

Charles W. Ritter, manager of the Empire theater at Red Bank, will erect a new moving picture house at Rahway, which will have a seating capacity of 900. Mr. Ritter will also open a vaudeville and moving picture house at Manasquan, which will accommodate 800 and as this is the only amusement place of the kind in that section no doubt the new enterprise will meet with success.

The Casino moving picture theater at Washington has been purchased by Herbert T. Drake, a well known moving picture man of Faston, Pa., who will conduct it on the same high plane as his others.

The International Amusement Company of Camden has been incorporated with a capital stock of $100,000 for the purpose of manufacturing films for moving pictures, etc. The incorporators are F. R. Hansell, G. H. B. Martin and J. H. McPeak, all of Camden.

NEW YORK.

The Hudson Motion Picture Company, Brooklyn, has been incorporated with a capital stock of $3,000. The incorporators are Justin S. Gallard, Andrew Foulds, Jr., Adelbert W. Bailey, all of 25 Broad street, New York City.

Plans have been filed for a moving picture theater to be erected at Third avenue and 116th street, New York City, by Jacob Schwartz, 820 Broadway, at a cost of $8,000.

The G. & M. Improvement Company, recently incorporated at Brooklyn, will erect a moving picture theater at Bushwick and Flushing avenue, at a cost of $15,000.

OHIO.

The Princess is the name of a new moving picture theater recently opened at Delphos by H. H. Lampe.

A new moving picture theater will be opened at Alliance under the management of Lou Russell.

The Star, one of Dayton's best and most up-to-date moving picture theaters, has made daylight pictures a permanent feature, which adds greatly to the attractiveness of that already popular house.

The Empress, a handsome new moving picture theater of Toledo, has been opened at 406 Summit street under the management of J. Bernard, formerly manager of the Arcade theater. The house is entirely fireproof, brilliantly lighted and no expense has been spared in providing for the comfort and enjoyment of its patrons. A new aluminum curtain has been installed which adds much to the attractiveness of the pictures.

The Sun theater of Marion was recently purchased by the Klepinger Brothers of Dayton, who operate a chain of theaters throughout Indiana and Ohio. In order to enlarge the circuit they purchased the Sun in Marion and the Orpheum in Mansfield. The Sun is devoted to vaudeville and moving pictures of an educational nature.

Messrs. Shisler and Buchman, proprietors of the Star theater at Delaware, have installed a system of 30 electric bells, representing as many musical keys, which is quite an innovation, as tuned bells for use in moving picture houses is something new. The Hippodrome at Columbus is said to be the only theater in the state thus equipped.

PENNSYLVANIA.

Lincoln Square, a new moving picture theater, was recently opened at 49th street and Woodland avenue, West Philadelphia.

Peter Geneas of New York, proprietor of several moving picture houses in that city and a number of others in Trenton, Newark and Passaic, has been negotiating for a site in Scranton on which to erect a moving picture theater. W. F. Vaughan of Scranton, is representing Mr. Geneas in that city.

The Grand is the name of a handsome and comfortable moving picture theater recently opened at Beaver Falls with a capacity of 350, by M. J. Gibbons and others.

The Family theater at Milton will run pictures on nights when not occupied by other attractions and the admission will be five cents.

The Palace is the name of a new moving picture theater shortly to be opened at East Greenville.

We have just learned of the death of W. H. Prescott, which occurred very suddenly February 26, 1911, at his home, 430 Henry street, Camden, N. J. For a time Mr. Prescott served The Nickelodeon most efficiently in the capacity of correspondent in Philadelphia and vicinity.

TEXAS.

George K. Jorgenson, owner of the Crystal vaudeville theater and Crystal moving picture theater of Galveston, has purchased the Galvez theater of that city for a consideration of $23,000. The new owner will expend about $10,000 in improvements. When completed the house will have a seating capacity of 1,300 and will be devoted to high class attractions and moving pictures. Mr. Jorgenson is the pioneer of the moving picture business in Galveston.

The Palace moving picture theater of Port Arthur has been purchased by Aldo Lombardi, who also owns the Olympic moving picture theater of that city. The former is located on Proctor street, between Dallas and Fort Worth avenues and the latter on Proctor, between Fort Worth and Austin avenues.

Messrs. M. E. Scott and F. C. Dorgan of La Porte have leased Sylvan Beach Park at that place for the season and among the new features to be introduced will be the erection of an airdome for vaudeville and moving pictures.

VIRGINIA.

Norfolk's newest moving picture theater, the "Fotosho," was recently opened at 242 Main street and is drawing large crowds with its exceptionally attractive programs.

WASHINGTON.

It is announced that when the new Orpheum theater, at the corner of Third avenue and Madison street, Seattle, is completed the old Orpheum, at Third avenue and James street, will be converted into a moving picture house. The present Orpheum has a seating capacity of 2,600. Both houses are owned by John W. Considine. It is stated the proposed picture house when completed will be the largest of its kind in the world.

Messrs. Black and Collett have opened a moving picture theater at Granger.

WISCONSIN.

A new moving picture theater is being erected at Teutonia avenue and Hadley street, Milwaukee, by Mrs. Anthony Dahlman.

Record of Current Films

Believing the classification of film pictures by the nature of their subjects to be of greater importance to the exhibitor than classification by maker, The Nickelodeon has adopted this style in listing current films. Exhibitors are urged to make use of this convenient tabulation in making up their programs. Films will be listed as long in advance of their release dates as possible. Film manufacturers are requested to send us their bulletins as early as possible. Reasonable care is used, and the publishers cannot be responsible for errors.

LICENSED

Date.	Title.	Maker.	Length.
	DRAMA		
2-20	The Diamond Star	Biograph	996
2-20	The Padre	Selig	1,000
2-20	The Test	Lubin	1,000
2-20	A Soldier	Pathé	761
2-21	The Rival Sculptors	Edison	990
2-21	The Plot that Failed	Gaumont	815
2-21	A Tale of Two Cities—Part 1	Vitagraph	
2-22	The Open Road	Kalem	995
2-22	The Golden Sickle	Eclipse	882
2-23	His Daughter	Biograph	997
2-23	My Prairie Flower	Melies	980
2-23	The Seminole's Sacrifice	Selig	
2-24	The Price of Victory	Edison	1,000
2-24	Priscilla and the Pequot	Kalem	925
2-24	A Tale of Two Cities—Part 2	Vitagraph	
2-25	The Outlaw and the Child	Essanay	1,000
2-25	A Tale of Two Cities—Part 3	Vitagraph	
2-25	The Changeling	Pathé	1,000
2-25	Paganini and the Countess Beatrice	Gaumont	998
2-27	The Lily of the Tenements	Biograph	996
2-27	The Eye of Conscience	Selig	1,000
2-28	The Iron Master	Edison	
3-1	Sailor Jack's Reformation	Kalem	1,005
3-1	Comrades	Eclipse	638
3-2	The Heart of a Savage	Biograph	991
3-2	In the Hot Lands	Melies	980
3-2	The Outbreak	Selig	1,000
3-3	The Writing on the Blotter	Edison	
3-3	Mexican Filibusters	Kalem	1,005
3-3	Bertha's Mission	Vitagraph	
3-3	Satan Defeated	Pathé	750
3-4	On the Desert's Edge	Essanay	1,000
3-4	The Tramp's Find	Gaumont	670
3-4	Jealousy Foiled	Pathé	1,000
3-4	Mammy's Ghost	Vitagraph	
3-6	A Decree of Destiny	Biograph	995
3-6	Vanity and Its Cure	Lubin	1,000
3-6	The Little Shepherdess	Selig	700
3-7	The Little Drudge	Essanay	1,000
3-7	Love and the Stock Market	Edison	1,000
3-7	The Wild Cat Well	Vitagraph	
3-8	The Old Family Bible	Edison	300
3-8	Red Deer's Devotion	Pathé	1,000
3-8	The Fury of a Woman Scorned	Eclipse	720
3-9	Conscience	Biograph	995
3-9	The Medallion	Selig	1,000
3-9	The Snake in the Grass	Melies	980
3-10	How Bella Was Won	Edison	1,000
3-10	The Mission Carrier	Kalem	1,000
3-10	Undying Love	Pathé	720
3-11	His First Sweetheart	Gaumont	560
3-11	A Lonely Little Girl	Pathé	1,000
3-11	Red Eagle	Vitagraph	
3-13	The Code of Honor	Selig	1,000
3-14	All For the Love of a Lady	Edison	990
3-14	The Sword and the Cross	Gaumont	840
3-15	The Department Store	Edison	625
3-15	Redemption	Eclipse	508
3-16	Was He a Coward?	Biograph	994
3-16	The Schoolmarm of Coyote County	Melies	980
3-16	The Man From the East	Selig	1,000
3-17	The Wedding Bell	Edison	1,000
3-17	A War-Time Escape	Kalem	980
3-17	The Aching Void	Vitagraph	
3-17	The Inventor's Rights	Pathé	784
3-18	The Faithful Indian	Essanay	1,000
3-18	The Privateer's Treasure	Gaumont	860
3-18	The Sheriff's Daughter	Pathé	1,000
3-21	The Test of Love	Edison	
3-21	The Lieutenant's Wild Ride	Gaumont	1,002
3-21	Though the Seas Divide	Vitagraph	
3-22	A Sawmill Hero	Kalem	960
3-22	The Cattle Rustlers	Pathé	
3-22	The Money Lender	Eclipse	688
3-23	The Lonedale Operator	Biograph	998
3-23	The Way of the Transgressor	Selig	1,000
3-24	The Disreputable Mr. Reagan	Edison	
3-24	Rescued from the Desert	Kalem	990
3-24	Love Proves Stronger than Duty	Pathé	
3-25	Cupid's Conquest	Gaumont	595
3-25	The Renegade of the Ranch	Pathé	
3-25	A Little Lad in Dixie	Vitagraph	
3-25	A Thwarted Vengeance	Essanay	1,000
	COMEDY		
2-21	Their Wedding Gifts	Essanay	580
2-21	Just as the Clock Struck Nine	Essanay	412
2-22	Mr. Bumptious, Detective	Edison	990
2-22	Hubby's Troubles	Pathé	672
2-23	Dobbs, the Dauber	Lubin	1,000
2-24	Who Killed Max?	Pathé	689
2-24	An Escape of Gas	Pathé	302
2-27	Nan's Diplomacy	Lubin	1,000
2-27	Max Makes Music	Pathé	403
2-27	Pots, Pans and Poetry	Pathé	531
2-28	Taming a Tyrant	Essanay	1,000
2-28	Matrimonial Epidemic	Gaumont	813
2-28	Captain Barnacle's Courtship	Vitagraph	
3-1	Rival Candidates	Edison	
3-1	Oh, You Clubman!	Pathé	1,000
3-2	Father's Birthday Ring	Lubin	700
3-2	Woman's Curiosity	Lubin	300
3-4	Forbidden Cigarettes	Gaumont	335
3-6	Max Embarrassed	Pathé	600
3-6	An Oriental Abduction	Selig	300
3-6	After the Boxing Bout	Pathé	375
3-7	The Barber's Daughter	Gaumont	505
3-7	The Ambitious Bootblack	Gaumont	450
3-8	A Night of Terror	Edison	700
3-8	The Irish Honeymoon	Kalem	950
3-9	His Friend the Burglar	Lubin	1,000
3-10	The Bridegroom's Dilemma	Vitagraph	
3-11	The Romance on "Bar O"	Essanay	1,000
3-13	Max's Feet Are Pinched	Pathé	489
3-13	Whiffles' Courtship	Pathé	500
3-13	Comrades	Biograph	998
3-13	The Actress and the Singer	Lubin	1,000
3-14	Oh, You Teacher	Essanay	1,000
3-14	Betty Becomes a Maid	Vitagraph	
3-15	Baby's Fall	Edison	375
3-15	The Hunter's Dream	Kalem	365
3-15	Oh, You Kids!	Pathé	690
3-16	Mandy's Social Whirl	Lubin	1,000
3-18	Davy Jones, or His Wife's Husband	Vitagraph	
3-20	Teaching Dad to Like Her	Biograph	995
3-20	Her Artistic Temperament	Lubin	1,000
3-20	Max Is Stuck Up	Pathé	
3-20	How Tommy's Wit Worked	Pathé	
3-20	Her Words Came True	Selig	1,000
3-21	Hans' Millions	Essanay	1,000
3-22	Who Gets the Order	Edison	
3-23	Bridget and the Egg	Lubin	500
3-23	The Spinster's Legacy	Lubin	500
3-24	The Widow Visits Sprigtown	Vitagraph	
	SCENIC		
2-22	Felling a Smoke-Stack	Eclipse	113
2-22	Province of Laos, Indo-China	Pathé	321
3-1	Beauties of San Souci	Eclipse	362
3-3	Around Constantina, Algeria	Pathé	200
3-8	The Beautiful Wye Valley	Eclipse	300
3-11	The Beautiful Gorges of Tarn	Gaumont	415
3-10	Regatta Along the Mekong River	Pathé	220
3-14	Breakers In the Clouds	Gaumont	155
3-15	The Thames From Richmond to Oxford	Eclipse	472
3-18	Rocky Caves of France	Gaumont	110
3-22	Nemours and the Banks of the River Loing	Eclipse	320
3-25	The People of the Arabian Desert	Gaumont	405
	INDUSTRIAL		
3-15	The Diver	Kalem	565
3-17	Pepper Industry in the Malay Peninsula	Pathé	190
3-24	Native Industries in Cochin, China	Pathé	
	SCIENTIFIC		
2-21	Pictures in Chemistry	Gaumont	175
	SPORTS		
2-20	A Buffalo Hunt	Pathé	236
2-28	Lafont and Pola's Last Flight	Gaumont	185
	ACROBATIC		
3-15	The Paoli Brothers	Pathé	295

DAILY LICENSED RELEASES.

MONDAY: Biograph, Lubin, Pathé, Selig.

TUESDAY: Edison, Essanay, Gaumont—Kleine, Vitagraph.

WEDNESDAY: Edison, Kalem, Eclipse—Kleine, Pathé.

THURSDAY: Biograph, Lubin, Melies, Selig.

FRIDAY: Edison, Kalem, Pathé, Vitagraph.

SATURDAY: Essanay, Gaumont—Kleine, Pathé, Vitagraph.

INDEPENDENT

Date.	Title.	Maker.	Length.
	DRAMA.		
2-20	The College Spendthrift	American	900
2-20	The Heart of a Warrior	Eclair	683
2-20	Pictureland	Imp	1,000
2-20	A Lifetime Penance	Yankee	
2-21	For Washington	Thanhouser	
2-21	The Way of the Red Man	Bison	900
2-22	The Redeeming Angel	Ambrosio	500
2-22	The Old Man and Jim	Champion	950
2-22	A Plain Tale	Reliance	900
2-22	His Father's House	Nestor	1,000
2-23	Strategy	American	980
2-23	Artful Kate	Imp	1,000
2-23	The Story of a Prayer Rug	Rex	
2-23	Little Souls	Itala	900
2-24	The Fate of Joe Dorr	Bison	900
2-24	A Child's Prayer	Lux	534
2-24	Love's Test	Solax	
2-24	A Newsboy Hero	Thanhouser	
2-24	The Woman Who Dared	Yankee	
2-25	Across the Mexican Border	Powers	
2-25	Tangled Lines	Reliance	900
2-25	His Great Duty	Great Northern	
2-27	The Sheriff's Sweetheart	American	800
2-27	Punch	Eclair	595
2-27	All for Gold	Yankee	
2-27	A Manly Man	Imp	1,000
2-28	The Call of the Heart	Powers	950
2-28	The Little Mother	Thanhouser	
2-28	A Warrior's Faith	Bison	900
3-1	A Western Girl's Choice	Champion	950
3-1	The Trump Card	Reliance	900
3-1	The Professor's Romance	Nestor	990
3-1	The Trump Card	Reliance	900
3-2	Nina's Doll	Itala	900
3-2	College Chums	American	975
3-3	Stage Struck	Thanhouser	
3-3	Owanee's Great Love	Bison	900
3-3	Jack's Lucky Horseshoe	Lux	530
3-4	From the Valley of Shadows	Reliance	900
3-4	Home Sweet Home	Powers	950
3-4	The Rival Servants	Great Northern	
3-6	Memories	American	375
3-6	King Phillip and the Templars	Eclair	975
3-6	Tracked	Imp	1,000
3-6	Angel of the Bowery	Lux	
3-7	The Mummy	Thanhouser	
3-7	Dick Farrell's Prize	Bison	900
3-8	In the Commissioned Ranks	Nestor	
3-8	A Trick of Fortune	Reliance	900
3-8	Out of the Arctic	Solax	
3-8	The Vindication of John	Champion	950
3-8	Prisoner of Caucasus	Ambrosio	900
3-9	The Rich and the Poor	American	1,000
3-9	The Message in the Bottle	Imp	1,000
3-9	Nobility	Itala	900
3-9	The Fall of a Knight	Rex	958
3-10	The Senorita's Sacrifice	Lux	
3-10	The Spirit Hand	Thanhouser	1,000
3-10	Her Prisoner	Bison	900
3-11	The Son of the Executioner	Great Northern	
3-11	Ever the Accuser	Reliance	900
3-11	A Gamble With Love	Powers	
3-13	The Secret of the Palm	Imp	1,000
3-13	The Test of Love	Yankee	
3-13	The Penalty	American	975
3-14	His Younger Brother	Thanhouser	
3-14	Starlight, the Squaw	Bison	900
3-14	Come Back to Erin	Powers	
3-15	Come Unto Me	Reliance	900
3-15	The Girl and the Oath	Champion	950
3-15	Was It Worth While?	Nestor	1,000
3-15	A Coward	Ambrosio	500
3-16	The Fisher Maid	Imp	1,000
3-16	Where the Shamrock Grows	Rex	950
3-16	A Dog and Two Mistresses	Itala	900
3-17	Robert Emmet	Thanhouser	
3-17	His Double Treasure	Yankee	
3-17	The Sacrifice of Silver Cloud	Bison	900
3-17	The Hindoo Prince	Solax	
3-18	His Mind's Tragedy	Powers	
3-18	Between Love and Duty	Great Northern	
3-18	At Swords' Points	Reliance	900
3-20	Cain	Eclair	790
3-20	In Old Madrid	Imp	1,000
3-20	The Open Gate	Yankee	950
3-21	Divorce	Thanhouser	
3-22	The Pay Roll	Champion	950
3-22	When the Red Turned Gray	Reliance	900
3-23	The Penniless Prince	Imp	1,000
3-24	The Tramp	Thanhouser	
3-24	Love's Ebb and Flood	Yankee	945
3-25	Ogallalah	Powers	
	COMEDY		
2-22	Tweedledum Is Shy	Ambrosio	500
2-24	Matilda Chased	Lux	354
2-25	Foolshead's Present	Itala	500
2-25	The Havana Cigar	Itala	500
2-27	The Silence System	American	200
2-27	Beware of the Bomb	Eclair	370
3-1	Tweedledum, Aviator	Ambrosio	900
3-2	By the Light of the Moon	Rex	900
3-2	The Dynamiters	Imp	500
3-3	A Costly Pledge	Solax	
3-3	The Abandon of Parson Jones	Yankee	
3-3	On Their Honeymoon	Lux	400
3-4	Coto and the Flag	Itala	500
3-4	Foolshead, More Than Usual	Itala	500
3-6	Hypnotizing a Hypnotist	American	615
3-7	When Masons Meet	Powers	
3-7	The Bandit's Surprise	Powers	
3-10	Bill In Love Again	Lux	432
3-10	Jones' Remedy	Lux	524
3-10	Put Out	Solax	
3-11	A Gamble With Love	Powers	
3-11	Foolshead Shooting	Itala	900
3-13	An Unforseen Introduction	Eclair	500
3-13	A Day of Storms	Eclair	400
3-15	Adventures of a Countryman in Town	Ambrosio	500
3-15	A Midnight Visitor	Solax	
3-16	The Job and the Girl	American	600
3-16	Do You Know This Woman?	American	370
3-17	Dogs Not Admitted	Lux	534
3-17	Bill Has Kleptomania	Lux	380
3-18	Toto on the Stage	Itala	500
3-18	Foolshead in Soiree	Itala	500
3-20	The Field of Honor	American	985
3-21	Waiting at the Church	Thanhouser	
3-21	Just Kids	Powers	
3-22	Could you Blame Him?	Nestor	
3-22	Cupid's Victory	Solax	
	SCENIC.		
2-20	Hospital for Small Animals	Eclair	286
2-21	The Mexican Centennial	Powers	
3-2	Army Maneuvers in Cuba	Imp	500
3-18	Life and People South of the Equator	Great Northern	
3-20	The Rock Climbers	Eclair	195
3-21	A Trip About Christiania	Powers	
	SPORTS		
3-10	Caribou Hunting	Solax	

DAILY INDEPENDENT RELEASES

MONDAY: American, Eclair, Imp, Yankee.

TUESDAY: Bisan, Pawers, Thanhauser.

WEDNESDAY: Ambrasia, Champian, Nestar, Reliance.

THURSDAY: American, Imp, Itala, Rex.

FRIDAY: Bisan, Lux, Salax, Thanhauser, Yankee.

SATURDAY: Great Narthern, Itala, Powers, Reliance.

THE NICKELODEON

$2.00 Per Year | Published Weekly by ELECTRICITY MAGAZINE CORPORATION, Monadnock Building, Chicago | 10 Cents Per Copy

Vol. V | CHICAGO, MARCH 25, 1911 | No. 12

The Nickelodeon

Published Every Saturday by the

ELECTRICITY MAGAZINE CORPORATION

MONADNOCK BUILDING, CHICAGO

Long Distance Telephone: Harrison 3014

Ed J. Mock and Paul H. Woodruff, Editors James B. Crippen, Associate Editor

New York Office: 1433 Hartford Bldg., 41 Union Square
LAURENCE F. COOK, Eastern Representative
Telephone, Stuyvesant 1672

London Office: 36 Maiden Lane, Covent Garden
S. RENTELL & CO., Representatives

Table of Contents

TERMS OF SUBSCRIPTION

United States, Cuba and Mexico, $2.00 per year; Canada, $2.50 per year; Foreign countries within the Postal Union, $3.00 per year; Single Copy 10 cents.

Distributing Agents: The Western News Company and its International Branches.

NOTICE TO ADVERTISERS

Changes of advertising copy should reach the office of publication not less than five days in advance of date of issue. Regular date of issue, Saturday of each week. New advertisements will be accepted up to within three days of date of issue, but proof of such advertisement can not be shown.

NOTICE TO SUBSCRIBERS

Remittances should be made by check, New York draft or money order, in favor of THE NICKELODEON. Foreign subscriptions may be remitted directly by International Postal Money Order, or sent to our London office The old address should be given as well as the new, and notice should be received two weeks in advance of the desired change.

Scenes from the Selig Feature Films, "Red's Conquest" and "Zulu Land."

THE NICKELODEON
AMERICA'S LEADING JOURNAL OF MOTOGRAPHY

VOL. V CHICAGO, MARCH 25, 1911. No. 12

"Motography"—A New Publication

MOTO- means motion; -GRAPH means written, delineated or pictured; hence MOTOGRAPHY, the art of motion delineation, or motion in illustration. Motography, the art-science of motion pictures, is as distinct a field of endeavor as photography or electrical engineering, or for that matter any of the well recognized branches of human effort. Moreover, it is industrially larger than most of them, and as broad in its applications, in its civilizing influence, as any of them. In short, motography offers a tremendous field for trade paper exploitation.

It is usual to think of motion pictures as primarily a form of entertainment. There is, however, no logical reason for this attitude. It would be as reasonable to regard the ordinary photograph as merely useful for illustrating stories. Indeed, the motion picture is primarily an improvement on the photograph; so that it has for its field of operation not only the whole realm of photography, but also a scope of action far beyond that of the still picture.

Consider for a moment the actual uses of motography. Of greatest numerical importance, of course, is the field of pure entertainment; but that is but one of many applications. These may be roughly and spontaneously classified as follows:

Delineation of new dramatic and comic themes for entertainment.
Reproduction and record of existing dramatic or spectacular performances.
Reproduction in perfect counterfeit of natural scenery.
Reproduction of the larger works of man, ancient or modern.
Record of the habits and actions of different races and types of men.
Record of animal movements and actions.
Illustration of surgical or medical practices.
Illustration of mechanical practices, shop operations, etc.
Demonstration of apparatus in use, for instruction or advertising.
Illustration of sales methods, for instructing salesmen.
Illustration of civic advantages, for the advertising of towns and cities.
Reproduction of scenes in history for instruction or entertainment.
Magnification of time, for the study of very slow movements.
Diminution of time, for the study of very rapid motions.
Micromotography, for the study of movement among infinitesimal creatures.
Telemotography, for the study of distant objects in motion.

And, lest we have overlooked some adaptation of the art, the reproduction, illustration or demonstration of anything whatsoever, whether it involves motion or not.

This, in short, is the field which MOTOGRAPHY, the publication, expects to cover. It is needless to say that we will search the world for material of vital interest to its readers. We have already proven that. Let us rather give a slight idea of the contents of its first number, which issues April 15.

For the entertainment feature we will describe and illustrate a motion picture theater now operating in this country, whose admission price ranges from twenty-five to fifty cents; and whose programme is as high grade as it is possible to make it.

Another feature will be an illustrated article describing a successful system of stereoscopic projection.

The lively and interesting articles on motographic advertising by Watterson R. Rothacker will be continued in each issue of MOTOGRAPHY.

Patents pertaining to the art will be described as they appear, with simplified explanations and illustrations.

A series of articles on dramatic composition by THE NICKELODEON'S dramatic critic will appear.

Absolutely unbiased and technically correct construcutive criticisms will continue to be published.

Synopses of current films will NOT be published in MOTOGRAPHY. These may be obtained by interested parties direct from the manufacturers.

Every truly meritorious film subject will, however, be described in its pages and copiously illustrated; we, however, reserving the right of selection.

Every scientific discovery in the field and every adaptation of motography to scientific investigation will be described and illustrated.

A course of instructions for scenario writers will appear in the new publication.

The use of motography for educational purposes will be featured.

Stories, popular articles and cartoons will liven up the pages; four pages of meaty editorials and a selected half-tone frontispiece will form a fitting introduction to the best publication money and experience can produce.

POSITIVELY THE NICK'S LAST APPEARANCE.

IN this, the last appearance of The Nickelodeon, it is perhaps fitting that we, its publishers, explain more fully the reasons for its discontinuance as a weekly journal, as outlined in our announcement of March 4.

In the *Dramatic Mirror* of March 15 "Spectator" analyses the situation and The Nickelodeon as he sees the combination. We acknowledge gratefully his use of the phrase "excellent Chicago trade paper," even while he deplores our arraignment of the commercial interests at present in control of the field. "Spectator" opines that this feature of the announcement brought it from the sublime to the ridiculous. Doubtless he is right. Personally we are conscious of no sense of tragedy in the passing of The Nickelodeon. The sentiment is rather of relief, and a joke is better than tears any day.

But we would ask "Spectator" to consider the fact that as publishers we are not novices. Not only are we at present publishing other trade papers of unquestionable success, but our experience in the work covers several lines. It is but natural that we should compare this field with others of which we are cognizant. And here comparisons are odorous, in very truth.

We submit to any logical mind that even in an industry split by factional disputes—and this is not the only business so afflicted—the carrying of the advertising of one faction is no good reason for the withdrawal of patronage by the other faction. Several papers cater to this field, yet The Nickelodeon is the only one carrying both licensed and independent advertising. And this brings us back to "Spectator."

The *Dramatic Mirror* is, of course, not a trade paper. It is a play paper. On those grounds alone we must excuse "Spectator's" argument that there is no place here for the trade paper—that the exhibitor is interested only in the photoplay and its players. For that must always be the *Mirror's* selling argument, just as the opposite is the selling argument of the true trade paper. But this is a matter of facts, not arguments.

Motography is fundamentally technical. There is no difference, as far as the exhibition is concerned, between "The Tale of Two Cities," "The Fly Pest" and "Shooting Caribou in New Brunswick." All depend upon an electric arc, an arrangement of optical lenses and an ingenious combination of mechanical movements. The *Mirror* itself enjoys the patronage of those who made possible the Motion Picture Patents Company, an organization built upon purely technical bases. The Nickelodeon lists every week a constantly increasing number of new patents pertaining directly to the industry. The satisfactory projection of photoplays is made possible only through an expert technical knowledge which is still remarkably rare. And yet, says "Spectator," why the trade paper?

The Nickelodeon is discontinued because in this field a paper is not judged for its advertising value by the usual standards. The fact that The Nickelodeon has built up a splendid *paid* circulation, that it has the approval of exhibitors, and that its readers regard it so highly that they keep every copy where most weeklies are discarded after one reading, all count for little in the eyes of the commercial interests. They measure their journals by the standards of thirty years ago. Free circulation, the house organ, the subsidized press, the truckling trade writer, all abandoned or at least suppressed long ago in other fields, here find a welcome and speedily pervert the advertising appropriations to their own ends, leaving the legitimate journal unsupported. The Nickelodeon is too expensively conducted to thrive on its subscription price alone.

As to technical trade papers, *Motography*, The Nickelodeon's successor, will be more technical than The Nickelodeon ever was. We have the fullest confidence, and indeed have the assurance of a large number of The Nickelodeon's friends, that *Motography* will be a success from the outset.

THE VALUE OF STARS.

BY "star" we mean the theatrical, not the astronomical variety. A star is an actor of ability, who is also popular, that is, widely known and widely liked. And when we speak of his value, we mean his value to the particular film-maker in whose constellation he shines. Stars are of value to their owners; they constitute one of the most valuable assets in the film-maker's treasury.

The reason is not far to seek. Since the essence of starhood is popularity, it follows that the star confers his popularity upon any film in which he appears. He draws patronage. And that is what, above all, the film-maker wants. It is doubtful if the film-maker has any other resource so potent to attract the public. Of course, it must be allowed that the maker's most valuable asset is his own good name, built up by months and years of conscientious endeavor; but the "maker's name" is only a convenient omnibus term expressing the various elements which have combined to give the maker his prestige, and among these elements we unhesitatingly accord the possession of stars the leading place. In several instances the acquirement of a star has conferred a popularity upon a make of films such as it never enjoyed before. The motion picture world has witnessed this procedure too often to leave any room for doubt as to the value of stars.

AERIAL MOTOGRAPHY.

In France the latest development in motography has been the exhibition of pictures taken from aeroplanes in flight. This procedure may also be said to mark a development in airmanship.

A Popular Southern Theater

By G. D. Crain

LOOKING northward from the northeast corner of Fourth avenue and Chestnut street in Louisville, Ky., where Uncle Sam's big stone postoffice building stands, one sees the plot of ground that is known as Government Park. To and fro before the frontage of the park there moves a surging throng of people on Fourth avenue, day in and day out, night in and night out. Each unit in the multitude of promenaders, shoppers and all sorts and conditions of men feels an impelling attraction as he passes Government Park, and directly across Fourth avenue he sees the cynosure of attention, the Majestic Theater.

If it is daytime the Majestic stands out spotlessly clean and beautifully ornamented among an array of sooty buildings that have withstood the test of decades in Louisville's retail shopping section. If the time is night, a flood of light issues from the exterior of the theater, changing night into day along that part of Fourth avenue and providing brilliant illumination that attracts the crowds like moths to a candle.

Primarily, it is the distinct advantageousness of location that has made the Majestic moving picture theater the success that it is. A wise advertiser who wished to test the efficacy of an electric sign stationed directly across the street from the theater took the pains and time to count, through four mediums, the exact number of persons that passed that point on foot between the hours of five and nine in the evening on an ordinary week-day; this common sense modus operandi quickly determining that, within the given four hours' time, 28,728 persons walked past the electric sign, viewing the ad, and this fact demonstrated that tens of thousands of people pass the Majestic every day, to view its attractions from the exterior and then to become moving picture "fans" by entering and seeing the exhibition.

Exterior of the Majestic Theater.

The Majestic is owned by the Royal Theater Company, which is composed of several of the foremost business men of Louisville. The following men are officers of the Royal concern: George G. Fetter, president of the George G. Fetter Printing Company, president; Charles H. Bowner, president of the German Security Bank, vice-president; A. P. Barnard, president of the Louisville Tabacco Warehouse Company, treasurer and general manager; L. J. Dittmar, president of the Kentucky Anti-Tuberculosis Association, secretary and house manager.

A hasty view of the exterior of the Majestic at once impresses the observer with its regal dignity, for the entrance arch of the house towers for forty feet above the sidewalk, spanning forty feet across. The theater is 170 feet deep. The lobby of the Majestic is canopied by a ceiling treated to represent the sky and is finished in marble and mosaic. A lofty arch surmounts two front entrances, the proscenium being brilliantly ornamented with 140 eight-watt tungstens and two flaming arcs of about 10,000-candle power. The entrance to the theater is finished in soft pastel shades, of green, yellow and pink, extensively ornamented with stucco-work.

A flaming electric arrow points downward from the apex of the entrance arch to a double sign that spells in two-foot letters, "Majestic." On the ground floor of the lobby two big brass picture frames repose upon easels. These are filled from time to time with enlarged views of film scenes or of some famous motion picture delineator, as are also the four square bulletin boards that surface the walls of the lobby.

Upon paying entrance fee, ten cents for adults, five cents for children, the ever-moving audiences of the Majestic occupy an entirely fire-proofed building that is modeled in every detail to suit their needs and comfort. Concrete and brick construction prevails throughout the big structure, which contains engine room and operating room for picture machines in the rear of the building, behind the screen and separated from the audience by a brick firewall.

The interior of the Majestic presents a steep slope, for there is a five-foot drop from front to back of the 170-foot length. Seven hundred and fifty chairs are spaced in straight rows, cut by three parallel aisles and one diagonally across the width of the theater. The floors are covered with a tough cork carpet, the resiliency of which effectually deadens all noise of entrance or exit. A row of shaded forty-watt tungstens rims the walls in the Majestic and 50 forty-watt bulbs are disposed in the ceiling for general illumination. With the lights flashed on, the interior presents a beautiful sight, with its harmonious color scheme of cream and green which is altered every month or so to insure variety as well as to provide a neat and freshly painted interior.

In the rear of the Majestic auditorium there is a big operating room, 10 by 12 feet, constructed of brick and concrete and equipped with two Power's machines and one McIntosh stereopticon, all with 36-foot throws. Three expert operators are employed at the Majestic, this unusual number helping to swell the Fourth avenue play-house's staff to an extraor-

dinary size. Fourteen persons are employed, including one woman cashier, five musicians, two ushers, a man and a woman singer and several others of less importance.

Steam heat provides a comfortable interior for the playhouse at all times during the winter, while admirable ventilation facilities have been provided in the shape of a 36-inch exhaust fan and five 30-inch ceiling vents.

Each show at the Majestic consists of three reels of Licensed films and one illustrated song. One of the strong points of the Royal firm's house is the excellence of the music provided. The four-piece orchestra discourses from 1:30 o'clock in the afternoon, the theater opening for exhibitions at 10 a. m., until 11 o'clock at night. Not only popular airs and illustrated songs are played, but also a repertoire of classics and light operatic selections may be heard at the Majestic.

Manager Dittmar states that the recognized excellence of the Majestic's musical programs is one of the main advertising features of the theater, for competition is so strong in the down-town district of Louisville that it behooves motion picture house managers to make special play upon some feature of their exhibitions.

The Louisville *Herald,* a metropolitan local newspaper, recently conducted a novel advertising contest, wherein a number of well-known products and establishments were exploited without giving the name and address of the advertiser. The missing names and addresses were to be delved for by the public, the *Herald* offering substantial cash prizes for correct solutions. One of the ads read, "What moving picture show is located near the postoffice and is noted for its run of high-class, clean pictures? Why is this house becoming more and more popular?"

The answer to this conundrum was naturally the Majestic Theater and, in epitomizing the Majestic's virtues, one *Herald* ad contestant said: "It is becoming more and more popular every day because every time one visits it he is sure to go back again and to tell his friends about the convenience and comforts it offers to the tired mind and weary body of the shopper."

A Motion Picture Show Magnate

Moving pictures are slow compared with the rapidity that has marked the rise in this field of Marcus Loew. Six years ago this man opened a "penny arcade" in Fourteenth street; today he holds a controlling interest in 150 moving picture and vaudeville theaters, nineteen of which are located in Greater New York. His name is at the head of twenty companies, one of which is incorporated for $1,500,000, the other nineteen for amounts ranging from $50,000 to $500,000 each.

"I was in the fur business when I became interested in the penny arcade in Fourteenth street," said Mr. Loew, who isn't nearly so big as the facts that go to make him interesting. He is evidently a man of nerve, but not nerves, with a smile that follows the curves of his mustache and a manner that is mild.

"David Warfield went in with me, and he is still largely interested," continued the Little Father of the Moving Picture. "Some of my friends thought me insane at the time, and I must confess that there were moments when I was inclined to share their view. I put in $20,000 and Warfield did the same. The Fourteenth street place did such a promising business that we formed a new company capitalized at $150,000 and opened five other penny arcades, four here and one in Cincinnati. These got along finely for a few months, and then they all took a decided turn for the worse. In fact, we lost all our money and as much more as I could raise.

"Three years ago I would have given up if it hadn't been for a last lingering hope of being able to pull out the men who had gone in with me. Luck finally changed six months later, when I opened my first moving picture show in a room over my last remaining penny arcade in Cincinnati. It was a room about twenty-eight feet square, with no seats. The one and only price of admission was five cents. To my utter amazement 4,993 people crowded into that room on the first day.

"That was the beginning of the moving picture business. In six months we had forty other places going, all store shows, and all doing a land-office business. Three years ago I started selling these and getting hold of theaters, believing that the public would justify this move. It did—but I'll never forget the opening day of my first theater as a moving picture house. I had secured a theater in Brooklyn formerly run as a burlesque house. To give it a new standing I engaged an Italian tragedian, Antonio Miori, and kept him there for six months in Shakespearian plays. Then I entered upon my original plan and changed it into a moving picture and vaudeville theater.

"The price of admission was 10 cents, and on the first day I took in exactly 10 cents. I was so ashamed that I gave the audience his dime back, telling him that it was only a dress rehearsal, not a regular performance. It was an awfully wet day, and the man probably had come in to get out of the rain.

"But he liked the show and said he would tell his friends about it. He proved to be a wonderful press agent, and though he didn't exactly save the rainy day he sent around so many people on the following one that receipts jumped to $14. The first year I made a clear profit of $63,000.

"It was undoubtedly the combination of moving pictures and vaudeville that did the trick. At first the daily cost of a show was about $80; now it runs as high as $1,800. In six years I have changed my methods five times. Now the general range of prices is from 10 to 50 cents. People have shown a willingness to pay better prices for better vaudeville, and the character of audiences has steadily improved.

"Will prices continue to go up? Yes, I think so. Public taste will settle this question. A new class of theater-goers has sprung up and it is an interesting fact that 90 per cent of the patrons of the Lincoln Square Theater, for example, come from the silk-stocking district.

"And all this means, to my mind, that the popular priced moving picture and vaudeville business is still in its infancy."—New York *World.*

Urges Films for Schools

"The only effective way to fight the moving picture evil in Indianapolis is to place motion pictures in the public schools," said Mrs. Grace Julian Clarke, president of the Indiana State Federation of Women's Clubs, at a meeting of the Woman's School League. "I hope to see the time when geography is taught by the moving picture."

New Amusement Patents

By David S. Hulfish

It will be the purpose of this department to list all United States patents, as they are issued, which pertain to any form of amusement business, giving such data in each case as will enable the reader to judge whether he wishes to see the complete darwings and specifications of th patent. When patents of special interest to The Nickelodeon readers are encountered, the descriptive matter herein will be amplified accordingly. A complete copy of drawings, specifications and claims of any patent listed will be furnished from this office upon receipt of ten cents.

No. 972,344. Motion Picture Toy. Ernest W. Davis, Chicago, Ill., assignor to Egbert R. Dull, of same place.

The zoetrope, with its row of pictures and its row of slits, all in a pill-box construction, was among the first devices to show motion by means of successive pictures through the aid of persistence of vision. Mr. Davis has invented and patented a folding zoetrope. Describing the illustrations, the patent says:

Figure 1 is a perspective view of the complete toy as it appears in operation; and Fig. 2 a view of the toy flattened out foı convenience in transportation.

1 is a band of sheet material, on which is printed a series of pictures 2, which represent the successive attitudes of a figure in motion. The band is provided with a number of slits 3 and is further provided with means for securing together the

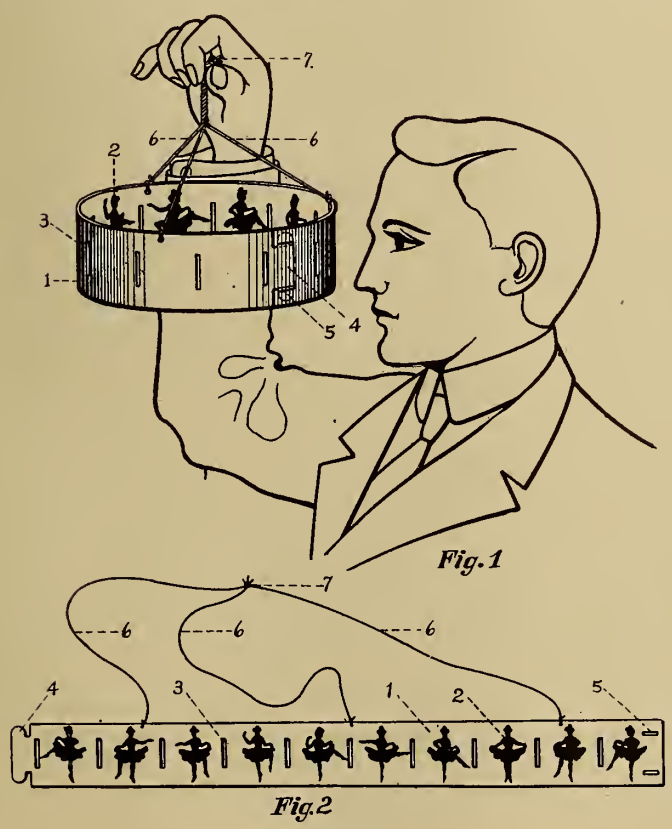

972,344.

ends of said band 1 to form a cylinder open at both ends. The ends of the band 1 may be secured together by means of a double tongue 4, at one end of the band and two slots 5 at the other end. When the tongue 4 is inserted in the slots 5, the band 1 is then formed into a cylinder, as illustrated in the perspective view, Fig. 1. Or, the ends of the band 1 may be gummed for the same purpose. In order to support and rotate the cylindrical band thus formed, a number of threads or cords 6 are secured to the band, near its upper edge, the free ends of the cords 6 being tied in a knot 7. When the knot 7 is held between the thumb and finger and the band 1 is suspended by the cords 6, the band 1 is free to rotate in an approximately constant plane of rotation. If now the knot 7 is rolled between the thumb and finger, the cords 6 will be twisted upon each other and the action of gravity and the twisted cords will cause rotation of the band 1.

The slits 3 in the band 1 are so spaced that upon rotation of said band, the vision through each slit shows the pictures 2 in a position slightly advanced in relation to the position seen through the preceding slit. The progressive stages of movement thus seen in rapid succession, gives the effect of moving pictures, as will be readily understood.

No. 973,896. Ticket Vending Machine. William F. Trippensee, Detroit, Michigan. The machine is loaded with a roll of tickets and is driven by an electric motor. Upon dropping into the receiving slot a coin of proper denomination, the mechanism revolves, cuts off a ticket from the roll, and delivers it into a tray before the patron.

No. 973,003. Advertising Device. James P. Coughlin, Chicago, Ill. An automatic slide changer for changing the slides automatically in stereopticon

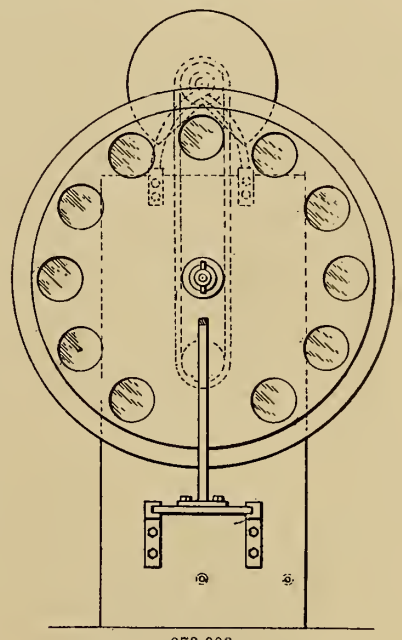

973,003.

window exhibitors. The lens system is provided with a shutter for closing the lens while changing the view. The general arrangement of parts is shown in the illustration accompanying.

No. 973,917. Motor Attachment for Motion Heads. James Chamblers, Evansville, Ind.

This invention has unique points of advantage, and the device may find a market despite the fact that many of our cities, particularly the larger ones, prohibit the use of a motor for driving the motion head.

Of the object and nature of the invention, the inventor says:

This invention relates to improvements in motor attachments for motion picture exhibitors of that type which includes

a sliding or shiftable frame supporting the film carrying mechanism and provided in order to insure the proper "framing" or alignment of the film sections with the projection aperture under all conditions of operation. Exhibitors of the type referred to have usually been operated by hand.

The present invention proposes a motor driving attachment which is constructed in a novel manner and with special regard to the movement of the sliding or shiftable frame

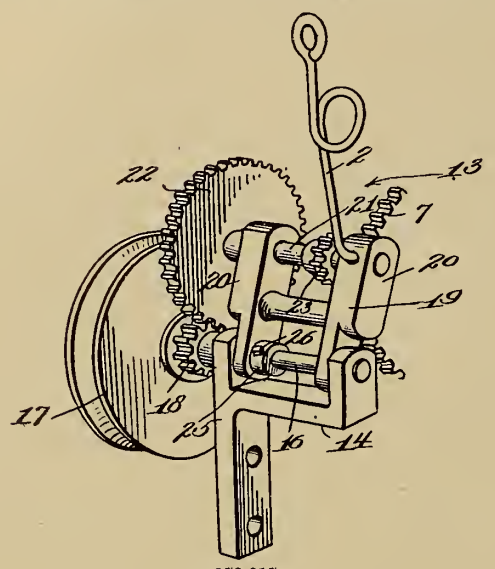

973,917.

whereby the relation of the driving parts is automatically maintained irrespective of the position of the frame and of course without interrupting or otherwise affecting the operation of the apparatus.

The illustration accompanying shows the attachment only. The gear *7* is the gear upon the main drive shaft of the motion head; *17* is the pulley for the motor belt. The gear *7* is preferably upon the pinwheel shaft of the Geneva movement and therefore upon the framing carriage. The idler shaft *21* carrying the gear *22* and *23* and therefore serving also as a change gear shaft, is carrier by the frame *20* pressed by the spring *2* in such manner that the gear *7* is meshed to the gear *18* through the gears *22* and *23*, regardless of the position of the framing carriage and the vertical position of the gear *7*.

No. 972,877. Electric Sign Letter. Frederick Hurst, Lansdell, Atlanta, Ga. The object is to provide an attractive sign letter for electric signs, and one

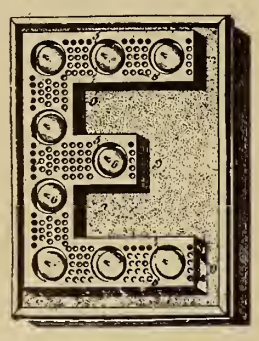

972,877.

which will present a neat and approximately accurate letter from even when viewed from an angle. Following is the first claim of the patent, which, in connection with the illustration, describes the improved sign letter:

1. A sign character comprising a support, a hollow character mounted thereon and having its face provided with opening and closely arranged apertures between adjacent openings, and lamps secured in the character with portions protruding out of the openings, said openings being larger in diameter than the protruding portions of the lamps to leave annular spaces around the lamps.

Newspaper Admits Good in Films

As evincing a change that is taking place in the attitude of the large metropolitan journals toward the motion picture theater, we reprint the following from the New York *Globe*.

"Showing a development that has been steady and sure, and along right lines, the moving picture industry is now acknowledged generally to be of great educational value to any community. It is the leading form of entertainment for the masses, and it ministers to the moral as well as to the mental well-being of its army of followers.

"Nearly a quarter of a million persons are regular patrons of the moving picture theaters in this city alone. They are kept in touch with all the spectacular events of contemporaneous history—for the moving picture 'camera men' go to the ends of the earth for their 'news'—and they are taught the lessons of right living by the hundreds of films that depict various scenes of home life and other everyday happenings dealing with various phases of human nature. And with the serious is mixed the gay and the amusing is such an interesting solution that moving pictures are placed on a popular standard that cannot be approached by any other form of amusement.

"The regular moving picture patrons are in a class by themselves, and get as much satisfaction from their entertainment as do those who attend only performances in theaters whose prices are beyond the reach of the poor. Although the moving picture industry caters to a great extent to classes who are not overburdened with this world's goods, it is not in any sense of the word a cheap affair, except in the price of admission charged.

"It is very interesting to note the interest the regulars have in the performance who act in the 'specialties' furnished by the moving picture people. Every moving picture company has its regular staff of performance, and they become very popular with the theatergoers. It is not unusual for one of these companies to receive letters from theater managers stating that so-and-so has made a hit with his patrons, and asking for films in which this star of light and shadow has the principal role.

"All the performers are well paid, and most of them are really high-priced artists. Anybody who has seen some of the more startling and picturesque series of pictures can readily realize that it takes great skill to act some of the parts realistically."

Soldiers to Have Motion Pictures

No longer will the soldiers at Fort Riley, Kansas, be compelled to seek amusement and diversion outside the post. The new artillery exchange, just completed, will provide sufficient entertainment. The cavalry post has for many years had an exchange, which the artillerymen have made use of, but the new exchange now contains all the modern amusements. Bowling, billiards, pool and gymnasium rooms are provided. In addition, on three nights of every week, a moving picture show is given in the large hall.

Human Interest in Advertising Pictures

By Watterson R. Rothacker*

"INFUSING Human Interest into Ad-Pictures" was the subject taken by Charles Freeman for his article which appeared in the March issue of *Judicious Advertising*. It is interesting to note what Mr. Freeman had to say in this regard inasmuch as his expressions indirectly endorse moving pictures as the superior means of illustration.

Mr. Freeman is a commercial artist of twenty years experience and is branded by the editor of *Judicious Advertising* as "one of the first authorities in the country on the power which can be injected into advertising illustrations by the artist." Furthermore the editor states that constructing illustrations for thousands of business houses must give weight to Mr. Freeman's statements, and that in the article we have taken the liberty of referring to, twenty years of specializing on this line of work are crystalized.

We quote here Mr. Freeman's words, recognizing the truth of his assertions but calling attention to the fact that moving pictures allow greater opportunity to infuse human interest into illustrations than the best of inanimate drawings or photographs.

"The value of any advertising illustration depends upon two things, its attention value and the 'human interest,' that it portrays. A finely executed drawing may often lack both these qualities, and therefore becomes almost worthless to the advertisement it was supposed to strengthen.

"The limitations that attend the reproducing and printing of illustrations make it necessary for the artist always to be working for new and striking effects in treatment and composition.

"Whenever something a little different from the ordinary does appear in the way of effective treatment it is good, because it is new, it has attention value, but as a rule this value is of short duration, for it is bound to be imitated at once by every advertiser in the country, who is up against it for new ideas.

"The illustration, if it requires figures and must be something more than a cyclone or technic, must contain 'human interest,' and according to the amount of human interest expressed in a picture it is good or bad. It must be truthful. The people must be real people performing real, possible, human acts.

"Photography is used almost exclusively by some advertisers, because it gives to the public the impression of its being something real.

"Most people believe that photography cannot lie; if they see a real photograph of a woman, for instance, pouring coffee from a percolator, they at once believe that coffee can really be poured from a percolator, but some of us know that a photograph, under the hands of a skillful retoucher, can be made realistic, for instance:

"An engine standing still in a photograph can be made to look as though it were running sixty miles an hour.

"Automobiles, although when the picture was taken were standing perfectly still, are shown with a burst of speed which carries them through the very borders of advertisements.

"All this is done in the effort to arouse the interest of the buying public, and this action, to arouse interest, is what the artist must be able to add to the otherwise dead photograph, or to put into his drawings.

"Illustration in advertising has been put to the test, and has proven its right to exist.

"True, most people can read, but a good picture that really has selling power helps them to understand.

"A story not illustrated may be extremely interesting, but it is human nature to look for illustrations first, and if the hero and heroine meet with our approval, we are always willing that they should live happily ever after."

Mr. Freeman's words, as indicated by the quotation marks, we have used, for what he has said in regard to illustrated advertising copy is decidedly in favor of moving pictures—for instance:

Referring to an ad-picture he states, "It must be truthful. The people must be real people, performing real, possible, human acts." Moving pictures accurately reproduce with life-like precision the real, possible, human acts of the real people used in the subject.

Mr. Freeman also tells us than "An engine standing still in a photograph can be made to look as though it were running sixty miles an hour" and that "Automobiles, although when the picture was taken were standing perfectly still, are shown with a burst of speed which carries them through the very borders of advertisements." Acknowledging that the cratty commercial artist can do this, *moving pictures exert a more marvelous magic, for they actually show the train going at the high rate of speed which the "still" picture attempts to suggest,* and they show with absolute realism one automobile, or a number of automobiles, dashing across the screen with all the thrilling movement which characterizes an exciting auto race or demonstration.

We are told by Mr. Freeman that this infusing human interest into ad-pictures and conveying the idea of motion is done in "the effort to arouse the interest of the buying public, and that action, to arouse interest is what the artist must be able to add to the otherwise dead photograph, or put into his drawings." This statement certainly brands Mr. Freeman as an advocate of moving pictures, and the inference that *a photograph is "dead" unless it suggests action,* boldly champions the cause of an illustrative force which throbs with all the realism of life itself.

The opinions of such reputable men as Mr. Freeman, emanating as they do from the fountain of experience, are worthy of notice, and as long as illustrations are a factor in advertising too much consideration cannot be given to *the extraordinary power of animated photography to reproduce the human interest of real life.*

Moving pictures embellish the advertising field—they attract the patrons of advertisements—and they will before long astonish the advertising man or advertiser who is slow to take them from the amusement category and utilize their wonderful power.

*General Manager Industrial Moving Picture Company, Chicago.

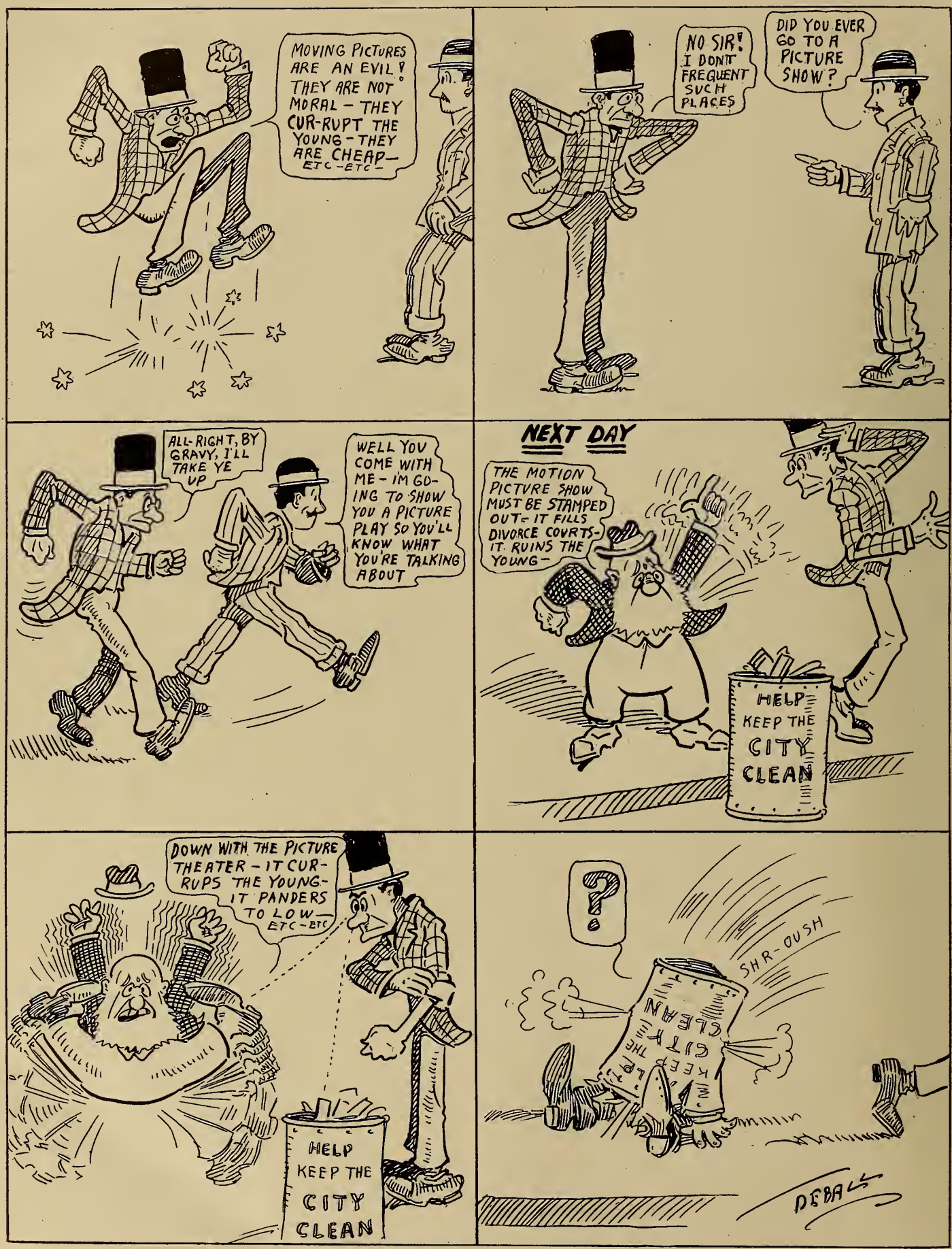

UNCLE DUDLEY CHANGES HIS MIND ABOUT PHOTOPLAYS.

History of Slide Making in America

By C. K. Larson

ALL know what lantern slides are, but if we think of them as something which is going out of fashion it is because we are not up to the times. In Philadelphia, which has always been a center for their manufacture, they are being made in increasing numbers every year.

From Athanasius Kircher, in 1643, who may truly be called the real inventor of the magic lantern, until the development of the ambrotype by Niepce in 1853, all lantern slides were painted on glass. But as the necromancer and the showman, rather than the artist, were the first to use the magic lantern, it is not surprising that their taste ran to ghosts and comic themes rather than to the more refined subjects of today. It may be concluded that these older lantern slides were not uniformly of high artistic value, since they have so generally disappeared.

The old house of McAllisters, opticians, established in 1783 on Chestnut street in Philadelphia, were the original leading American dealers in lantern slides. Their successor, Charles T. Milligan, is one of the oldest men in the business in America.

Lantern slides at first were all imported from England until gradually native talent attempted the art of painting them. Among the first who did this in America was Dr. Daniel H. Briggs, who established a business now conducted by his son.

Dr. Briggs was a young New England homeopathic physician, living in Abington, Mass., not far from historic Plymouth. He had a love for nature and science, and, like many another young physician, an unpleasantly small practice. To occupy his too abundant leisure and add to his income he prepared a lecture on geology to deliver to the townspeople. He bought a magic lantern, but, having seen some of the imported lantern slides, thought he could paint his own, since he had been given to painting flowers in water color and had acquired some skill. He painted his slides successfully, and after using them sold them to someone who wished to buy them. Other requests for lantern slides began to come to him and he found himself gradually drifting into the painting of slides.

All this was prior to the development of photography. In 1853 Niepce, improving upon Daguerre, invented the ambrotype, an unexposed negative on glass, blackened on the back. Dr. Briggs conceived the idea of saving the labor involved in painting lantern slides by adapting the ambrotype to their making. Acocrdingly he went to Boston, where he associated himself with the leading photographer, Whipple. Here he learned the mysteries of the new art.

In 1855 he moved to Norton, Mass., gave up the medical profession and devoted himself entirely to the more profitable business of making photographic lantern slides. The process he used was the collodion or wet-plate method.

Philadelphia, however, was the center of the lantern slide business of America, as it is today—and it always has been. Upon the invitation of dealers who liked his work, Dr. Briggs removed to Philadelphia in 1872. In 1875 he bought out the business of Frederick and William Laugenheim.

The Laugenheims were pioneers in photography and lantern slide making. Upon the invention of the ambrotype, like Dr. Briggs, they had set about applying it to lantern slide making. Both the Laugenheims and Dr. Briggs began at the same time, entirely independent and with no knowledge that anyone else was at work upon their common task.

John C. Browne, of Philadelphia, one of the oldest amateur photographers in America, having practiced the art from its beginning long before the days of cameras for amateurs, has still lantern slides and other photographic slides of the Laugenheims, which show the excellence of their work. The process used by them was the albumen or dry plate method. Both the Laugenheims and Dr. Briggs improved upon the old lantern slides, which consisted of a single piece of glass, by sealing with Canada balsam a glass cover over the glass positive. Dr. Briggs died in 1898. His son still continues the original collodion or wet-plate process, which is well adapted to the class of subjects he handles.

About sixteen years ago Dr. Keller concluded that the educational value of lantern slides had not been fully appreciated in the teaching of chemistry. He acordingly began making a collection of slides, which by this time is perhaps one of the largest and most unique in America. Besides pictures of the great chemists of the world, chosen for their artistic value and correctness, their homes, their laboratories—with them at work in them sometimes—he has sets of slides which picture chemical experiments to the eye. There are generally two of these. One exhibits everything in readiness for the experiment. The other shows the results of the experiment. Dr. Keller finds these slides very effective for review purposes. By this means each chemical experiment which has previously been made before the class can be recalled to the eye and to memory without actually repeating it. This renders possible a rapid review of very many more experiments than could possibly be made in a lecture hour. Not only does it economize time, but it saves also the cost of the materials for the actual experiment.

Besides chemical lantern slides Dr. Keller has slides of minerals made by the wonderful Lumiere process, which reproduces all the colors of nature. "The best of my slides," says Dr. Keller, "were made for me by Rau."

Another big maker of lantern slides is William H. Rau of Philadelphia. Mr. Rau recently was awarded the title of "Officier d'Academie" by the French government. He was the official photographer of the World's Fair at St. Louis and is the official photographer of the Pennsylvania Railroad. Besides railroad and landscape photography, Mr. Rau specializes in architectural photography, portraits of men and lantern slides.

Mr. Rau, who was born of German and Swiss parents, has himself seen a great many of the views from foreign lands included in his large collection of lantern slides. In 1874 he was on the United States man-of-war Swatari in the transit of Venus expedition. In 1881, while associated with Edward L. Wil-

son, photographer and publisher, he traveled in Egypt, went up the Nile, crossed the Desert of Arabia and traveled through Palestine. Subsequently he sent a photographer through these same lands to get views for him. Another man he sent to Italy, but, beautiful as were the views of Italian scenery secured, the taste of the public has thus far failed to make that particular venture profitable.

Mr. Rau has some strong opinions on our lovely tariff law, which puts a tax of 25 per cent on unexposed photographic plates, but exacts 60 per cent on exposed plates, as "manufactured glass," even if the negative is not developed. Perhaps this protective tariff on foreign scenery, if made even higher, might result in the production of American scenery so superior as to drive the foreign article out of the market.

Among the most recent of Mr. Rau's lantern slides are the Passion Play pictures for 1910 and a series on the Cathedrals of England.

The moving picture at first seemed to threaten the continued use of the magic lantern and the lantern slide. Mr. Harbach, of Harbach & Co., whose business is still largely with the entertainment phase of the magic lantern and lantern slide, said that a customer wrote to him shortly after the moving picture appeared: "Sell your lanterns and your Passion Play slides as quick as you can. There'll be no use for them now." Three months' time showed the prediction to be false. "As long as children are born," said Mr. Harbach, "and Christ is taught there'll be a use for lanterns and such pictures." Other dealers report that the moving pictures for a time made serious inroads in their business, but this loss has not been permanent. On the contrary the moving picture houses have actually increased the demand for lantern slides. They are used to illustrate popular songs, in which many slides are used.

It is, however, in the field of education that the lantern and slide have had their greatest development. Every well-equipped college and institution of learning throughout the country is provided with them. Besides illustrating the manners, customs, industries, architecture, arts, science of all peoples, past and present, the scenery of the world, literature, religion, especially the Bible, Palestine and the life of Christ, and nature studies, lantern slides are made on most unexpected subjects. The chemical lantern slides of Dr. Keller are an instance in point. Another is a set of two hundred slides in psychology by no less eminent an authority than Prof. E. W. Scripture, of Yale University. Charles R. Pancoast, of the city, has made a set of slides illustrating diseases of the heart. William H. Rau has a series of pathological and histology slides made by means of a photomicrographic apparatus devised by Prof. Harvey R. Gayland, of Buffalo, who operated on President McKinley to remove the assassin's bullet.

Exhibitors Take Heed!

Mere man came into his own in a Cincinnati police court recently, when Calhoun Columbus, assistant manager of The Alahambra, a motion picture theater, was fined $5 and costs by Judge Bode on the charge of failing to cause a woman patron to remove her hat, which obstructed the view of several other patrons. The arrest was made on complaint of Nicholas Klein. Columbus admitted that he had not heeded the request of Klein.

How Pictures Are Taken

Of all persons who have visited the Russian Empire in an effort to take moving pictures, and even the little camera snapshots, perhaps Fred Niblo was the most successful in taking moving pictures which surely would have been confiscated by the government had it known he had them. But Niblo has them and their value may be judged by the fact that they are stowed away inside a steel vault where no one but he can get at them.

"It is hard to get a permit to take moving pictures in Russia," Mr. Niblo says. "Becoming desperate one day, I went out with my men right into St. Petersburg, and took moving pictures of the herd of vagabonds before they are sent to prison. I have them lying right on the hard pavement in the very streets. That's how they are herded, and moving pictures in Russia are not posed for.

"For a long time I endeavored, through influence and by divers means, to get a permit to take pictures inside the Kremlin in Moscow, but I got no permit. The officials will not allow a camera inside the holy walls.

"After being there several weeks at an expense of $20 a day, I saw a monster parade forming and passing into the Kremlin. The walls of the Russian holy city of the Czars are seventy-two feet high. At the gates are great turrets, palaces in which the dukes and others live. They can drive from one turret to another on the walls.

"I learned that two regiments were going to be transferred to Odessa. It was Assumption Day and the ceremony of blessing the colors was to be performed. The Metropolitan, the holy ruler of the city, and fifty high priests were there in their snow-white robes. I told my men to come on and follow the parade, that I was going to take a chance of getting in jail—entering the Kremlin with a camera. On the streets the people watched me curiously, but the officials were too greatly interested in their parts in looking handsome in the great parade. When we got to the great holy gate, where no man enters without taking off his hat and going through a certain ceremony, in we went after the parade. Right up within thirty feet of the platform the machine was placed and I got pictures of a ceremony which never before had been taken.

"Several times we were interrupted by soldiers who came with a warning hand uplifted. My interpreter, acting on my hasty instructions, waved them away with, 'Look out here, you are interfering with the picture. We have a permit which we will show later. Please do not get in the way.'

"A little gold judiciously distributed sent the inquisitive soldiers about their business and many of them show in the picture with their warning hands uplifted. I purposely turned the machine their way to show them."

"And how did you ever get out with the pictures?" Mr. Niblo was asked.

"Luck, pure luck, I suppose," he replied. "I left the Kremlin that day without any interference, and when I crossed the border it was 5 a. m. I presume the Russian censor there was asleep, for I never heard from him. The German authorities made no effort to intercept me or my films."

Praise for The Nickelodeon

Sac City, Iowa.

Editor, Nickelodeon:—Yours of December 13 at hand. Enclosed find $1.00 for extending my subscription as per your letter and your book. We have looked over your paper and find it just what we require in our business.—Abner E. Engle.

Williston, N. D.

Editor, Nickelodeon:—Happening to run across a copy of your magazine, I find that it appeals to me very much as being just the thing for managers of moving picture houses and small theaters.—George H. Harvey.

Renovo, Penn.

Editor, Nickelodeon:—Enclosed find check for $3.75 for year's subscription to The Nickelodeon for 1911 and "Science of Development," as advertised in The Nickelodeon.

The Nickelodeon reviewer of films certainly knows his business. His criticisms of films are the best of any and I read them all. Such criticisms are the kind that go for the uplift and perfection of the picture. Manufacturers as well as exhibitors will profit by such criticism. He seems to understand that faultfinding is not criticism. Some of the self styled critics are merely knockers or boosters.—Schreck and McFadden.

Honolulu, T. H.

Editor, The Nickelodeon:—A friend of mine, brother operator, has just sent me a copy of The Nickelodeon, and I am so delighted with it that I want you to send me all the back numbers you can possibly secure, for which I have inclosed sufficient to cover.—Richard Thompson.

New York, N. Y.

Editor, The Nickelodeon:—In the first place we want to subscribe for your paper. Kindly send it to us for one year. We have very carefully examined the copy you sent us and find plenty of information in it.—Maxwell Silver, for F. A. Mills.

London, Eng.

Editor, The Nickelodeon:—We are greatly obliged to you for your notice of our cinematograph apparatus, in the November issue of The Nickelodeon. Every mail brings us inquiries from the U. S. A. and as soon as we can arrange for a representative in your country we shall strongly recommend you as the best medium for an advertisement. We enclose our subscription for one year.—A. J. Williamson, Williamson & Dressler Co., Ltd.

Rockford, Ill.

Editor, Nickelodeon:—I have been a regular reader of your excellent journal for several months and found it par excellence.—S. Anderson.

Seymour, Tex.

Editor The Nickelodeon: Your letter to hand. I had forgotten when my subscription ran out. But say, for goodness sake don't stop the book. I will send money for another year in a few days. I can't do without The Nickelodeon. It has got the news in it that every manager ought to want to read.—A. J. Cooper.

St. Bernard, Ohio.

The Nickelodeon:—Inclosed find $2.00 for one year's subscription to The Nickelodeon with book ("Motion Picture—Its Making and Its Theater"), to the following address: Chas. Van Den Eyndar, St. Bernard, Ohio.

I have been receiving another publication for moving pictures but between the two I come to the conclusion yours is the best, especially when it comes down to news and information in general. Too much knocking in the other paper.

If you need any news from this part of the country and vicinity I am at your service.—Charles Van Den Eyndar.

Rochester, N. Y.

Editor, Nickelodeon:—I have a copy of your excellent paper for January and I mean to become a regular subscriber. Before booking with you, however, I will say that I am of the opinion that you can get *every* showman in this territory to subscribe to it.—J. P. Collins, Prop.

Grand Rapids, Mich.

Editor, Nickelodeon:—Enclosed find check for $2.00 for a subscription for one year. You certainly deserve credit for the manner in which you are handling the film question and I predict a grand success for The Nickelodeon, as an organ of this kind was very badly needed by the trade in general.—Vaudette Film Exchange.

Lansing, Mich.

The Nickelodeon:—Received your sample copy of The Nickelodeon to-day and wish to thank you for the same.

It is certainly a dandy and we will add our name to your subscription list.

Your paper covers all subjects that proprietors and managers of five-cent theaters are interested in and should not go unrewarded.

Wishing you success.—Wall and Brown.

Springfield, Mass.

Editor, Nickelodeon:—Enclosed please find check for two dollars ($2.00) for one year's subscription to The Nickelodeon, with book "The Motion Picture—Its Making and Its Theater."

I may say that I am sending subscription not because of your recent letter suggesting it, but because even the cursory perusal I have been able to give to The Nickelodeon at once impressed me with its worth and practical value and interest and I had decided to become a subscriber before receiving your letter.

In my opinion, the motion picture business is as yet but in its infancy and is destined, even long before many will wake up to the fact, to take its place beside the regular drama as an established institution in American amusement enterprises; and a publication like yours may be made a valuable factor in promoting this condition, and in helping to raise the "picture show" above the plane of cheap inferiority and ephemeral popularity.—H. I. Dillenback, Mgr.

La Plata, Mo.

The Nickelodeon:—Inclosed find check for two dollars, for which amount please give me credit on subscription.

There is one feature about The Nickelodeon that is worth more than the price of subscription to any exhibitor and that is your list of releases of films; this enables the exhibitor to know just what class of service his exchange is giving him, I have had exchanges to agree to furnish me with thirty to sixty day released stuff and then give me stuff that was over six months old and I would not know the difference until I would get a repeater. My experience is that the exchanges need watching as close as any one connected in any way with the picture business.—(*Name withheld for obvious reasons.*)

Sydney, N. S. W.

Editor, The Nickelodeon:—Your sample copy of The Nickelodeon received, and I must say that it is one of the best moving picture journals that I ever read. I have instructed Mr. W. J. Morgan, my American agent, to subscribe to your paper, and should he overlook the matter, I wish you would kindly send your paper to me for one year.—J. D. Williams.

Eddyville, Ky.

Editor, The Nickelodeon:—Enclosed find check for $2.00 for The Nickelodeon, and I want to say it is the best paper I ever had that treated on the motion picture business, *i. e.*, not partial to one side. May your paper have a long and prosperous life.—S. N. Dupuis.

A Letter Worth Reading

We are in receipt of a copy of the following interesting letter recently addressed to the New York *Times* by Boyd Fisher, entertainment director of the Educational Alliance of New York City. The letter is well worth reading as it shows some of the higher planes where the motion picture is now at work:

To the Editor:

Dear Sir: Within the last month I have read items and editorials in practically all of the New York dailies in which the moving picture show was discussed, and in no case was the great merit and interest of the photoplay, in itself, given recognition. The attendant evils of the moving picture business have gained attention to the exclusion of the photoplay itself. Unless it be proposed to abolish the moving picture altogether, it is a mistake to give publicity only to the disagreeable features of the business. The making of the photoplay is a new art, as distinct in its technique and its appeal as the making of books and of stage plays are from each other. Its present influence for good is positive and its possibilities cannot adequately be forecast. It is entitled to as serious consideration as a medium of expression as any other art, and more, perhaps, because it is too new to have traditions and conscious technique to guide it.

It is because of this belief that I invite attention of the *Times* to the moving picture shows which are given at the Educational Alliance every Tuesday and Saturday evening. Except for the assurance of decent management these shows make no outward pretensions beyond those of the other picture theaters on the East Side. If our audiences are being educated they at least are not made aware of it. What we do aim to do is to provide an opportunity for the better sort of photoplay to work itself out. We simply exercise care in the selection of films, choosing the ones which we consider at least harmless. For almost every performance we are able to obtain some film the beauty and appeal of which makes us bless the name of Edison, for the invention of the cinematograph. I shall never forget, for example, the picture of Tolstoi's funeral, which was a great feature in this neighborhood of Russian Jews. It may have been "faked" in part, but it was obviously taken in Russia, and the procession that followed the bier into the depths of the primeval forest in which the great man was buried, looked as if it might be a pageant of the characters in his books. This, of course, was not one of the type of photoplays to which the films are always more strongly tending. An example of art in this direction might be made of a recent film entitled "Fisher Folk." It showed how a young fisherman married an inconspicuous little flower girl chiefly to spite his coquettish fiancee, and how the baby which came while he was away on a sea-trip, made him a true husband and father. A trifle mawkish in places and often too obviously done, it showed a marvelous power to build up big effects in a short time, which is the aim of the photoplay. And this thing is all done in silence. This new art is pantomime, but pantomime freed of many of the limitations of the conventional stage, and subjected to the limitations of photography. It takes originality and intelligence to deal with inspiration in terms of an art with new capabilities and new limitations. Should we not then welcome any indications of mastery, and in the meantime be patient of shortcomings?

I have no doubt whatever that many sincere, well informed people would be surprised to know that part of the moving picture shows, at least, are made up of such films as these I have mentioned. Many believe that only Wild West Pictures are manufactured. We seldom display a Western picture at the Alliance, and when we do, we make sure that the reactions of the subject are harmless. And yet we have no difficulty in getting from 700 to 900 people to come to our Saturday night shows.

We should like to make our performances distinctly educational, but we find obstacles in two directions. In the first place we do not have any means of compelling attendance such as schools might have, and therefore must invite our audiences by giving them comedies and dramas which simply entertain. We use all of the scenic and industrial films that are issued, but these do not appear in sufficient numbers to make up tiresome programs. The other obstacle to the maintenance of a distinctly educational show is the fact that the film makers do not put out enough educational subjects. Their chief demand comes from ignorant nickel-theater proprietors, and they do not find it profitable to manufacture a greater number of instructive films. Much of the trouble lies in the fact that the manufacturers do not understand what the educational moving picture show wants. It is not merely animated scenery or a picture of Hottentot dinner-dance. It is such a moral drama, such a little thesis play as "The Red Cross Seal," which dwells on the war on the White Plague, or the "Wedding Bell," which shows the danger of goods made in sweatshops. These films are all from the Edison studios, which, under Mr. Horace G. Plimpton, have made the most progress in this direction. In time, when every school has its cinematograph, there will be a field for the manufacture of purely didactic pictures, and geography, science and history will gain in interest thereby. But for shows which invite their audience the thesis photoplay is the best that educators can hope for. This is why the Educational Alliance is content to limit its educational aims and considers its picture theater mainly as a kind of salon for the exhibition of the better sort of photoplays. It is a New Theater which complains of no lack of nature drama. Yours very truly.—Boyd Fisher.

Police Superintendent Likes Pictures

Sioux City, Iowa, has a "film fan" in the person Jonathan W. Brown, superintendent of police. He says there is nothing he likes better than to comfortably ensconce himself in a cushioned seat in some softly darkened theater and watch the antics of kinodrome stage heroes, heroines and clowns.

At first the visits of the superintendent to the moving picture show houses were of a business nature. He took it upon himself to see that only pictures of a nature which could in no way be offensive were shown in Sioux City. Gradually he formed a liking for the flitting shadows on the white screens, until now he cannot see too many of them.

Slides to Boost Sacramento

By way of educating the people and creating a sentiment in favor of local made products, the Sacramento (Cal.) Valley Home Products league will show slides of Sacramento factories.

The slides show the interior of the soap company with the men at work, the same for the cracker company, the macaroni company and the flour mills.

Each week the products league hopes to exhibit scenes of local factories. In this way it is hoped the people will learn what articles are manufactured in Sacramento and help the factory movement by buying those articles.

Films in Russia

Cinematograph theaters are tremendously popular in Russia. Almost every village has one. Moscow and St. Petersburg have about eighty each. For the empire the number is estimated at 1,200, with an aggregate attendance last year of 108,000,000. At the average admission of 20 cents $21,600,000 was taken in. Admission charges range from 8 to 67 cents. Many houses entertain 100 a night. On Sundays and holidays the crowds are enormous. The pictures shown are largely educational and do much good, especially as so large a proportion of Russia's population is illiterate.

Buffalo Wants to be Motographed

The Chamber of Commerce of Buffalo, N. Y., has recommended that motion picture films be made to show Buffalo's industrial advantages, for the benefit of Buffalo's citizens and the world at large.

Some Questions Answered

By William T. Braun

In this department, answers will be given to questions upon any subject in connection with the conduct of moving picture exhibitions, the operation or construction of moving picture machines, the making of pictures or films, or any questions pertaining to the amusement business which can be answered without specific reference to any person or company. Questions are invited, and will be answered as promptly and as fully as possible.

REPLACING CARBONS.

I have a hard job keeping the door of my lamphouse open while changing carbons. As I have a very small lamphouse, and use it all afternoon and evening it becomes very hot and I am always in danger of burning myself when putting in new carbons.—C. D. F.

I WOULD advise you to buy a larger lamp house, but if you do not care to go to that expense you can fix the old one so that you can remove the entire lamp when adjusting carbons, and not be in any danger of burning yourself.

In the first place have your lead wires enter through the back of the lamphouse. Now instead of having your lamp fastened to the bottom of the lamphouse, secure it to a metal plate so that you can slide it out if necessary, thus allowing you to place it on a bench near the machine while adjusting the carbons. The back wall or plate of the lamphouse can be attached to this bottom plate or may be pulled out from the top of the lamphouse. If it is attached a catch may be placed at the top so that it will be in no danger of falling out and dragging the lamp with it. It also helps to keep the lamp in position.

I understand that a new lamphouse has just been perfected, the lamp frame being on rollers so arranged that it may be pulled out of the back of the lamphouse in much the same manner as described above. It is certainly a boon to the operator.

MOTOR DRIVE ON THE MACHINES.

Do you recommend the use of a motor for running a moving picture machine? Outside of the machine I have a separate dissolving stereoptican and also a spot light to run. A motor would come in handy as it would give me more time to tend to the stereoptican and spot.—R. S. H.

I CERTAINLY do not recommend the use of a motor to drive a moving-picture machine, for the very reason that it allows the operator to tend to other things when the machine should have his attention. If you have more than you can tend yourself you should have an assistant.

The use of a motor drive is forbidden by the ordinances of all of the large cities in this country, for the simple reason that it does not make it necessary for the operator to give the machine his entire attention during its operation. If the film becomes caught in the film gate, and is not pulled down by the intermittent sprocket, the film will pass over the gate down into the rays of light and soon become ignited. Ten chances to one the operator will not see the trouble until the film is afire; but if he had been turning the crank himself he would have noticed it at once. Also if some of the sprocket holes are torn out, and the film slides past the sprockets using up the loops but still passing through the machine as sometimes happens, all of the sprocket holes would be ripped out until the motor can be stopped and new loops made. Again I say, do not use a motor for driving the machine.

PREPARED SCREENS.

You have undoubtedly had some experience with hard finished wall screens. As a finishing coat I have tried two patent preparations, both not up to standard. Kindly tell me what you think is the best to put on as a finisher to produce best results.—R. B. S., California.

IN answering your query, it will not be out of place to give a few points about the construction and finishing of screens.

The market at present is flooded with special screen preparations. Some are in a paint form and are simply painted on the screen; others are preparations put on duck or linen, this cloth then being stretched on the screen. Another kind is the mirror screen.

All of the preparations are compounded by secret formula, but in general have the appearance of aluminum paint. They all cover the same principle. When a sheet or cloth curtain of any kind is used, a large part of the light which strikes the curtain is transmitted through it causing a loss of light. This can be seen by looking at the back of the curtain, which will be seen to be as light as the other side upon which the picture is projected. When these preparations are applied the light cannot pass through the curtain, but is reflected. The great difficulty is to get the preparations coated evenly over the entire screen. Another fault is that some have to be renewed quite often, as the lustre wears off and they then lose their reflecting properties. But there is no doubt if you are using a rolling curtain made of cloth, the picture can be improved by the application of these preparations. When using a rolling curtain the cloth should be well stretched and a heavy rod placed at the bottom to hold it taught.

But if you project your picture on a solid wall or screen, I would advise you to stay away from the screen preparation, as I have yet to see one that will improve upon a good white plaster wall. If you have a hard smooth white plastered wall, and a perfect light, you should secure the best results which can be obtained in projection. The trouble is that the numerous claims for various screen preparations have so influenced the exhibitor that if he is not getting a good clear picture he goes after another screen preparation instead of trying to get a better light. I have known the latter to be the real trouble in more than one case.

I do not think it would be amiss to give directions for obtaining a good, smooth white wall for projection. If a special screen is to be built on the back wall of the theater or anywhere in the theater it can be finished with what is known as ordinary two coat work. The first, or brown coat, should be troweled and straightened with a straight edge, so that when the finish coat is applied the wall will be absolutely level. When this coat is two-thirds dry the white or finish coat made of equal parts of lime, putty and Plaster of Paris is applied, troweled, and brushed to a hard and uniform surface. To get a white and hard

surface a quart of marble dust should be added to each batch of plaster. This makes an ideal wall for projection. Of course when this wall becomes dirty it will have to be painted. A very small amount of blue paint should be added when painting, to give the wall more of a dead white instead of a yellow tone.

Sometimes a screen is made of sheet metal. Although not so satisfactory as the plaster wall, a very presentable picture can be had if you have a good light. The joints should be nailed down smooth and tight, then covered carefully with white lead. The whole screen should be coated with a paint composed of white lead, boiled oil, and turpentine. When kalsomine is used on a metal surface it is liable to peel off.

If you have already applied some of the patent preparations and you are not satisfied with the result, I would, if possible, remove them with sandpaper and apply a coat of white paint.

A neat effect can be obtained by recessing the screen in the rear wall of the theater two or three feet, if possible, and have the side walls and ceiling over this part slope outward and upward to the walls and ceiling of the theater.

Demand Light for M. P. Shows

Special investigators and agents of the Society for the Prevention of Cruelty to Children have completed a survey of all the moving picture show houses and similar amusement places in New York city. As a result of their findings the society will ask that the licenses of forty-five of these places be withdrawn and will recommend a sweeping reconstruction of the city ordinances governing picture shows.

According to a preliminary statement, the society will ask that the system of presenting moving pictures in a darkened place be changed and that a glass screen be used in a well-lighted hall. This is a question for the board of aldermen to regulate and action by that body is expected.

"We do not question the claim that the moving picture playhouse may be an educational institution," says Albert H. Hoeckley, one of the society's managers, "but we are more interested in the respectability of the attaches employed in certain of these places. We have before us nearly a hundred instances in which employes of the playhouses resorted to questionable methods in their treatment of young girls. The continued use of the darkened room to present the pictures is objectionable. It is found possible to throw pictures on glass screens, in well-lighted halls, with better success than in the dark rooms."

Drastic Bill Passed in New Jersey

On March 7 the New Jersey senate passed Senator Osborne's bill making it a misdemeanor to exhibit any motion picture depiciting any act which would be against the laws of the State or the United States.

Senator Bradley doubted the wisdom of enacting such a stringent law, but Senator Osborne spoke vehemently for the act.

"If the moving picture houses cannot find decent, clean subjects to place before the children, let them go out of business. We can't afford to have the youth of the country degraded by such pictures," he said.

Senator Bradley said if the bill passed it would be impossible even to depict a highway robbery.

"Well, what business have they to show such a picture?" demanded Mr. Osborne. "Must they go to the depth of degradation to get their entertainments?"

Senator Bradley thought such pictures might teach a moral lesson.

Senator Edge stood with Senator Osborne. He expressed the opinion that the censorship of amusements would produce better results than to make criminals of owners of amusement places for admitting children under a certain age.

Wolf Attacks M. P. Actor

Half a dozen men employed by a moving picture film manufacturing concern got a bad scare and one of their number was nearly killed March 18 at the Bronx Zoo, in New York, when a giant Siberian wolf broke a chain that was holding him and leaped for "Davy" Crockett's throat.

Arrangements had been made to have a realistic scene, showing "Crockett" capturing and slaying a vicious wolf. Dressed in the garb affected by the famous woodsman, Charles J. Howland advanced upon him in one of the bear cages that had been cleared for the purpose.

As soon as Howland approached, the wolf made a leap toward him, breaking the chain. With a savage growl he rushed to seize Howland by the throat. Howland raised his left arm, around which he had wound a cloth, and the wolf sunk his fangs into it.

Attaches of the park stood almost paralyzed. Then with long pikes and a blaster's netting they attacked the beast, and captured him before he could do further injury. Howland's wound was dressed, but the effort to take the remainder of the moving picture films was abandoned for the day.

Rowdies Create Fire Panic

Cries of "Fire!" from three mischievous boys caused a panic in the Milo moving picture theater on Lyndale avenue, North, Minneapolis, Minn., March 18. Two hundred and fifty people, chiefly women and children, were in the house and when the alarm was given they began a mad stampede for the exit, screaming, shoving and climbing over each other in their frantic efforts to escape. Otto Friedman, owner of the theater, knowing that the alarm was a false one, tried in vain to quiet the crowd and it was only after several children had been bruised and slightly injured that the crowd became calm. Two of the boys who started the panic were captured by the police. They were 16 years old and said they only did it for fun.

Films Aid Arbor Day

City officials of Cleveland, Ohio, acting in conjunction with school authorities, are working out plans for a big Arbor day celebration. City Landscape Architect Rettig announced that an auditorium would be engaged for the Saturday following Arbor day and that motion pictures, showing bird and insect life on a magnified scale, would be exhibited to boys and girls of the schools in the morning and afternoon, and in the evening to adults. In addition there will be lectures on the care and preservation of trees and advice in the matter of ridding trees of insect pests will be given.

Recent Films Reviewed

All For the Love of a Lady.—Edison. A nice romantic costume drama, sumptuously staged. What one likes about Edison settings is their perfect adequacy without over-elaboration. They keep their place and do not obtrude upon the spectator's attention with an obvious bid for "Ohs!" and "Ahs!" Like the perfectly dressed gentleman, they are so well mounted that the details pass unnoticed. In this film the settings fit the actors as well as their costumes do, which is well indeed. The plot is of a type familiar to the romantic historical drama. The heroine dons men's clothes for no particular reason except to be cute; there is a polished villain, and an awkward hero; a stirring duel between the two, attended by all kinds of treachery on the part of the villain, and magnanimity on the part of the hero; the lady finally awards her heart and hand to the ungraceful but manly hero; and the piece opens with a minuet. All these elements are familiar to the historico-romantic drama, but have here received skillful treatment and stir many pleasant sensations.

Bertha's Mission.—Vitagraph. An interesting drama based on an idea that is almost philosophical. Many people, like Bertha, get a mission without knowing what the mission really means until they get up against it. It is the old tragedy of an ideal killed by a fact. This is not a tragedy, however, but a comedy with serious aspects. The life of the slum district is graphically depicted, and Bertha's misguided efforts are realistic in their futility. The lecture-room scene was interesting because it showed most of the Vitagraph stock company assembled in their everyday clothes, and ought to please many picture "fans" who are crazy about the players. It is on the whole a very praiseworthy photoplay, because aside from its undoubted dramatic interest it raises issues that provoke thought.

The Man From the East.—Selig. This film was advertised by its maker as being "unique"—a quality which proves to be conspicuous by its absence. It is old material worked up in an old way. A young gentleman of leisure (we call him such because he wore a Prince Albert in the afternoon and kept a manservant, though his rooms were decidedly shabby) has a misunderstanding with his fiancée, and goes West "to forget." Here he turns the tables on the cowboys when they try to handle him as a tenderfoot (which has often been done before) and wins everybody's good will. Pretty soon it happens that the girl in the case comes West to visit in that very vicinity. Our hero meets her under circumstances conventionally dramatic; reconciliation ensues; and the bride and groom depart amidst the cheers of the ranchers. It is difficult to discover anything unique in this very familiar drama. The material is good enough but not new. As the scenes are enacted deftly and with spirit, they poke up the old embers of convention and give them a fresh glow.

The Pepper Industry in the Malay Peninsula.—Pathé. A Pathé industrial of familiar type. In length it is somewhat briefer than our curiosity approves. The pictures gain much from the application of color.

Inventor's Rights.—Pathé. A logical drama presented in good style and acted with great skill. The court scene is a remarkable bit of staging, having the solid aspect of reality. The setting formed a striking background for drama—so striking that the producer was tempted to do something "big" and had the villain up and die. This was more theatric than dramatic. The scene in the tire factory is also notable. The story disclosed has undoubtedly had many a counterpart in real life, except perhaps that poetic justice does not usually take such an active part.

Was He a Coward?—Biograph. No, of course he wasn't. The film effectually proves that. He was not a physical hero, but demonstrated his bravery on higher planes. It is good to see a drama that sets up spiritual standards of heroism again. The Western photoplay with its glorification of the physical has done much harm in persuading audiences that the hero is he who has the hardest punch or the quickest gun. This film goes right into the heart of the old western territory and plants a new standard, or at least calls attention to one that has too long been forgotten. The hero, who has come West for his health, refuses to engage in a fistic combat with a burly ruffian of the place because he can see no use in it. He is willing to admit that the other man is physically stronger without putting the matter to test. This bit of reason and light is rank heresy to the Westerners, who brand him a coward. Later small-pox breaks out on the ranch, and he is the only man courageous enough to tend the sick ones and bring them through to health. His bravery works a change in public opinion, and he gets the pretty girl, who has been more or less concerned throughout, though we haven't had a chance to mention her. The drama is strong in many ways, and adds one more leaf to the laurel crown which Biograph has been weaving itself lately. What we wish to emphasize about the film is that it is a Western of a new type, logical, dramatic, strong, without any recourse to methods melodramatic. It chanced that this reviewer saw on the same program Selig's "Man From the East," a pretty good Western of the old type. To say more would be odious.

The Wedding Bell.—Edison. An uplift subject ably presenting its message of reform. The moral is clear, but not so obvious as to weigh down the drama with self-consciousness. The moral has indeed been so skillfully wedded to the action that there is no scene or episode which could be eliminated without sacrificing a vital part of the drama. It is first of all a strong convincing play, and the moral reaches home through dramatic channels. The production is of highest adequacy, both as regards acting and settings.

Redemption.—Eclipse. A film that is notable for its fine settings, if for nothing else. The settings are not pretentious in an historical or architectural way, being just a French country home and its environs; but as such they are tastefully adequate. It seems to be the Eclipse policy to choose natural settings wherever possible, and this policy is constantly justified in their films. "Redemption" is a moral subject, rather ponderously executed. The psychology of the boy's dream is questionable, as children are not given to ethical prevision, whether dreaming or awake. The dissolving views were clumsily managed. The acting shows ease and polish.

The Thames from Oxford to London.—Eclipse. An exceedingly enjoyable scenic. The beauty of the scenes and their suggestions of English life and character, give the film a deep and profitable interest. It is unusually long for a scenic, but a large audience followed it with close attention, without any indications of uneasiness or boredom. The old bugbear that was supposed to roost on scenic and educational subjects has, we hope, emitted its last croak.

Funeral of Archbishop Ryan.—Lubin. A topical film of great interest. The camera man seems to have been signally favored, with a vantage point right at the center of things. The venerable corpse is plainly seen and the procession of prelates and priests comes almost within touching distance. When seen by this reviewer the film suffered from the prestissimo hand of an operator who was in haste to get his lunch. Under proper conditions the spectacle is doubtless impressive.

Oh You Teacher!—Essanay. Country types and country environments plus a group of grotesque females give a humorous interest to this film. The love story is not very vital—at least, the actors did not make it so. The school-room setting has a realistic aspect, and the children's antics afford amusement, reminiscent of by-gone days. The types are all well characterized, with the exception of the envious young Miss, whose appearance is too trim and sophisticated for country circles.

Vanity and Its Cure.—Lubin. This film is an excellent example of a well-built comedy. The basic idea is inherently possible and true to human nature, and the working up shows ingenuity with just enough exaggeration in the details to make them dramatically effective. This kind of exaggeration is allowable to almost any extent so long as the main drift remains true. For instance the repentant wife's clandestine departure from the home of her parents through the back window was unnecessary and scarcely probable, judged by rigid

canons; but it was dramatically effective, and suggested the higher truth that her departure was in the nature of an *escape* from drudgery. Many other details have received a humorous exaggeration that is very telling. The piece is cleverly acted, and tickles the brain as well as the ribs. In the copy seen by this reviewer one of the scenes came out of its proper order, which is a glaring blunder, but in no way detracts from the merit of the film as drama.

The Department Store.—Edison. One would suppose that the bundle of complications and cross-purposes which this comedy discloses would provoke a cyclone of mirth, but such was not the case. It passed almost without a laugh. The fault is due to the acting and general presentment, which is slow, heavy, and serious. The little drama may have been serious to the actual participants, but surely the crowd of onlookers would have seen the humor of the situation and burst out laughing. An American crowd certainly would have done so. Yet the film shows us a group of young Americans who stand stolid and unappreciative in the presence of an occurrence that is as nearly farcical as anything real life ever developed. It is an excellent little plot, plausible and human, and, handled in the proper spirit, should have worked wonders.

Baby's Fall.—Edison. One scarcely knew whether to laugh or work up tremors over this film. There was a child in peril, a fainting mother and an ambulance; on the other hand there was our old farcical friend Bumptious coming to the rescue with a crowd "in chase." A queer juxtaposition of the serious and comical, typically Edisonian. Mock heroics rescued the baby, and the end is merry. The piece stirs considerable interest, owing to the precarious position of the child and her engaging nonchalance.

Davy Jones, or His Wife's Husband.—Vitagraph. Not as well conceived as many of the Davy Jones comedies that have gone before it. The action drags in several places and the logic of the situation gets pretty thin. What did Davy aim to accomplish by his hydrophobia? Nothing very definite so far as the film shows. And having "sprung" it, what was his object in keeping it up? The situation lacks the plausibility which even farce must have. There are many funny episodes, however, and the reel fills fifteen minutes with a goodly proportion of laughs. The best part of the film is found in those scenes where the undertaker is concerned. Mr. Stiff is a richly farcical character and receives competent interpretation.

Red Deer's Devotion.—Pathé. Melodrama pushed to the limit. Of its class, the piece is fairly well done. Probability is lacking in several points, but that is rather to be expected. The marriage between the Indian and the white heroine is not calculated to make the film popular; it hits one of America's most adamantine prejudices. The audience was heard to mutter over it. The photography is commendably clear and steady.

Oh, You Kids.—Pathé. Boyish pranks and winter scenery win for this film a cordial reception. The action keeps the trap drummer busy with his slap-stick; but this is not objectionable, because boys' pranks are of that nature. The incidents move swiftly and seemed to please a houseful of grown-ups.

Teaching Dad to Like Her.—Biograph. An amusing comedy presented in Biograph style. It is strung along quite a bit at the start, but all the incidents are well conceived and briskly executed. The end is richly comic. It is a rather spicy subject, but need offend none but professional puritans.

Mammy's Ghost.—Vitagraph. A good war-time drama with a dangerous situation solved in a humorous way—always an effective combination. The unctuous old negro mammy did her part very well, and her stratagem was not a bit unplausible. The settings suggest the old South successfully, and the war-time atmosphere is also well created.

The Red Eagle.—Vitagraph. An Indian drama showing much pathetic effort on the part of the actors to appear Indian. The conception of an Indian which photoplay actors have built up, one copying from another, is a prodigious thing. To be a stage Indian, swell out your chest, put a bulldog curve on your lips, grunt occasionally, and assume the gestures of a ham-actor in the role of Virginius. The only difference between a stage Roman and a stage Indian consists in makeup. In both cases they try very hard to be something, without knowing just what or how. The action of "The Red Eagle" is very slow, probably in order to keep pace with the would-be dignity of the actors. The dramatic effect is toneless, like the pictures. The white villain gives a performance that is full of character. The eagle pictures were cleverly consummated.

The Code of Honor.—Selig. An interesting film showing the absurd duelling customs of Germany. They would be comical if not so dangerous. The Selig company has presented the matter very painstakingly and instructively. The duel with swords is about as realistic and businesslike as any such scene ever presented on the stage—really a most sanguinary and thrilling spectacle. The petty nature of the quarrel, however, deprives the scene of anything like dignity or dramatic impressiveness. The scenery is adequate and the acting entirely satisfactory.

Of Interest to the Trade

By L. F. Cook

New York Letter

In film centers here the atmosphere is rife with rumors of all sorts. Some of these rumors are of a very serious nature, while others are equally ridiculous and receive but very little credence. However, after the smoke has all blown away and the exact situation is clearly revealed, there will still be an industry that is well worthy the serious attention of business men. This has been the history of other business and is bound to be the case in this field of endeavour.

History, according to Emerson, has one great use, in that it brings to our present needs the experiences of the past; the past becomes present, and if we will only use our faculties, we can, with the aid of history, adapt the experiences of the men of the past, to our present needs.

This being the last New York letter of the weekly Nickelodeon we are, with the permission of our readers, going to speak of history.

It is a funny situation, but it is a fact that most of the men in the film industry are at this moment ignoring this all important history. There are in the whole moving picture industry over thirty manufacturers or importers of film in this country. This number includes men who have been pioneers in the business as well as the newest recruit to motography.

As a bystander, we have watched these men for a long time now, making a record for their comings and goings, of their development and their retrogression.

The study of a class of business men requires that the student learn something of the past of these men, that he may know of their early environment and correctly judge their present actions in the light of the past. Applying this knowledge of the past, it is very easy to see why these men have not applied the teachings of history to the present situation; nor will the film industry ever be anything but a chaos until this

is done. These men, with few exceptions, brought to the film business little if any previous business training; that is, business training in the scientific sense. Lacking this training they are ignorant of business history, and therefore unable to apply these teachings to the present situation.

This condition is not true of all the men now in the business—there are a few exceptions; nor will it always be true of any except a very few. But until the time arrives when those who now have no conception of scientific business principles are willing to learn, it will continue to be a wild scramble with the devil continually at the heels of those in the rear.

The making of a trade paper requires that its editors study men and measures. Those who made The Nickelodeon brought to it a knowledge of men and of business methods gained in other fields. In spite of strenuous assertions to the contrary, those methods, altered only as to details, fit this industry just as they will fit any other industry ever conceived. This is history again.

In July, 1909, over twenty months ago, The Nickelodeon published an editorial, saying in part that the first run craze was foolish and ought to cease; that if a film was good there was no reason why it should not be run as a repeater, and to successful audiences. At that time, according to the writer's personal knowledge, that editorial lost The Nickelodeon business, and the manufacturers said we were wrong. Yet in a recent issue of the manufacturers' house organ this same argument is set forth in all of its original glory. If it is right now, why wasn't it right then? This idea was the result of history, of bringing the experiences of the past to shed light on then present situations, yet it took these men nearly two years to understand what they had read.

On August, 1909, The Nickelodeon started a series of articles on the patent situation. The author of these articles brought to his subject a long, honorable and very successful career as a patent expert, and the articles were wonderfully clear. This was over eighteen months ago, yet it is only recently that the fight has narrowed down to the lines the author laid down. And it now happens every day, here in New York, that men conversing on the patent situation, give utterance to ideas they could have read eighteen months ago.

We could mention many such examples, but these will serve the purpose. History will show just how true history is.

It would seem as if the methods of reformers here in New York City needed reforming, for somebody appears to have got the wires twisted.

The trouble started with an editorial in the New York Times, wherein was used the fact that the laws regarding moving picture theaters in New York are obscure and hard to understand, as a peg of truth upon which to hang a very ridiculous conclusion. This was further augmented by a letter published by Albert W. Hind, chairman of the Conference on Motion Pictures. In this letter Mr. Hind rather strongly intimates that the National Board of Censorship is too closely in touch with the film manufacturers. Next day Walter Storey came to bat with a letter announcing that there is perfect harmony between the various civic bodies that compose the Conference on Motion Pictures.

To friends of motography, it seems a shame that somebody is trying to raise a dust in an endeavor to obscure the good work already done. The Conference on Motion Pictures has made a very thorough investigation of the moving picture theaters of New York. Commissioner of Accounts Fosdick has also made an investigation, and Alderman Ralph Folks, a member of the Board of Censorship, has introduced a resolution calling for an investigation on the part of the aldermen of New York. It is hoped that these various investigations will go a long way toward alleviating the conditions of the New York exhibitors.

Those who understand conditions in New York City appreciate the fact that the National Board of Censorship is more closely in touch with the facts in the case than any other civic body. No body who knows John Collier or Walter Storey will listen to the inference that they are too closely in touch with the manufacturers. However, it is quite probable that their intimate knowledge of the moving picture situation has caused them to step on the toes of somebody who is not so well informed. Whatever the cause, we believe the above named men can do more effective good, in the picture game, than all the so-called reformers in New York. They have the confidence of the moving picture industry, and that industry realizes that after the long sought changes have been obtained, there will still be a use for the National Board of Censorship, while the Conference on Motion Pictures will probable cease to exist, and some reformers will have to look for something else to reform.

There is no doubt that conditions governing moving pictures theaters in New York are bad. This is not the fault of the exhibitors, but a condition created by the antiquated laws on the subject, and until these laws are changed, there can be no marked improvement in general conditions. Those contemplated changes will perhaps do more good for the exhibitors themselves than for any other class, and it is to be hoped that nobody else will attempt to throw a monkey wrench into the machinery that appears to be working so smoothly.

If this sort of thing were to keep up. we are afraid that this column would have to change its name to "Knockers Knoll," but we have to take a crack at Thanhouser.

Here before us is a Thanhouser circular, announcing the release of "Silas Marner." "Silas Marner" is one of George Eliot's best works, is one of the classics of English literature, and teaches an excellent story. The synopsis indicates that the original story has been followed with a pleasing fidelity. This is most excellent, deserves high praise, and the film itself will undoubtedly be of great value to the whole industry.

But wait, here comes the knock. The trouble is that trade mark again. The cut illustrating the circular shows the interior of Marner's hut, and nearly in the center of the door in the back drop one can see the trade mark. Somehow it rather gives the impression that Marner leased that cottage from the Thanhouser company.

We are at a loss to understand why some manufacturers persist in this practice. It has ruined the complete enjoyment of many a moving picture enthusiast and patron, and apparently does the film maker absolutely no good. Lines in the moving picture field today are pretty closely drawn. For business reasons, no manufacturer of either faction would reproduce the work of another, so the use of trade marks cannot be for protection among their competitors.

If the idea is to prevent duping, it is simply wasted energy. Instead it offers a jarring note that in some cases is simply maddening. There is more or less duping going on here in New York all the time. There always has been, trade marks notwithstanding, and yet no one of these dupers has ever been brought to justice. If the insertion of these trade marks gave the slightest protection, we would suffer in silence; but in the absence of any protection, we can only believe that the manufacturers who insist on this feature in their pictures, see in their use only another way to get added publicity. If this is true, it is not fair to their fellow makers, it is not fair to the exchange men, it is not fair to the exhibitors and it is extremely distasteful to the thinking patrons of moving picture playhouses.

Vitagraph Notes

Every exhibitor can underscore the release for Friday, April 14. "Though Your Sins Be as Scarlet" will create a sensation of interest and admiration that will undoubtedly cause thousands to come and see it and marvel at its beauty and deep significance as a powerful picture sermon that will reach the masses where words fail.

This coming week the Vitagraph releases will afford a variety of subjects to meet the tastes and satisfy the longings of the public. "Billy's Valentine" comes first. It is a bright, cheerful and sparkling comedy of good-natured fun. "Inherited Taint," a society drama that awakens a strong interest, and the realization that in ourselves we possess the power to overcome the sins of our forefathers and establish our own standard of character. "A Republican Marriage," the third release, gives us a powerful French historical drama that embodies the human and romantic, surrounded by all the magnificence of the eighteenth century.

Motion Pictures in Court

Motion pictures of a half-mile stretch of the Frisco Railroad track were shown in a St. Louis court recently as evidence in a suit for damages brought by Mrs. Nannie C. Powell, on account of the death of her husband, who was run down by a passenger train while walking the track.

Her attorneys contend that the accident was caused by the man being obliged to walk the tracks on account of the rough nature of the country. To offset this the railroad's attorneys had a motion picture film made to show that there are paths on both sides of the track where the accident occurred.

A later report from St. Louis states that there will be no moving pictures exhibited to the jury in the case of Mrs. Nannie C. Powell against the Frisco Railroad, the judge deciding yesterday, after seeing the views, that he himself was unable to determine anything from them.

Picture Show in School House

Thirteen hundred men, women and children witnessed a motion picture entertainment in North Division High school, Milwaukee, Wis., on the evening of March 7. Five hundred people were turned away. It is planned to give future entertainments of a similar nature.

Film Makers at Salt Lake

A newspaper report from Salt Lake City states that the importance of the international aviation meet to be held in Salt Lake the first of April is shown in the number of bids for the motion picture concession received at aviation headquarters. Bids have come in from some of the largest film concerns in the country as well as from Salt Lake companies.

Two concerns, one located in the east and the other on the coast, announce that if their bids to make pictures are accepted they will remain in Salt Lake and Utah a number of weeks, taking views of the canyons and mountains, where picture plays are to be acted out.

Straight Theater Converted

Beginning on March 27 the "New York," one of New York City's first class legitimate theaters, will be devoted to motion pictures and vaudeville, for at least three months. Recently the New York Theater Company closed a three-months' lease with William Fox for the house, and it is Mr. Fox's intention to make this one of his circuit of theaters, which includes the City, in Fourteenth street, and several other popular-priced places. The policy of these theaters is vaudeville acts, interspersed with motion pictures.

Bill to Prohibit Pyroxylin Films

A bill to prohibit the use of pyroxylin films in motion picture houses has been prepared for introduction in the Ohio house of representatives. The measure is said to be partly the result of the Russian catastrophe of recent date when some ninety people were killed in a burning motion picture show. Independent exhibitors believe that the licensed manufacturers are back of the move, as such a law would put out of business all who use any but "non-flam" stock.

Schools Buy Picture Machines

The Washington school, a public institution of Oakland, Cal., has received funds for the purchase of motion picture machines to be used as an auxiliary to class-room instruction. The school board of Decatur, Ill., is contemplating a similar step. Mr. John Collier's prophecy that motion pictures will be used generally in the school room within two years is thus receiving daily confirmation.

Municipal Show in Toledo

The city of Toledo, Ohio, recently held a municipal show at which the various industrial, governmental, social and scenic features of the city were exhibited. Motion pictures were largely the vehicle of representation. The show was largely attended by Toledo's interested citizens, who departed with their patriotic sentiments greatly enhanced.

Kalem Seeking New Site

Sid Olcott, representing the Kalem Company, has been in Asheville, N. C., looking over the city and its environs with a view toward establishing headquarters there.

Synopses of Current Films

Essanay

GETTING HIS OWN BACK.

Reggy Van Astor, a thoroughly harmless young man of wealth and fashion, is in love with Lola Gilbert, an actress, but the prospect of a match between the two is darkened by the objection of Reggy's father. We find Reggy, at the opening of the story, preparing to call on his beloved Lola. A tailor enters carrying with him Reggy's newly creased trousers. Reggy visits Lola but while waiting for her to come down an escaped convict enters and forces Reggy to change trousers with him. The convict then leaves and Reggy and Lola are engaged in lovemaking when the maid announces Reggy's father. The young man is hidden in a room to the left when the "guvner" enters. Van Astor tells Lola she must have nothing further to do with his son, when Reggy, who in the meantime has disguised himself to look like a most vicious character, enters the room, holds up his father and conducting him to another chamber forces him to exchange trousers. Reggy then leaves but comes across the escaped convict and covering him with a gun drags him back to Lola's apartments. Here things have reached a crisis, as two prison guards have entered and arrested Van Astor, thinking him the escaped convict. The proper exchange of trousers is then made and Van Astor decides to allow his son to marry the actress.—600 feet.

LOST—A BABY.

A young married woman with a three months' old baby enters a hardware store, leaving the baby carriage outside. She shows the clerk the baby, then starts to make her purchase, when a lady and gentleman enter and tell her that some small boys have run away with the carrage. She asks the clerk to hold the baby and she runs out after the young culprits. Noontime arrives and the clerk, expecting to be relieved by the proprietor of the store, hides the baby under the counter. In the meantime the mother has run down the boys and returning to the store with the baby carriage, asks the proprietor for the baby. He knows nothing about it and she, thinking the baby has been kidnapped, has the proprietor arrested. This latter is taken to the station, continuing to plead innocent, and is in danger of being mobbed, when the clerk is dragged in. The clerk recalls now where he left the baby, and after returning to the store, restores it to the frantic mother.—400 feet. Released March 28.

ACROSS THE PLAINS.

Here is a dramatic photoplay of the old West which has in it a thrilling and sensational race between a prairie schooner, driven by a lone girl, and a band of hostile Indians—a picture that will thrill. Jennie Lee and her father are on their way to Golden California, from a little Kansas farm, traveling in a prairie schooner. At the last settlement, visited by the two, the old man, who has a weakness for drink, purchases several bottles of whisky, which he begins drinking when they have made camp for the night. A lone cowboy calls upon them and finds the old man in a jovial

mood and cautions him to beware of a hostile tribe of Indians, through whose country they are now traveling. Unmindful of the warning, Lee continues to drink until thoroughly intoxicated, despite the pleadings of his daughter. Suddenly over the brow of a hill a scouting Indian is seen to appear, sees the wagon and the drunken white, and slipping cautiously away goes to his Indian village where he informs the other braves of the trespassing settlers. The Indians leap astride their shaggy ponies and with war whoops ride off to make short work of the whites. The girl sees them coming and implores her father to get into the wagon, but he refuses and the girl, knowing that she must act quickly if she would save her own life, springs into the wagon, seizes the reins and urges the horses to their utmost speed. After a long and thrilling ride in which the Indians gradually gain on her, she is joined by the friendly cowboy, who sends a crony who was with him, to a neighboring ranch for help. The girl and cowboy race the Indians and pull up at a deserted shack in which they protect themselves against the Indians until the arrival of the ranchmen, who disperse the Indians. The girl expresses her great joy at being rescued and upon proposal of her cowboy protector that she marry him, she readily agrees.—990 feet. Released April 1.

CAUGHT WITH THE GOODS.

This is the laughable story of a young man who is sent to jail for thirty days and who has a very hard time of it in keeping his wife ignorant of the truth about his whereabouts. "Fitzie" McClellan, a young married man, is invited by George Warren, a friend, to go out for a good time. Fitzy accepts when he is told of the gay time he will have and upon leaving the house tells his wife he has to meet a business man. The wife, however, is suspicious and, accompanied by a gentleman friend, visits several cafes in the hope of trailing down her husband. Fitzy becomes sadly intoxicated and in an argument with a cabman, does considerable damage to this latter, whereupon he is arrested, taken to the station and let out on bonds. He is accompanied home by a detective who locks the culprit in his room and sleeps just outside the door, with the key in his hand. The next morning he is taken to court where he is sentenced to thirty days in jail. Fitzy is alarmed for fear his wife will find out his disgrace and sends a note by Warren telling her he has been called to Mexico for *thirty days*. Three weeks elapse and Mrs. McClellan, knowing her husband will be home from Mexico in a week, plans to give him a reception in true Mexican style. She employs a Mexican man and woman to teach her and her guests the language and dances. Warren hears of this and takes books on the language to McClellan who proceeds to inform himself on Mexican customs, language and dances. On the day of the homecoming, McClellan, togged out in true Mexican costume, makes a hit with his wife which partly mollifies her when one of Fitzie's jailers breaks up the festivities by announcing that Fitzie had not been to Mexico but in jail. The truth out, Fitize wittily obtains his wife's forgiveness and the film closes happily, with each promising to never again deceive the other.—1,000 feet. Released April 4.

Nestor

THE TRUTH.

Wilton Gray was innocent of forging his firm's name, yet so strong was the circumstantial evidence against him, that the attorney for Messrs. Black & Chapin succeeded in having him convicted. Left with little Rosie to provide for, Mary Gray made a noble struggle to obtain employment, but to each place which she applied, either it was already taken or the young mother was incapable of filling it. At last, through Rev. John Chapman's advice, a typewriter was sent up and Mary started practicing in earnest. But so anxious was she to get to work, that long before she was capable of holding a position, the clergyman obtained a situation for her at Crosby & Adams. However, although willing to stretch a point to oblige their rector, Mary's inexperience was so apparent, that they were forced to let her go. But, fortunately, Mr. Adler, her kind-hearted landlord, lost no time in informing the clergyman of what had occurred. accordingly, upon his housekeeper's advice, Mary and Little Rosie were brought to the rectory, and it was not long before the mother was able to act as amanuensis for her friend. All would have gone well had not Martha Higgins and Carrie Little happened in as the clergyman was soothing the happy wife after her hysterical outburst of joy when she learned that the real forger had confessed and that Wilton would be with her soon. Not waiting to hear the cause of the scene, the gossips hastened to the elders of the church with their tale; and, as a result, Rev. John Chapman was solemnly waited upon by a scandalized committee, who sorrowfully demanded his resignation. Quietly the clergyman motioned his accusers to the sitting-room door; then, softly drawing aside the curtains, disclosed to their astonished gaze—the Gray family, Wilton, Mary and Rosie, oblivious to all else, save their joy at being united.—969 feet. Released March 29.

Vitagraph

THE INHERITED TAINT.

Herbert Waring on coming of age inherits a large fortune which is handed over to him by his uncle, John Waring, who at the same time warns him that he inherits a passion for drink from his father and grandfather, and bids him beware of it. Herbert heeds the warning and for a time all goes well, he becomes engaged to a society girl, Pearl Langdon. She is a heartless coquette and throws him over for Jack Thurston. Driven to despair, Herbert takes to drink and is soon on the downward path. At last through the interposition of John, his uncle, he is removed to a sanitarium for the cure of inebriates, there he meets with a young nurse, Kathleen Holt, and falls in love with her. He is pronounced cured but is doubtful of himself. He asks Kathleen to marry him; she tells him that if he can resist his temptation for a year, he may come and claim her. He goes out into the world and meets his old love Pearl, now Mrs. Thurston. She pretends sorrow and repenance, through her influence he is moved to taste wine and the old longing comes back to him. He goes to his room and orders liquor, but his eyes fall on the photo of Kathleen and he dashes the glass to the ground. He fights his year's battle and wins it, claiming Kathleen as his reward.—Released March 31.

A REPUBLICAN MARRIAGE.

Helen de la Croix, an aristocrat and owner of large estates near the Loire, is of a proud and passionate disposition and has been brought up to look on the peasants she rules as little more than cattle, and as such she treats them. Bernard, a blacksmith on her estate, who by means of the literature of the day has imbibed the doctrine that all men are equal. He has often seen the Countess and conceives a passion for her. One day as she is riding over her estates attended by a retinue of servants, her horse casts a shoe, she stops at Bernard's forge to have the shoe replaced, and finds the blacksmith reading "Rousseau's Contract Social." She snatches his book from him and berates him for reading it. Upon leaving she offers him money, which he refuses. She accidentally drops her handkerchief, he picks it up and places it in the bosom of his shirt as a cherished talisman. A short time after these incidents, she is storm stayed in an old hunting lodge, which is struck by lightning, and Bernard rescues her from the burning building. She wishes to reward him, she calls him to her castle and offers him money, which he refuses, telling of his love for her. She commands her servants to cast him out from her gates. Some years later, her castle is besieged by the Revolutionary soldiers, her servants fly, but she refuses to leave her home. She falls into the hands of Garriere, the leader of the Revolutionists. He offers her and her cousin Cyril freedom and life, if they will embrace the cause of the Republic. Cyril accepts, Helene refuses and defies him. Bernard, now a sergeant in the army, pleads for her. Garriere refuses to listen, thereupon Bernard renounces his allegiance to the Republic, espousing the cause of the Countess. Awaiting their doom, Bernard is given a last

opportunity to rejoin the Republic, he chooses death with Helene. She tells him he is a man and she loves him, they plight their troth, and they are led to the guillotine happy in each others' love.—Released April 1.

AN UNEXPECTED REVIEW.

The Commanding General is invited by his Excellency the Governor, to attend a banquet at the Executive Mansion. Great preparations are made for the reception of the General and his staff, the spread is elegance personified, and grandeur in the extreme. The General arrives with his escorts, composed of his aides and a company of cavalry men. While the dinner is being served in the Gubernatorial halls, everything is becoming convivial, wit and beauty intermingling in delightful enjoyment for all. There is another feast being served in the kitchen of the Executive, the servants with the soldiers who have escorted the General are whooping things up at a lively rate and having the time of their lives, the butler gets such a magnificent souse on he is anything but graceful, and not at all helpful in adding dignity to his position, much to the chagrin of the Governor and the hostess. Suddenly a crash is heard below-stairs and everybody at the banquet jumps up in alarm, their fears have scarcely been quieted by the assurance of the General, that it is of no consequence, when a second "slam bang" echoes through the dining hall. This is too much, the Governor, the General and the hostess rush down-stairs, find the kitchen scattered with broken china, foodstuffs and furniture, through which the staggering, drunken soldiers and servants are making frantic efforts to perform a Virginia Reel. The General calls his men to attention and marches them from the room. The butler as the commander of the culinary and commissary departments, calls his forces to attention and orders them from the room. The strain has been too great for the butler and his assistant and after it is over they are all in and certainly look it as the picture closes.

HOP PICKING.

Scenes taken in Kent, England, showing the whole process of cultivating hops and the handling of the product through its different processes of development, planting, fixing the poles, cultivating, stringing, ladder tying, spraying the hops to cleanse them from fly pests, sulphuring, picking, young hoppers, hop-pickers at lunch, tallying, making charcoal for drying the hops, burning the charcoal, removing charcoal to drying kilns, taking hops into the yost, leaving for the station and some sampling. In addition to the industrial end of the picture, it presents some very beautiful scenery peculiar to that section of England, that is famous the world over.—Released April 4.

FOR HIS SAKE.

Mr. Johnston being left a widower with two little children, Bob and Nell, finds it a very difficult matter to give them the care and attention which only a mother can bestow. He decides to marry after having found an excellent young woman, whom he believes would be the proper person to care for his loved ones. He sends Bob and Nell to his mother's, the children tell her that their father is going to marry again. Their grandmother is very much disturbed and tells them that step-mothers are not the most desirable kind of parents ,and the children make up their minds there and then that they will never go home to their papa and new mamma. The father arranges with his wife for her to act as governess to his children, not letting them know that she is their step-mother. The children return home when they hear that their father and his wife have gone away and left them in charge of a governess. The step-mother as their governess makes every effort to win the children's love, and she succeeds by making herself sweet and lovely to them and soon has them completely won over. When the father sees that the children have given their little hearts to his wife, he is delighted and introduces Bob and Nell to their new mother, whom they so dearly love. His wife says, "Yes, I have won their love, but how about their father's," he tenderly embraces her and tells her that he loves her, and their happiness is complete.—Released April 7.

THE TEST OF LOVE.

Edison

Henry Harris and his ward, Edith, who has been blind since her birth, are devotedly attached to each other. While reading the daily paper to her one day he sees an article about an eminent German oculist who has come to this country and who has made several wonderful cures of cases which were considered hopeless. Edith's great desire to see and to look upon her guardian's face so affects Henry that he finally yields to her importunities and agrees to take her to New York to the great oculist. This decision is not reached without a great struggle on his part, for Henry is not a handsome man and, not knowing how Edith may have pictured him in her mind, he is fearful, if the operation proves successful and she sees him as he really is, that in her great disappointment she will turn from him. However, his great love for her triumphs, and he takes her to the oculist, who, after careful examination, declares that he can restore her sight. Edith's joy at hearing that at last she will be able to see the face of the man she has learned to love through her years of darkness only increases Henry's fear of the final outcome, but he heroically determines to sacrifice his happiness if only Edith can obtain her sight. The operation is a very expensive one, and he finds that his meagre savings are not sufficient to defray the cost, so he hurries to his brother, whom he has not seen for years, to ask his help. Upon arriving at his house Henry finds that his brother has developed into a handsome, dashing man of the world, who is eager to help him out of his difficulty but who owing to a slump in the market which caught him unawares, finds himself on the verge of bankruptcy. However, he gives Henry what little ready cash he has, and with this as a beginning, Henry goes back home to raise the balance. After borrowing from all his friends he still finds himself short a considerable amount, which he finally raises by pawning everything of value that he owns, leaving himself penniless and in debt but buoyant in the hope that his great sacrifice will not be in vain. He pays for the operation and brings Edith home in triumph. Once at home the old fear of losing her returns and, as the time approaches for the removal of the bandages from Edith's eyes, the strain becomes too great and a plan finally suggesting itself to his anxious mind, he sends for his handsome brother. Upon the arrival of the brother, Henry explains his fears and begs his brother to take his place when the bandage is removed from Edith's eyes, that she may believe that it is really Henry whom she sees before her. Realizing Henry's great love for Edith, the brother finally consents. He removes the bandage and stands before her to await the result. As she grows accustomed to the light, one by one the objects in the room take definite shapes. The operation has been successful! With a cry of love and joy she rushes into the arms of the man before her, only to recoil in alarm as he answers; the voice is not Henry's! Slowly approaching him again, she closes her eyes and runs her fingers over his face; the features are not Henry's. Who is this strange man? Panic-stricken, she starts to rush from the room, only to come face to face with another man. He speaks to her and she at once recognizes Henry's voice and, closing her eyes once more, she passes her hands over his face, to assure herself that she is not mistaken; the features are those of Henry, and she is enfolded in the arms of the man she loves.—1,000 feet. Released March 21.

WHO GETS THE ORDER?

A wholesale customer, who is in the market for a large order of goods, writes identical notes to the two concerns who have bidden for it, promising his order, as the prices and quality are the same, to whichever representative reaches him first. Blinks and Jinks, the two salesmen, both resourceful "knights of the grip," and both confident of success, leave their respective offices and meet at the railroad depot, where they discover that their missions are identical. They then and there begin a contest of wits to win the coveted prize. Blinks, having purchased his ticket first, is awaiting his competitor in order that he may keep an eye on him. His ticket, held carelessly in his hand, is stolen from him by a pickpocket, whom he chases, but to no avail. Realizing that he might miss his train he rushes madly back just in time to catch the train as it is pulling out. Not wishing to pay his fare twice, he slips into the seat with Jinks and while the latter's attention is momentarily distracted, slyly helps himself to the train check in his competitor's hat. The conductor, taking up tickets the second time and seeing Jinks without a check, begins an argument which results in the latter's ejection from the coach and a rude boost from the platform. Blinks, exultant in his apparent victory, continues on his journey until the engine is incapacitated and he is forced to walk, to his deep disgust and the intense amusement of his fellow passengers. While walking he encounters a tall, ungainly looking tramp, who relieves him of his hat and coat. Despondently he walks the track and upon reaching a crossing, sees to his chagrin his competitor madly riding by on a bicycle which he had inveigled a country lass into lending to him. In the course of events Blinks tricks a man in an automobile to take him to town; Jinks, who meanwhile has met with an accident on his bicycle, works upon the sympathies of a wagon driver, and after a series of complicated situations they reach the customer almost at the same moment. The customer is nonplussed for the moment but finally devides his order, giving each one-half, which results in a happy termination of their desperate struggles, and they all go out to have a drink together.—995 feet. Released March 22.

THE DISREPUTABLE MR. RAEGEN.

In the story of "The Disreputable Mr. Raegen" we see an inhabitant of the lower East Side of New York who is under suspicion and being watched by the police, and we follow him through the events of one night which lead to a complete change in his life. The first scene shows his entrance into a saloon and that the police officials on the corner know the man and his unenviable reputation. Inside the saloon a young collector carelessly displays a roll of bills in his wallet, and in paying his bill for drinks, slips the wallet into the back pocket of his trousers. Another habitue of the saloon, a man by the name of Smith, feigning to drop his hat, deftly picks the pocket of the young collector and slips the empty wallet, after removing the bills, into Raegen's pocket. Of course, the alarm is spread, and in a tremendously exciting scene, in which Smith puts out the lights, the place is raided by the police. Smith has escaped, but under suspicion, and Raegen on being searched, is found to be in possession of the wallet, but the bills are missing. Being a powerful man, he seizes an opportunity while pretending to plead his innocence, and overthrowing the officer and everyone in his way, dashes out the door of the saloon, hotly pursued by the officers. We see Simth return to his flat in a tumble-down tenement and display the money which he has brought to his old mother and to the little child of the story. The child is hungry and cries for food. Suddenly they hear a noise outside; it is the police! Stopping the child's cries, they put her into a closet, and closing the door, they make their escape by way of the fire escape. The police break in the door, make a hurried search, and finding no one there, disappear. Shortly afterwards we see Raegen darting around the corner, hotly pursued by other police, and entering this same building. Climbing upstairs rapidly, he finds the door open and slips into Smiths' apartment, closing the door after him. Hearing a noise in the closet, he raises a chair to defend himself, when the door opens and the tiny little waif appears. She is quite unconscious of any danger in the supposed bad man and makes friends with him at once, asking him to give her food. Her condition is really pitiable, and Raegen makes a search of the premises, but fails to find anything to give her. He decides to forage outside, but on looking out of the window on the front finds the police on guard on the sidewalk below watching the building. The same state of affairs holds true at the back of the tenement. And then the little child suddenly collapses in a dead faint upon the floor from hunger. This is too much for the heart of Raegen, and picking her up in his arms he goes downstairs, presents himself to the police and invites them to take him to the station, where something can be had for the child to eat. Of course in the meantime Smith has been arrested with the money on his person and Reagen's innocence is proven, and having turned over a new leaf, we see him in the last scene become the foster father of the little waif, who had been abandoned by her grandmother when she fell into the hands of the law.—By Richard Harding Davis. 1,000 feet. Released March 24.

JIM THE MULE BOY.

Jim the Mule Boy, the sole support of his blind father and a mother and small sister, is stopped at the entrance to the mine into which he is driving his car by the small son of the owner of the mine. The lad wants to ride on the car down into the depths of the ground. Jim puts him off laughingly, but while he is attending to his lunch the small boy hides upon the end of the car and, unknown to Jim, becomes a passenger. When Jim discovers him, down in the farthest recesses of the mine, he starts at once to take him back to the surface to his father. Then an explosion occurs, and we see the walls of the shaft fall in, blocking the exit of the boys and practically entombing them. Above ground the father misses his little son, and starting a search, is faced by the same explosion. He summons a rescue party to begin work at once. And then follow the successive scenes as the days and hours slip by; the rescuers working with might and main, with the boys conserving their small suply of food and becoming weak and exhausted when finally it gives out and they are left without food or water. We see the mule eating the straw from his collar and Jim digging a hole in the coal into which a little water seeps, which he gathers in his cap and gives to his small charge, keeping for himself

only what remains in the cap after he has squeezed it as dry as possible. Then the boys abandon hope and the little lad offers up a prayer to the Father above. In the middle of it Jim's practised ear hears a sound in the distance. The blows of a pick resound far off in the earth. When finally the wall of rock is tumbled down and the rescuers' heads appear, the boys are too weak to lift themselves to greet them. But of course they are horne quickly to the surface, and the proprietor rewards Jim not only with a deed for a house and lands and a promise of steady work for himself, but also with a handshake, which honor is probably more dearly prized than the house and lands.—975 feet. Released March 28.

APRIL FOOL.

The entire story is played by children and wonderfully clever little ones at that. It begins with the waking up of the little heroine hy her small tot of a sister, who comes in in her nightie, and after throwing a pillow at her, calls her excitedly to the window and hids her look out. Of course when she looks out there is nothing to be seen there, and April Fool's Day has started. Then we see two very youthful lovers on their way to school. The boy stops at the gate and carries her books for her and when he reaches school, taking from his pocket a small hag of candy, he offers it to her. She takes a large piece and a large bite of the large piece, and then finds that the candy is loaded with vinegar. Of course she proceeds to get even hy puncturing boles in an apple and filling the holes with pepper, but the young man is too smart for her, for he substitutes an apple of his own and apparently eats the peppered one with gusto. Then shifting again, he thrusts upon her the peppered apple and she is caught at her own trick. Of course this is too much for the young lady and she goes home alone, refusing to see him and shutting him out of the front door when he follows her on to the front porch. Being something of a diplomat the young man procures another partner to go to school with him, and our little heroine sees her best man paying attentions to another girl. When he gives her a piece of cake and accepts a buttonhole bouquet, the climax of jealousy is reached. After school, on the way home, the young lady drops her belt into a puddle of water and not wishing to soil her hands, tries to fish it out with a stick. Our small hero comes along and offers his assistance, which is scornfully refused at first, the reason being given that he is wearing a buttonhole bouquet of another young lady. He gallantly tears this off and flings it to the ground and offers his services again. This time they are accepted. Then he decides that he will not get the belt without a kiss. Sitting on an old stile the two youngsters play for this kiss, the girl holding off and the small boy following her. Suddeny they realize that an April shower is coming. The young man runs down the steps of the stile and picks up the umhrella which he has carried. Now the rain begins to pour down in earnest and the little lady asks him to put the umhrella over her hut he still holds off until she gives him the promised kiss. Meantime they are both getting drenched to the skin in a realistic thunder shower, which finally forces the young lady to accede and the kiss is given.—985 feet Released March 29.

BETWEEN TWO FIRES.

In order to save the life of her uncle who has been taken prisoner by the Prussians, Miriam de Lorme is ordered to forward to the German general the plans of the French army, which her chateau overlooks. The inhahitants of the district are ordered to move out of the firing zone, and Miriam realizes that she will not be able to draw the plans and thus save her uncle, if she vacates her chateau. Hitting upon a plan she offers the chateau as a hospital to the French commander, knowing that she will be safe under the protection of the Red Cross flag. She obtains his consent and hoists the flag upon the turret of the chateau. On the commander's staff are several young officers, one of whom, Captain Lepard, sees in Miriam the ideal of his dreams and loses no time in showing his admiration for her. His devotion is not unwelcome to Mirian, who admires the impetuous young Frenchman and their admiration and friendship soon ripen into love. This admiration of Lepard's for Miriam is not shared by his friend and brother officer, Captain Brownell, who, suspecting her ot ulterior motives, decides to keep a close watch upon her movements. As Miriam's love for Lepard grows stronger her resolution to spy upon the French becomes weaker, until anotber appeal from her uncle to save his life spurs her on. To save her uncle she must betray her lover's cause. She hurries to the turret of the chateau and draws a rough outline of the French position. Captain Brownell has not been napping, however; from a distance he has been keeping strict watch upon the chateau, and through his field glasses be sees Miriam drawing the plans. Realizing that there is no time to lose, he starts for the outposts. After a short wait he sees Miriam making her way through the lines and follows her. Just as she meets the messenger who is to escort her to the Prussian camp, Brownell confronts them and makes them both prisoners. Not wishing to humiliate his friend Lepard by bringing his sweetheart before a court martial, he sends for the commander and Lepard and escorts Miriam hack to the chateau. Upon the arrival of Lepard and the commander, Brownell explains the situation. Lepard is overcome by what he thinks is his sweetheart's treachery, hut the commander takes another view of the matter and accuses Lepard of being Miriam's accomplice. Miriam, seeing her lover in danger of losing life and honor, makes a clean breast of everything and hands over the plans to the commander who, when Brownell vouches for the truth of her story. burns the plans and releases Lepard from arrest. Miriam hegs her lover's forgiveness, which he readily grants, and the lovers are happily reunited.—By Roy Norton. 1,000 feet. Released March 31.

PRISCILLA'S APRIL FOOL JOKE.

Biograph

A seasonable and very amusing comedy showing another episode in the romance of Priscilla and Paul. They are now impressed by the maxim that "The course of true love ne'er runs smooth." They are participants in a lawn party, and several of the young people in a spirit of jollity scheme to interfere with their little tete-a-tete which they indulge in shortly after they arrive on the grounds. Paul is sitting with Priscilla on a bench in a secluded spot. Paul is reading to Priscilla, hut she steals away to gather some flowers to surprise him with. Alice and Harry are viewing this from a distance and when Priscilla has gone Alice conceives the idea of taking her place. When Priscilla returns she finds Paul heing fondled by Alice. Ten thousand furies. Another lovers' quarrel ensues. Paul, innocent, tries to explain but Priscilla will not listen. However the truth of the situation is learned and Priscilla is determined to get even, hy turning the laugh on the jokers. Both Paul and Priscilla leave notes in a conspicuous place purporting to their having cast themselves into the sea, leaving their wraps on the shore to apparently verify their act. They are now impressed by another maxim, "He laughs best who laughs last."—686 feet.

CURED.

We heave often heard the afflicted complai nthat "The cure is sometimes worse than the disease." No doubt our gouty friend had this to say when he had passed through the excruciating experience he was subjected to in this story. Our friend is decidedly under the weather from gout and must resort to an invalid roller chair as a means of locomotion. Left alone, a thirst seizes him and leaving his chair he hies himself for a drink. He has hardly departed when Happy Jack enters and decides to take a ride. This proves to be a most exciting trip, bumping into objects and human beings, down a long flight of stairs to the very edge of the wharf facing the sea. Here he finds the owner hobbling close behind him, so he vamps. The invalid finds this point a most attractive one at which to sit and enjoy the cool breezes of the sea, and here he sits. Shortly after those into whom Happy Jack in his peregrinations has run, approach stealthily and thinking the man in the chair is Jack pounce upon him and overboard he goes. With him it is now a case of kill or cure.—308 feet. Released March 27.

THE SPANISH GYPSY.

I we wait long enough Fate is sure to wreck vengeance for any injustice we may suffer, but this you must confess hard logic, especially one of the implusive Latin nature. Hence, it was that Pepita was excessively anxious to avenge herself upon the perfidious Jose for the jilt she suffered. Jose is a handsome troubadour, and when he and Pepita, the pretty Gypsy maiden, meet it is a case of love at first sight. He finally declares his love for her and is accepted as a fiance. They join forces and go to the Grand Plaza, where they sing and dance with great success. Pepita loves her sweethcart with a deep sincere passion seldom found in another but the Latin type of girl. Her life is his, and though she loves with extreme

ardor, she can hate just as intensely. Jose, however, was fickle natured and it needed only a pretty face and trim figure to make him forget the very existence of Pepita and fall deeply in love with the possessor of these qualities. Mariana, coquettish by nature, appreciating this, lures the weak Jose from Pepita for herself, and together they go to the Plaza, Jose all unmindful of Pepita, who waits in the camp for him. Paula, the husybody, seeing Jose and Mariana together on the Plaza hastens to inform Pepita. Wild with jealous rage she goes armed with a dagger to kill Jose and if possible her rival. In this she is thwarted by several bystanders who catch her before the uplifted knife descends. Jose cowardly hastens to a distant camp where he feels he will he safer from Pepita's wrath. Here, however, Fate interlopes, though ethically and, while Jose is examining a pistol he is about to procure with which the hetter to protect himself, the firearm explodes, totally blinding him. In this helpless condition, Mariana cruelly deserts him, for she realizes what a burden he will he if she sticks to him and she is not of the nature to make such a sacrifice. Cast adrift the poor fellow, feeling that he has been justly punished for his perfidy, wanders off to play and sing on the way for a livelihood. Unknowingly he returns to the old neighborhood and while playing on the highway, Paula passes and with her usual spitefulness runs off to inform Pepita of Jose's return to the village. At last, she feels the long delayed vengeance will be wreaked. Rushing madly through the village Pepita espies Jose alone on the road playing and singing. As she approaches with drawn dagger, he holds out his hand appealing for alms, of course not knowing who it is that has approached him. Pepita at once sees his helpless and pitiable condition and pity melts her hatred and her love for him revives. Making herself known to him, he is at once seized with the fear that she is on vengeance bent, and so resigns himself to what seems inevitable. However, she reassures him by taking his hand and kindly leading him to the safety of the camp, declaring that her love for him is fortitude enough for her to sacrifice herself to the care of him throughout his dark and cheerless life.—996 feet. Released March 30.

PRISCILLA AND THE UMBRELLA.

Since the occasion of Paul's winning out over Harry's trick to bring about a quarrel between him and Priscilla and their getting back by playing the April Fool joke of apparent suicide, Paul has had things his own way, but being such a "boob" he certainly does love Priscilla. He calls every evening and besides hringing her a bouquet of flowers has nothing to commend him for he sits like a statue twirling his thumbs. He is about as entertaining as a chill. Still he sticks and no hint or insinuation will induce him to beat a retreat. At last the poor girl is forced to tell him she is tired, and he best be on his way. Before he leaves, however, she gives him a letter to deliver to Harry, his rival, which, although he is loath to do, yet he cannot refuse. He, of course, does not know the tenor of it. The note reads:—"Dear Harry: Paul is a boob and bores me to death. Why don't you call to see me occasionally? Priscilla."

When Harry gets this note he goes post haste to visit the fair Priscilla. Arriving he is effusively received by her, but upon seeing the bouquet of flowers left by Paul is very much incensed as he feels he is now being made a fool of a second time. He becomes almost rude at which Priscilla, while enjoying his exhibition of jealousy, pretends to be highly insulted and orders him out. This he, in spite, refuses to do as she has invited him, and stay he intends doing. She is overjoyed at his exhibition of spirit —so different from Paul's ninny ways. Still she must carry out the game and so goes and gets his hat and umbrella to virtually eject him. An idea strikes her, she will hide his umbrella and in his excitement he is sure to forget it, and so will be forced to return for it. The scheme so far seems to work, for off he goes without his parachute, not before, however, he has discovered her subtle trick. He apparently forgets his property and Priscilla takes it to her room where she decorates it with ribbons. Feeling that Harry has forgotten where he left his umbrella she writes a note to Harry as follows:—"Dear Harry: There is an umbrella here that belongs to either you or Paul." This is enough. He considers this an invitation and so goes. Priscilla's sister learns the nature of Harry's errand and to tease Priscilla dashes into the room with Harry's umbrella still wearing its decorations. There is no further need of a declaration on Priscilla's part; Harry has every reason to believe he is the bright peculiar star in the affections of Priscilla. Harry has scored one over Paul—Released April 3.

THE BROKEN CROSS.

Few there are who doubt the efficacy of prayer, and it surely was through the fervent devout prayers of the little country girl more than fate that protected the unsophisticated country boy, her sweetheart, from he machinations of the designing manicure girl during his stay in the city, wither he had gone to try his fortune. Leaving home for the city he on the day of his departure plights his troth with his little country girl sweetheart. She wears a pearl cross, which she breaks in two, giving him one half as a 'love token, to remind him of his pledge. However, they agree that if either wishes to break off the engagement they will send back their piece of cross. Arriving in the city, he is ensconced in a typical city boarding house; one which is the habitation of cheap theatrical people and their ilk. Among their number is a manicure girl who is much impressed by

the boy the moment she sees him, and she makes up her mind to interest him in her direction. He is not slow to notice the attentions she shows him, and might have taken her seriously were it not for the regular arrival of his sweetheart's letters, and her prayers for his welfare during his sojourn here. These letters induced violent jealousy in the manicure girl, and determined to break his faith in his country girl sweetheart she steals her letter to him, destroying in a measure his confidence in her for this apaprent negligence, and plunging him into the depths of despair. The city girl watches the effect and is quick to tender sympathy. It is through this that she learns the story of the broken cross and their agreement. An idea occurs to her and she at once goes to her room to precipitate her desperate plan. Open the envelope she extracts and destroys the letter and places then in its stead a piece of pearl cross which she has procured and by resealing the envelope places it in the mail rack purporting to come directly from the country girl sweetheart. The reception of this is almost a death blow to the poor boy, and he feels intensely grateful for the apparent sympathy of the manicure girl, until upon placing the pieces of cross together he discovers that they do not match. It at once dawns upon him that this woman perpetrated the despisable act, and so denounces her and hurriedly packs his effects to leave for the country to explain the cause of his not writing to his sweetheart. Arriving back to his native village he at once seeks the girl and the cross is mended never to be broken again. Life in the city does not now appeal to him.—Released April 6.

THE TRUTH ABOUT THE POLE.

North Pole

The first scene shows the members of the "Arctic Trust" engaged in an animated wrangle. The old gentleman in the foreground is busily engaged in examining the northernmost portion of the globe, doubtless to make sure that some one has not stolen the pole while he slept. The gentleman at the 'phone is Commodore Ridgeman, President of the "Arctic Trust," a body which thinks it owns the North Pole. A message is brought in by one of the bell-boys—the President opens and reads—"Cook has started for the Pole; our man should be warned." Signed "Bill Spotem." Consternation prevails—they confer among themselves and decide that they will despatch a message of warning to the commander of the Roosevelt, whom they are backing in this Arctic quest. The President accordingly sits down and writes the message. Feeling that they have done what they could to thwart Cook the conspirators exult.

The box house at Etah is here shown, so-called because it was constructed from the packing boxes which brought Dr. Cook's supplies this far. The doctor is standing at the door. Seated down in the foreground is Franke, Dr. Cook's faithful man. The doctor has decided that all the conditions being favorable, he will start on his dash for the pole. He bids the Esquimos go outside, harness the dogs to the sled and prepare to start. Coming down to Franke he tells him of his purpose. Franke remonstrates with the doctor, fearing that he will not return alive. Dr. Cook tells Franke that he has given the amtter careful thought, and is satisfied that conditions cannot be more favorable. He is going to make the attempt. He tells Franke that he will leave him in charge of the contents of the box house and enjoins him to take good care of the property as, should he return, the stores which the box house contains may be the means of saving his life. This Franke promises to do and after bidding Franke good-bye the doctor departs on his hazardous journey .

The next scene shows the interior of the Roosevelt's cabin, with her Commander at work at his desk. One of the seamen enters bearing the cablegram which we saw written in the previous scene. Angry and dismayed that any one else should have entered what he regards as his special domain, the Commander crushes the telegram and gives vent to language which will not be repeated here.

Five months have elapsed. We return to the box house to find Franke, Dr. Cook's man, ill and desperate. Faithful to his trust Franke has stayed to guard the goods entrusted to him by the doctor till his very life depends upon his getting away and finding aid. He accordingly determines to make the attempt and staggers from the box house for this purpose.

Franke has traveled twenty-five miles and finds himself within hailing distance of the Roosevelt. Placing his hands to his lips he gives vent to one despairing call for help and falls faint to the ice. His cry is heard and the Commander of the Roosevelt, accompanied by two of his seamen, responds to see who has called. They find Franke prone upon the ground and in raising him up a paper falls from his pocket, which is handed the Commander. Reading it, he recognizes an inventory of Dr. Cook's property. Quickly realizing the opportunity which chance has placed in his way to thwart his hated rival, the Commander tells Franke that he will take him aboard the Roosevelt and aid him, provided he make over to him the property which Dr. Cook left in his charge. Franke refuses at first to do this and is informed that if he will not make the transfer of the property he will be left to die. Ill, desperate, helpless, Franke has no choice but to yield to what he regards as an unfair demand and, in order to save his life, complies. He accordingly signs over to the Commander of the Roosevelt all the goods left in his care and is taken aboard the ship, where he is transported south. Upon his arrival at the end of the ship's cruise, Mrs. Cook was called upon to pay a bill of $100.00 for the man's transportation, despite the agreement that he would be transported as shown.

Coming back to the box house, the Commander of the Roosevelt, whom we last saw depriving Franke of the goods entrusted to his care by Dr. Cook, enters to take possession. He is accompanied by Mr. Whitney, a well known sportsman, who went along with the Roosevelt expedition for the purpose of taking advantage of such hunting facilities as the Polar regions afford. Calling his trusty man Murphy to his side, the Commander instructs him to remain within the box house and take good care of its contents, and under no conditions to permit any one to remove a single thing, least of all Dr. Cook. This Murphy faithfully promises to do, and the Commander departs leaving Mr. Murphy in possession of Dr. Cook's property.

This scene shows the faithful replica of what actually transpired at the top of the earth. Dr. Cook is shown in the foreground, lying upon his stomach, making an observation by means of a sextant and artificial horizon which is seen on the ground. The doctor arises and, seating himself upon his sled, proceeds to figure out the observation. The Esquimos in the background are placidly engaged in their usual occupations. The doctor's calculations reveal latitude 90—longitude 0—the North Pole has been reached. Calling his boys to his side Dr. Cook tells them, "Boys, we have reached the big nail." (Dr. Cook furnished the nail—others have furnished the hammers.) The boys express their delight and we find them celebrating as the scene closes.

A little bit of arctic scenery, showing Dr. Cook, accompanied by one of his Esquimos, during a portion of their return journey fro mthe Pole. It was during this stage of his trip that Dr. Cook was subjected to the greatest hardships, being reduced to such traits that he was obliged to eat his boot tops. You will notice that the doctor's head is uncovered, which might seem surprising to the average person having in mind the extremely low temperature which prevails in this region, but the warmth of the fur garments they wear is such that it is customary during the day to travel and walk with the head uncovered.

You will remember that Murphy and Mr. Whitney remained in the box house, and we find them there engaged in conversation. Mr. Whitney is cleaning his gun. A despairing cry is heard from the outside and Whitney suggests to Murphy that they see if they can render aid. Murphy declines to leave the box house, so Mr. Whitney goes out alone and finds Dr. Cook almost overcome by exhaustion. Assisted by one of the other seamen, he brings the doctor into the box house, and they do what they can to revive him. Murphy overhears their conversation and learns that the new arrival is the well hated Dr. Cook, against whom he has been warned. Dr. Cook tells Mr. Whitney of the success of his trip—that the North Pole has been accomplished, and requests him for the present, at least, to keep the information secret. This Whitney agrees to do. Starting toward one of his boxes for the purpose of getitng at its contents, Dr. Cook is intercepted by Murphy, who tells him he will not be permitted to touch anything within the box house. Mr. Whitney remonstrates with the man, Murphy becomes impudent, and Whitney attempts to strike Murphy, but Dr. Cook intercepts them, telling Mr. Whitney that he will not be the cause of a quarrel between them, and realizing the helpless condition in which he is placed he will withdraw peaceably and get south as best he can. He hands Mr. Whitney his sextant and other data, requesting Whitney to see that they are transported safely south, which Mr. Whitney agrees to do, and place them in his trunk for the purpose. The doctor then departs, accompanied by his Eskimos, who apparently do not think much of Mr. Murphy.

Once more we find ourselves in the Commander's cabin on board the Roosevelt. The Commander is standing in the doorway, gazing over the field of ice with his field glasses, probably looking for gold bricks. The seaman whom we have seen down at the box house enters, accompanied by Mr. Whitney and bearing the latter's trunk. Murphy goes to the Commander and informs him of Dr. Cook's return, also of the conversation he overheard between Dr. Cook and Mr. Whitney, and of the further fact that Dr. Cook has entrusted to Mr. Whitney his instruments. The Commander crosses to Mr. Whitney and asks him if it is true that Dr. Cook claims he has reached the North Pole. Mr. Whitney replies he cannot discuss the question with him, and is then asked by the Commander if Dr. Cook has entrusted to him his instruments and data. Mr. Whitney admits

this, and is informed he will not be permitted to retain them on board the Roosevelt. "You must either put them ashore or you will not be allowed to remain upon the ship." Mr. Whitney remonstrates with the Commander for what he regards as his remarkably unfair attitude, but is forced to acquiesce in the latter's demands, and after expressing his opinion goes ashore with the instruments and data, which are left at Etah.

Our old friends of the Arctic Trust are again disclosed in their comfortable sitting room, busily engaged in their usual occupation of chewing the rag. The President of the club enters, greatly excited; he has received word of Cook's return and that he claims to have reached the Pole. Consternation prevails. They feel that all their carefully laid plans of many years will go for naught; that the money they have spent in endeavoring will be credited with the accomplishment of something for which they have to promote the interests of their man will be wasted, and that Dr. Cook worked and longed for many years. The President suggests that if some scheme can be devised whereby Dr. Cook's exploit can be minimized and the doctor generally discredited there still might be a fighting chance of successfully beating him. One of the resourceful members suggests that they locate Barrill, who accompanied Dr. Cook upon his Mt. McKinley climb, and have him make affidavit to the effect that Dr. Cook did not climb Mt. McKinley. The idea impressed the President as being a good one. They all feel that it will tend to divert public attention from his latest achievement and probably discredit him in the eyes of the whole world. The member who just comes in is selected as the one to undertake the nefarious mission. He is informed of their intentions and agrees to go. A time-table is sent for, the first train to Tacoma located, the member hurries to see if the train can be made, and, assuring the other members that he will do or die, takes his departure.

We now find ourselves in the bank at Tacoma, where Barrill, the Mt. McKinley guide, is shown receiving from the member of the Arctic Trust fifteen $100.00 bills, which, together with other considerations, shows the motive which prompted the affidavit he falsely swore to regarding Dr. Cook's Mt. McKinley climb.

Considerable excitement prevails at the headquarters of the Arctic Trust. The two members here shown are anxiously awaiting word from their fellow-conspirator at Coma as to the success of his mission. The President comes in, greatly excited, anxious to know the possibilities of success. A message is brought in and handed to the President, which he opens and greatly to his dismay finds printed on the front page in large letters that Dr. Cook is publicly acclaimed the conquerer of the Pole. Shaking with rage, the President viciously tears the offending paper into litlte bits and sinks helplessly into his chair, forced to acknowledge defeat for the time being.

A PACKAGE OF TROUBLE.

Mrs. Dix, out shopping, accompanies a friend to the bank and forgets a small package on the ledge of the cashier's window. A few minutes later her husband goes to the bank, gets a package of money, lays it down a minute, picks up the package left by his wife and goes home. Mrs. Dix discovers her mistake, goes back to the bank and gets the package left by her husband containing money. When Mr. Dix gets home he hides his package in the grate, and his daughter, Mary, to give him a lesson in the art of carefulness, takes the package, locks it in a box and puts it in the book case. A tramp enters the house and steals the package. The tramp is captured and the package found on him, but the hopes of the family are again dashed when the box's contents proves to be a pair of stockings. While the tramp was being hunted for the servant girl finds the original package among Mrs. Dix's purchases, and puts it in the box, and later in an outburst of grief, Mr. Dix overturns the box and the real valuable package is found.

SHE WAS NOT AFRAID.

Burglar robs neighbor's house. Lady returning from matinee finds room topsy-turvy, and rushes to the next door neighbor and tells of it. Husband enters showing newspaper account of recent burglaries. He sends woman back to her home and leaves to inform police, but on the way he changes his mind and returns to his wife. She has often bragged to him of being perfectly fearless and he decides to put her to the test. The husband disguises as a burglar and uses his pipe for a revolver. He gets the drop on her and compels her to wait upon him, but while he is drinking she discovers the deception and getting a real revolver from a desk nearby turns the tables completely.—Released March 29.

THE MILL OF THE GODS.

Jack Carlton and Stanton Moore, two young tellers in the Greenleaf National Bank, propose to Madaline Gaumont, who pays them a visit at the bank. She finally rejects Moore and accepts Jack. Four years later, Madaline, who has become Jack's wife, again calls at the bank, and Moore, who has been elected president, shows his love for her and is more impatient than ever at the way things have turned out for him regarding Madaline. Jack has in the past four years risen to the position of cashier and is busy in his cage just as his wife decides to go home. He asks Moore permission to see his wife to the door. When Jack has left his cage, Moore, in a fit of jealous rage, steals a package of money which contains $20,000.00, and for which Jack has just signed a receipt for from the U. S. Express Company. Jack reenters his cage after bidding his wife goodbye and finds to his astonishment and dismay that the package of money is missing. He asks Moore if he has seen it, whereupon Moore accuses Jack of its theft. Moore secures from an easily bought official a warrant for Jack's arrest without the usual formalities, but before the warrant can be served, President Moore meets with a fatal auto accident, while enroute to hurry Jack's arrest. Jack arrives home and finds his wife out. He finds a telegram from Moore to the effect that if he does not return the money in question immediately, he will be put under arrest. Jack knowing that there were no witnesses and that it is his word against the president's, realizes that it means State's Prison for a long term. Driven mad by the disgrace he finally decides to end it all, and is about to end his life with a pistol bullet when his wife (who has disguised herself as a burglar to have some fun with her husband) comes upon him just as he is pressing the gun to his head. By a supreme effort she forces the gun from his head. Just as she gains control of the frenzied man the telephone bell rings. It is a message for Jack to hurry to the bedside of the dying president. He reaches the president just in time to hear his confession of his guilt from his own lips, and the picture closes with Jack and Madaline standing by the bedside of the dead banker, asking forgiveness for his sins and for God's mercy on his soul.—Released March 31.

Expressions We Frequently Hear

"Cracking the Emulsion on a Reel."

Among the Picture Theaters

ARKANSAS.

The Joie Theater of Fort Smith, which was damaged by fire some time ago, has been thoroughly restored and improved and reopened to the public.

CALIFORNIA.

It is announced that the New York Motion Picture Company of New York City will at once begin the construction of a $20,000 workshop at Los Angeles, where the company has had a studio for some time.

The Birnbaum Investment Company has just completed the erection of a theater at 314 East Fifth street, Los Angeles, which has been leased by Messrs. Riggs and Lee, who will conduct it as a vaudeville and moving picture house. It will be called The Bell. An electric representation of a bell adorns the front, while there are chimes in the lobby. The house has a seating capacity of 500.

The Dorris Theater at Roseville has been purchased by Messrs. Godfrey and Cox.

COLORADO.

Adolph Koan, manager of the Idle Hour Theater, of Colorado Springs, is preparing to open a theater at Manitou.

The Photo-Play Theater Company of Denver has been incoporated with a capital stock of $25,000. The directors are H. Lloyd Lent, Oliver T. Curtis and R. D. Reeve.

ILLINOIS.

George I. Wiley, owner of the Center Theater, Center and Larrabee streets, Chicago, has just opened the Ravenswood, a handsome new theater at 4525 E. Ravenswood Park. The house has a capacity of 300 and will be devoted exclusively to moving pictures. Mr. Wiley will open another new picture house, The Wiley, about April 1, at 2171 Lincoln avenue.

The Clifton is the name of a new exclusive moving picture theater opened at Wilson avenue and Clifton streets on the 15th inst. by Richard L. Crescy. The house is beautifully decorated and no effort has been spared to provide for the comfort and pleasure of its partons.

The Lyric Theater at Streator has been purchased by August Bossen, of Clinton, Iowa, who is experienced in the moving picture field.

The Dreamland of Bushnell has recently been refurnished and presents a very attractive appearance. The Civic Committee of the Carnegie Club recently gave a series of picture shows, the proceeds of which are to be used for cleaning and beautifying that city.

A deal has been consummated whereby Frank Thielen, of Aurora, owner of the Grand and Star theaters, of Elgin and the Grand theater of Joliet, becomes a partner in a $1,000,000 theater syndicate with L. M. Rubens, of Aurora. The syndicate will control a number of theaters including two in Elgin, two in Aurora and two in Chicago.

The Picto is the name of a new moving picture house opened at Litchfield by the McPherson Brothers, energetic young men who will doubtless make a success of the undertaking. The house will be under the management of G. A. McPherson.

The Lyric is the name of a new moving picture house at Ashland which will be conducted by Messrs. J. H. Wilburn and Dave S. Hexter.

A moving picture theater has been opened in Corzine opera house, Stonington, by Messrs. Weiser and Schuster.

The Northwestern Film and Supply Company, Chicago, has been incorporated with a capital stock of $2,500. The directors of the company are George Apfel, W. W. Mackey and F. C. Evers.

INDIANA.

The Broadway Amusement Company, Indianapolis, has been incorporated with a capital stock of $30,000. The directors are M. J. Dobson, Joseph A. Davidson and O. E. Harlem, all of that city. The company proposes to build a string of five or six moving picture and vaudeville theaters in that city, work to begin at once.

Robert Kidd, proprietor of the Colonial moving picture theater of Brazil, who recently opened another house at Staunton, has sold the same to Tony Williams of that place who will continue to operate it.

The Lyric, Goshen's new moving picture house, was formally opened on the 15th inst., under the management of Messrs. Aubrey and McSherry, of Fort Wayne. The house is one of the handsomest of its kind in the state.

The Family and Globe, moving picture theaters of Covington, have been purchased by L. C. Parker, of Indianapolis.

M. Sitow, who operates a number of moving picture theaters, recently opened the Victoria theater on East Market street, New Albany, which is said to be one of the handsomest and most attractive in that section.

The Berkson Theater Company has been incorporated at Indiana Harbor by Isaac Berkson and others with a capital stock of $3,000 for the purpose of conducting a moving picture and vaudeville theater.

The Star Theater Company of Indianapolis has been incorporated by Harry Platt, Sam D. Smith and J. J. Dawning, with a capital stock of $1,500.

IOWA.

The Casino, 220 South Second street, Clinton, is a late addition to the list of moving picture houses in that city. The new place is under the management of J. Johansen and Company and has a seating capacity of 200. The house has been beautifully and artistically decorated and presents a very pleasing and attractive appearance.

The Orpheum Theater of Shenandoah, formerly operated by B. F. Hayes, has been purchased by Messrs. O. L. Baker and J. W. Hensley, who understand the business and propose to make their new venture a success.

The Majestic Theater of Cedar Falls has been purchased by Charles O'Connell and others.

The Jewell Theater of Waterloo recently sustained a $500 damage from fire.

KANSAS.

A moving picture theater has been opened at Belleville by J. E. Linnet of Lincoln, Neb.

The Wonderland Theater of Cottonwood Falls, formerly operated by P. H. Tallman, has been purchased by Harry Grogan, who will conduct an up-to-date house and make every effort to please his patrons.

MARYLAND.

The Loritz Brothers will erect a moving picture theater at 1728 to 1734 Harford avenue, Baltimore, and a second one will be erected on North avenue, between Aisquith and Ensor streets, by Messrs. Rush and Deruff.

MASSACHUSETTS.

The Merrimack Square Theater Company of Boston has been incorporated with a capital stock of $50,000. The incorporators are William D. Bradstreet, William D. Bradstreet, Jr., C. Edwin Jennings and Frederick E. Jennings.

The Comique Theater of Malden, formerly operated by Frank H. Wotten, has been purchased by Messrs. Chester Johnson and Kenneth Moran, of Brockton, who will maintain the present high standard.

NEBRASKA.

The Jewel Theater at Grand Island has been purchased by A. Armstrong of North Platte.

Ward Green who formerly conducted a moving picture theater at Seward, will open a new house in that place.

Wm. Alderson has opened a moving picture theater in the Hein opera house at Madison.

Oakland is to have a first-class moving picture theater which will be conducted by Messrs. Bert and Roy Hendricks, of Omaha. The house has been thoroughly fitted up with all modern equipment and no pains will be spared to provide for the comfort and pleasures of its patrons.

NEW JERSEY.

Herman Rosenblatt, who operates the Savoy, a moving picture theater at Trenton, will erect a new house at a cost of $10,000, which will have a seating capacity of 1,200.

The Star Theater is the name of a high grade moving picture house recently opened at New Brunswick.

NEW YORK

The Old Theatorium of Waverly has been purchased by Lewis K. Bowers who will convert it into a moving picture house.

The Wonderland Motion Picture Palace of Courtland has been purchased by Messrs. Fred Tanner and George Ripley.

NORTH CAROLINA.

Messrs. Brawley and Lattimore have opened a moving picture theater at Shelby.

Messrs. Brawley and Lattimore will open a moving picture theater at Shelby.

SOUTH DAKOTA.

E. E. Gaylor, who for a time conducted the Scenic moving picture theater at Bryant, will open a moving picture house at Dell Rapids.

C. D. Adams has sold the Olympic theater at Sioux Falls to E. G. Smith and F. G. Sheratt of Huron, who will discontinue the vaudeville feature of the house and will conduct it as a first-class moving picture house.

TENNESSEE.

The Boswell Film and Amusement Company of Memphis has been incorporated with a capital stock of $25,000. The incorporators are D. E. Boswell, E. M. Boswell, Ralph Slocum, M. S. Rees and William P. Taylor. The company is organized for amusement purposes and to manufacture motion picture films.

VERMONT.

The Union Hall Picture Theater, of Bellows Falls, formerly owned by James Pickett, has been purchased by the Rosenberg Theater and Amusement Company.

WASHINGTON.

The Scenic Theater, of Tacoma, recently gave the proceeds of one day as a benefit for the Children's Industrial home of that city. During the day some 6,000 persons attended the theater.

A new moving picture theater will soon be opened at Wenatchee by W. T. Rarey. The house will have a seating capacity of 400.

WISCONSIN.

A. A. Schiffer has leased the Crystal theater at Menasha and will open a moving picture theater.

A $90,000 vaudeville theater will be erected at Madison which will be ready to open to the public about August 15. Marcus Heinman, manager of the Fuller opera house, is promoting the enterprise. The new house will be known as the Orpheum.

We are informed by A. N. Wolff, general manager of the Gem theater, of River Falls, that we were in error when we stated in a recent number of The Nickelodeon that the Gem theater had been reopened by C. P. Andrews and A. N. Wolff, as the theater had not been closed and also that there is no one connected with Mr. Wolff. We are always glad to make corrections when we are misinformed.

The Majestic Theater, of Appleton, one of the largest in the state, has been purchased by Messrs. W. E. McCann and H. B. Sands, who will conduct it as a high grade moving picture and vaudeville house.

Record of Current Films

Believing the classification of film pictures by the nature of their subjects to be of greater importance to the exhibitor than classification by maker, The Nickelodeon has adopted this style in listing current films. Exhibitors are urged to make use of this convenient tabulation in making up their programs. Films will be listed as long in advance of their release dates as possible. Film manufacturers are requested to send us their bulletins as early as possible. Reasonable care is used, and the publishers cannot be responsible for errors.

LICENSED

Date.	Title.	Maker.	Length.
	DRAMA		
2-27	The Lily of the Tenements	Biograph	996
2-27	The Eye of Conscience	Selig	1,000
2-28	The Iron Master	Edison	
3-1	Sailor Jack's Reformation	Kalem	1,005
3-1	Comrades	Eclipse	638
3-2	The Heart of a Savage	Biograph	991
3-2	In the Hot Lands	Melies	980
3-2	The Outbreak	Selig	1,000
3-3	The Writing on the Blotter	Edison	
3-3	Mexican Filibusters	Kalem	1,005
3-3	Bertha's Mission	Vitagraph	..
3-3	Satan Defeated	Pathé	750
3-4	On the Desert's Edge	Essanay	1,000
3-4	The Tramp's Find	Gaumont	620
3-4	Jealousy Foiled	Pathé	1,000
3-4	Mammy's Ghost	Vitagraph	
3-6	A Decree of Destiny	Biograph	995
3-6	Vanity and Its Cure	Lubin	1,000
3-6	The Little Shepherdess	Selig	700
3-7	The Little Drudge	Essanay	1,000
3-7	Love and the Stock Market	Edison	1,000
3-7	The Wild Cat Well	Vitagraph	
3-8	The Old Family Bible	Edison	300
3-8	Red Deer's Devotion	Pathé	1,000
3-8	The Fury of a Woman Scorned	Eclipse	720
3-9	Conscience	Biograph	995
3-9	The Medallion	Selig	1,000
3-9	The Snake in the Grass	Melies	980
3-10	How Bella Was Won	Edison	1,000
3-10	The Mission Carrier	Kalem	1,000
3-10	Undying Love	Pathé	720
3-11	His First Sweetheart	Gaumont	560
3-11	A Lonely Little Girl	Pathé	1,000
3-11	Red Eagle	Vitagraph	
3-13	The Code of Honor	Selig	1,000
3-14	All For the Love of a Lady	Edison	990
3-14	The Sword and the Cross	Gaumont	840
3-15	The Department Store	Edison	625
3-15	Redemption	Eclipse	508
3-16	Was He a Coward?	Biograph	994
3-16	The Schoolmarm of Coyote County	Melies	980
3-16	The Man From the East	Selig	1,000
3-17	The Wedding Bell	Edison	1,000
3-17	A War-Time Escape	Kalem	980
3-17	The Aching Void	Vitagraph	
3-17	The Inventor's Rights	Pathé	784
3-18	The Faithful Indian	Essanay	1,000
3-18	The Privateer's Treasure	Gaumont	860
3-18	The Sheriff's Daughter	Pathé	1,000
3-21	The Test of Love	Edison	
3-21	The Lieutenant's Wild Ride	Gaumont	1,002
3-21	Though the Seas Divide	Vitagraph	
3-22	A Sawmill Hero	Kalem	960
3-22	The Cattle Rustlers	Pathé	
3-22	The Money Lender	Eclipse	688
3-23	The Lonedale Operator	Biograph	998
3-23	The Way of the Transgressor	Selig	1,000
3-24	The Disreputable Mr. Reagan	Edison	
3-24	Rescued from the Desert	Kalem	990
3-24	Love Proves Stronger than Duty	Pathé	
3-24	The Lieutenant's Love	Pathé	1,000
3-25	Cupid's Conquest	Gaumont	595
3-25	The Renegade of the Ranch	Pathé	
3-25	A Little Lad in Dixie	Vitagraph	
3-25	A Thwarted Vengeance	Essanay	1,000
3-26	The Kid from Arizona	Pathé	960
3-27	Her Child's Honor	Lubin	1,000
3-27	Love in Madrid	Pathé	
3-27	Her Adopted Fathers	Selig	1,000
3-28	Jim the Mule Boy	Edison	975
3-28	His Image in the Water	Gaumont	575
3-29	The Lass Who Couldn't Forget	Kalem	960
3-30	The Spanish Gypsy	Biograph	996
3-30	The Warrant for Red Rube	Melies	1,000
3-30	1861	Selig	1,000
3-31	Between Two Fires	Edison	1,000
3-31	Athaliah	Pathé	
3-31	The Hero Track Walker	Kalem	950
3-31	The Inherited Taint	Vitagraph	
4-1	The Secret of the Forest	Gaumont	625
4-1	Their Mother	Pathé	
4-1	A Republican Marriage	Vitagraph	
	COMEDY		
2-27	Nan's Diplomacy	Lubin	1.000
2-27	Max Makes Music	Pathé	403
2-27	Pots, Pans and Poetry	Pathé	531
2-28	Taming a Tyrant	Essanay	1,000
2-28	Matrimonial Epidemic	Gaumont	813
2-28	Captain Barnacle's Courtship	Vitagraph	
3-1	Rival Candidates	Edison	
3-1	Oh, You Clubman!	Pathé	1,000
3-2	Father's Birthday Ring	Lubin	700
3-2	Woman's Curiosity	Lubin	300
3-4	Forbidden Cigarettes	Gaumont	335
3-6	Max Embarrassed	Pathé	600
3-6	An Oriental Abduction	Selig	300
3-6	After the Boxing Bout	Pathé	375
3-7	The Barber's Daughter	Gaumont	505
3-7	The Ambitious Bootblack	Gaumont	450
3-8	A Night of Terror	Edison	700
3-8	The Irish Honeymoon	Kalem	950
3-9	His Friend the Burglar	Lubin	1,000
3-10	The Bridegroom's Dilemma	Vitagraph	
3-11	The Romance on "Bar O"	Essanay	1,000
3-13	Max's Feet Are Pinched	Pathé	489
3-13	Whiffles' Courtship	Pathé	500
3-13	Comrades	Biograph	998
3-13	The Actress and the Singer	Lubin	1,000
3-14	Oh, You Teacher	Essanay	1,000
3-14	Betty Becomes a Maid	Vitagraph	
3-15	Baby's Fall	Edison	375
3-15	The Hunter's Dream	Kalem	365
3-15	Oh, You Kids!	Pathé	690
3-16	Mandy's Social Whirl	Lubin	1,000
3-18	Davy Jones, or His Wife's Husband	Vitagraph	
3-20	Teaching Dad to Like Her	Biograph	995
3-20	Her Artistic Temperament	Lubin	1,000
3-20	Max Is Stuck Up	Pathé	
3-20	How Tommy's Wit Worked	Pathé	
3-20	Her Words Came True	Selig	1,000
3-21	Hans' Millions	Essanay	1,000
3-22	Who Gets the Order	Edison	
3-23	Bridget and the Egg	Lubin	500
3-23	The Spinster's Legacy	Lubin	500
3-24	The Widow Visits Sprigtown	Vitagraph	
3-27	Priscilla's April Fool Joke	Biograph	686
3-27	Cured	Biograph	308
3-28	Getting His Own Back	Essanay	600
3-28	Lost, a Baby	Essanay	400
3-28	Family Troubles	Gaumont	430
3-28	Billy's Valentine	Vitagraph	
3-29	April Fool	Edison	985
3-29	A Fatal Resemblance	Pathé	
3-30	When Women Strike	Lubin	
4-1	Tribulations of Jiggers	Gaumont	375
	SCENIC		
3-1	Beauties of San Souci	Eclipse	362
3-3	Around Constantina, Algeria	Pathé	200
3-8	The Beautiful Wye Valley	Eclipse	300
3-11	The Beautiful Gorges of Tarn	Gaumont	415
3-10	Regatta Along the Mekong River	Pathé	220
3-14	Breakers In the Clouds	Gaumont	155
3-15	The Thames From Richmond to Oxford	Eclipse	472
3-18	Rocky Caves of France	Gaumont	110
3-22	Nemours and the Banks of the River Loing	Eclipse	320
3-25	The People of the Arabian Desert	Gaumont	405
3-27	S. S. Lusitania Entering New York	Pathé	
3-29	Dr. Charcot's Trip Toward the South Pole	Eclipse	478
3-29	The Cormorants, or Japanese Bird Fishing	Eclipse	528
	INDUSTRIAL		
3-15	The Diver	Kalem	565
3-17	Pepper Industry in the Malay Peninsula	Pathé	190
3-24	Native Industries in Cochin, China	Pathé	
	SPORTS		
2-28	Lafont and Pola's Last Flight	Gaumont	185
	ACROBATIC		
3-15	The Paoli Brothers	Pathé	295

DAILY LICENSED RELEASES.

MONDAY: Biograph, Lubin, Pathé, Selig.

TUESDAY: Edison, Essanay, Gaumont—Kleine, Vitagraph.

WEDNESDAY: Edison, Kalem, Eclipse—Kleine, Pathé.

THURSDAY: Biograph, Lubin, Melies, Selig.

FRIDAY: Edison, Kalem, Pathé, Vitagraph.

SATURDAY: Essanay, Gaumont—Kleine, Pathé, Vitagraph.

INDEPENDENT

Date.	Title.	Maker.	Length.
	DRAMA.		
2-27	The Sheriff's Sweetheart	American	800
2-27	Punch	Eclair	595
2-27	All for Gold	Yankee	
2-27	A Manly Man	Imp	1,000
2-28	The Call of the Heart	Powers	950
2-28	The Little Mother	Thanhouser	
2-28	A Warrior's Faith	Bison	900
3-1	A Western Girl's Choice	Champion	950
3-1	The Trump Card	Reliance	900
3-1	The Professor's Romance	Nestor	990
3-1	The Trump Card	Reliance	900
3-2	Nina's Doll	Itala	900
3-2	College Chums	American	975
3-3	Stage Struck	Thanhouser	
3-3	Owanee's Great Love	Bison	900
3-3	Jack's Lucky Horseshoe	Lux	530
3-4	From the Valley of Shadows	Reliance	900
3-4	Home Sweet Home	Powers	950
3-4	The Rival Servants	Great Northern	
3-6	Memories	American	375
3-6	King Phillip and the Templars	Eclair	975
3-6	Tracked	Imp	1,000
3-6	Angel of the Bowery	Lux	
3-7	The Mummy	Thanhouser	
3-7	Dick Farrell's Prize	Bison	900
3-8	In the Commissioned Ranks	Nestor	
3-8	A Trick of Fortune	Reliance	900
3-8	Out of the Arctic	Solax	
3-8	The Vindication of John	Champion	950
3-8	Prisoner of Caucasus	Ambrosio	900
3-9	The Rich and the Poor	American	1,000
3-9	The Message in the Bottle	Imp	1,000
3-9	Nobility	Itala	900
3-9	The Fall of a Knight	Rex	958
3-10	The Senorita's Sacrifice	Lux	
3-10	The Spirit Hand	Thanhouser	1,000
3-10	Her Prisoner	Bison	900
3-11	The Son of the Executioner	Great Northern	
3-11	Ever the Accuser	Reliance	900
3-11	A Gamble With Love	Powers	
3-13	The Secret of the Palm	Imp	1,000
3-13	The Test of Love	Yankee	
3-13	The Penalty	American	975
3-14	His Younger Brother	Thanhouser	
3-14	Starlight, the Squaw	Bison	900
3-14	Come Back to Erin	Powers	
3-15	Come Unto Me	Reliance	900
3-15	The Girl and the Oath	Champion	950
3-15	Was It Worth While?	Nestor	1,000
3-15	A Coward	Ambrosio	500
3-16	The Fisher Maid	Imp	1,000
3-16	Where the Shamrock Grows	Rex	950
3-16	A Dog and Two Mistresses	Itala	900
3-17	Robert Emmet	Thanhouser	
3-17	His Double Treasure	Yankee	
3-17	The Sacrifice of Silver Cloud	Bison	900
3-17	The Hindoo Prince	Solax	
3-18	His Mind's Tragedy	Powers	
3-18	Between Love and Duty	Great Northern	
3-18	At Swords' Points	Reliance	900
3-20	Cain	Eclair	790
3-20	In Old Madrid	Imp	1,000
3-20	The Open Gate	Yankee	950
3-21	Divorce	Thanhouser	
3-22	The Pay Roll	Champion	950
3-22	When the Red Turned Gray	Reliance	900
3-23	The Penniless Prince	Imp	1,000
3-24	The Tramp	Thanhouser	
3-24	Love's Ebb and Flood	Yankee	945
3-25	Ogallalah	Powers	
3-21	Was He Justified	Bison	900
3-23	Five Hours	Rex	
3-24	Cowboy Friendship	Lux	636
3-24	Out of the Depths	Solax	
3-24	The Cowboy's Waif	Bison	900
3-25	If It Ever Were Thus	Reliance	900
3-25	Queen of the Sea	Itala	500
3-27	The Talisman	American	985
3-27	Sweet Memories	Imp	1,000
3-27	Tom and Jerry	Yankee	
3-28	An Indian Nemesis	Bison	900
3-28	A Western Ruse	Powers	
3-28	The Impostor	Thanhouser	1,000
3-29	The Truth	Nestor	969
3-29	Pallid Hues in Clouded Skies	Reliance	900
3-30	Two Girls	American	723
3-30	So Shall Ye Reap	Imp	1,000
3-31	The Red Avenger	Bison	900
3-31	Silas Marner	Thanhouser	1,000
3-31	Her Mother's Fiance	Yankee	
3-31	The Mill of the Gods	Solax	
4-1	Till Death Do Us Part	Reliance	900
	COMEDY		
2-27	The Silence System	American	200
2-27	Beware of the Bomb	Eclair	370
3-1	Tweedledum, Aviator	Ambrosio	900
3-2	By the Light of the Moon	Rex	900
3-2	The Dynamiters	Imp	500
3-3	A Costly Pledge	Solax	
3-3	The Abandon of Parson Jones	Yankee	
3-3	On Their Honeymoon	Lux	400
3-4	Coto and the Flag	Itala	500
3-4	Foolshead, More Than Usual	Itala	500
3-6	Hypnotizing a Hypnotist	American	615
3-7	When Masons Meet	Powers	
3-7	The Bandit's Surprise	Powers	
3-10	Bill In Love Again	Lux	432
3-10	Jones' Remedy	Lux	524
3-10	Put Out	Solax	
3-11	A Gamble With Love	Powers	
3-11	Foolshead Shooting	Itala	900
3-13	An Unforseen Introduction	Eclair	500
3-13	A Day of Storms	Eclair	400
3-15	Adventures of a Countryman in Town	Ambrosio	500
3-15	A Midnight Visitor	Solax	
3-16	The Job and the Girl	American	600
3-16	Do You Know This Woman?	American	370
3-17	Dogs Not Admitted	Lux	534
3-17	Bill Has Kleptomania	Lux	380
3-18	Toto on the Stage	Itala	500
3-18	Foolshead in Soiree	Itala	500
3-20	The Field of Honor	American	985
3-21	Waiting at the Church	Thanhouser	
3-21	Just Kids	Powers	
3-22	Could you Blame Him?	Nestor	
3-22	Cupid's Victory	Solax	
3-22	Tweedledum's April Fool Joke	Ambrosio	900
3-23	The Harem Skirt	American	930
3-23	Waiting for the Midnight Express	Itala	900
3-24	Edith Has Some Sport	Lux	322
3-25	The Fakir's New Servant	Great Northern	
3-25	Troubles of a Trip	Great Northern	
3-25	Toto Wants to Get Thinner	Itala	500
3-27	Hurrah! Hurrah! Let Us Marry	Eclair	975
3-28	The Pantaloon Skirt	Powers	
3-29	The Bachelor's Old Maid	Champion	950
3-29	A Package of Trouble	Solax	
3-29	She Was Not Afraid	Solax	
3-30	Osteopathy	American	277
4-1	Foolshead Goes to See a Cockfight	Itala	900
4-1	Cupid's Monkey Wrench	Powers	
	SCENIC.		
3-2	Army Maneuvers in Cuba	Imp	500
3-18	Life and People South of the Equator	Great Northern	
3-20	The Rock Climbers	Eclair	195
3-21	A Trip About Christiania	Powers	
3-29	A Glimpse of Neapolitan Camorra	Ambrosio	900
	SPORTS		
3-10	Caribou Hunting	Solax	

DAILY INDEPENDENT RELEASES

MONDAY: American, Eclair, Imp, Yankee.

TUESDAY: Bison, Powers, Thanhouser.

WEDNESDAY: Ambrosio, Champion, Nestor, Reliance.

THURSDAY: American, Imp, Itala, Rex.

FRIDAY: Bison, Lux, Solax, Thanhouser, Yankee.

SATURDAY: Great Northern, Itala, Powers, Reliance.

NOT A MEMBER OF THE SALES COMPANY

Address All Communications to Us Direct

GNOME MOTION PICTURE COMPANY

S. W. Corner Park and Tremont Aves.

NEW YORK CITY

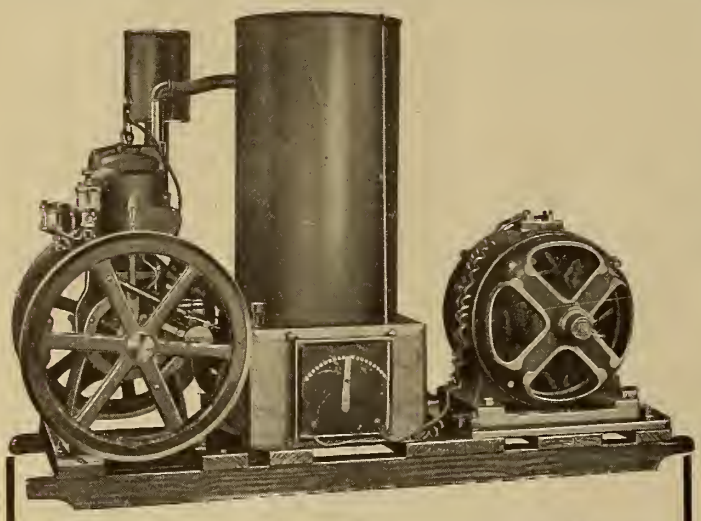

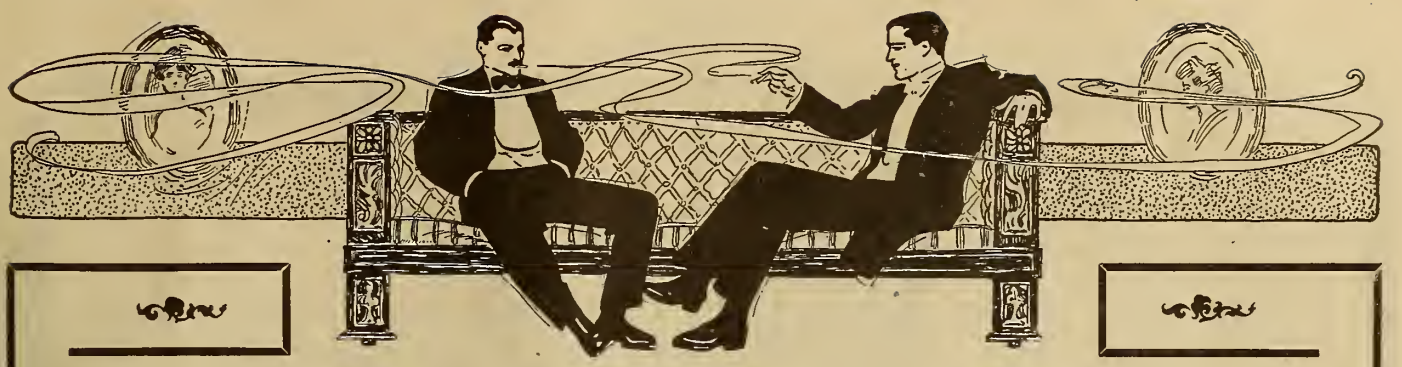

Between You and Me

The subscription price of The Nickelodeon will be advanced July 1, 1911, to $3.00 per annum. This notice, far in advance, is given in order that old and new subscribers may take advantage of the present price of $2.00 per annum. There will be issued 1,000 more pages this year than last and the increase in the subscription price will therefore be justified.

You should have a copy of the book "The Motion Picture—Its Making and Its Theater," which I am authorized to give free with a year's subscription to THE NICKELODEON—America's best picture theater magazine.

During 1909, THE NICKELODEON was issued monthly at $2.00 a year. We gave this book as a premium to induce subscriptions. During 1910 THE NICKELODEON was issued semi-monthly. We now issue THE NICKELODEON weekly, giving subscribers 300% more value without increase in cost. and still give the book as a premium.

THE NICKELODEON represents the motion picture industry in a manner which has made the publication successful ever since the first edition appeared. It is offering the best instructive literature for the proprietors of the picture show and the operators of projecting machines. Subscribe now at $2.00, paying as far in advance at this rate as you choose, for THE NICKELODEON has "come to stay."

This Special Subscription Proposition is intended for quick acceptance. Please let me have *your* order. Tear out this page, write your name and address on the margin, pin $2.00 to it and send it to me. The book will be forwarded prepaid by return mail. THE NICKELODEON will be mailed to you for a year. For description of "The Motion Picture—Its Making and Its Theater" see advertisement on another page, this issue.

H. A. DOWNEY

Subscription Manager, The Nickelodeon

MONADNOCK BUILDING

CHICAGO, ILL.

What Subscribers Say:

A friend of mine, brother operator, has just sent me a copy of The Nickelodeon, and I am so delighted with it that I want you to send me all the back numbers you can possibly secure, for which I have inclosed sufficient to cover.—*Richard Thompson, Empire Theater, Honolulu, T. H.*

Inclosed find check for $2.00 for one year's subscription to The Nickelodeon, with book, "The Motion Picture—Its Making and Its Theater." I am sending my subscription because even the cursory perusal I have been able to give The Nickelodeon has impressed me with its worth and practical value and interest. In my opinion the motion picture business is yet in its infancy and it is destined even long before many will wake up to the fact to take its place beside the regular drama as an established institution in American amusement enterprises; and a publication like yours may be made a valuable factor in promoting this condition. You are helping to raise the "Picture Show" above the plane of cheap inferiority and ephemeral popularity.—*H. I. Dillenback, Nelson Theater, Springfield, Mass.*

Received your sample copy of The Nickelodeon and wish to thank you for the same. It is certainly a dandy and we take pleasure in adding our name to your subscription list. Your magazine covers all subjects that proprietors and managers of five-cent theaters are interested in and should not go unrewarded.—*Wall & Brown, Vaudeville Theater, Lansing, Mich.*

In the first place we want to subscribe for your paper. Kindly send it to us for one year. We have very carefully examined the copy you sent us and find plenty of information in it.—*Maxwell Silver, for F. A. Mills, New York, N. Y.*

Enclosed find $2.00 for our subscription for one year. You certainly deserve credit for the manner in which you are handling the film question and I predict a great success for The Nickelodeon, as a publication of this kind was very badly needed in general.—*A. J. Gilligham, President, F. S. A., Detroit, Mich.*

We are greatly obliged to you for your notice of our cinematograph apparatus, in the November issue of The Nickelodeon. Every mail brings us inquiries from the U. S. A. and as soon as we can arrange for a representative in your country we shall strongly recommend you as the best medium for an advertisement. We enclose our subscription for one year.—*A. J. Williamson, Williamson & Dressler Co., Ltd., London, Eng.*

A Business Record for Picture Exhibitors

The accompanying facsimile reduction shows a page from Pyle's Business Record for moving picture and vaudeville theatres. The book contains 104 large pages of ledger paper, sufficient for two years' business.

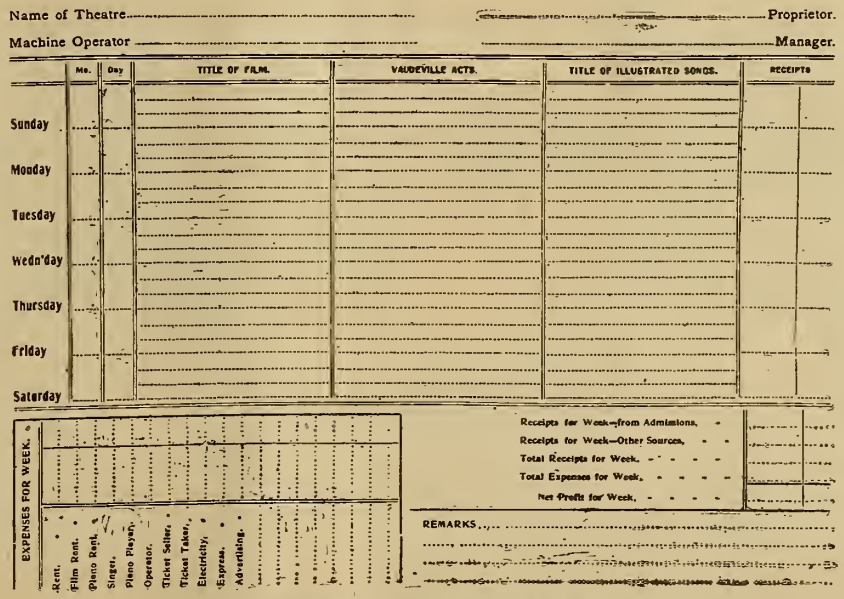

Each page is 9x12 inches, bound substantially and handsomely in blue cloth. We will send it prepaid to NICKELODEON subscribers upon receipt of $1.50.

ADDRESS ALL ORDERS TO

ELECTRICITY MAGAZINE CORPORATION

Monadnock Building, CHICAGO, ILLINOIS

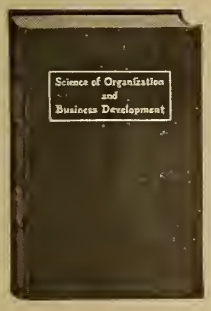

WRITTEN FOR THE BUSINESS MAN

Don't undertake to secure financial assistance, incorporate a projected enterprise, sell or reorganize an established business or finance a deserving concern, until you have read "Science of Organization and Business Development," by Robert J. Frank of the Chicago Bar. The Law and Procedure of Organization, Financing and Development of Business corporations in one book. Write today and get a copy for your desk or library. $2.75 in morocco prepaid, or $3.75 with a year's subscription to **The Nickelodeon.**
ELECTRICITY MAGAZINE CORP., Monadnock Bldg., Chicago

ASK HULFISH

He knows the game. Machine operating, theater operating, film manufacturing and patents. No charge to answer your first questions

DAVID S. HULFISH, 1460 Monadnock Block, Chicago, Illinois

The Bioscope

The Leading Journal of the Moving Picture Business in Europe. Has the largest circulation and is the best Advertising Medium, bar none.

SUBSCRIPTION, $2.00 A YEAR. SAMPLE COPY MAILED FREE.

85 Shaftesbury Avenue, - London, W., England

We Back This Book

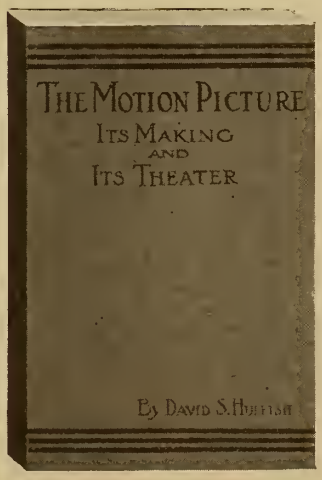

With the broad guarantee that it is the best value for picture theater owners and projecting machine operators that has ever been offered at any price. To Nickelodeon Subscribers its price is

50c in Paper Covers and **$1.00** in Cloth Covers.

The book contains 150 pages—no advertisements. We give it away with a year's subscription to the NICKELODEON.

Send us **$2.00** and ask for the Book.
We'll start it to you by next mail.

Electricity Magazine Corporation
Monadnock Building
CHICAGO - - - ILLINOIS

CLASSIFIED ADVERTISING

Rates for advertising under this heading, 17½ cents per line. Minimum charge, $1.00. No limit to number of lines.

FOR SALE.

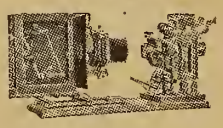

FOR SALE—1,000-feet reels of film, $5 to $25 per reel; Edison, Powers, Lubin new machines, $100; sprockets for any machine, $1.50. For Rent—1,000-feet reels film, $1 and $2 per reel per week. Will buy, Passion Play, film, machines, gas outfits. H. Davis, Watertown, Wis.

FOR SALE—Combined theater and nickelodeon doing fine business. Good stage, scenery and curtains. Private electric light plant, central location. Ask further particulars. John Harbine, Jr., Xenia, Ohio.

WANTED.

WANTED—TRAVELING SALESMEN, handling supplies or bookings for theaters and moving picture shows in each state of the Union, will do well to consider as a side line the introduction of a necessity for these houses. The business will not, in any way, interfere with present lines. All applications will be treated as confidential. Address, 461 Electric Bldg., Cleveland, Ohio.

WANTED — Russo-Japanese War Films, all I can get. Must be in good condition. K. Harima, 5-14 Beach Road, Singapore.

WANTED—To act as the sole agent for cinematograph companies in Singapore, Penang, Malacca and the Federated Malay States. K. Harima, 5-13, 5-14 Beach Road, Singapore. Telegraphic address: Harima. Branches in Penang, Malacca, Federated Malay States and the Dutch East Indies.

CLASSIFIED ADVERTISING

Rates for advertising under this heading, 17½ cents per line. Minimum charge, $1.00. No limit to number of lines.

FOR SALE.

WE want you to send us a two dollar bill for a year's subscription to The Nickelodeon. If you will do this right now, we will send you, in addition to the 52 magazines, a free copy of "The Motion Picture—Its Making and Its Theater." Electricity Magazine Corporation, Monadnock Bldg., Chicago, Ill.

CONTINENTAL Feature Films for Sale—All best makers subjects — Pathé, Gaumont, Urban, Italia, Ambrosia, etc., seven weeks after release, at 3 cents per foot. Condition good as new. 200,000 feet at 1 cent. Smoking concert subjects. Best novelties bought on small commissions. Write for lists. Baer & Co., Continental Film Exchange, 25 Dearborn street, London, W. C., England.

FOR SALE—Vaudeville Theater now running pictures — open Sundays. Address Box 188, Hamilton, Ohio.

FOR SALE—Films showing views of the Straights, Settlements and class educational subjects taken by our own operators and made in our own factory. Correspondence invited. K. Harima, 5-14 Beach Road, Singapore.

TWO attractive modern moving picture theaters for sale in Seattle, Wash., good leases, best location in city, and the very finest equipment. Will sell both to one party or each one separate. Price on one theater $12,000, requires $5,000 cash; balance on time. The other theater $8,000, requires $4,000 cash; balance on time. Reason for sale is, owner has other interests and wishes to leave the city. Address P. O. Box 347, Seattle, Wash.

FOR RENT.

FOR RENT—Building, 25x100 ft, for moving picture theater. Positively best location on northwest side of Chicago. Inquire, 1256 Milwaukee Ave., Chicago.

CLASSIFIED INDEX

Automatic Pianos.
Peerless Piano Player Co.

Books.
Electricity Magazine Corporation.

Carbons.
Kiewert Co., Charles L.

Dynamos.
Detroit Engine Works.
Strelinger Co., Chas. A.

Easels.
McKenna Bros. Brass Co.

Film Brokers.
U. S. Film Brokers & Importers.

Film Exchanges.
Cline, Eugene.
Leammle Film Service.

Film Importers.
Pathé Fréres.
M. S. Film Brokers and Importers.

Film Manufacturers.
American Film Mfg. Co.
Biograph Co.
Edison Mfg. Co.
Essanay Film Mfg. Co.
Gnome Motion Picture Co.
Horsley, David.
Lubin Mfg. Co.
Pathé Fréres.
Solax Co.
Vitagraph Co. of America.

Gas Engines.
Detroit Engine Works.
Strelinger Co., Chas. A.

Grilles.
McKenna Bros. Brass Co.

CLASSIFIED INDEX

Lighting Plants
Detroit Engine Works.
Strelinger Co., Chas. A.

Manufacturing Opticians.
Enterprise Optical Mfg. Co.

Musical Instruments.
Peerless Piano Player Co.

Opera Chairs.
Hardesty Mfg. Co., The.
Heywood Bros. & Wakefield Co.

Patent Attorneys.
Hulfish, David S.

Projecting Machines.
Edison Mfg. Co.
Enterprise Optical Mfg. Co.
Lubin Mfg. Co.
Pathé Fréres.
Power Co., Nicholas.

Railings.
McKenna Bros. Brass Co.

Reels.
Edison Mfg. Co.

Seating.
Hardesty Mfg. Co., The.
Heywood Bros. & Wakefield Co.

Second-Hand Films.
U. S. Film Brokers & Importers.

Supplies.
Cline, Eugene.
Edison Mfg. Co.
Enterprise Optical Mfg. Co.
Leammle Film Service.
Champion Film Co.
Pathé Fréres.
U. S. Film Brokers & Importers.

PATHÉ FRÈRES FILMS

TRADE MARK

Release of January 11

The Twin Cinderellas

One of those comedies with a good plot

Release of January 14

The Battle at Redwood

Indians and Soldiers always please the public

Release of January 18

Trailed by an Indian

A western picture full of excitement

Release of January 21

The Marked Dollar

Some great western settings and a good story

Colored Film D'Art

IL TROVATORE

To be Released January 27th

One of the greatest films ever yet seen. No show will be complete that does not run this with the piano score from Verdi's opera arranged to fit scene for scene with the picture. Only to be obtained from your exchange, 26 pages for 50c.