DECLASSIFIED E.O. 12065 SECTION 3-402/NNDG NO. 775013

GHQ/SCAP Records (RG 331, National Archives and Records Service)

Description of contents

(1) Box no. 3072

(2) Folder title/number: (6)
Science

(3) Date: Apr. 1947 - May 1948

(4) Subject:

Classification	Type of record
9811, 9850	c, e

(5) Item description and comment:

Ehime and Miyazaki

(6) Reproduction: (Yes) No

(7) Film no. Sheet no.

(Compiled by *National Diet Library*)

DECLASSIFIED E.O. 12065 SECTION 3-402/NNDG NO. 775013

Returned from Kure School Officials Mail 5/10/48.

Ehime M G Team
CE Section
File #409 E2#405

占領軍より配給された乾電池を使用して本校で行った実験報告

延岡市立延岡中學校長　下田敏
同校理科主任　今村馥

1 二極真空管（KX-12F）の静特性実験

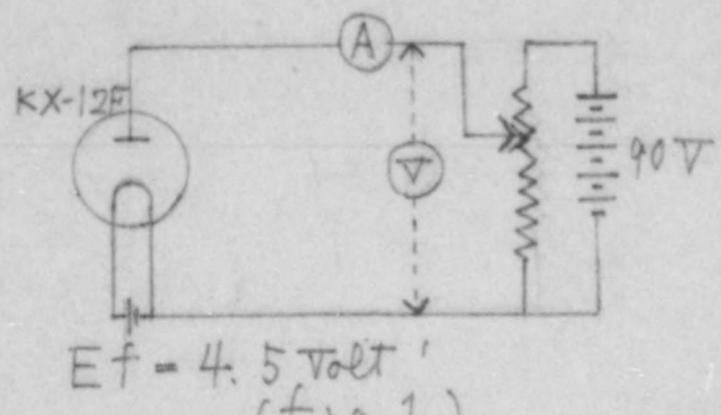

(fig.1)

Fig 1の如き結線に於てfilament Vollageを一定に保ちPotentio meter REを加減してPlate Voltageをchangeさせてこれに対するplatee cuyyent(Ip)をAmmeterでよみとるとその結果は次の如くであつた。

a) Ef = 4.5V, constantの時

Ep (V)	0	10	25	30	40	60	90
Ip (mA)	0	2.5	10	11.2	12	12	12

b) Ef = 3V, constantの時

Ep (V)	0	5	10	25	60	90
Ip (mA)	0	0.8	2	2	2	2

2 三極真空管（UX-12A）の静特性実験

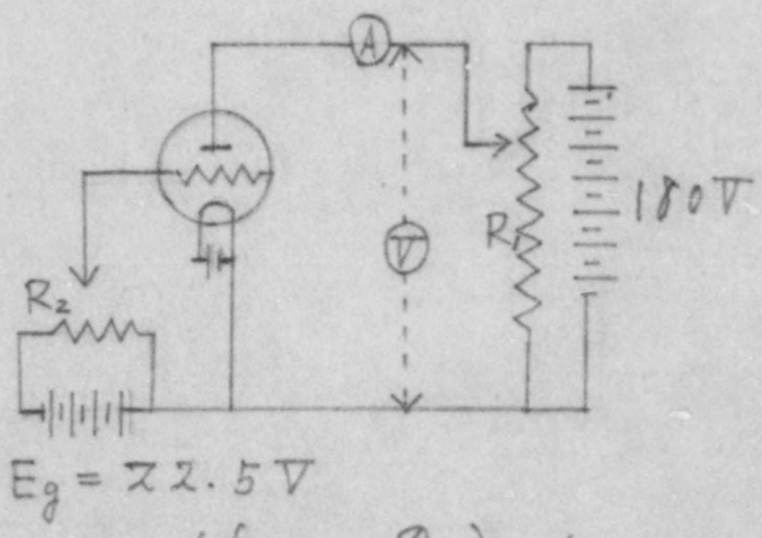

(fig. 2)

Fig 2の如き結線に於てEf=5Vでconst.に保ちPotentio meter Rを加減してgrid voltage Egをnegativeの範囲でchangeし、これに対するPlate current (Ip)の変化をAmmeterでよみとる。その結果は次の如くであつた。

Ef = 5V const.

a) Ep = 90Vの時

Eg (V)	0	-2.5	-5	-8	-10	-13
Ip (mA)	15	10	5	3	1	0

b) Ep = 135Vの時

Eg (V)	0	-5	-10	-15	-20
Ip (mA)	25	15	6	2	0

c) Ep = 180Vの時

Eg (V)	-7	-10	-15	-17	-20	-30
Ip (mA)	25	17	8	5	4	0

DECLASSIFIED E.O. 12065 SECTION 3-402/NNDG NO. 775013

3. Edison effect の実験

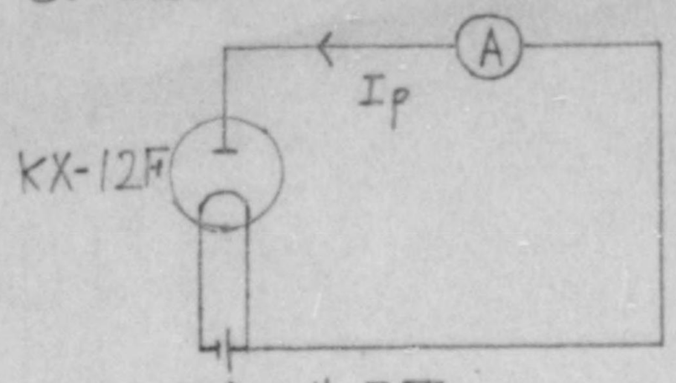

(fig. 1)

自由研究の時間にKX-12Fと4.5VのBatteryを用いてEdison effectの実験み、生徒に真空管の原理を或程度理解させることに役立てしめた。

Fig 1の如きconnectionに於てPlateに正の電位を与へたらplate current (Ip) は 2.4 mA 流れた。

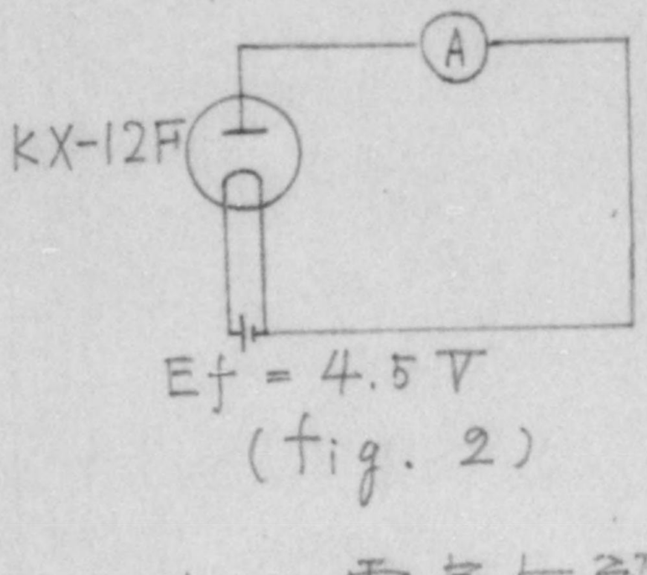

(fig. 2)

Fig.2の如きconnectionに於てplateに負の電位を与へたらplate current (Ip) は全く流れない。

4. 水の電気分解

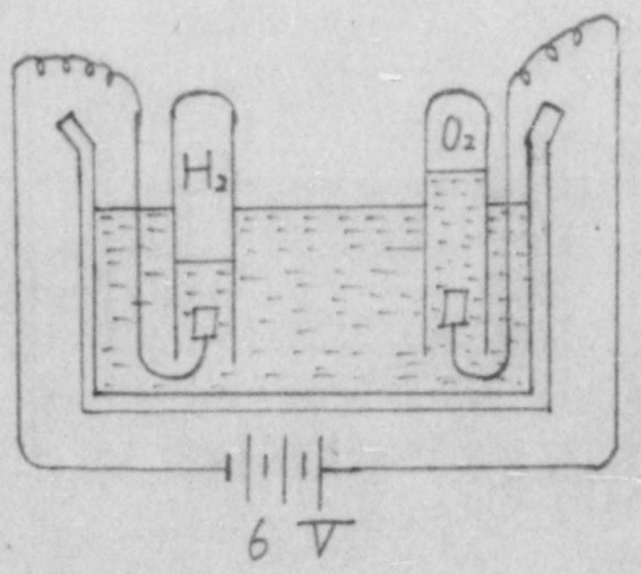

6VのBatteryを用ひ図の如き装置で水の電気分解を理科の時間に一寸生に試みた。水の中に少量のH_2SO_4をまぜると分解がよく進んでだ。水素と酸素の発生する割合は容積で約2:1であつた。

5. 鉱石ラジオ

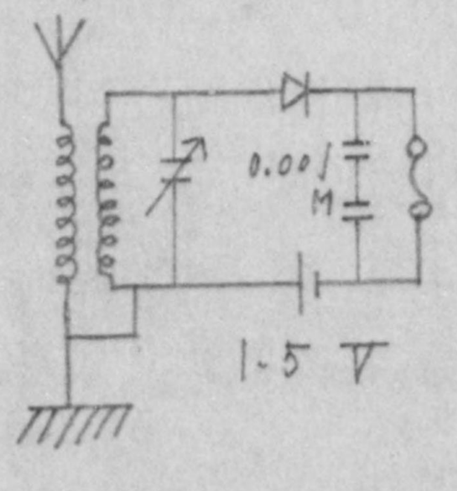

鉱石ラジオを作り図の如き箇所に1.5Vの電池を接続してみたが受信感度は大差がなかつた。

DECLASSIFIED E.O. 12065 SECTION 3-402/NNDG NO. 775013

6. 電池式二球受信機

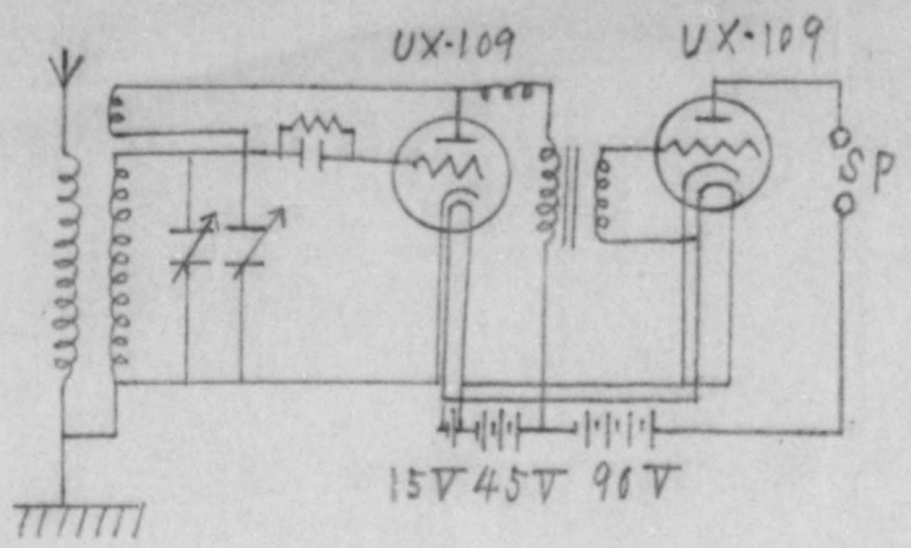

図の如き配線図の2球受信機を製作した。当市に於ては感度よく実用的価値あり。

⑦以上の外 Motor, 電信機を試作し 6V, 22.5V etc の Battery を用いて動作させてみました。

以上 昭和23年4月20日報告

昭和23年4月16日

占領軍配給乾電池使用情況下記のやうに報告します。

1 市販の豆モーター組立セットを希望の生徒に組立てさせ其の電源として使用（参加生徒約30名）但1組立のみに終り発展せず。

2 三年理科の実験用に使用

(イ) 豆球に点燈すること。

(ロ) 豆球を数個直列或は並列に入れること。

(ハ) 二個の電池の接続法の実験

(ニ) 電流が磁気作用を有することの実験

(ホ) 電鈴 電信機

以上

延岡市立東海中學校 松田米繁

米軍寄贈乾電池使用情況報告書

延岡市立恒富小学校

校長 牛田登

(1) 自由研究の製作品として模型モーターを作製させその原理を知らしむる為に 1.5V 乃至 4.5V の電池を使用した.

(2) 六年理科参習教材用として次のようなるに使いました。

(a) 銅メッキの状況

(b) 電灯, 電信機, 電磁石の原理

(c) 電池のつなぎ方 並列, 直列の別

(d) 銅 鉄 ニクロム線による電流抵抗の状況

DECLASSIFIED E.O. 12065 SECTION 3-402/NNDG NO. 775013

(e) 水中にある動物(蛙を使用)への電気誘導の様子
(f) 導体、不導体の見分け方
(3) 延岡市内の配電模型図を製作しました。
(4) 宅習課題として空箱利用の題題を提出した所最優秀品と思はれたのは携帯に便利、ね仙の電球に点火出来得るように考案された作品であった。

昭和23年4月17日
延岡市立黒岩小學校長 横山熊之助

宮崎軍政部宛報告書
標記の件左の通り御報告致します

記

1 豆球使用による点灯とスイッチ断続による点滅
2 模型信号燈作成(兒童)
3 直列つなぎ、並列つなぎの場合の差異
4 銅メッキ
5 電磁石
6 電信機(模型作成実験 兒童)
7 電鈴 (〃)
8 電動機(〃)

(備考)
電圧の高い電池の使用については延岡市役所外専課の斡旋により変圧器を購入の豫定

発學第一〇号
昭和二十三年四月二十日
延岡市立方財小學校長 工藤基

占領軍配給乾電池使用
についての報告
標記の件につきまして左記の通り御報告いたします

記

1 電池使用教材

DECLASSIFIED E.O. 12065 SECTION 3-402/NNDG NO. 775013

(1) 六年理科
電燈材料にて（抵抗実験）銅線と鉄線をつないで其の抵抗を見る。
実験
並列と直列に豆電燈をつないで電燈のつなぎ方を指導する実験メツキ教材にて電池を使用す
電信機と電鈴にて電池使用
電動機にて電池使用
(2) 學藝会のは電鈴使用　　以上

発才五号

昭和二十三年四月十七日

延岡市立延岡小等校長 出林友八

配給乾電池使用実験報告

標記の件左の通り御報告いたします

記

1 横型モーターの廻転の様子を見る（各児童）
1.5Vの物合，3Vの物合，5Vの物合
2 電気の抵抗の観察（教師）
6Vを細い鉄線でつないだ時と銅線でつないだ時
抵抗の様子を観察させた。それがひいては ヒューズの代用に鉄線等を用いると危険であるとの了解にもなった。尚3Vの豆球が6V以上で忽ち切れて使えないるも実験観察した。（各児童）
3 電鈴　ブサーを鳴らしてみる（各児童）
4 良導体 不良導体の見分け、電線と豆球との間にて，どう，えんぴつのしん，ゴム，セルロイド等を挿入れて，その明暗によって良，不良を観察した。（児童）
5 電信機を動かしてみた（各児童）

乾電池使用報告

延岡市立川島小等校長

1 電池実験の計畫

DECLASSIFIED E.O. 12065 SECTION 3-402/NNDG NO. 775013

文年　指導計畫

一、二年　(1)磁石遊び　(2)砂鐵取り　(3)電灯
（出来てゐる道具で上のような遊びを行はせる）

三、四年　(1) 1, 2年のものを實驗させる　(2)電磁石の製作
(3) 電池の構造についての觀察

五、六年　(1) 1年より4年までの実驗觀察　(2)電鈴　(3)メッキ
(4) 電信機　(5)電動機

2. 電池を使用したる実驗

1 電磁石の製作及び其の実驗

◎銅線の巻数及び鉄心の大小、電池の電力の大小により磁石の強さが変ること

◎石磁石のS, Nの極があり同極は相しりぞけ異極は引き合ふこと

◎磁石を水平につるすと南北を指して靜止すること

◎砂鉄をとるには普通の磁石より都合がよい。

2. 電灯

○ 豆球をつけて直列 並列の實驗

○ 豆球をつけると球が熱くなる

○ 家屋の電灯の引込線の模型の製作

○ 直流と交流について

3. 電信機 電鈴の実驗

○ 電磁石の應用の理解

○ 電流の流れ方の理解

4. メッキの實驗

○ 銅メッキの仕方等について

○ 電力の強弱によりどう変るか

5. 電導機

○ 原理の實驗　以上

昭和二十三年四月十八日

乾電池使用實驗内容報告

延岡市立土々呂小學校長 桑 香

1. モーター製作並に運轉

DECLASSIFIED E.O. 12065 SECTION 3-402/NNDG NO. 775013

各種モーターを六年児童に作製させ各種電池を貸與し自由に實驗させ不備なる点は教師之を助成す

2. 銅メッキ

硫酸銅並に電池を貸與し種々なるものにメッキを行はせメッキ出来るものと出来ざるものを研究させり

3. シグナル

シグナルを作製し電池を利用して赤球と青球の點滅をさす.

昭和二十三年四月十九日

延岡市立宇和田小學校長　加藤亮一

占領軍の厚意に依り配給された乾電池使用實驗内容を左記の通り報告致します

記

1 電信機(受信機　發信機をつなぐ)の實驗

2. 電鈴の實驗

3. 電磁石の實驗(完全なものの實驗　児童の作製による實驗)

4 豆電球の實驗

5. 磁針に及ぼす実驗

米軍寄贈　乾電池使用実驗報告書

延岡市立東海小學校

校長　鎌倉友平

1. a. 実驗用模型モーター(以下モーターと略稱)作成及びその原理についての一児童の研究

b. 一児童がモーターの一揃セットを購入し作成その実驗をなす。モーターの基本的な原理であるところの磁石の引力斥力の作用なることを自身で發見せしめるためにモーターの界磁回轉子等に磁石或は鉄片を止づけたらどうなるかとヒントを與へて実驗に當らしむ。それで自身で研究せしめた所コイルによる磁力の発生、二極モーターの大体の原理を知るに至る。この実驗に使用したる乾電池は1.5V—4.5Vであった。又実驗のため瞬間的に10.5Vの電池もモーターに使用して見た。

2. a. 電信機実驗の際に1.5V～30Vの電池使用す.

b. 一児童が電信機のセットより自分で組立て音響式電信機の原理を知る

DECLASSIFIED E.O. 12065 SECTION 3-402/NNDG NO. 775013

実験をなす.

3 a. 家庭の電球が小さな乾電池ではつかないので 100V 内外の電圧が要する事を示した實驗(児童に示した實驗)

b 家庭の 30W, 60W, 40W, etc の電球が 1.5V や 3.0V ではつかない事を示しその後で 103.5V の B.A. 3ヶをつないで児童に家庭の球が 100V を要することを知らしめる. 又逆に小さな豆球は 103.5V のような電池では切れる事を教へ豆球は 1.5V ～ 3.5V で丁度よい事を見せるために電池に接續して電球についての智識をまとめさす。

4. a. 100V 内外の電撃を知らしめ電気に対する非常なる恐怖心を去らしめ又電気を扱ふ場合の態度を指導し次に人体が電流の半導体なることを指導する(児童に示した実験)

b. 1 103.5V の両極に手を直接ふれしめて電撃を感じさす。之が電燈線の電撃なる事を教へ電気に對して恐れず又不注意にならない様に指導する.

2. 数名宛手をつないで両端のものが 103.5V の両極に觸れ接續を斷續する場合に特に弱い電撃のある事を感じ(め人体が半導体なることをさとらせた.

3. 上記 1, 2, の場合に手の乾濕に依って電流の通り具合が変ることに気づかしめ電燈線を取扱ふ時に濡れ手で絶対さはらない様に注意を促がす

5. 豆球(3V用)を使用して乾電池(1.5V)の色々な配線の変へ方に依って明暗のあること。抵抗線を使ってはるさの変化を見せ實驗を児童に見せる.

1. 電池二個を直列並列につけかへて配線を示しそのはるさを云はしめ線のつなぎ方で明るさの変る事を知らしめた。

2. 電池を三個にして矢張り上記の様にした.

3. 電池三個の変りに BA27 の 1.5V, 3V 4.5V のターミナルの出てゐる分にも接續して電池の大小によって明るさは一般的には変らず直列に接續した電池の個数に依って異なるを說明する. 又この時に電池は普通 1.5V なることを指導す.

4. ラヂオ用の抵抗器と豆電球とを直列につなぎその接觸部を回轉せしめて抵抗の大なるに従って明るさが次第になくなってゆくのを示し抵抗によって明るさを加減する事が出来抵抗器が大きいのにちがと

DECLASSIFIED E.O. 12065 SECTION 3-402/NNDG NO. 775013

アイロン電熱器になることを知らしめ又電流を加減する方法であるを知らしめる。

5 豆球に直列に紙鉛筆のしん、くぎ、はりがねetcをつなぎそれに電池と連結し、豆球の様子を見せて導体と不導体とあることを知らしめる。

6 a 鉄心コイルを作り砂鉄を集める実験を児童にみせる。

b 軟鉄に銅線を捲き児童が永久磁石でよく集めて知ってゐる砂鉄を電磁石で集めコイルに電流を通じると磁化し、又断って磁性を失ってしまう特徴をこの実験で知らしめる。

7 a 児童の作品たるモーターに乾電池で電流を通じてその回転を児童に示す

b モーターの構造 原理の基礎的なるを指導し、その校モーターを回転せしめ、電力が動力に変化して機械を動かするを知らしめる

以上

利用した乾電池の員数

BA 80	1個
BA 27	2 〃
BA 23	3 〃
BA 38	6 〃
BA 40	1 〃
BA 37	4 〃
BA 70	1 〃
BA 35.	2 〃

DECLASSIFIED E.O. 12065 SECTION 3-402/NNDG NO. 775013

File #409
E. L.

HEADQUARTERS
MIYAZAKI MILITARY GOVERNMENT TEAM
APO 24, UNIT 2

CFB/ss

28 May 1948
48/CE/SE/#2

SUBJECT: Use of American Batteries by Primary & Lower Secondary Students in One City of This Ken

THRU : Commanding Officer, Kyushu Mil Govt Region, APO 020
(Attn: Civil Education Section)

TO : Commanding General, Headquarters Eighth Army, APO 343
(Attn: Civil Education Section)

1. Reference Miyazaki Mil Govt Activities Report, Annex E-1, for the period ending 30 April 1948, an outline of the activities of a science club formed to develop extensive use of American batteries is submitted.

2. The first meeting of all science (rika) teachers was held in the middle of last December and a club formed with 13 schools participating in the experiments. A local chemical company (Asahi Kasei Kabushiki Kaisha) showed friendly cooperation by furnishing each school with approximately 2 lbs of 98% sulphuric acid. Frequent meetings were held for discussion and evaluation of methods and results. Experiments have been reproduced and distributed to all schools in this ken.

3. Copies of the specific experiments are enclosed in Japanese and a brief summary of some follow in English. Batteries used were:

BA80	1	BA40	1
BA27	2	BA37	4
BA23	3	BA70	1
BA38	6	BA35	2

a. Primary Schools

(1) Some students bought a set of motor parts and assembled model motors using batteries as motive power. By placing a magnet or piece of riron close to the rotator, stator or magnetic field of the motor they discovered, the fundamental theory of the motor and of magnetism -- i.e. attraction and repulsion, generation of magnetism by a coil and how to construct a simple dipole motor.

DECLASSIFIED E.O. 12065 SECTION 3-402/NNDG NO. 775013

2 pole, 3 pole and polypolo motors were also built by the students. Batteries of 1.5 to 4.5 volts were used.

(2) In other schools all boys and girls build miniature houses of paper cartons and other materials easily obtainable. Girls made windows of colored celophane and decorated the houses. A large map of the city was made showing the hydroelectric power plant, steam power plants and substations. Map was spread on a large table and the houses glued to the surface. Flash light bulbs were installed in each building and transmission poles (chopsticks) erected and wires strung. Batteries were placed in hydro-electric and steam power plants and resistors in each substation so that any boy or girl could control power transmission to any section of the town. All students cooperated in the development of this project and could visualize how power is generated, transmitted to substations, furnished to consumers and why and how electric conservation is effected druing dry seasons.

(3) Experiments with electric shock were conducted to familiarize students with the dangers of electricity, to reduce unnecessary fear and to obtain an understanding of the conductivity of the human body. Students touched both poles of a 103.5 battery simultaneously which is approximately the equivalent of light lines in homes. They realized that a shock of this degree is not dangerous if understood and handled with care. Various types of insulation were used, paper, pencil lead, nails, needles, iron and copper wire. 5 or 6 pupils held hands and contact was made and broken. Both wet and dry hands were used and the reason for not touching electric wires or utencils with wet hands was quite apparent to all.

(4) Baby light bulbs (3V) and 1.5V batteries were used in different connections and variations in brightness obtained by the use of resistors.

(5) Some boys built single-tube, battery-driven receiving sets with ordinary regenerative circuits after they succeeded in building crystal detectors.

(6) Various experiments with bells and buzzers were carried on to discover how to ring more than 2 bells with one switch, and how to connect many bells and switches together using only one battery. Battery driven bells were used during school-plays, Kamishibai, etc.

(7) Model railway signal arms were built and remotely controlled.

DECLASSIFIED E.O. 12065 SECTION 3-402/NNDG NO. 775013

(8) Resistance experiments were tied in with home fuzes. Students realized why it is dangerous to use make-shift fuzes at home. It was found that electricity can generate heat as well as light and motion through the use of resistors. Simple hot plates, irons and heaters were made. Copper plating was tried on various materials using copper sulphate and batteries. They discovered that not all materials can be plated and that battery voltage affected the rate.

(9) Difference of magnetism was demonstrated by changing the coil winding, diameter of the core and by using batteries of various voltage.

(10) Telegraph keys and receivers were constructed and the principle of wireless telegraphy demonstrated.

(11) The difference between large and small batteries of the same voltage was shown by the following illustration: Large and small buckets with the same size hole drilled in the bottom were filled with water and picked up by students. The water in the larger bucket took a larger time to drain just as the electricity in a larger battery lasts longer. In Japanese a battery is called "Denchi" which literally translated means "Pond of Electricity" for this very reason.

b. Lower Secondary Schools

Nobeoka Junior High School, Agata, Nobeoka

(1) Filament voltage is kept constant, while anode voltage (Ep) is changed by means of the potentiometer (R), and anode current (Ip) is checked by the Ammeter (A). The results follow:

(a) When Ef (Filament voltage) was 4.5V constant,

Ep (volt)	0	10	25	30	40	60	90
Ip (mA)	0	2.5	10	11.2	12	12	12

(b) When Ef was 3V constant,

Ep (volt)	0	5	10	25	60	90
Ip (mA)	0	0.8	2	2	2	2

(Fig 1)

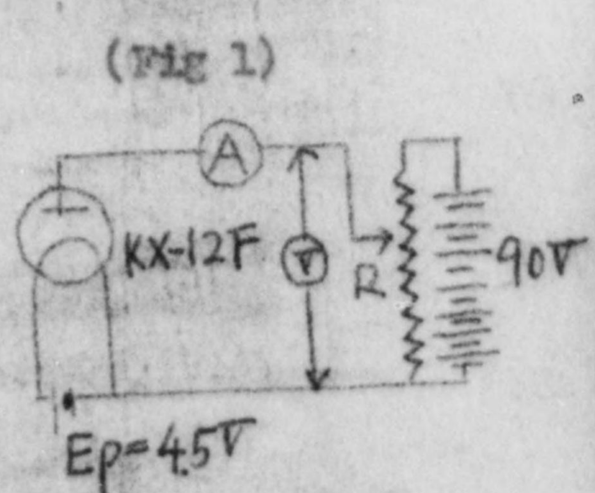

DECLASSIFIED E.O. 12065 SECTION 3-402/NNDG NO. 775013

BASIC: Ltr, Hqs Miyazaki MGT, dtd 28 May 48, subj "Use of American Batteries by Primary & Lower Secondary Students in One City of This Ken" cont'd.

(2) Ef is kept constant at 5 volt, while grid voltage (Eg) is varied by the potentiometer-B2 but not that it will exceed negative: and the variation of anode current, Ip, was checked by the Ammeter, A. The result was as follows: (Fig 2)

(a) When Ep was 90 volt, constant,

Eg (volt)	0	-2.5	-5	-8	-10	-13
Ip (mA)	15	10	5	3	1	0

(b) Ep was 135 volt, constant,

Eg (volt)	0	-5	-10	-15	-20
Ip (mA)	25	15	6	2	0

(c) Ep was 180 volt, constant.

Eg (volt)	-7	-10	-15	-17	-20	-30
Ip (mA)	25	17	8	5	4	0

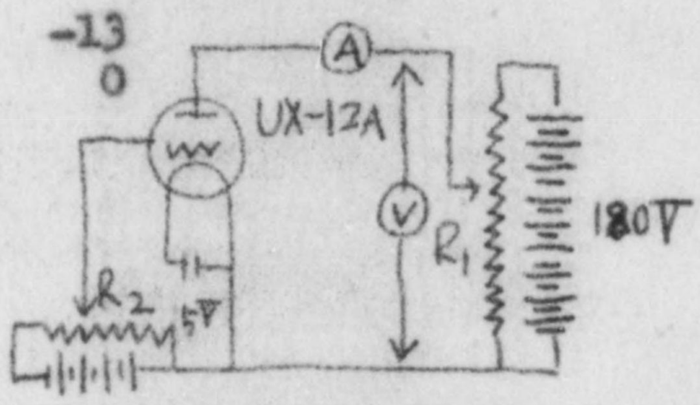

(3) Experiment of "Edison" - Effect.
One KX-12F tube and a 4.5 volt battery were used to demonstrate Edison-Effect during "Jiyu Kenkyu" (free study) hour which helped students understand the function of a radio tube.

(a) When we gave positive tension to the anode in the connection of Fig. 1, the plate current, or anode current, Ip, was 2.4 mA.

(Fig. 1)

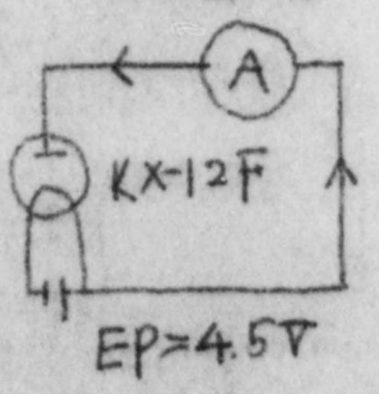

(b) When, however, the negative pole of the battery was connected to the anode as in Fig. 2, there was no anode current.

(Fig 2)

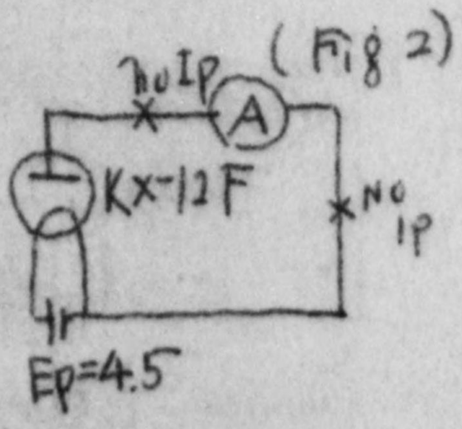

DECLASSIFIED E.O. 12065 SECTION 3-402/NNDG NO. 775013

BASIC: Ltr, Hqs. Miyazaki MGT, dtd 28 May 48, subj "Use of American Batteries by Primary & Lower Secondary Students in One City of This Ken" cont'd.

(4) Experiment of water-electrolysis.

One 6 volt battery was used in such an apparatus as shown in Fig. 3. When a small amount of sulphuric acid was added to the water the electrolysis progressed faster. The ratio of oxygen to hydrogen available by this experiment was about 1 to 2 in volume.

(Fig 3)

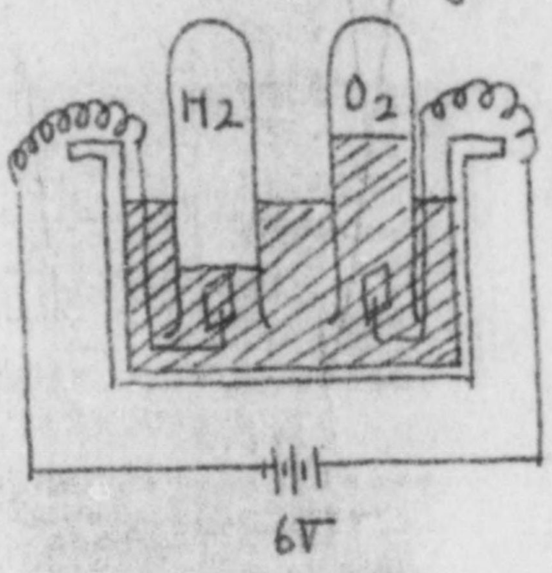

(5) One crystal detector set was made. A 1.5 volt battery was connected as in Fig. 4, but there was not much difference in its sensitivity.

(Fig 4)

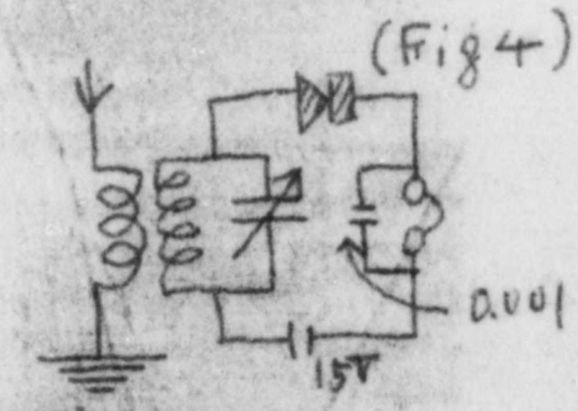

(6) Battery-driven 2 tube receiver

A receiving set with 2 tubes was made as shown in Fig. 5 which showed fair sensitivity in this city.

(Fig 5)

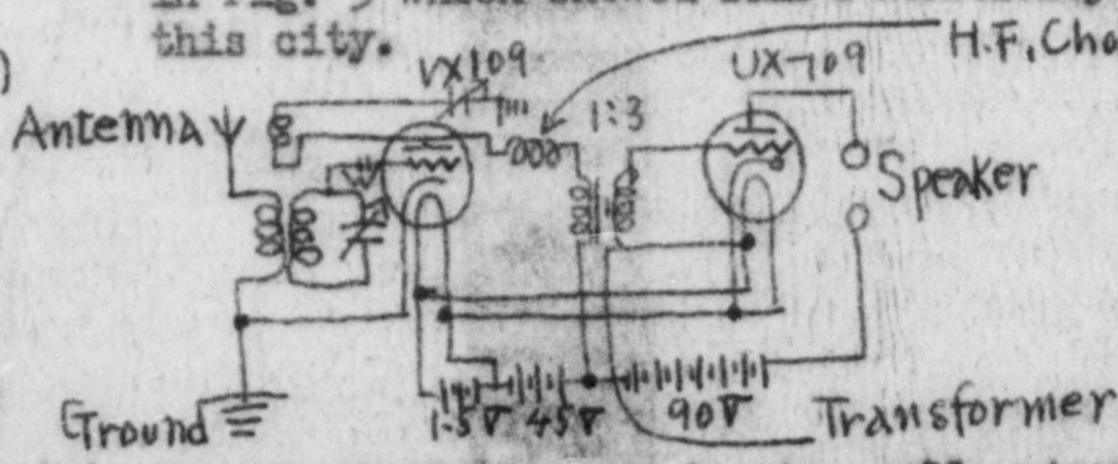

(7) Beside the above experiments small motors. telegram transmitters were built by the students which were driven by batteries of 6 V, 22.5 V. etc.

1 Incl:
1. Battery Experiments in Japanese (40 copies)

Distribution:
20-8th A
12-1 Corps
8-KSMG

ESTELL A. HUTCHINSON
Major CMP
Commanding

COPY

DECLASSIFIED E.O. 12065 SECTION 3-402/NNDG NO. 775013

File #409 ξ 2

Science Conference

Mr. Oka - Mombusho (Native of Ehime) — Shikoku Science Education Committee.
Miss V.Edmiston - CIE, SCAP — About 300 Science Teachers

Mr. Oka spoke to assembly
Explained danger of lecture method
Necessity of visual aids(pictures) for complete understanding
Pointed out old method of teaching in Kochi Ken by his personal experience.
Teacher-interest predominates rather than pupil- interest
Pupil - interest must be considered first.
4th grade
Units of Science in 4th grade

1 book(1. What living things are around us?)
(2. How do living things you?)
1 book(3. What is the sky like?) 1 for 10 pupils
let(4. What is the sauth is surpose made of?)
1 book(5. Dry Cells)
let(6. Hot water)
(7. How can we bealthy?)

Life of frog-pupils actual experiment differed from text:
Actual experiment more meaningful than printed word. If teachers stick to text there is no development: teachers must emphasize the actual survey (experiment) made by students. In physics and zoology teachers must consider the interest of the students. Teachers must decide the best curriculum to commend pupil interest and use such visual aids as colored slides to hold it.

Units of Science
Seven units made in set of five texts with colored pictures.
In order to have a better printed text only 1 copy for every ten students. (Next year 1 for every five pupils)
Mombusho texts - 1 for every ten pupils
Regional texts - 1 for every five
Record and observation booklet - 1 for every pupils
Mombusho is general - not necessarily the best. Pupil interest varies from section to section. Mombusho standard not absolute - improved by local committee on Science teaching
Principles of teaching should be based on pupil interest
Old texts were not interesting to students
Texts written to promote pupil activity along
Many lines to stimulate their interest in natural phenomena in their environment rather than in the text as such.
Game of 20 questions to arouse pupil interest
Try to determine what boys and girls want to know, find out where their interests lie. Examine your own community, determine what improvements are necessary

In his community speaker observed that pupils liked better to have holidays. School life in Japan has not contributed to practical living. Girls had to be sent elsewhere for proper training. School has not been vitalized.

Science Conference — March 15th, 1948

DECLASSIFIED E.O. 12065 SECTION 3-402/NNDG NO. 775013

Your children like activity but are made to remain quiet in the school room. School should be a place where children can enjoy living, can engage in interesting activities)

Use of scientific method in all school activities--Sanitation in use of water wells. School education should improve the life of the community.

In fishing village, school should teach not to catch lobsters during certain three months to protect them.

Correct unscientific religious attitudes in the community

How to prevent illness in community? Scientific medical treatment when illness comes, moving pictures on prevention of infectious diseases.

Unit of science should be composed of students own experiences in their community. Should have connection with actual life in the community. Importance of good roads--stress actual situation rather than principle.

Discussion

Q. Japanese characters in curriculum not easily readable, too difficult.
A. 1800 characters can be used in text. M/E preparing list of 881
Q. Old texts were more easily readable
A. Because now have to conserve paper.
Q. Science, Math has horizontal writing
Others vertical. Should be uniform Horizontal better
A. Some subjects fit in letter with vertical writing
Q. Chemicals for preserving for etc difficult to get
Mombusho has recommended.
A. Mombusho recommendations consider the future also.
All these things cannot be done at present, each of preservatives, etc., Mombusho is working on better distribution.
Q. Method of teaching by 20 questions one method but not the one and only, use method pupils like the best.
A.
Q. Shortage of equipment
A. Instruments and equipment not essential, use every day materials and equipment
Q. Preparatory course for science teaching?
A. Observation, experience in actual life
Q. How to take first steps in science unit?
A. Questions at begin of each unit suggesting related experience
course of study has suggestions.
Speaker read boys composition on his observation about Fish
(Record and obse vation booklet)

DECLASSIFIED E.O. 12065 SECTION 3-402/NNDG NO. 775013

Areas of elementary science teaching 6-7 units-general texts and social units
1. Living things
2. The sky - the earth
3. Machines and tools
4. Health

Science Conference : afternoon session

Panel Discussion

Mr. Oka - Chairman

4 members of panel
1. Middle school teacher
2. Normal school teacher
3. Middle " "
4. Onsengun Committee member

(2) Panel member - prefectural text book, is it necessary (?) Has been working on 6th grade textbook. When he started he thought would be necessary to have text book for each prefecture. Dicided as he worked not necessary.

(1) Panel member - believes every prefecture should have own supplementary textbook.

(4) Panel member - feels this matter depends on subject. Biology requires Local text, electiricity does not.

(3) Panel member - each Ken should make its own supplementary Textbook giving more details (local?) and more concreat than Mombusho text.

(a) Member of audience - feels local text book necessary in his community to present local paper industry

(b) Member of audience - More important how teacher should work than how pupil should.

(1) Read composition on typhoid illustrate need for correct information

(2) Asked (a) about textbooks

(a) believes more than own text book necessary in Science classes

Mr. Oka - more kinds of books more necessary than more copies of single text.

(b) Teachers own textbook - his basic text, other supplementary

Mr. Oka - impossible for each teacher to have his own text- must depend on Mombusho and Ken text.

(c) Member of audience - Standard unit of work should be specipied

Round table discussion - Science Education Committee * see below
with Mr. Oka, Mombusho

Text book for the 5th year grade for the year 1948
How to make good use of living beings
To avoid making it encyclopaediac
To make use text book enjoyable to boys and girls
They realized how difficult it is to write. Every sentence should be with some significance Science teaching.
A woman teachers' opinion on how to get boys and girls interested in electricity
The description in the old text book is not interesting.
It should be rewritten into more enjoyable way -- To mend broken electric iron.
Text-books for 5th and 6th year grad should be printed by September.

DECLASSIFIED E.O. 12065 SECTION 3-402/NNDG NO. 775013

Connection between Elementary school course and secondary school course--These should be close connection. These should be close connection. These should be no gap between them.
How to generate electricity.
Paper
45 sheets of paper for each unit.
  26x26 lines 12 paint type
  33x32 lines 9 " "
Smaller types will be used for printing examples
(such as of the twenty questions and answers for discussion)

Plan for the whole year.
Committee in each "gun" (distriet) is now doing its best in discussing and making the text book.
Education Research Institute (Kyoiku Kenkyusha)
There are some teachers who are not really interested in teaching science, though they are interested in science.
Fresh teachers are friends of students. But having get used to teaching, they are not students' good friends. One of the committee says that fresh teachers are not eager in criticizing the text book. But others say that this is not right. Old teachers should be continued
A teacher in Uma-gun - The Umagun district being active in paper manufacture, he would like to use the unit "Paper Mill" in his text book--Mr. Oka suggest that the teacher should point out the out-of-date process of paper manufacturing in the paper mill in Umagun.
To teach the origin of unscientific and primitive folk lore in the old calendar--Mr. Oka suggests it too early. The best way is to tell boys and girls the scientific membering of days in solar calendar. The most necessary things is to replace old folklore with new scientific way.
One teacher suggests to use paper play in teaching in science.

* General area of unit should be specified by central government. (4) (3) Genera principles given by M/E. Details given by local teachers. Miss Edmiston - Functions of booth the Mombusho texts and Ken texts. Mombusho to specify general principles of Science at each level and local teachers to fill in specific situation from community life. Both kinds of texts are necessary and useful.
Mr. Oka - How should teachers make studies to fulfil their responsibilities.
(e) from audience - teachers must know the cultural and economic environment of students and their ability
(c) from audience - teachers must know general education plans and principles, environment
How determine ability of students
Miss Edmiston - Use of pupil cards (cumulative record and observations of pupils made by teachers) In keeping file must have in mind what you are looking for - will vary from teacher to teacher: Does the child see a science problem around him - alert to science? When problem arises does he go about it in scientific way? Wheh he recognizes problem does he do something about it - action? Does the child apply the general principle?

DECLASSIFIED E.O. 12065 SECTION 3-402/NNDG NO. 775013

Ed. #409 17

March 05 — 16 1948

1, Committee meeting of text books on science in Ehime prefecture Inspector S. Yagi

1. Principle of compilation
   a Mr. Semba is responsible for general ones.
   b. For each unit, authors of its own
2 Deliberation on the manuscript of the units
   a Expression form is far from satisfactory Study of the interest of children is not sufficient. general construction needs re-consideration, too, 'Calender' is passed
   b. As for letters and words they will be re-examined after we have heard the child read them.
   c. Explanation is too long. Simplification is necessary
   d. Authors should not explain themselves let fathers, or elder brothers, sisters or teachers take the role of explaining in the books.
   e. Let the hero or heroine study or think. let those scenes in the book.

Report of Science Text book Committee March 15 & 16 1948

DECLASSIFIED E.O. 12065 SECTION 3-402/NNDG NO. 775013

SCHOOL:_____ DATE:_____

I. B. 2. What percentage of student applicants is rejected?

What system is used in the rejection of applicants?

3. What percentage of the enrolled students were absent during the last month?

What were the main causes of absence?

4. (Private Schools)
   a. What is the tuition fee?

   b. When was this school last inspected by Japanese officials?

C. Comments and suggestions:

DECLASSIFIED E.O. 12065 SECTION 3-402/NNDG NO. 775013

meeting

3 Next Topics (March 25 — 26) at the Educational Hall.

(1) Examination of the manuscripts of the units

(2) Generalization of the principles of each in writing

(3) How to copy the manuscripts

DECLASSIFIED E.O. 12065 SECTION 3-402/NNDG NO. 775013

SCHOOL:_____ DATE:_____

I. B. 2. What percentage of student applicants is rejected?

What system is used in the rejection of applicants?

3. What percentage of the enrolled students were absent during the last month?

What were the main causes of absence?

4. (Private Schools)
   a. What is the tuition fee?

   b. When was this school last inspected by Japanese officials?

C. Comments and suggestions:

DECLASSIFIED E.O. 12065 SECTION 3-402/NNDG NO. 775013

菅敏美雄　　File #409 E2

小学生の科学 22.

電氣はどんなに利用されているか

A.

教科書の目次（愛媛教科書委員案）	理解の目標
前がき	
1. 電燈 ----------→	電燈はどうして光を出すか。ヒューズは
2. 電氣アイロン ----------→	電熱器はどうして熱を出すか。ヒュ
3. 電信機・電鈴・モーター ------→	電磁石はどんなはたらきをするか。電磁石
4. 電氣はどのようにしておこすか→	電氣はどのようにしておこすか。電氣は発電
5. ラジオ ----------→	ラジオは電氣をどのように利
6. 研究 --- 電氣器具のあつかいにはどんな注意がいるか	電気器具のあつかいにはどん

B. 啓培すべき能力・態度.

◎思考能力（考え方）

①問題をつかむ能力. ②数量的に観る能力. ③原理応用の能力.

◎技術的能力.

①配線する. ②工作する. ③安全に仕事をする. ④機械器具

◎培うべき態度.

①協力する態度. ②自ら進んで究明する態度. ③事実を尊重する

C. 根本方針.

①4年生の単元"乾電池でどんなことができるか"の上に発展と深化を意

②中学生の単元の基礎とする。

③指導のイデオロギーは従前のものと変らない。従って執筆に際して

④作業を必然的に伴うような教材を取り入れる. e.g. ⑩…… ⑪…

D. 表現・叙述の概要.

①科学史傳的色彩を時々にじみ出させる.

②類推に役立たせる例え話を時々採用する.

③普通の叙述形式が主流となる. 各目次の終　疑問.

④図. 寫眞、肖像、数値表等を沢山に入れる.

Unit on Electricity

DECLASSIFIED E.O. 12065 SECTION 3-402/NNDG NO. 775013

409
EL

1948. 3. 16.
Tomio Kan

いるか

	理解の目標（小事元、文部省案）
-->	電燈はどうして光を出すか。ヒューズは何のために使われるか。
-->	電熱器はどうして熱を出すか。ヒューズは何のために使われるか。
-->	電磁石はどんなはたらきをするか。電磁石を利用した機械にどんなものがあるか。電動機はどのようにしてまわるか。電動機を利用した機械。
-->	電氣はどのようにしておこすか。電氣は発電所からどんなにしておくられるか。電池はどのようにしてはたらくか。
-->	ラジオは電氣をどのように利用したものか。
か	電気器具のあつかいにはどんな注意がいるか。

的に観る能力、③原理応用の能力、④分析綜合的に取扱う能力、⑤企画する能力、⑥推論する能力

安全に仕事をする、④機械器具を使う　⑤正確に測定する

で究明する態度、③事実を尊重する態度　④発明する態度、

できるか”の上に発展と深化を意識して執筆する。

のと変らない。従って執筆に際してもその積りで進む。
を取り入れる。e.g. ⓐ…… ⓑ…… ⓒ……

出させる。
採用する。
なる。各目次の終　疑問、問題を入れる。
沢山に入れる。

DECLASSIFIED E.O. 12065 SECTION 3-402/NNDG NO. 775013

Unit on Belly Storms, etc.

小學生の科學　傳染病や寄生虫はどうしたら防げるか　案　若田種基

I　文部省案 小單元

1. 傳染病にはどんなものがあるか
2. 傳染病はなぜうつるか
3. 傳染病を防ぐにはどうしたらよいか
4. 体は病原体とどのようにたゝかうか
5. 傳染病のない明るい社会はどうしたら生れるか

目次(案)

まえがき　はじめの問題

1. 傳染病にはどんなものがあるか
2. 傳染病はなぜうつるか ①大きな病原体 ②小さな〃〃
3. 傳染病や寄生虫を防ぐにはどうしたらよいか 1. 健康な体 2. 消毒
4. 体は病原体とどのようにたゝかうか 1. 白血球と病原のたゝかい 2. 免疫
5. 傳染病や寄生虫のない明るい社会はどうしたら生れるか
6. 与えたはいつ結核になるか … 紙芝居

II. 表現形式 1. 普通の叙述形式をとる 7. 主すじ あとの問題
2. 圖及び写真に頁の半分を使用する 細字で図の説明 欄外に語句の説明
3. 本文の前後 及 小單元の間に問 研究を入れる

III 理解の目標　能力　技術　態度

能力 1. すじ道の通った考方をする能力
2. 物事を関係的に見る能力
3. 資料を使う能力
4. 推理する能力

技術
1. 健康を保ち進める能力
2. 資料を集める〃
3. 危険から身を守る〃
4. 機械器具を使う〃
5. 薬品を使う能力

DECLASSIFIED E.O. 12065 SECTION 3-402/NNDG NO. 775013

III 理解の目標 能力 技術 態度

能力 1. すじ道の通った考方をする能力 4. 推理する能力

2. 物事を関係的に見る能力

3. 資料を使う能力

技術

1. 健康を保ち進める能力

2. 資料を集める〃

3. 危険から身を守る〃

4. 機械器具を使う〃

5. 薬品を使う能力

態度 1. 迷信をきらう態度

2. 自ら究明する態度

3. 慎重に行動する〃

4. 専門家の意見を尊重する態度

III 根本方針

1. 本學年前後の連絡

四年どうしたら丈夫な体になれるか（生きてゐるばいきん 子どもの医者）及中学三年

人と微生物のたゝかい 高校一年（改訂予定）生物と病気の中間的な発達段階に

於ての其の使命

2. 防疫（予防医學）知識 技術の普及の立場

3. 一般的なものを前 $\frac{2}{3}$ に述べ後半は結核を中心的に述べる（小單元 6）

DECLASSIFIED E.O. 12065 SECTION 3-402/NNDG NO. 77501/3

小学生の科学 II 「こよみ」はどのようにしてつくられたか

目次 1. こよみ　2. こよみと太陽・月　3. こよみと地球　4. 太陽が時刻をはかる

教育の根本方針

1. 教科書は児童に読んで読まれるもの、研究心を起させ研究の動機を与えるものたること
2. 此の単元は旧厂新厂について大要を理解させることに主眼をおき合せて新厂が旧厂より優れていることを知らせる。
3. 従来の多くの教材について特に原理と実生活問題との関係について多くを与えない為の問題を感じた。
   此の問題にどこまで原理指導の深さの限度に生徒をおいたものであるかということ。又この問題を一定部理解されねばならないということはない。
4. 「こよみと太陽・月」では幻想的な従来体と「こよみと地球」では理論的な指導に傾いたかという点もあるが、これは理論的説明に便なる為であって、必ずしもそうではない。
5. 立入り方に於ては、もっと実験と関連せしめるような作業に重点をおいてもよかったのではないか。
6. 此の文章体が積極的研究態度へ積極的研究意欲であるか解決されると共に生徒でない、もっとそれへの指導をもって欲しい。又そんな風に解決されるおそれがあるなら原文に入れる用意がある。
7. 厂の説明は子供達にて「下は山かやに切って売る」というのを引き延ばして「厂は何故にかくあるか」という意味の厂製作の原則といったものを理解させるよう留意した。
8. 挿絵については次の点を留意した
   1. 児童の理解を助けるもの　2. 教科書を表にねばの興味をおこすもの
9. 345.2+222日とか365-53-58日の如き数字はやや込み入りすぎるきらいがあるが5年生の計算能力から考えると此の計算は可能であると思う。従来使用した教科書に之と同じような数字が用いてあるからそれを急激に改める必要があると思う。若此の数字をかえることによって問題の解決がかえって分り易いのではないかと思う。

単元	理解の目標	考え方	技能	態度
①こよみ	興味や学習意欲の喚起…導入 新旧厂の大要を知らせる 厂と実生活との関係理解 世界厂への導入	推理的な考え方 関係を見る 資料をつかむ	資料を集める 図表をつくる 整理する	人の意見をきく 疑問をもつ 科学を尊重する 新らしいものをつくる
②太陽・月とこよみ	旧厂の作り方及不合理な点 新厂の作り方及旧厂より優秀なこと 閏について 新厂及旧厂の簡単な歴史	比較考察 すじ道の通った考え方 数量的考察 問題をつかむ	数量的に処理する	疑問をおこす 道理にしたがう 創生の意見をさく 環境に興味をもつ

つて分り易いのではないかと考へる

単元	理解の目標	考へ方	技能	態度
①こよみ	興味必要感の喚起…導入 新旧厂の大要を知らせる 厂と実生活との関係理解 世界厂への導入	推理的な考へ方 関係を見る 資料をつかふ	資料を集める 図表をつくる 整理する	人の意見をきく 疑問をおこす 科学を業重する 新らしいものをつくる
②太陽 月 こよみと	旧厂の作り方及不合理な点 新厂の作り方及旧厂より優秀なること 閏について 新厂及旧厂の簡単なる厂史	比較考察 すじ道の通つた考へ方 数量的考察 問題をつかむ	数量的に処理する	疑問をおこす 道理にしたがふ 先生の意見をきく 環境に興味をもつ
③地球 こよみと	地球の自轉公轉、地軸のかたむきより春夏秋冬のおこるわけ 晝夜の別及長さの変化、寒暑の起るわけ 夏至、冬至 春分、秋分について理解させる	資料を使ふ 関係を見る 数量的に考へる すじ道の通つた考へ方	資料を集める 継続観察 機械器具を使ふ 記録する 整理整化	科学業重 道理にしたがふ 根気よくやる
④太陽で時刻をはかる ⑤問題	日時計の製作 標準時と眞太陽時 日附変更線 連続を正す	関係を見る すじ道の通つた考へ方 比較観察 推論する 問題をかゝむ 事実原理の応用 結果を予想する	継続観察 器械使用	道理にしたがふ 連続を正す 注意深く行動 新しいものをつくる 専門家の意見をきく

DECLASSIFIED E.O. 12065 SECTION 3-402/NNDG NO. 775013

DECLASSIFIED E.O. 12065 SECTION 3-402/NNDG NO. 775013

この中のどれを採用するかの検討

戸に関する俚諺集（該話を綜要より）

1. 冬至に西南瓜食へば中風になる
2. 冬至に雷なれば雨水多し
3. 冬至には大根が1時に大きくなる
4. 彼岸すぎての麦の肥
5. 彼岸は日に炙をすべると病気がなほる
6. 彼岸の中日に釣つたはぜを食ふと中気せぬ
7. 節分にこんにやくの白あへを食へば腹の砂が下りる
8. 節分の豆を初雷に食へば雷に打たれぬ
9. の外の5月收の6月
10. 八十八夜の別れ霜
11. 八月社日に雨降れば翌年の五穀豊熟
12. 八月は離れ月
13. 二十炎
14. 暑さ寒さも彼岸まで
15. 銀杏の中に星多き年は雨少し
16. 1日15日 28日に物言ふな
17. 五間10両
18. 丑年の子は兄にたゝる
19. 丑寅の年の生れの人は鰻を食ふべからず
20. 丑の日鰻を食ふと菓になる
21. 丑の日に深ふた紅は無菓になる
22. 丑の日に灰をとると火事になる
23. 丑の日のことは長引く
24. 卯年生れの女は美人
25. 閏年には猫も杓子も子を生む
26. おそなさの西瓜
27. 弟に丑の年の歳あれば嫡家に祟りあり
47. 19初夜月 20日はなから23夜は出て寄す
48. 10月の木の葉おとし
49. 10月の投げ木 [illegible]
50. 正月3日に菜食ふと其の年に鳴
51. 正月に蓋豆を食ふと其の年まめになる
52. 正月、盆の16日は地ごくの釜のふたがあく
53. 月の7日に初旅するな
54. 2月は逃げる
55. 2、8月は風の為
56. 210日の前7日
57. 210日の荒れじまひ
58. 日は西から出ぬ
59. 三日月の下に横雲あれば4日のうちに雨降る

19 丑寅が年の生れの人は鰻を食べずからず
20 丑の日鰻を食ぶと某になる
21 丑の日に買ふた紅は無薬になる
22 丑の日に灰をとると火事になる
23 丑の日のことは長引く
24 卯年生れの女は美人
25 閏年には猫も杓子も子を生む
26 お元まきの西瓜
27 常に丑の年の歳あれば嫡家に栄りあり
28 陰陽師の内に達願えず
29 庚申にかゆを食べば貧乏になる
30 庚申風邪
31 風三月
32 九月蚊張は釣らぬもの
33 甲子の日の晴雨は60日続く
34 5月虹を見れば麦の価乗し
35 5月半ばに心なしに隋はれよな
36 5月ひでりに米高いな
37 5月の風に4早り 6,8風に9は高
38 桜3月 しゃうらのは5月
39 三月やみ
40 土用忌
41 五月雨は腹の中までしさらせる
42 寒いときに穢いものなし
43 三月一日に雷鳴れば豊年の兆
44 三月のかつら雪
45 三月の桜雨
46 4月に雪降れば百姓せめて奉公せよ
54 2月は逃げる
55 2,8月は風の祝
56 210日の前7日
57 210日の荒れじまひ
58 日は西から出ぬ
59 三日月の下に横雲あれば4日のうちに雨降る

DECLASSIFIED E.O. 12065 SECTION 3-402/NNDG NO. 775013

DECLASSIFIED E.O. 12065 SECTION 3-402/NNDG NO. 775013

File Science

Development of Units for Elementary Science

1. Materials for elementary school science are being developed on a local and regional basis as one of the first steps in the decentralization of the development of instructional materials. Local groups are being encouraged to develop units of work to fit into the science curriculum, while regional committees will function as clearing houses and will assist local groups in their projects.

2. The project for this Fall:

   (a) What is to be done?

   Individual teachers or local groups of teachers should plan out, and then try with their students, science units that will fit into the science curriculum.

   (b) What has been done?

   By September, the present Advisory Committee on Science Curriculum meeting in Tokyo will have worked out the scope and sequence of the elementary science curriculum through grade 6. This together with the descriptive handbook to guide local groups of teachers in developing units, will be sent out early this Fall.

   (c) What will be done with units developed locally?

   When a unit has been worked out for a local community, the Japanese should be sent in to the regional chairman and through him to the Ministry of Education Science Compilers. The best units will be used in the science textbooks developed in 1948-49 for grades 4, 5, and 6.

3. What materials will MG Officers have to help with this project when such help is requested by Japanese educators?

They will have:

   (1) The English translation, a chart showing the scope and sequence of the elementary science curriculum and a handbook for use of local committees developing science units.

   (2) War Department Education Manuals (USAFI)

Development of Units for Elem. Science

DECLASSIFIED E.O. 12065 SECTION 3-402/NNDG NO. 775013

Nitta School Unified Scientific Research Association.

File: Science

November 1947.

(1.) Purpose and Activities.

I. Purpose - to cultivate scientific minds practically for in & out of school.

II. Activities -
- (1) Scientific lectures to be held many times in a year.
- (2) ½ familiar chats.
- (3) Publication of researches
- (4) Scientific training of volunteer labour (i.e. Scientific repairs of the facilities of school & grounds)
- (5) observation, sample collections.

(2) System

I. General members.
- (1) students of 4th year grade volunteries of 5th year grade. Volunteries under 3rd year grade.
- (2) school staffs of other institutions voluntarily joined.

II. Supporters.
- (1) directors of this institution Voluntary gurdians School staffs of Gover
- (2) leaders of scientific education. (Ken and Matsuyama City) chief of Educational Sec. government-school inspectors and inspectors.
- (3) leaders and assistants of healthful living.
  - chief of Ken-sanitary sec. School sanitary experts.
  - Officers of physical culture. chief of Food Sec. chief of Social Sec. chief of Social Education Sec. chief of Public Hearing
  - chief of Aquatic Sec. Principals of news papers.
  - School nurses nurses.
- (4) Scientific Education Specialist (Matsuyama district)
  - professors of colleges and Secondary schools. head teacher of science of Elementary Principals of Elementary and Secondary schools.
- (5) chiefs of factories of all kinds Principals of companies of all kinds chiefs of associations of all kind. chiefs of self-governing bodies of all kinds. (Matsuyama district)

Nitta School Science Association (P.T.O.)

DECLASSIFIED E.O. 12065 SECTION 3-402/NNDG NO. 775013

(16) lawyers. chiefs of police stations. chief of the maintenance of Public Peace Sec.
(17) chief of Experimental Laboratory. chief of Matsuyama Observatory. chief of groups.
(18) director of hospitals. doctors. managists. Moxa-cauterizers.
(19) chiefs of business offices. Chief of Matsuyama Kanri-sho, State Railway.
(10). Post office master.
(11) teachers of tea-ceremony and flower arrangement.
(12) chiefs of department stores.
(13) enusiastic farmers.
(14) religionist.
(15) miscellaneous.

III. Persons in charge

President. vice-president. officers of general affairs. accountant.

IV. Councellors.

chief director of this school.
chief of Ken Ed Sec.

DECLASSIFIED E.O. 12065 SECTION 3-402/NNDG NO. 775013

新田學園綜合科學研究会

昭和二二、一一、

(一) 目的及事業

I. 目的……學園内外、各層の実際面に科學する心を培ふ。

II. 事業……年数回開催

(1) 科學講演会
(2) 仝座談会
(3) 仝研究發表会
(4) 求むる勤労作業の科學的実習(例、學園の科學的[illegible]
(5) 見學、採集

(二) 組織

I. 普通会員

(1) ……本校四年、五年有志、並三年以下の篤志生
(2) ……本校教職員有志

II. 賛助会員(順序不同)

(1) 本校理事、本校父兄有志、語学教職員
(2) 科學教育指導官(愛媛縣庁)(松山市庁)
教育課長、視學官、視學員

DECLASSIFIED E.O. 12065 SECTION 3-402/NNDG NO. 775013

(3) 全研究発表会
(4) 求むる勤労作業の科學的実習(例) 學園の科學的校
(5) 見學、採集、

(二) 組織

I. 普通会員

(1) ……本校四年、五年有志、並三年以下の篤志生、
(2) ……本校教職員有志、

II. 賛助会員 (順序不同)

(1) 本校理事、本校父兄有志、語学教職員、
(2) 科學教育指導官(愛媛縣庁)(松山市庁)
教育課長、視學官、視學員
(3) 健康生活指導官等
県衛生課長、學校衛生技師、体育官、食糧課長、社会課長
社会教育課長、公聽課長、水産課長、
新聞社長、養護教諭、保健婦
(4) 科學教育専門家、(松山地区)専門学校教授、小中学校理科主任、小中學校長、
(5) 各種工場長、各種會社長、各種組合長、各自治団体長(松山地区)
(6) 法曹家、警察署長、保安課長、(7) 試験場長、松山測候所長、団長
(8) 各病院長、醫師、按摩、灸点師、(9) 各営業所長、国鉄松山監理所長
(10) 郵便局長、(11) 茶道華道師匠、(12) 百貨店主、(13) 篤農家、(14) 宗教家、
(15) その他

III. 役員

(一) 會長、副会長、庶務、会計、

4. 顧問

本校理事長、[illegible]教育部長

DECLASSIFIED E.O. 12065 SECTION 3-402/NNDG NO. 775013

新田學園綜合科學研究会

昭和二二、一一、

(一) 目的及事業

I. 目的……學園内外、各層の実際面に科學する心を培る。

II. 事業……

(1) 科學講演会
(2) 仝 座談会
(3) 仝 研究發表会
(4) 求むる勤労作業の科學的実習(例、學園の科學的修繕)
(5) 見學、採集

年数回開催

(二) 組織

I. 普通会員

(1) ……本校四年、五年有志、並三年以下の篤志生

(2) ……本校敬職員有志

II. 賛助会員(順序不同)

(1) 本校理事、本校父兄有志、語る敬職員

(2) 科學教育指導安(愛媛縣广)(松山市广)
教育課長、視學安、視學員

(3) 健康生活指導安等

DECLASSIFIED E.O. 12065 SECTION 3-402/NNDG NO. 775013

(4) 求むる勤労作業の科學的実習（例 學園の科學的修繕）
(5) 見學、採集。

(二) 組織

I. 普通会員

(1) ……本校四年、五年有志、並三年以下の篤志生。
(2) ……本校敬職員有志。

II. 賛助会員（順序不同）

(1) 本校理事、本校父兄有志、語学敬職員。
(2) 科學教育指導官（愛媛縣庁）（松山市庁）
教育課長、視學官、視學員
(3) 健康生活指導官等
県衛生課長、學校衛生技師、体育官、食糧課長、社会課長
社会教育課長、公聴課長、水産課長
新聞社長、養護教諭、保健婦
(4) 科學教育専門家（松山地区）専門学校教授、小中学校理科主任、小中學校長、
(5) 各種工場長、各種會社長、各種組合長、各自治団体長（松山地区）
(6) 法曹家、警察署長、保安課長、(7) 試験場長、松山測候所長、団長
(8) 各病院長、醫師、校寧、灸点師、(9) 各営業所長、国鉄松山監理所長
(10) 郵便局長、(11) 茶道華道師匠、(12) 百貨店主、(13) 篤農家、(14) 宗教家、
(15) その他

III. 役員

(一) 會長、副会長、庶務、会計

4. 顧問

本校理事長、[redacted]
愛媛縣教育部長

DECLASSIFIED E.O. 12065 SECTION 3-402/NNDG NO. 775013

File: Science

(26 Nov. Art or Shin-Ehime P.2)

"A society for All Scientific Research" start in Matsuyama Nitta Middle School, tne students taking the leader.

For the purpose of cultivating scientific minds fit for living life, a society for all Scientific Research is borne in Matsuyama Nitta Middle School. It projects to hold regular research meetings many times in one year. It plans the meetings of scientific lectures, discussions, announcing the results of their researches and observation of scientific training of labour and collections.

Regular members include all students under 3rd years and the voluntary students of the 4th and 5th years.

Leaders and advisers include directors and voluntary guardians of students of that school, professors of Gosen, scientific educators (prefectural and city school inspectors etc) health educators (sanitary expert, school nurse, health nurse etc) scientific education specialist in Matsuyama district (professors of science in college and elementary secondary schools) and factories, corporations, police stations, doctors, and also headmen of sections of Ken-education, social education, public hearing. fishing products are under request to join. Reported it will start in a large scale.

Shimbun Article

DECLASSIFIED E.O. 12065 SECTION 3-402/NNDG NO. 775013

APR 18 1947

VIII I

(New System) For 1st Grade, Middle School.

Our Science (4)

What and How Much Should We Eat?

Ministry of Education

Science Unit: What & How Much Should We Eat?

DECLASSIFIED E.O. 12065 SECTION 3-402/NNDG NO. 775013

What and How Much Should We Eat?

Foreward.

Question 1. What is important among various foods?

Question 2. How much heat does food produce?

Question 3. How much should we eat?

Question 4. What becomes of the food used in the body?

Question 5. What are the uses of vitamines?

Question 6. What attention should be paid to having good meals?

DECLASSIFIED E.O. 12065 SECTION 3-402/NNDG NO. 775013

Before you start the study of the problem of "What and How Much Should We Eat?", answer the following questions:

1. Do you think there is no fear of lack of nutrition if you eat lots of rice?

2. Do you think everything becomes nourishing if it is finely powdered?

3. Are fruits luxuries which have nothing to do with nutrition?

4. What is the source of the heat which keep us warm and the power which we put forth when we work?

5. Do you know the minimum quantity of food necessary for your living?

FORWARD

What will you do if you are given 100 yen and told that you must board yourself for two weeks with that sum? Some of you may think, "Oh, it is quite easy. I shall eat the rationed main food. The sum is enough for me to buy sweets, too. Two weeks will be over soon". Then, suppose all of you simultaneously take part in a competition in which the winner will be the one who proves he has taken nutriments most efficiently during the two weeks. It is absolutely necessary to have strict physical examinations before and after the competition. The increase of weight is an important standard.

In order to increase the weight as much as possible, you must study the problem of "What and How Much Should We Eat?" Just remember the kinds of food. There are numerous kinds of it. When we take up, for instance, rice, sweet potato, meat and sardine from among them, we find many problems regarding them. With regard to main food, which is more nourishing - rice or sweet potato? Which animal food is more nourishing, sardine or beef? What difference is there nutritively between rice and meat? Which will be the more nourishing if we eat 10 yen worth of each? These are taken up as problems. Rabbits, mice mouse, and pigeons living in the mountains and fields eat as much as they please of what they want to eat. Do you think we shall grow without fail if we, like them, eat as much as we please of what we want to eat? Why, then, have we been cautioned very particularly against making personal choice in foods? Further, in these days, it is almost impossible to eat as much as we please of what we want to eat. Things that we want to eat may not be found in the market. If they are found, they may be very dear. When food is short

DECLASSIFIED E.O. 12065 SECTION 3-402/NNDG NO. 775013

we cannot eat as we please. We often hear people say, "I find that nowadays very small wounds all matter and they will not cure soon. My family are all having the same trouble. I guess it is because of food, isn't it?" We also find that sometimes a whole family have swollen faces or have nettle-rash. Is it a contagious disease spread among the family? Or is it caused by food?

Can you think clearly over these various problems? Each one of them, in fact, has a very important relation with our daily living. It will help us very much to solve our pending questions if we know how the scientists are studying nutrition problems and in what way they are proceeding with their thinking.

QUESTION 1

WHAT IS IMPORTANT AMONG VARIOUS FOODS?

1. The ingredients of milk. If we want to know what is good for nutrition among various kinds of food, it may be simply determined by giving a person such food and examining the results. But in most cases we find it difficult to make experiments on men, because the experiments may by chance result in death or serious illness of the tested man. It is for this reason that mice, pigeons or rabbits are used in place of man. Mice and pigeons are very different from man, but in most cases what is found regarding mice and pigeons can be applied to man. Although it is a good thing to observe the relation between the condition of your body and the food you eat, you are advised to use little animals if you make an experiment. If, in addition to these little animals, you keep domestic animals, such as chickens, goats, cows, pigs, horses, dogs and cats, you will be able to find a clue to solve your questions about nutrition by observing the relation between their food and the condition of their bodies.

A rabbit lives on various kinds of grass, while a silkworm ends its whole life eating no other thing than the leaves of the mulberry bush. We cannot live on only one kind of food. It can be said that only one kind of food does not contain all of the necessary elements for our growth and activity. However, babies grow drinking only their mother's milk. Calves also grow perfectly well on cow's milk. But later both need other foods for milk is not adequate for adult life. Experiments made upon other animals also prove that milk alone can be considered the food containing the elements almost completely.

DECLASSIFIED E.O. 12065 SECTION 3-402/NNDG NO. 775013

Then, let us examine what sorts of elements are contained in milk. Although cow's milk is mainly taken up here, goat milk does not differ greatly.

Experiment: Put milk in a bottle and leave it for a day. A cool place is preferred to avoid putrefaction. Observe the change that takes place in the upper part and lower part of the milk. What gathers in the upper part?

Experiment: Put a bit of milk on a slide glass and examine it with a microscope. You will see a group of numerous small particles as shown on the illustration.* Each little particle is fat.

Fat particles of milk

When milk is divided into two layers, the fatty upper layer is called cream. It is the more important part of milk for it contains material essential to health. The lower layer is skim milk. We sometimes need to have skim milk since it is good for babies suffering from diarrhea. In such a case, scoop the cream and separate the skim milk.

There are some mothers who consider that raising their babies by cow's milk is more scientific than raising them by their own milk and give babies bought milk in spite of having abundant good milk to give them. This is a great mistake. Cow's milk is most fitted for bringing up calves, but nothing is better than mother's milk for raising babies. Cow's milk, as well as condensed and powdered milk, is a substitute used when a mother's milk is bad in quality because of her illness or when her milk is short in quantity.

Butter is made from cream. For making butter, milk is put into a cream separator as illustrated. When the machine revolves quickly, heavy skim milk gathers at the outside and light cream gathers at the center and thus they are separated. When cream is put into a barrel-like vessel which is turning slowly, yellow fat separates from water and becomes a lump. The lump is mixed with a bit of salt, kneaded and made into butter.

Cream separator

Drum

Footnote: *When we observe the little particles carefully, we notice they are making movements as if faintly quivering. The smaller the particle, the bigger is the quake. This is what we call Brownian movement. It was first discovered by Brown, a botanist, when he put pollen on glass with water and saw it with a microscope. Anything that is a small particle makes this movement. It is not that the particles move with their own force but that they are kicked and moved by the molecules in the surrounding fluid.

DECLASSIFIED E.O. 12065 SECTION 3-402/NNDG NO. 775013

Try it yourself, as it is easy to make butter. Put cream into a bottle and shake it for 20 - 30 minutes. Yellow lumps of fat begin to appear. As you continue shaking, the lumps gradually grow bigger. When they become as big as beans, separate them from the fluid and knead them, adding salt. Try it when the weather is favorable as the fat does not gather well in cold weather.

Experiment: Warm up skim milk for about 40 minutes and churn it, adding hydrochloric acid gradually. You will have a white sediment. It is protein and it is mainly made of a kind of ablumin which is called casein.*

Experiment: Put a piece of litmus paper in the above liquid from which casein is removed and see the reaction. Try the litmus paper also with vinegar, juice of oranges, hydrochloric acid and sulphuric acid. Also observe the change using lime water, lye, bicarbonate of soda, caustic soda, caustic potash and ammonia.

As you know from the experiment, the liquid that turns blue litmus paper red is called acid, and the liquid that turns red paper blue is called alkaline.

Experiment: Mix acid liquid with alkaline liquid until blue and red litmus papers change to the same color. This process is called neutralization. The liquid thus made is a neutral liquid. Water is neutral, too.

Experiment: Neutralize with lime water the liquid from which casein is removed. Remove the sediment and obtain a clear fluid. Boil it down and cool it. You will get many white crystals. Separate the crystals by filtration. Taste the crystals and you will find they are like ordinary sugar. This white crystal is lactose which is a kind of sugar. Lactose is used for medicine. It is the source of the sweetness of mother's milk and cow's milk.

Experiment: Take a portion of the fluid from which lactose has been removed. Vapourize it completely and bake it. At first it becomes a black lump and as it burns there is left a white powder. The white powder does not change at all if you continue burning. It is ash which contains calcium, phosphorus, iron and other minerals.

In addition to these, vitamins which are very important nutritively. They cannot be extracted easily because of the quantity dissolved in butter

Footnote:* It is called hydrochloric acid casein, because it is obtained by adding hydrochloric acid. It makes a good cement. The casein is dissolved by alkali such as slaked lime or caustic soda. Try the dissolved one as a cement.

DECLASSIFIED E.O. 12065 SECTION 3-402/NNDG NO. 775013

and water is small. The ingredients of milk are summarized in a graph as below.

We have learned what cow's milk is composed of. In other words, the ingredients are fat, protein, sugar, ash, water and vitamins - six kinds in all. It can be said that cow's milk is almost sufficient to maintain our nutrition since it contains these ingredients. Mother's milk and goat's milk, too, contain these six kinds; although in slightly different ratio.

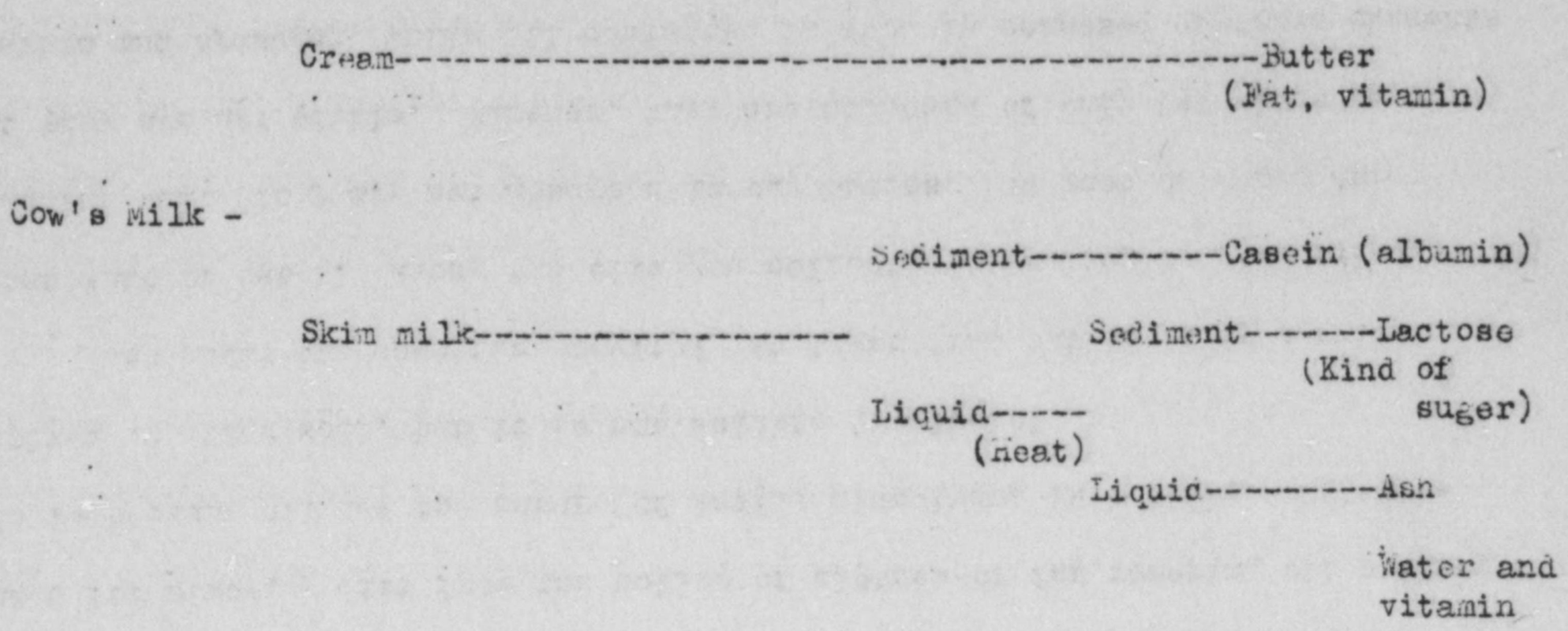

*

	Albumin	Fat	Sugar	Ash	Water
Cow's Milk					
Mother's Milk					
Goat's Milk					

Thus the difference between foods will become clear. When we examine them dividing into ingredients. Rice, barley, meat and vegetables can also be examined in the same way, with more difficulty, but with the same results.

2. What is fat like?

Now, let us remember all kinds of oil we know. Collect as many samples as possible. You must already have tried a simple method of finding oil in seeds as in the case of rapeseeds. Those which contain oil in seeds other than cloza are soy-bean, sunflower, peanut, cesami, castoroil plant, "Egome" (Perilla ocimordes), oil paulownia and olive.

Footnote:* Vitamins are excluded from this graph of ingredients, as they are so small in quantity that it is difficult to show them alongside the other five elements. The quantities of vitamins are given later.

DECLASSIFIED E.O. 12065 SECTION 3-402/NNDG NO. 775013

Make investigations on whatever you have obtained. Some of them will clearly show you fatty particles like milk when examined by a microscope.

Oesami, castor-oil plant, "Egome", oil paulownia and olive illustrated.

So, now that you have collected various kinds of oil you are probably aware of the difference between oil and other things. Make it clear in what way oil differs from other things and what is the common nature of all kinds of oil.

At what degree does it boil? What is the difference between the boiling points of oil and water? From these points, consider about the temperature of oil when you fry food. How does the temperature compare with that of boiling water? What sort of change does the difference in temperature bring to the cooked food?

Does the oil dissolve in water? Does it mix with water? It also is important to see if it dissolves in alcohol, benzine or ether, although it may be difficult for you to do it if there is a shortage of such solvents. When extracting oil from soy-bean or bran of rice, the method of soaking them in benzine is adopted in order to dissolve oil. You know that benzine is also used for removing dirt from the collar of clothes or for removing oil stains. It is because oil has the nature of easily dissolving in benzine. Oil dissolves in ether well, but it is not soluble in alcohol.

What about the specific gravity? At least find out if it is heavier than that of water. Among the oils you collected there may be rock oil and machine oil. They are not absorbed in our bodies. We must put them aside as they are not edible. Further, they are composed of only two elements of carbon and hydrogen, while oil contained in food is composed of three elements of carbon, hydrogen and oxygen. You must call the latter fat and must set up a distinction between the former and latter.

From now on, let us limit our study on fat which is related to our nutrition. Among various kinds of fat, soy-bean oil, rapeseed oil, cesami oil, corn oil (Mazola oil), rice oil and olive oil are fluid, while fat of cow (fat), fat of pig (lard) and butter are solid. The Chinese letter "Abura" (oil or fat) is written in two ways. One means liquid, such as rapeseed oil, and the other means caked fat such as butter. These two words are combined together

DECLASSIFIED E.O. 12065 SECTION 3-402/NNDG NO. 775013

to mean fat and oil in a word. Solid fat such as butter melts and becomes liquid when warmed up, and liquid oil such as rapeseed oil becomes solid fat when chilled. Therefore, the difference between fat and oil is nothing but the difference in appearance which is conditioned by the temperature of the moment. By the way, why are there many kinds of fat having different natures among those which are grouped together under the name of fat? Why are they different in kind in spite of the fact that they are compounds of the three elements of carbon, hydrogen and oxygen? It is because carbon, hydrogen and oxygen are combined in different ratios. The difference of the ratio means a different kind of fat. When thinking observingly, it may be said that when different kinds of fat are decomposed they produce carbon, hydrogen and oxygen in different ratio by weight.*

Experiment: Take small portions of various kinds of fat. Bake them in a crucible or on a metal plate. You will see that each of them contains carbon.

Remember that fat has another important nature. You made soap when you were in the fifth grade. It was an experiment to see that any kind of fat can be made into a soap when caustic soda or caustic potash is added and boiled. When the soap separated from water and became a lump, you kept only the soap and threw the water away. In that water glycerine had been made. Thus, fat becomes soap and glycerine when decomposed. Is it not a curious destiny that soap which is used to wash off fat is made from fat itself?

3. What is carbohydrate like?

We have already found that there is lactose in milk. Think of natural sweetness other than lactose. Nowadays, you may mention first of all saccharin and zuruchin, but they are not natural products. Also, they produce neither heat nor power in our bodies, but are discharged as they are. They merely flatter our taste on the tongue, and, moreover, are harmful when taken in too large amounts. When compared with them, nothing is better than natural sugar in that it is both nourishing and agreeable in taste. There is no doubt that ordinary cane sugar is the king of sweetness. It is called cane sugar because it is pressed out of sugar cane. Sugar is obtained also from

Footnote:* For example, the ratio of combination of carbon (C), hydrogen (H) and oxygen (O) of a certain kind of fat (A) is: C:H:O 18:_:_, and in another kind of fat (B) the hydrogen is smaller as shown by C:H:O 18:_:_. A is solid, and B is liquid. If hydrogen is blown into B, the ratio of hydrogen increases and it congeals and becomes A. The fat thus made is called hardened fat and now it is made in a large-scale industry. Soy-bean oil and fish oil are hardened in this way and are used as the material of artificial butter and soap.

DECLASSIFIED E.O. 12065 SECTION 3-402/NNDG NO. 775013

the roots of beets. It is called beet sugar and in our country it is mainly produced in Hokkaido. In America sugar is also taken from the trunk of sugar maple trees.

Sugar cane Sugar beet Sugar maple

Sugar cane is a plant which grows well in hot areas, so it barely grows in "Kanto" district. Before the war the majority of sugar came from overseas and so at present we find it difficult to drink the sweet "Shiruko" (sweet bean soup). But instead you have come to notice the sweetness of vegetables. The sweetness of the stone-leek and onion belongs to this sugar. Thus, sugar is contained in various kinds of plants, but you must not think that the sweetness of plants always comes from the sugar. There is glucose in grapes, fruit sugar in fruits and maltose in the malt of barley. Glucose can been seen in many plants. And there are other kinds of sugar than those mentioned here. Now you must have learned that there are many kinds of sugar. These kinds of sugar are not related to each other, although they are all alike in that they are sweet, are crystalized and are soluble in water. Still they are connected with each other in a very intgresting way. If we add acid to ordinary cane sugar it decomposes into two sugars, glucose and fruit sugar. Maltose turns to glucose only. We cannot decompose glucose and fruit sugar into other kinds of sugar. When we investigate the elements that compose the glucose and fruit sugar, we find they have only the three elements of carbon, oxygen and hydrogen. The ratio of hydrogen and oxygen is 2:1 and it is the same as that of water.* It is called carbohydrate as it is just the combination of carbon and water.

Footnote:* The elements that compose water are: Hydrogen (H) Oxygen (O) (Marks of elements)

The number of atoms that make each element are: Hydrogen 2 (H_2) Oxygen 1 (O) ------The molecular formula of water is H_2O

The elements that make glucose are: Carbon (C) Hydrogen (H) Oxygen (O)

The ratio of atoms that make each element of glucose is: Carbon 1 (C) Hydrogen 2 (H_2) Oxygen 1 (O) - same as water

The number of atoms that make glucose are: C_6 H_{12} O_6 ---- The molecular formula of glucose is $C_6H_{12}O_6$

The formula of fruit sugar is same as glucose: It is: $C_6H_{12}O_6$

The formula of ordinary cane sugar, malt sugar and lactose is: $C_{12}H_{22}O_{11}$

DECLASSIFIED E.O. 12065 SECTION 3-402/NNDG NO. 775013

The same interesting relation can be seen also between starch and sugar. So, starch is one of the relatives of sugar and it is in the group of carbohydrates. Memorize such connections through various experiments. You are about to begin.

Experiment: Investigate various kinds of starch with a microscope. What color does it turn when a dilute solution of iodine is applied:

Experiment: Boil various kinds of starch and investigate at what degree they become paste.

Microscopic photographs of various kinds of starch.

Experiment: How do rice and potatoes taste if you chew them well?

Experiment: Drop your spittle into a dilute solution of starch. Use a solution of iodine and see if the starch vanishes. In this experiment you may put the starch in a test tube. You may also put a bit of it on a slide glass and examine it with the microscope.

Experiment: Use a thin solution of diastase instead of spittle. From these experiments you will see that starch is changed by the spittle or diastase into a substance soluble in water which can no longer be called starch. It is considered that both spittle and diastase contain something called an enzyme. Other enzymes decompose protein, fat, and many other things. As for the enzyme that decomposes albumin and fat, we shall study it later on.

The decomposing action of an enzyme is very quiet and swift. A very small quantity of an enzyme can decompose a large quantity of the same thing. It does not require boiling, roasting, heating or strong medicine. In the body of a living creature there are numerous kinds of enzymes and they compose or decompose various sorts of things. It is just like a carpenter. Although the enzyme is such a clever worker, we are still unable to make it artifically. Only the body of a living creature can produce it. Some of you may think that at least diastase is a medicine manufactured by pharmacy. Yes, it is manufactured and sold, but it is not that the pharmacy is making the enzyme itself. The fact is that man merely takes out the enzyme produced in the body of yeast. As for the power that mould decomposes starch, remember the manufacture of malt and sweet wine. Malt is a steamed rice on which malt yeast is cultivated. When the yeast grows it makes the rich much sweeter than when it is steamed.

DECLASSIFIED E.O. 12065 SECTION 3-402/NNDG NO. 775013

This is because the enzyme in the yeast decomposes the starch of rice and changes it into sugar. With this enzyme the yeast changes the starch into a substance soluble in water and takes the sugar into its cells to nourish itself. When making sweet wine, the malt is mixed with boiled rice and the enzyme in the yeast changes the starch of rice into sugar. In this way "Amasake" (a sort of sweet drink) is made. When you make sweet wine at home, try to make as sweet wine as possible. The nature of the enzyme will dawn upon you clearly.

1. Study the relation between the temperature and the time that "Sweet wine" takes to become sweet.

2. Investigate if the traditional secret methods of making sweet wine are correct or not.

3. It is because of the propagation of germs which make acid that the sweet wine becomes sour. The temperature most fitted for the propagation of germs is about 38 degrees. If the wine is warmed at this temperature in the process of manufacture the action of the enzyme that makes the wine sweet is not very great, while the germs multiply themselves and make the wine sour.

4. When the temperature is too high the enzyme is broken down and cannot be recovered if the temperature is lowered. In this respect the enzyme resembles the living creature. It is just like a burnt creature which can never again be restored to life.

Now you have learned that the starch becomes sweet with the aid of enzymes. Let us look for another enzyme that does work resembling this. It is found in the process of glutinous rice-jelly (Japanese name: Mizuame) making. When making glutinous rice-jelly, malt of barley is used as the medium for the enzyme which decomposes starch. For the growth of the bud of barley, it is necessary to change the starch in the seed into sugar which is soluble in water and send that sugar to the bud, because the starch cannot flow through the seed. It is for this reason that an especially great amount of enzyme is made in the malt.

Experiment: Try to make malt. It is said that good malt is made only when the root is grown as long as 1 cm. and the roots are all grown equally well. Think out the way to make as good malt as possible. What is a suitable

Malt of barley

DECLASSIFIED E.O. 12065 SECTION 3-402/NNDG NO. 775013

temperature? Is it good or bad to expose the malt to the air? These questions will aid you in your research.*

Experiment: Mix lukewarm water with any kind of starch. Mix ground malt and leave it for a few hours keeping the temperature at 50 - 60 degrees. Find out in what way the taste changes and the starch disappears.

If you use much malt you can see the change much earlier. As in the case of sweet wine, the enzyme loses its power when the temperature is too high and does not recover if the temperature is lowered.

Thus, when the starch has almost disappeared, filter the residue and throw it away. Boil down the remaining liquid and you can get liquid glutinous rice-jelly. The sweetness of the liquid comes mostly from malt sugar. It is the starch that is decomposed by the enzyme and changed into malt sugar. The liquid gluten is not all made of malt sugar. Malt sugar is not enough to produce the stickiness of the gluten.

The glucose which is often sold out in the streets is not taken from grapes, but it is obtained by decomposing starch with thin hydrochloric acid or sulphuric acid. It is mainly made of glucose. From this you will know that the starch can be decomposed not only by enzymes but also by acid. Starch can be decomposed into glucose. Now you must have realized that starch belongs to the group of sugar.

In addition to the sugar and starch, cellulose, too, can be mentioned as the companion of carbonydrate. Cellulose is what makes the cell membrane of the plant. It is contained in almost all the ordinary plants. It is contained in great amount especially in the straw and bran of rice plants and barley. Vegetables contain a little of it and those which are overgrown or run to seed have an especially great amount of it. You make no great mistake if you consider that the solid portion of edible plants contains much cellulose. If we eat cellulose, the enzyme which dissolves it is not contained in our digestive juice. Therefore, even if we eat it, we cannot make it the source of heat and power. We must not think, however, that cellulose is utterly useless. It stimulates our digestive organs and helps peristaltic movement. It also increases the quantity of excrement and aids the action of bowels. But we need not eat so much of it. If we eat too much, it only increases our

Footnote:* When you use the manufactured malt at once you may just grind it. For keeping it for a long time, dry it well in the sun. It would be better if you rub it and remove the root. When using, make it a powder.

DECLASSIFIED E.O. 12065 SECTION 3-402/NNDG NO. 775013

excrement since it is not digested. Although our digestive juice does not contain an enzyme that decomposes cellulose, cellulose is decomposed by the enzyme possessed by a certain kind of germ.

Cotton and paper are mainly made of cellulose, and if you notice that paper, wooden chops and dead plants in the manure, sewage and soil naturally rot or melt away or soak into the soil, you will understand that surely the germ is doing its work there. In the intestines of men, too, cellulose is decomposed and utilized to some extent by the work of the germ.

When it comes to herbivorous animals such as cows, horses, sheep and goats, the germ is utilized in a larger scale. Some people say, "Cows and horses are living on straw and wild grass. Why can we not live eating such things?" Do not believe it, however. Do not think that the results of animal experiments can always be applied to man. Since the cellulose is hardly digested by man's intestines, in most cases tables showing the ingredients of food include only digestive carbonyorate, and indigestive carbonyarate, such as cellulose is usually shown separately.

Experiment: Apply acid and alkali to cotton and filter-paper and see how they change. Refined cotton and filter-paper are made of almost pure cellulose.

Experiment: Apply thick sulphuric acid to cellulose and see how it changes.

When we dissolve cellulose in thick sulphuric acid, dilute it with water and boil it for a long time, it all changes into glucose. This fact will make you aware that, like starch, cellulose, too, is the companion of carbohydrates.

Experiment: Bake slowly sugar, starch and cellulose. You will find that all of them are compounds of carbon.

4. What is protein like?

The group of proteins is much bigger than that of carbonyarate, and, moreover, it is difficult to grasp a nature common to all the kinds. Now, let us gather various kinds of protein contained in food.

Experiment: Soak soy-beans thoroughly in water. Grind them well and boil, adding water. After filtering them with a cloth bag and removing, add bittern to the liquid filtrate. You will have a white lump. The lump is mostly protein which is called soy-bean casein. For making bean curd, we put the white lump in a cloth-lined box having small holes on its four sides, press the lump with a lid and drain the water..

DECLASSIFIED E.O. 12065 SECTION 3-402/NNDG NO. 775013

You are probably aware of the fact that the dough of bread becomes gummy while it is being kneaded. The gummy substances is what we call gluten which is the protein of flour. Now, let us pick up the gluten and examine it.

Experiment: Knead flour with a little water. While kneading, it will become gummy. After kneading it well, wash it with water. The starch will flow away becoming white water,* and leaving a substance which looks like birdlime. Observe it carefully as it is the gluten.

For making baked "Fu" or cracknel, add flour to the gluten obtained and bake it, adding some bicarbonate of soda for the purpose of having it rise.

The casein of soy-bean and the gluten of wheat are both protein found in the seeds of plants. However, seeds are not the only thing that contains protein. Things that exist in the cells of various parts of plants and make a lively activity are mainly composed of various kinds of protein. Man and animal are similar in this point. Muscle, brain, stomach, intestines and blood all have protein as their main ingredient. Fatless beef, pork, fish meat or fish galantine "Kamaboka" are foods which resemble the muscle of animal. When water is removed from these foods, the greater part of the remaining portion may be called protein itself. The white of erf is protein which is dissolved in water. It congeals when boiled. Congealing by heat is a characteristic which can be seen also in various other kinds of protein.

Experiment: After adding a caustic soda solution to protein, add copper sulphate solution (approx. 1%) drop by drop. A purple hue will appear. Do this experiment on various kinds of protein.

Experiment: Protein turns yellow when boiled with thick nitric acid. (The thick nitric acid, like thick sulphuric acid, is a strong reagent that makes clothes rotten, so be careful to hold it clear of other things when you use it.)

Experiment: Protein produces ammonia when heated with soda-lime. The ammonia is identified by a wet, red litmus paper since the paper turns blue when it meets ammonia.

Ammonia is a compound of nitrogen and hydrogen.**

Now we can see that it is because of nitrogen in protein that the ammonia is produced. Protein is made of carbon, hydrogen, oxygen and sulphur, in addition to nitrogen. But the ratio of the ingredients is not so simple as in

Footnotes: *When the white water is kept still, the starch settles down to the bottom. It is dried and named "Shofu" and used as paste.
**The molecular formula of ammonia is NH_3.

DECLASSIFIED E.O. 12065 SECTION 3-402/NNDG NO. 775013

the case of fat or carbonydrate. Protein differs markedly from fat or carbonydrate in that it contains nitrogen and sulphur. Furthermore, casein in milk contains phosphorus in addition to the five elements, and some protein in the blood contains iron.

Experiment: Slowly bake protein and pay attention to the smell and also to the appearance of carbon.

Protein, too, is decomposed by enzymes. When we eat meat, enzymes in our digestive juice decompose protein and make it digestible so as to facilitate absorption. The pepsin which is sold as a digestive medicine is such an enzyme taken out of the cow's gastric juice. Make the following experiment if you can secure pepsin:

Experiment: Put protein into a solution which is made slightly acid by thin hydrochloric acid. Add a small quantity of pepsin and leave it for a while. Observe change in the meat.

You must have heard about amino-acid-soy. It is a soy made with amino acid as its material, and the amino acid is made by decomposing with hydrosulphuric acid the protein contained in soy bean or fish meat.

This method is quite different from that for making the ordinary, traditional soy.

Amino acid is contained in ordinary soy, too. It is found also in bean paste, and accordingly is in bean soup. The amino acid is produced from protein contained in soy bean or wheat, the material of soy or bean-paste. Protein is decomposed and changed into amino acid by enzymes or micro-organisms. The taste of soy and bean-paste originates in this amino acid. It is Dr. Kikunaye Ikeda, chemist, who discovered this to be the source of the taste. Dr. Ikeda wrote his biography under the title of "The Reason for the Invention of Aji-no-moto (Name of a product sold as seasoning)". Here, part of it is cited in easy expression:

"In the 40th year of Meiji, my wife bought a lot of a good mixture in an exhibition. Looking at the mixture, I thought, 'Pretty colors that please our eyes and nice perfumes that flatter our noses are abundantly produced by chemical industry, but products that appeal to our taste are almost non-existent except such poor sweets as saccharine. If I study the ingredient that produces the main taste of the mixture, it will help to make up for this defect.' So I took the mixture to the

DECLASSIFIED E.O. 12065 SECTION 3-402/NNDG NO. 775013

laboratory, analyzed it, removed sticky substances and again removed inorganic salts and mannite in the shape of crystals. I found, however, that something that produces taste still remained in the fluid. I tried one way and another to extract it, but failed. I gave up the work temporarily as I was busy in other research.

"In the next year, the 41st year of Meiji I read an article stating that good taste stimulates the digestion of food. I had been worrying about the lack of nutrition of the Japanese and had been trying in vain to find a way to improve the situation. The article induced me to make up my mind to resume the research which had been held up since the previous year, because I became aware that a way to attain my purpose would be to produce a cheap, tasty seasoning that makes foods delicious which are rich in nutriments but are not tasty..... The inquiry into the main ingredients that produce taste succeeded with unexpected ease. I added plumbic chloride to the remaining juice mentioned above (It was made from about 83 pounds of the mixture), and the question was solved when I obtained 30 grams of glutamic acid from the sediment produced. After that, my research was merely to decide the most advantageous way or manufacturing and the most convenient shape for use, so from an academic point of view my invention was a very simple matter."

The glutamic acid is a kind of amino acid, and we have many kinds of amino acids. As the starch becomes glucose when decomposed, so the protein becomes amino acid by decomposition. It can be also said that various kinds of amino acids combine to make several kinds of proteins.

Although we simply say protein, we find there are numerous kinds of them when we consider the combination of amino acids that compose proteins. The protein of beef differs from that of rice, and beef is composed of several kinds of protein.

When we eat the protein of beef, it is decomposed by our digestive juice and becomes amino acid or simple mixtures of amino acids. It is said that the amino acid, after having been absorbed, is again made into protein that builds our bodies. The protein of beef, fish, cow's milk and eggs much more resemble that of man's body than vegetable protein. It is because it exists in animal bodies. Therefore, it may be said that to obtain amino acid necessary for making protein of the human body from amino acid contained in protein of animal

DECLASSIFIED E.O. 12065 SECTION 3-402/NNDG NO. 775013

is simpler and more useful than getting it from the protein of soy bean or rice. The reason that the protein of rice is inferior to that of meat is because it contains only a small quantity of certain amino acids necessary to compose protein of the human body. Vegetable foods, when compared with animal ones, are much less in quantity of protein. Therefore, if we eat only rice and vegetables and still want to avoid the shortage of protein, we shall have to eat a lot of them.

Can you answer the following questions? Mark the right answers.

1. Dr. Kikunaye Ikeda is a (literator, physicist, chemist).
2. Amino acid is produced by the decomposition of (carbohydrate, fat, protein).
3. (Glucose, butter, lactose, starch, rape-seed oil) are carbohydrate.
4. (Casein, fruit sugar, sesame oil) are protein.
5. Cow's milk contains (starch, lactose, sesame oil).

QUESTION 2

HOW MUCH HEAT DOES FOOD PRODUCE?

1. What is the relation between work and heat?

Have you ever seen in a railway station a group of sweating coolies pushing a freight wagon separated from a locomotive? The scene will teach you that even pushing a freight wagon sluggishly is very hard labor. Then, what great power is produced and what great work is done by a locomotive that pulls a long train of heavy wagons! Where does that power come from? Where is the source of that work? It would be needless to say that it comes from coal which is the fuel of the locomotive. The coal burns, emits heat and boils water with the heat. Water absorbs heat and becomes steam. As it changes itself from water to vapour, or from liquid to gas, it suddenly increases in volume. If we try to confine it to the narrow place which it once occupied when it was water, it will repulse with a great force. It pushes a piston with this force. A wheel that is connected to the piston revolves. The locomotive moves, and the freight train runs. Great work is done by the train. Now, if we directly link the beginning and the end of this chain of change we know that heat has turned into work. More fuel produces more heat and does more work. If we want much work to be done we had better purchase coal that produces much heat. In answering the question, "Is this coal good

DECLASSIFIED E.O. 12065 SECTION 3-402/NNDG NO. 775013

or bad?", the most important thing is to know how much heat can be produced by a given weight of coal.

What do we eat foods for? You may answer, "I eat because I want to eat". You are not mistaken, but if you study the question you will also know that eating is to get heat that keeps the temperature of the body to enable you to do work and to obtain materials that build up your body. Food has a role which is equivalent to that of coal for a locomotive. In order to know how much work can be done by food, we must measure the heat that can be produced by it.

Just as we burn fuel and measure the heat produced, we burn food and measure the quantity of heat produced. For measuring the heat we use a calorimeter as illustrated. It is doubly covered by walls to prevent the communication of heat. We have a sufficient amount of oxygen into the middle box, burn food in it, let the surrounding water absorb the heat produced, read the temperature of the water on a thermometer and calculate the quantity of heat. The quantity of heat that raises the temperature of 1 kilogram of water by 1 degree is called 1 calorie. (With regard to the caloric of food, kilocalorie or major calorie is used, and it is simply called Calorie). Suppose 1 gram of sugar burnt in the box raised the temperature of 1 kilogram of outside water by 4 degrees from 15 degrees to 19 degrees, the quantity of heat absorbed by the water is 4 calories. In short, 1 gram of sugar was burnt and produced 4 calories.

Bomb calorimeter

2. The quantity of heat produced by the ingredients of food.

The calorie which can be obtained by a certain kind of food must be found by dividing the food into such ingredients as carbonyarate and protein and adding up the calories produced by each element.

Now let us divide the ingredients into the six kinds: protein, fat, carbohydrate, ash, water and vitamin.

Water: Water is contained in considerable amount in any kind of food and it is indispensable for nutrition, but it does not produce any heat, because, needless to say, it does not burn at all.

Ash: We already learned that ash is what remains after food is intensely heated and burned out. It is clear that it does not burn any more, so it has

DECLASSIFIED E.O. 12065 SECTION 3-402/NNDG NO. 775013

nothing to do with heat.

Vitamin: Vitamins have an important role in nutrition, but their quantity, or weight, is so small that a small very sensitive scale cannot feel them.

1 milligram is 1/1,000 of 1 gram. And 1/1,000 of 1 milligram, or 1/1,000,000 of 1 gram, is called 1 gamma. The quantity of vitamins contained in food is so small that it is convenient to show it in such a small unit as this. Therefore, it is out of the question to take up the quantity of heat of food.

Now, the question is with the other three, protein, fat and carbohydrate. It was already explained that each of the three elements has many companions respectively. Things will be much more complicated if each of the companions produces different quantities of heat. Fortunately, the calories produced by them are so well balanced that we can summarize them in each group of protein, fat and carbohydrate. The members of each group have another point in common. It is that they have the same conductivity of heat. It is miraculous, is it not? If you think it wonderful, try to investigate it.

When we put protein in a calorimeter and measure it we can know the calories produced, but calories as much as that cannot be produced in our bodies, because our bodies do not do the same work as a calorimeter. Foods that enter the body must be digested and absorbed, otherwise they are useless. Now let us exclude the portion which is not digested. The values will be as follows if the indigestive portion is deducted:

Protein	4 calories per 1 gram
Fat	9 calories per 1 gram
Carbohydrate	4 calories per 1 gram

Therefore, when we know the percentage of these three elements contained in a food, we can figure out immediately the quantity of heat produced by 100 grams of that food eaten. See the followin example:

	Water, %	Protein, % Calorie	Fat Calorie	Carbohydrate, % Calorie	Calorie in 100 gr.
Milk					
Refined Rice					
Boiled Rice					
Sweet Botato					

DECLASSIFIED E.O. 12065 SECTION 3-402/NNDG NO. 775013

Table - Ingredients of Food.

Ingrecients	
Name of food	
Uncleaned rice	
Bean curd	
Radish	
Carrot	
Sweet Potato	
Sardine	
Salmon	
Chicken	

Can you answer the following questions?

1. The source of power that moves train is wheel. Answer - Right / Wrong

2. The source of power that moves train is coal. Answer - Right / Wrong

3. Coal that produces much heat is good / bad. Answer - Good / Bad

4. Calorimeter is to measure temperature / calorie Answer - Temperature / Calorie

5. Connect the following six words correctly:

1 gram of protein		4	
fat	produces	4	calories.
carbohydrate		9	

QUESTION 3

HOW MUCH SHOULD WE EAT?

1. How many calories are needed each day?

How many calories are we consuming a day? If we do not recruit the calories to be consumed with food, what is in our bodies will become smaller and smaller. In other words, we shall become thinner and thinner. Therefore, it is necessary to know the calories consumed in a day.

If we keep ourselves quiet, we need only a few calories. If we work hard, the need for calories increases accordingly. If we lie in bed and keep quiet a minimum quantity of heat is consumed. Still, part of the muscles are in action, the temperature of the body must be maintained and the heart cannot

DECLASSIFIED E.O. 12065 SECTION 3-402/NNDG NO. 775013

take rest, and so we need calories after all. The calories consumed in this condition may be the minimum necessary for living. The method of measuring it is similar to the use of the calorimeter. We put a person in a closet leaving him there for some time and supplying him with oxygen, let the water absorb the heat discharged and measure the rise of temperature of the water. However, although this method is principally simple, it is difficult to use it for practical measurement. So, the following method is usually adopted: When the ingredients of food change to heat in the body, as in the case of coal burning, they always combine with oxygen, produce heat and discharge the carbon dioxide produced by burning from the mouth and nose through the lungs. Therefore, in this way we measure the quantity of oxygen inhaled, the quantity of carbon dioxide discharged and also the quantity of nitrogen which appears in urine as a result of the consumption of protein, and from these values figure out the calories consumed. If we use this method to measure the calories consumed when we lie still, we shall find that a grown-up Japanese man requires 1200 - 1400 calories a day. This is the minimum calories only for living. The necessary calories like this differ by age, sex and the size of the body. More calories are needed by working grown-ups than by old people and children, by men than women, and by big persons than by small persons.

Calorimeter of man's body.

Suppose a man weighing 50 kilograms requires 1200 calories a day as his minimum requirement. He needs 1200 ÷ 24) - 50 calories per one hour, and so he needs 1.0 calorie per hour per 1 kg. of weight. Therefore, you may consider that the figures in the table show the calories consumed per hour per 1 kg. of body weight.

Action	Ratio of Calorie
Laying still without taking food	1.0
Laying still taking food	1.1
Sitting in easiness	1.4
Sitting while talking	1.5
Washing dishes	1.6
Walking (1 kilometer per hour)	2.0
Walking (4 " " ")	2.8
Walking (6 " " ")	4.3

DECLASSIFIED E.O. 12065 SECTION 3-402/NNDG NO. 775013

Action	Ratio of Calorie
Walking (3.5 kilometer per hour)	6.3
Running (aitto)	8.1
Light labor (Machine sewing, dusting)	2.4
Middle labor (Carrying of baggage)	4.4
Heavy labor (Ploughing, sawing of lumber)	6.4
Especially heavy labor (Driving of piles)	8.6
Sleeping	0.9

Now, let us calculate how many calories are needed for a days living by a man weighing 50 kilograms.

Action	Hour	Necessary calories (Unit calorie x weight x hour)
Sleeping	8	0.93 x 50 x 8 = 375 calories.
Rest	6	1.5 x 50 x 6 = 450 calories
Walking	1	2.8 x 50 x 1 = 140 "
Light Labor	6	2.4 x 50 x 6 = 720 "
Middle Labor	3	4.1 x 50 x 3 = 615 "
	24	2600 calories

The value of 2400 calories which is said to be the standard calorie requirement for a day by a grown-up man is obtained in this way. 3000 - 3500 calories are considered to be normal for farmers who engage in brisk work.

Follow the above example of calculation and figure out the calories necessary for your day's living. Then compare it with the calories of food you are eating in a day and see if it is balanced.

Standard Calories Necessary for a Day

Age	Male	Female

2. How much food should we eat each day?

Suppose we obtain from rice only 2400 calories which is the standard number of calories for a day. We need about 700 grams (5 Go) of rice (2400 ÷ 340 = approx. 700 gr.) as the rice produces about 340 calories per 100 grams.

Suppose the ration of rice is 350 grams and we fill the shortage of 350 grams with sweet potato. We need about 1 Kg. of it. If we eat 500 gr. of potato and get the rest with soy bean we shall need 150 grams of bean. Again, if we eat only 75 grams of beans and replace the rest with egg, we shall have

DECLASSIFIED E.O. 12065 SECTION 3-402/NNDG NO. 775013

to eat three eggs or 170 grams.

3. What will be the result if the calories taken are more or less than the calories consumed?

When what is taken is too much to consume it is stored in the body. First, carbohydrate becomes glycogen (Glycogen is composed of glucose and is named animal starch) and is stored in the liver and muscles and, when no more can be stored there, it is composed into fat and stored as subcutaneous fat. When too much fat is eaten, it is immediately carried to subcutaneous fat. When protein is too much, it is changed to heat, then to fat and carbohydrate and these two are stored in lieu of protein since in the body there is no place to store protein. In case of children, however, the surplus protein is used to build up their bodies. Thus, if the stock in the body increases or new things are created by growth, the weight will increase accordingly. Suppose a surplus of 200 calories is taken every day and is stored as fat, the weight will increase by 8 kilograms in a year. Foods that produce 200 calories are 56 grams (4 Shaku) of rice, one piece of bean curd, two eggs, 50 grams of sugar and 1 "Go" of Japanese wine.

When the calories taken as food are much less than the calories consumed, an adverse course is taken. First, glycogen changes to heat and, if it is not enough, the fat of the body changes to heat causing a gradual decrease of body weight. The weight does not decrease immediately, but is maintained for some time as the fat consumed is replaced by water. If the shortage of food continues, however, water alone cannot keep up the weight and the body becomes thinner. Protein is used last of all as it is an important thing that composes the body.

A survey of these facts will induce you to think that the human body is naturally very cleverly devised. Why can we not get along satisfactorily eating what we naturally want to eat? Maybe you eat because you want to eat and because you feel hungry. Such a way of eating will keep up almost satisfactorily your daily living related to meals, but you cannot always be safe. Why not? One of the reasons is that, as stated in the beginning, it is now impossible for us to obtain from what we naturally want to eat as much as we want to eat. Few people are suffering from lack of nutrition when unprocessed or slightly processed food is eaten freely and abundantly. Another

DECLASSIFIED E.O. 12065 SECTION 3-402/NNDG NO. 775013

reason is that although the calories needed by our bodies are almost always conditioned by our appetite or hungry feeling, such feeling does not always indicate the necessary calories. The feeling is not directly connected with the calories of food or the calories needed by our bodies. If we take foods of the same calories, foods that stay long in our stomachs make us feel satisfied longer than food that passes quickly. If we eat food which has few calories we feel we are full inside when our stomachs are filled up. Some people say that many fat men are found among drinkers and that is because they take too many calories since wine is quickly absorbed and does not stay long in the stomach. From the point of necessary calories, they should cut down their rice by what is taken as wine. The foods taken by the Japanese contain much carbohydrate and small fat and their calories are few for the volume. Therefore, we are short in calories if we are full inside and, if we eat to take enough calories, we shall overburden our stomachs with too much food. So, it is necessary for us to think out a way to take more fat.*

As the third reason we can mention the fact that man's faculty of selecting food is different from that of animals. Animals in general live in a natural environment and get along safely eating what they want as much as they want. It is said the reason is that animals wanting protein are blessed with the faculty of selecting foods rich in protein and those that want vitamins are blessed with the faculty of selecting foods containing many vitamins. But man does not have a faculty as keen as theirs. Furthermore, wild animals eat natural foods raw, while man who leads a civilized life eats boiled, roasted or treated foods and, as the civilization develops, man's living related to meals is more and more kept aloof from nature and it has become impossible for man to lead a simple life based upon instinct like animals.

Now, although it makes no great mistake to eat what we want as much as we want, we shall be able to grow up safely and in good health if we add nutritive knowledge to our instinct.

Can you answer the following questions? Mark the right one in the brackets.

1. Calories needed for walking are (more, less, same) than (as)

Footnote: *What is closely related with appetite is the feeling of hunger. It is felt after illness, when we meet an accident in the mountains or on the sea or when we have a shortage of foods in war-time. It does not come from the condition of the stomach but from the condition of the whole body which extremely lacks nutrition.

DECLASSIFIED E.O. 12065 SECTION 3-402/NNDG NO. 775013

what is needed by running.

2. Grown-up people require (more, less, same) calories than (as) children.

3. Men require (more, less, same) calories than (as) women.

4. The standard of necessary calories for a grown-up Japanese man is (500,1000, 2400, 6000) calories.

5. It is generally noticed that foods of the Japanese contain much (fat, carbohydrate, protein). Basic.

QUESTION 4.

IN WHAT WAY ARE THE INGREDIENTS OF FOOD USED IN THE BODY?

1. What is the use of protein, fat and carbohydrate?

The human body is composed of 60 - 65% of water, 25 - 30% of carbonic compound (A compound which, like protein, fat and carbohydrate, contains carbon as its ingredient).and ash which occupies the remaining portion. The greater part of this carbonic compound is protein. Protein is contained in muscle, brain, stomach, intestines, heart and also in bone, skin, nail, hair and blood. Protein exists almost everywhere in the body. Boys and girls who are in any stage of growth must grow every portion that composes their bodies. For doing so it is necessary to quickly make protein which becomes their muscles, stomachs and brains. The material that composes protein is amino acid. The amino acid is what is made when protein, which is taken as food, is decomposed. Protein in the food is used for this purpose. It is impossible to replace protein with carbohydrate or fat, for protein (also amino acid) contains nitrogen, while fat and carbohydrate do not, contain it.

Even fully grown-up men must always add new things to their bodies as what constitutes their bodies is partially broken down by everyday use and for this reason protein must be supplied continuously as food.

(Protein is not only useful for building up the body, but it is also burned for producing heat.)

Fat and carbohydrate taken as food are mostly used to produce heat. They change to heat to maintain the temperature of the body and they also become the source of power for work. When used as the source of heat, fat produces 9 calories per 1 gram, so it is more than twice as useful

DECLASSIFIED E.O. 12065 SECTION 3-402/NNDG NO. 775013

as protein and carbohydrate. Among carbohydrates, sugar is soluble in water and so it is immediately absorbed and rapidly used as heat and starch is nearly as readily available. It has already been stated that while fat and carbohydrate are used as the source of heat, they are stored in the body when left over. It is impossible to make protein out of fat and carbohydrate, while it is possible to make fat and carbohydrate adversely from protein. The illustration shows with arrow-like marks the possibility of changing into another substance.

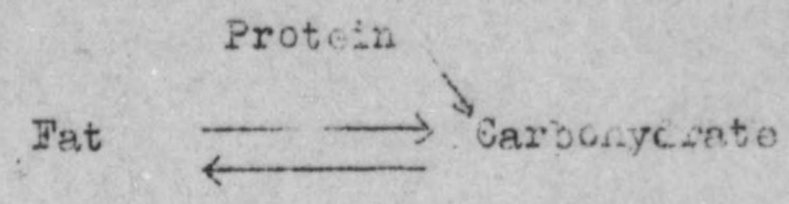

As the body has the faculty of changing substances it can get along if all the fat and carbohydrate in food are changed to heat and work.

Then, maybe we must eat protein for which we have no substitute. But how about fat and carbohydrate? Can we get along without taking them? Eskimos who live at the north pole live only on fish meat and animal meat, so they take mostly protein, fat and carbohydrate. When heat is taken from protein, there is produced unnecessary things which must be discharged as urine. If they accumulate in the body they cause poisoning. The kidneys which engage in the restless work of filtering them and making urine will be tired. It is said that the majority of Eskimos have bad kidneys.

If other substances are available, it is not impossible to breed test animals omitting either fat or carbohydrate, but it is very difficult.

Therefore, it may be said that we cannot take complete nutriments from foods if they lack any one of: fat, protein and carbohydrate. So, our problem is to know in what ratio these three elements should be contained in our daily meals. With regard to the ratio, an example is mentioned below. It is taken from the average food of Americans (1), Europeans (2) and the Japanese (3).

	(1)	(2)	(3)
Protein	15 - 20%	18%	15%
Fat	15 - 20%	8%	3%
Carbohydrate	70 - 60%	74%	82%

We learn from this table that the custom of taking food is different for different nations. The table also shows that the food of the Japanese

DECLASSIFIED E.O. 12065 SECTION 3-402/NNDG NO. 775013

is, when compared with others, less in protein and fat but much more in carbohydrate. Those who take many vegetables have a much greater ratio of carbohydrate. Is this all right?

The results of animal tests show that animals grow satisfactorily on foods which have much fat and small carbohydrate only when the fat is of good quality, for instance, in butter. They will die if ordinary natural fat or artificial butter is given very much. This is because such fat generally contains harmful ingredients. Therefore, taking lots of fat without paying attention to its quality must be avoided.

Next, protein, too, is too small in the food of the Japanese. How much protein should we eat in a day - protein which cannot be substituted with other elements?

2. How much protein should be eaten each day?

As long as we live, protein which composes our bodies is worn out by operations of machines in the body. The quantity of protein consumed for this purpose can be ascertained as its loss shows in the urine. It is known by calculation that it is almost enough for a man weighing 50 kilograms to eat about 50 - 60 grams everyday. It would be better to obtain about one-fourth of this amount from such animal protein as fish meat, animal meat, egg and milk.

In order to obtain 80 grams of protein from rice only, we have to eat 1.1 kilogram (approx. 8 Go.). As only 25 grams of protein is obtained from the daily ration of 350 grams (approx. 2.5 Go) of rice we must fill the shortage of 55 grams with some other foods. If we eat 50 grams of soy bean, the half of it or 25 grams can be taken as protein. 100 grams of fish or meat will give us about 20 grams of protein, and one egg will give us about 7 grams of it. The total of them will be as follows:

		Protein
Rice	350 gr.	25 gr.
Soy Bean	50 "	25 "
Fish Meat	100 "	20 "
Egg	1	7 "
		77 grams

3. What is the use of ash and how much of it do we need?

Ash cannot be the source of heat since it is what remains after food is

DECLASSIFIED E.O. 12065 SECTION 3-402/NNDG NO. 775013

burned. Still, it is important as, together with protein, it constitutes the body. As in the case of protein, it is necessary to send ash to the body as a material to make growing parts and to recruit it as a material to repair broken parts.

To know what and how much is necessary as ash, it will be helpful to investigate what elements and how much of them are contained in the body.

Elements in Human Body

Elements	Quantity contained %	Elements	Quantity Contained %
Oxygen		Calcium(Lime)	
Carbon		Phosphorus	
Hydrogen		Potash	
Nitrogen		Sulphur	
Chlorine		Iodine	
Sodium (Soda)		Cobalt	
Magnesium		Zinc	
Iron		Others	
Manganese			

Among these elements, oxygen, carbon, hydrogen, nitrogen and sulphur can be taken as protein, fat and carbohydrate. Other elements must be obtained mostly from ash that exists in food. What is contained in large quantity in the body other than the first five elements are calcium and phosphorus. Calcium mainly composes bones and teeth. It is important for boys and girls who are growing to take in these two elements in large quantity as they must make their bones bigger. It will be too late to take the elements after the period of growth is over. Half of the ash in milk is these two elements. You will see that materials which make bones, materials which are greatly needed by the body, are thus prepared for readiness. Milk is a good food for calcium.

Further, ash is dissolved in large quantity in blood and is doing an important work. It is because particles with a red hue which are called red corpuscles are floating in the blood that it looks red. The red corpuscles contain iron and are playing a role to receive in the lungs the oxygen in the air, send it into the body, receive carbon dioxide there and carry it to the lungs to discharge it outside.

DECLASSIFIED E.O. 12065 SECTION 3-402/NNDG NO. 775013

Experiment: Put a bit of blood on a plate glass and see the red corpuscles with a microscope. You need not take your own blood. Blood of frogs, fish, birds, mice and others will also do.

Red corpuscles illustrated.

Experiment: Put blood into two test tubes. Dilute one about four or five times with water and dilute the other with 0.9% salt water likewise. As blood needed for the experiment is not so little, look for the opportunity of securing the blood of a chicken, rabbit or cow.

When blood is thinned with water like this, the blood which is not transparent becomes transparent. It is because the thin membranes of red corpuscles are split and broken. On the other hand, red corpuscles diluted with salt water are not broken. In blood such elements as sodium, potash, chlorine, phosphorus, magnesium and calcium are dissolved and the thickness of the whole is the same as that of 0.9% salt water. If 0.9% salt water is added to blood, it does not make the blood thinner, while plain water dilutes blood and breaks red corpuscles. If you lick blood you will find it is salty. It is because salt is contained in blood. Other elements are also contained in blood. They are all to prevent the breaking of red corpuscles. This is one of the important roles of ash contained in blood.

In addition to the above role, ash is doing work to keep blood neutral. When blood becomes acid or alkaline it does not work well and it even threatens life. As blood is apt to become acid we must take food containing much of such elements as calcium in order to neutralize acid and keep blood neutral at all times.

Further, when we become thirsty and want to drink water after eating salty food, it is for the purpose of diluting the thick salt in the blood to the thickness of 0.9% salt water.

The elements of ash must be recruited constantly, because they are consumed and discharged as sweat, urine and dung while the body is alive and working. You need not pay attention to all the elements shown as ash since they are contained in the foods we usually eat. What is important is only to be careful to eat elements which are apt to be lacking in the body. What we especially need are the three elements of phosphorus, calcium and iron. In addition to these, about 15 grams of salt is required a day. Among the above

DECLASSIFIED E.O. 12065 SECTION 3-402/NNDG NO. 775013

three elements, calcium is apt to become short unless we make a point of taking it. It would be better to try to take 0.90 grams of calcium a day. However, calcium contained in rice is only 0.01 gram per 100 grams, and, therefore, we shall need as much as 9 kilograms of rice if we try to take it only from rice. It is absolutely impossible to eat as much as that, and so we must look for something which has much calcium. It is green leaves, such as the outside portion of cabbage, leaves of radish or spinach. It is also good to eat the bones of boiled or dried small fish.

Boys and girls who are in the period of growth, pregnant women and mothers who give milk to babies must try to take much more calcium and phosphorus that compose bones.

Iron is important as the ingredient of the red color in the blood. It is this red color that performs the main role in the function of blood, so the shortage of iron will cause a serious situation.

Quantity of calcium in 100 g. of foods

Beef	Apple
Hen's egg	Inside leaves of cabbage
Uncleaned rice	Outside leaves of cabbage
Cleaned rice	Leaves of radish
Wheat	"Daikon" (A kind of radish)
Flour	Soy Beans

4. What is the use of water?

In all kinds of food, water is contained as an ingredient. Rice and wheat which apparently seem to have no water have 14 - 15% of water in them. You may consider that 80 - 90% of juicy vegetables and fruits is water. Almost all the foods are taken from animals and plants, and the animals and plants cannot live without water. Therefore, it may be said that there is almost no food that does not contain water. Two-thirds of the body is water. Since man is a living creature, all the functions of the body will stop if no water is obtained. When we consider the function of water in relation to nutrition we find that water is needed to swallow food, that digestion is to make food soluble in water, that food is not absorbed unless it is dissolved in water, that water is necessary to carry nutriments and that, as known from sweat and urine, water is necessary to discharge unnecessary things. However, water does not attract our

DECLASSIFIED E.O. 12065 SECTION 3-402/NNDG NO. 775013

attention as it is usually obtained too freely. We drink four or five glasses of water every day, in addition to water contained in foods.

Of the ingredients of food, protein, fat, carbohydrate, ash and water have so far been introduced here. There is one thing left. It is vitamins, which, although contained in especially small quantity, have an important role to play. We shall take up vitamins as a separate problem.

Can you answer the following questions?

1. Among the following words, mark what constitutes the body:

   Stone Wood Paper Calcium Protein Sand

2. Among the following words, mark what contributes to heat in the body:

   Carbohydrate Salt Sugar Water Protein Fat

   Bicarbonate of soda Caustic soda

Among the following words, mark what you think right:

3. Generally, food of the Japanese is especially abundant in (fat, carbohydrate, protein).

4. It is best for the Japanese to take especially the food containing much (magnesium, calcium, protein).

5. Milk is a good food to give (lead, gold, calcium, sodium).

QUESTION 5

WHAT ARE THE USES OF VITAMINS?

1. How beriberi was cured.

It was about the 20th year of Meiji. In those days, when Japanese battleships went to sea for long-range cruises nearly half of the crew were attacked by beriberi and many of them died. At that time beriberi was thought to be a contagious disease, so the ships were disinfected and sanitary facilities were improved, but no effect was seen. Learning that no such disease prevailed in the navies of foreign countries, surgeon general Baron Kanehiro Takagi thought, "It may arise from the difference of food". So, he increased protein, replaced refine rice with barley, added meat, fish and vegetables and greatly improved the food. The result was splendid, for in a few years patients decreased from 2000 to only a few. It was decided that barley was good for beriberi, but people were unable to locate the reason why it was good.

Dr. Umetaro Suzuka, chemist, who discovered vitamins and invented

DECLASSIFIED E.O. 12065 SECTION 3-402/NNDG NO. 775013

"synthetic wine" tells as follows in an article entitled "Looking Back at the Study of Vitamins"; "When I lectured on protein shortly after my return from Germany, Baron Takagi was among the audience and told me, 'It is an interesting story. This is the first time that I have known that the nutritive effect differs according to the kind of protein. I think the protein of rice may be different from that of barley. I hope you will investigate this point'. In order to define how the nutritive effect differs with the kind of protein, animal tests were absolutely necessary. As I studied agricultural chemistry, I knew the fertilizer test of plants. It is called water culture. The plant is soaked in pure water in which nourishing elements such as ammonia, phosphoric acid, potash and lime are dissolved in certain quantity. The plant grows well in the water, but if any one of the nutriments is lacking, growth immediately stops and sometimes the plant dies. If, for instance, phosphoric acid is short, the leaves will turn yellow and die. The same experiment can be made by sand culture which is a method of cultivating plants in the sand and giving various nutriments. I thought that animals could be bred likewise by an artificial feed composed of pure protein, fat, carbohydrate and mineral elements (ash) and that different degrees of growth would be shown by them if the feed given were varied, giving them sometimes protein of rice and sometimes protein of meat. So I tested pigeons and mice in this method, but contrary to my expectations they could live for only a few weeks on such feed. The result was the same although I tried over and over again. I could not find out the reason at all. But, later on I found that a special element is contained in bran. I added it to the composed feed, and the animals grew well. In those days, bran was considered something like chaff. It was used for feeding cattle or for fertilizing purposes and it was never thought to be the food of men. I ascertained that the same effect could be obtained by adding an alconolic infusion of bran (the part of bran that dissolves in alcohol is extracted and used), instead of adding the bran as it was, and I found there was an element which had been unknown before. It was oryzenin. (Oryzenin was later shown to be vitamin B_1. Since I was fully convinced, I made this discovery public at the Tokyo Academy of Chemistry in the winter of the 43rd year of Meiji (1910) and insisted that it was because of the shortage of oryzenin that animals fed with refined rice lived so short a time and that oryzenin was

DECLASSIFIED E.O. 12065 SECTION 3-402/NNDG NO. 775013

indispensable for the growth of all animals. This discovery was the basis of today's vitamin theories. However, since few of the chemists and physicians of the time had the idea of nutrition, my opinion was given almost no attention. Only Dr. Kikunaye Ikeda told me, 'If it were true, it would be a matter of great interest.'. . . . . " (The article by the doctor was rewritten in simple language).

The effect shown by the improvement of food in the navy was, after all, due not to protein but to the substance in question which was contained in a very small quantity. The substance that cures and prevents beriberi is nothing else than vitamin B_1 which is about to be introduced here. Only 3 grams of pure B_1 can be obtained from 1 ton of rice bran, but it works splendidly. 5/1,000,000 grams or 5 gamma of it is enough to cure a pigeon which is dying from intense beriberi. If we put it into the bill of the pigeon, the pigeon will recover in a few hours.

A grown-up person needs about 1 milligram of B_1 a day. Without B_1, carbohydrate cannot change itself completely to heat in the body. Therefore, the more starch we eat, the more B_1 we need. It is also needed for changing protein into heat, for protein changes to carbonydrate first and then the carbohydrate changes to heat.

The shortage of B_1 causes beriberi. In the case of children, the shortage causes infantile beriberi. Even when it is a little short we lose appetite, feel languid and feel very tired after work. If it is short much more, we feel our limbs are asleep and we cannot sleep.

B_1 has no place to be stored in the body like vitamin A, and so it comes into the urine when some is left over. Accordingly, we cannot take a lot of B_1 at one time. It is important to take an average quantity everyday. B_1 is widely contained in plants and animals. It is found in rice, barley, vegetables and meat.

Uncleaned rice contains so much B_1 that it will be enough to eat 300 grams (a little more than 2 Go) a day. But when rice is cleaned B_1 is decreased. Although cleaned or refined rice contains a little B_1, the B_1 disappears while the rice is being washed prior to boiling. The greater part of B_1 is contained in bran. B_1 of other cereals decreases a little when cleaned, but the decrease is not so much as in the case of rice.

In the case of barley, B_1 does not disappear at all even when it is fully

DECLASSIFIED E.O. 12065 SECTION 3-402/NNDG NO. 775013

cleaned. This is because the barley contains B_1 also in its grain. This is the reason why barley meal was effective for the prevention of beriberi.

An especially large amount of B_1 is contained in the embryo of rice. The quantity contained becomes less in the order of barley, wheat and corn. It is almost non-existent in the embryo of soy bean.

In other portions of soy bean there is much B_1, but there is almost none of it in bean paste, soy and bean curd which are made from soy bean. Much of it is contained in peanuts, especially in its inner skin. Pork, although it is meat like beef and horse meat, has much more B_1 than the others because the pig eats much grain.

Quantity of B_1 contained in 100 gr. of food
In gamma units

Uncleaned rice*	Spinach
70% cleaned rice	Cabbage
Uncleaned barley	Radish
Cleaned and pressed barley	Burdock
Uncleaned wheat	Carrot
Flour	Pumpkin
Corn	Eggplant
Rice embryo	Tomato
Barley embryo	Lemon
Wheat embryo	Pear
Soy bean	Apple
Peanut	Beef
Sweet potato	Pork
Potato	Sardine

Footnote:* Decrease in weight of cleaned rice and different names given to cleaned rice.

Name	Remarks	Decrease in weight	Amount of bran	% of digestion	Weight digested in 100 gr. of uncleaned rice
Uncleaned rice	Rice from which husk is removed.				
Half-cleaned rice	50% cleaned				
70% cleaned rice	70% cleaned				
Cleaned rice	Rice from which skin, outer layer of albumen and embryo are removed				
Rice with embryo	Rice cleaned so as to leave embryo.				

DECLASSIFIED E.O. 12065 SECTION 3-402/NNDG NO. 775013

Why are the Japanese people suffering from beriberi in spite of the fact that B_1 is contained in a number of foods? One of the reasons is that we depend too much on cereals for the necessary calories and we eat cleaned rice which has only a little B_1. Furthermore, we attach no importance to side dishes and sometimes finish our meals with salted radish and boiled rice pouring tea on the rice. We consider bean curd and pickled plums are a gorgeous meal. Any one of these has no or little B_1 in it. The other reason is that our cooking is not good. B_1 is very soluble in water, so while foods are washed after being cut it dissolves a little in water. The finer the foods are chopped and the longer they are washed, the more B_1 is lost. Further, B_1 is apt to be decomposed by heat, so it is lost when boiled too long. You must pay attention to the fact that you lose all the B_1 by bad cooking even if you choose foods containing much of it. Vegetables and fruits which can be eaten raw practically, give us B_1 even if they contain not so much of it.

Mothers must be especially careful about B_1 after childbirth, for they must take more than usual of it in order to give their babies the necessary B_1 as milk. Otherwise there will be no B_1 in their milk and their babies drinking such milk will have infantile beriberi.

2. How was vitamin B_2 discovered? What is it like?

Beer yeast is now widely sold as a vitamin B product since it has much vitamin B in it. Previously, when vitamin B was needed in nutritive experiments, yeast was given to test animals. After pure B_1 was made, it was used in lieu of the yeast, but animals did not grow satisfactorily. Furthermore, sometimes their skins became dirty, their hair fell off and they also had skin diseases. Such troubles were cured when yeast was given. The yeast was effective even when its B_1 was decomposed by 120 - 150 degrees of heat. So it was found that in the yeast there was some substance other than B_1 which is resistent to heat and necessary for growth. This was defined as vitamin B_2.

The B_2 is not only more resistent to heat, but also more insoluble in water than B_1, so it is lost only in small quantity by cooking. Moreover, since it is widely found in animals and plants there is almost no fear that we lack it.

B_2 like B_1 is what we need in order to change food into heat in our bodies. More B_2 will enable the food to decompose and change to heat better.

DECLASSIFIED E.O. 12065 SECTION 3-402/NNDG NO. 775013

If we lack B_2 both ends of our lips will split and matter.

3. What is the motive of the discovery of vitamin C? What is it like?

While the Japanese sailors suffered from beriberi in ocean navigation, European sailors died of scurvy. In 1498, when Magellan first rounded the Cape of Good Hope, the southern extremity of Africa, he is said to have lost 100 men out of 160 in the voyage.

Scurvy is a disease that causes bleeding. It causes subcutaneous bleeding and makes purple marks on the skin. It causes pain in the legs and waist. It also makes the gums swell and turn purple, and eventually makes the teeth pull off. In the case of children, it makes bones fragile and breakable. If the disease grows worse, breathing becomes difficult, the heart flutters, the body is worn out and eventually dies.

Knowing that fresh vegetables, especially oranges, were effective for the disease, the British navy at the beginning of the 18th century gave the sailors 25 grams of lemon juice every day and considerably decreased the patients. Still, it is usual that the number of patients increases in the time of war or famine. It is this effective element contained in lemon juice that was named vitamin C.

Foods that contain much vitamin C are oranges (lemon, orange, mandarin orange, summer orange, citron and shaddock), green tea, radish, persimmon, laver, and all fresh vegetables. It is contained in great quantity in foods which have long been eaten by the Japanese. It was for this reason that scurvy was rarely seen in Japan.

Vitamin C is not found in cereals and beans, but it suddenly emerges when buds come out, and, therefore, sprouts of beans are good for giving C.

There is C in cow's milk as well as in mother's milk, but there is little C in milk sold in the streets. This is because C is lost by pasteurization by heat. Therefore, when giving babies condensed milk, powered milk or the milk bought in the streets in lieu of mother's milk, it is important to give them orange juice or radish juice or potato juice as to recruit vitamin C.

DECLASSIFIED E.O. 12065 SECTION 3-402/NNDG NO. 775013

Quantity of vitamin C in 100 grams of food.

In Milligrams

Spinach	Sweet potato
Cabbage (outside green leaves)	Potato
Cabbage (inside white leaves)	Apple
Radish (Leaves)	Pear
Radish (Root)	Orange (Pulp)
Stone-leek (Green portion)	Orange (Skin)
Stone-leek(White portion)	Lemon
Onion	Persimmon
Carrot	Tomato
Burdock	Laver

Calculate the amount of vitamin C in your day's food.

The necessary quantity of vitamin C is 25 - 30 milligrams per day for a grown-up person. It would be better to take about 1 milligram per 100 grams of food, and the quantity must be doubled for children.

Vitamin C can be decomposed by heat and it is decomposed when touched by oxygen. It is very soluble in water. Therefore, like B_1, it is decomposed by cooking. Fresh vegetables and fruits which do not require cooking are preferred for vitamin C. C is contained as follows in tea:

Quantity of Vitamin C in 100 grams of tea leaves and the Amount of Tea Used by a Person a Day.

In milligrams

"Bancha" or low grade tea	Powdered tea
"Sencha" or middle grade tea	Oolong tea
"Gyokuro" or high grade tea	Black tea

What per cent of 30 milligrams is obtained in the tea you use?

What is the reason that tea leaves treated by heat do not lose vitamin C?

In manufacturing tea, picked leaves are steamed with hot vapour for a short time. The enzyme in the leaves which decomposes vitamin C is deprived of its power by the vapour and so C is kept. When we make ordinary tea we do not pour boiling water on the leaves. Look at the tea set. There is a vessel to cool down the hot water. We first pour hot water into the vessel and cool it down to a certain degree and then pour the water into the tea pot. Only by doing so can we produce the delicious

Illustration of tea set

DECLASSIFIED E.O. 12065 SECTION 3-402/NNDG NO. 775013

taste of tea and at the same time have vitamin C undecomposed. In making powdered tea, too, we never use boiling water. In the case of low grade tea, C will be decomposed if we boil the tea in the tea pot on the fire. Learn the good way of making tea.

Black tea is manufactured by fermenting tea leaves. Vitamin C is utterly lost in the process.

If you powder the leaves of various plants in such a way as to manufacture green tea, it will be good for adding some more nutriments as well as for taking vitamin C.

Canned or bottled foods will keep a considerable quantity of vitamin C if we heat the goods for a short time to stop the activity of the enzymes and germs, remove the air and pack the foods.

As for the pickled vegetables which we eat every day, what is pickled for a long time has no vitamin C since it is decomposed by salting and fermentation. C also is not found in fermented foods such as bean paste, soy, Japanese beer and wine.

4. What is vitamin A like?

When we add peanut oil and fat of pork to skim milk (since fat is what is removed from milk) and breed test animals eating this food, we shall find that they do not grow well, but also have bad eyes, lose weight and die. If, however, we add a bit of liver oil to the food, they will grow well and recover from the bad eyes. From this we know that in butter there is something which cannot be found in fat of pork or peanut oil. This is vitamin A. The shortage of vitamin A makes the eyes dry or causes night blindness (the disease makes things invisible even in slight darkness in the evening). It also makes us weak against contagious disease and stops our growth.

As foods containing much vitamin A, liver oil and butter can be mentioned first. Liver oil is an oil taken from the liver of fish. Although the quantity varies with the kind of fish or the time of the year, it is considered to be contained in the liver of fish. Fish store surplus vitamin A in the liver.

In plants, there are carrots, spinach, outside green leaves of cabbage and laver which have the effect of vitamin A. What is contained in these plants is not the real vitamin A, but is a red color called caroteno which

DECLASSIFIED E.O. 12065 SECTION 3-402/NNDG NO. 775013

changes to vitamin A after it is taken into the body. Therefore, it may be said carotene has the effect of vitamin A. Even if we do not drink liver oil we do not lack vitamin A if we eat vegetables and yellow fruits. When you are told that carotene is the red color of carrot, you will understand it soon. Vitamin A also exists in yellow corn and the skin of oranges. But the color of tomato and red pepper is different. Vitamin A is found also in the green portion of plants. Carotene, like chlorophyl of leaves, is made by sunshine, so more carotene is found in thin, wide leaves than in thick leaves or leaves of thick green color. It is for this reason that it is found very much in the leaves of radish, spinach and turnip.

There is no carotene in rice, barley and beans. Accordingly, oils taken from them, such as rice oil and soy bean oil, contain no carotene.

Quantity of carotene contained in 100 grams of food

In milligrams

Radish (leaves)	Mandarin orange (skin)
"Mitsuba"	" " (pulp)
Spinach	Loquat (Skin)
Stone-leek	" (Pulp)
Tomato (Skin)	Watermelon (Skin)
" (Pulp)	" (Pulp)
Carrot (Outside red portion)	Laver
Carrot (Inside orange portion)	Tangle
Persimmon (Skin)	
Persimmon (Pulp)	

Butter taken from cow's milk has much vitamin A, while artificial butter has none of it unless liver oils have been added. Vitamin A, as well as carotene, is quite resistent to heat. Therefore, we need not fear if its effect might be lost in the temperature of ordinary cooking. It is decomposed, however, by oxygen when exposed to air. From this point you will know that vitamin A is well preserved in canned or bottled foods which are not exposed to oxygen.

2. What is Vitamin D like?

The role of vitamin D is to facilitate absorption by the intestines of

DECLASSIFIED E.O. 12065 SECTION 3-402/NNDG NO. 775013

calcium and phosphorus which are necessary to build bones, and help their normal growth. When vitamin D is short, bones do not grow well and, since only muscles grow normally, the bones cannot bear the burden and begin to bend. This is rickets (a kind of hunchback and bowed legs). To give vitamin D is of course good for the prevention and cure of the disease, especially when the intake of calcium is low. To illuminate with ultra violet rays, instead of giving vitamin D, is also effective. This is because the sunbeams, especially ultra violet rays among them, produce vitamin D in the body when they fall on it.

Rickets will be cured also by eating foods illuminated with ultra violet rays. The rays produce vitamin D also in the foods. In ordinary districts a shortage of vitamin D is rarely seen since the vitamin is produced by exposing the body to the sun. Rickets is found sometimes among the people of northern countries where the rays are weak.

Can you answer the following questions?

1. There is vitamin C in Japanese wine and beer? Answer - Right / Not right

2. Boiling vegetables well decomposes vitamin C. Answer - Right / Not right

3. Cleaned rice contains more vitamin B_1 than uncleaned rice. Answer - Right / Not right

4. There is much vitamin B in butter Answer - Right / Not right

5. Vitamins are a source of heat. Answer - Right / Not right

Mark words in the bracket which you consider suitable:

6. Beriberi is due to the shortage of vitamin.(A, B_1, B_2, C, D).

7. Scurvy is due to the shortage of vitamin (A, B_1, B_2, C, D).

8. Night blindness is due to the shortage of vitamin (A, B_1, B_2, C, D).

9. Rickets is due to the shortage of vitamin (A, B_1 C D)

QUESTION 6

WHAT CONSIDERATION SHOULD BE PAID TO HAVING GOOD MEALS?

1. Cheap, delicious and nourishing meals.

Man's lives can be summarized and expressed by wearing, eating and dwelling. Eating is one of the three elements of living. Look at the lives

DECLASSIFIED E.O. 12065 SECTION 3-402/NNDG NO. 775013

of animals and plants. The majority of their lives is for taking nutriments. Man should not do what animals and plants are doing. Man should live like man. But before leading human lives, man must live first of all. And eating is most important for living.

Do not overlook eating as a mean thing. Men and women should cooperate to set up a foundation upon which our human lives can be established. It is most important to consolidate the foundation. That is where a bright, happy home is born.

Now, then, what is the meal that makes this foundation? It is the meal that is "cheap, delicious and nourishing". Those who cook at home, those who eat at home, those who take meals in the streets, those who prepare meals, all these people are requested to keep this in mind.

All the questions we have handled so far give us a basis for thinking out a good meal. Out of those questions, let us pick up important ones which we must especially keep in our minds at all times.

2. How much should we eat?

The standard quantity of a day for a grown-up man is 2400 calories. Protein must be 50-60 grams. The number of calories must be adjusted according to the extent of work. There is no need to figure out the calories to be taken in a day. You may depend upon your appetite or hungry feeling. The shortage of calories will be known when you feel hungry, lose spirit and become thin. Do not eat too much. You may take the greater part of calories from carbohydrates, but do not fail to take a part of them from fat.

3. What sort of protein should we eat?

If it is of good quality, it will be all right even if the protein does not reach 60 grams a day. You must ry to take as much animal protein as possible. But eating too much of it is apt to produce poisonous substances and overburden kidneys which discharge them.

4. In what way should we take minerals?

You must take a sufficient quantity of calcium and phosphorus in order to make healthy your bones, teeth and blood. It is necessary to eat vegetables and fruit (to supply vitamins and to keep the blood [illegible]-acid). The Japanese take phosphorus fairly well, but take little calcium. Try to take calcium since its shortage causes the shortage of nutriments for bones and teeth.

DECLASSIFIED E.O. 12065 SECTION 3-402/NNDG NO. 775013

5. What attention should be paid to vitamins?

Although the necessary quantity of vitamins is very small, its shortage will cause illness, make the body languid, lessen the appetite and make the body weak against contagious disease. You must be careful since vitamins are apt to be lost by cooking. From the standpoint of vitamins, it is best to eat foods raw, but cooking is necessary from a sanitary point of view and to make foods digestive.

What the Japanese are apt to lack most of all is B_1 followed by B_2, A, C and D. You need not fear over-eating of vitamins, but drinking too much liver oil is harmful. This is not because vitamin A and D are too much, however.

6. Are foods digested if we only swallow them?

When you are served with "cheap, delicious and nourishing" foods, you must not think that all you have to do is to throw them down into the body and that the stomach and intestines will naturally take care of them. You must then chew well before anything else, otherwise the foods will never be "cheap, delicious and nourishing". If the foods only pass through the stomach and intestines and go out of the body, you will not be able to obtain calories, and, moreover, the labor of the intestines will result in the loss of calories. When you enter a water closet you have a good opportunity to investigate whether your chewing is sufficient. You will notice by the investigation that it is best to eat cereals other than rice, such as beans, in the shape of powder. Corn, soy bean and wheat should naturally be powdered. Carrot and burdock, too, will become much more digestive if they are smashed.

Do not consider, however, that you can eat anything if it is powdered. Even if you powder husks and straws very finely, they will not become nourishing at all, since they are indigestive cellulose. On the contrary, the work of your stomach and intestines will result in the loss of calories and the organs will be damaged.

Can you answer the following questions?

1. If powdered, any one of these: husk, straw and stone - becomes nourishing.

Answer - Right Not right

2. Chewing foods well or not makes no difference to nutrition.

Answer - Right Not right

DECLASSIFIED E.O. 12065 SECTION 3-402/NNDG NO. 775013

3. Number the following 1, 2, 3 . . ., beginning with what you think best for your meal:

(1) Unpalatable, cheap and nourishing meal. ( )

(2) Palatable, " " " " ( )

(3) Unpalatable, dear, and nourishing meal. ( )

(4) Palatable " " " " ( )

(5) Unpalatable, dear and unnourishing meal. ( )

(6) Palatable, dear and unnourishing meal. ( )

(7) Unpalatable, cheap and unnourishing meal. ( )

(8) Palatable, cheap and unnourishing meal. ( )

4. Which is right, (1) or (2)?

There are vitamins A and D in liver oil,

(1) so we had better have much of it

(2) but we must not exceed the limit

5. Which is right, (1) or (2)?

(1) Without eating food we can get along with our spiritual power.

(2) Without food, we cannot live only with spiritual power.

From now on investigate about the following problems:

1. Utilization of wild grass containing many vitamins.

Wild grass contains many vitamins, so it is said to be good to eat dried and powdered grass. Wild grass has a bad smell and is strongly alkali, so many people boil it in lye to remove alkali, but this spoils vitamin C. Care must be taken to treat it in the way of manufacturing tea. Soak grass in hot water and dry it in the shade. Do not expose it to the sun as vitamin A and B_2 which are weak against sunbeam will be broken. After it is dried, powder it and remove fiber. You can eat it without noticing the smell.

The dried leaves of radish which have long been used in Japan do not necessarily contain vitamins. With the above method you can get tasty powder containing vitamins A, B and C. The powder can be used for making bean soup.

In America spinach is sold fresh or canned - <u>not</u> powdered.

2. Why does canned spinach appear in the comics of Popeye?

When it was discovered in America that spinach contains many vitamins, a big company was established and canned spinach was made and sold. It is

DECLASSIFIED E.O. 12065 SECTION 3-402/NNDG NO. 775013

said that the company is advertising to the effect that one who take spinach will become a strong, big man. Letters on the can that appear in the carton mean spinach.

3. In these days you might be suffering from the shortage of protein. If we want to keep our health only with the protein of rice we will have to eat 1.1 kilograms (8 Go). It is said that farmers who do not eat meat and fish at all eat 8 Go or 1 Sho of rice a day. Even when they have sufficient calories they feel hungry when protein becomes short and so they eat rice so as not to lack protein. It is also said that if side dish rich in protein is given to them the quantity of rice they eat will decrease gradually. Pay attention also to such problems as this and make your observation.

4. Rice has 7% of protein, while sweet potato has only 1.3% and its quality is inferior to that of rice. If sweet potato is distributed in place of rice, the quantity of protein will be less than one-fifth. If the ration is 2.5 Go of rice, the protein will be 25 grams. As protein necessary for health is 60 grams a day, we are in a danger of having lack of nutrition unless we try to get the remaining 35 grams.

When one has a lack of nutrition caused by the shortage of protein or vitamins, he will have swelling and the skin will become pale yellow. First legs, then eyelids swell. Have you not seen such a person? In order to prevent this, you must eat fish when you eat potato. By eating a sardine together with its intestines you can take vitamin A and B as well as protein.

5. Do you not happen to see men with deficiency diseases of vitamin A and C? Those who have a dark, lustreless color are patients of this disease. When A is short, the skin becomes dry and husky. What becomes dry is not only the outside of the body. Mucous membranes in the mouth and gastro intestinal tract also drys and when we look at it with a microscope we find there are numerous wounds in the membrane. Germs invade the body through the wounds and infect persons with tuberculosis, influenza, tympanitis or scarlet fever.

6. Here is a problem to which those who live in the cities must pay attention. It is said that many cases of deficiency of vitamin C are found among the people of cities, especially among those who live in luxury. It is because they do not drink green tea but drink black tea and coffee which contains little

DECLASSIFIED E.O. 12065 SECTION 3-402/NNDG NO. 775013

vitamin C. It is also because they eat few fresh vegetables and prefer apples and pears which have very little C. Apples, pears, and peaches, which are covered with paper bags for the purpose of protecting fruit from insects, are not exposed to the sun and, accordingly, contain almost no vitamin A and C. What contains A and C most of all is mandarin oranges, persimmons, loquats, apricots and cherries have much vitamin A and C. You will see all of them are fruits which are not covered by paper bags, Investigate for yourself.

7. Are you not feeling languid? If you are, investigate if it is not due to deficiency of B_1.

When B_1 is short, we first feel our limbs are languid. The deficiency of C makes the whole body languid, while in the case of B_2 only the limbs are affected. The legs will become so languid that we shall not be able to run up stairs. If it gets worse, the heart will be weakened and we shall be short of breath. If the deficiency or protein is added to the deficiency of B_1 we shall have a terrible swelling.

8. Do you not have sores or little wounds that matter?

They say that such troubles are because of overeating potato. It is quite so. Protein is necessary for the cure of wounds. Especially protein that composes the skin requires protein of superior quality. It must contain much sulphur. Such protein cannot be found in foods other than fish and meat. Rice and potato have only a little of it, so when we eat only potato we are short in materials that repair wounds. Children's wounds are slow in recovering because they need protein for their own growth. If the deficiency of vitamin A is added to the shortage of protein, the rough weakened skin will become unable to cure the wounds and prevent the propagation of germs there.

9. What will happen if salt is short?

When we eat a lot of potato we must take salt as well as protein; otherwise we shall have a lack of nutrition. Potato contains a large quantity of sodium. When lots of potatoes are eaten, [illegible] body becomes too much and is discharged with urine. However, as the behavior of potash is like that of sodium, it carries sodium with it when it goes out of the body. Sodium is what composes salt together with chlorine, so the loss of sodium will naturally result in shortage of salt. The shortage of salt not only makes the body

DECLASSIFIED E.O. 12065 SECTION 3-402/NNDG NO. 775013

languid but makes it less resistent to illness and also weakens the heart.

10. It is said that the shortage of calcium makes us nervous. The Japanese, who are apt to lack calcium even in normal days, may have a great shortage of it at this time when vegetables are scarce. The situation will become worse if a shortage of vitamin C is added, for the shortage of C makes people gloomy and deprives them of their cheerfulness. Our community will not be peaceful if such people increase. We must intend to make a bright, happy community by eating a lot of calcium.

11. How can we beautify our bodies?

The beauty of the body cannot be obtained only by putting powder and rouge on the outside. What is most important for beautifying the body is to keep every part of the body in a healthy condition. It will be too late to try to have a strong body after you are fully grown. You boys and girls are now right in the stage of growth. Pay sufficient attention to nutrition and exercise. Do not miss the present opportunity to become the owner of a beautiful, healthy body and a bright, pure heart. That is the way to make life really happy and build a happy community.

Quantity of main ingredients in 100 calories of food

Name of food	Protein (gr.)	Lime (gr.)	Phosphorus (gr.)	Iron (mg.)	Vit. A	Vit. B_1	B_2	C*
Uncleaned rice								
Cleaned rice								
Soy bean								
Bean paste								
Sweet potato								
Potato								
Radish								
Spinach								
Peach								
Watermelon								
Mandarin orange								
Laver								
Beef								
Hen's egg								
Cow's milk								

Footnote:* Vitamin A - In international units; Vitamin B_1 in gamma units; Vitamin B_2 - In gamma units; Vitamin C -