TECHNICAL MANUAL

AVIATION UNIT MAINTENANCE (AVUM) AND AVIATION INTERMEDIATE MAINTENANCE (AVIM) MANUAL

FOR

GENERAL AIRCRAFT MAINTENANCE

(GENERAL MAINTENANCE AND PRACTICES)

VOLUME 1

***This manual together with TM 1-1500-204-23-2 through TM 1-1500-204-23-10, dated 31 July 1992, supersedes TM 55-1500-204-25/1, dated 6 April 1970, including all changes.**

DISTRIBUTION STATEMENT A: Approved for public release; distribution is unlimited.

HEADQUARTERS, DEPARTMENT OF THE ARMY
31 JULY 1992

WARNING

An operating or maintenance procedure, practice, condition, statement, etc., which if not strictly observed, could result in injury to or death of personnel.

CAUTION

An operating or maintenance procedure, practice, condition, statement, etc., which, if not strictly observed, could result in damage to, or destruction of, equipment or loss of mission effectiveness or long term health hazards to personnel.

NOTE

An essential operating or maintenance procedure, condition, or statement, which must be highlighted.

WARNING

PRECAUTIONARY DATA

Personnel performing operations, procedures, and practices which are included or implied in this work requirement shall observe the following warnings. Disregard of these warnings and precautionary information can cause serious injury, death, or destruction of material.

WARNING

ELECTRICAL TESTS

Electrical power up to 500 volts is used in testing the equipment. Exercise extreme caution during these tests. Ensure the equipment is grounded and operated in accordance with the operator's manual. Never operate electrical equipment during rain or while standing in water or wet areas. Use rubber mats to stand on.

WARNING

ELECTRICAL EQUIPMENT

All switches and electrical equipment shall be of the enclosed explosion-proof type. All metal apparatus shall be grounded to avoid the danger of igniting test fuid fumes or creating electrical shock.

WARNING

USING SOLVENTS/PAINTS

Standard precautions such as fire prevention and adequate ventilation shall be exercised when using solvents or applying primer and coating.

Wear gloves or gauntlets when handling solvents as solvents may cause skin disorders.

Cements and solvents used to repair liferafts are fammable and shall be treated as such. Never smoke or permit any type of open flame near when using cements or solvents.

Dichloromethane (methylene chloride) vapor is heavier than air, adequate ventilation shall be provided for working personnel. Dichloromethane (methylene chloride) is toxic when vapors are inhaled over an extended period of time.

WARNING

HANDLING PLASTICS

Wear gloves to protect hands while handling hot plastic. Boiling water shall not be used for heating acrylate base plastics.

Provide adequate ventilation when working with Furane Plastics, Epocast H-991-A, Furane hardener 941, or equivalents as these materials are toxic.

WARNING

LUBRICATING OIL

Lubricating oil, MIL-L-7808 or MIL-L-23699, contains an additive which is poisonous and absorbed readily through the skin. Do not allow oil to remain on skin. Wash with soap and water.

WARNING

FUEL

When servicing aircraft or support equipment, clean up spilled fuel with cotton mops or cotton rags. Wash off any fuel on hands, body, or clothing.

WARNING

HANDLING ACID

Wear protective clothing when mixing acid with water. Always pour acid into water, never water into acid.

WARNING

HANDLING PYROTECHNIC FLARES

Handle pyrotechnic flares with the same care as high explosives.

WARNING

MAGNESIUM ALLOY FIRE

Do not use water or any standard liquid or foam-type fire extinguishers on a magnesium alloy fire, as they may cause an explosion. Use dry sand or talcum powder, Federal Specification U-T-30.

WARNING

AIRCRAFT ENGINE VALVES

Severe personal injury may result when sodium-filled valves are mutilated. The metallic sodium used in these valves, when brought into contact with the skin (contacts moisture), gives off highly flammable hydrogen gas.

WARNING

REMOVING CORROSION

Take precautions, such as wetting the area or exhausting debris, to prevent possible dust explosions when removing corrosion from steel alloys. Use goggles or face shield when removing paint or corrosion with a wire brush or by the grinding method.

WARNING

TIRES AND WHEELS

If it is necessary to approach a wheel with a hot brake, do so either from directly in front or directly behind the aircraft.

Use extreme caution when prying out foreign material imbedded in tire tread.

Do not use air bottles or booster pumps not designed for tire inf ation.

Ensure the valve core is removed before removing wheel bolts or screws.

Tires shall be inf ated outside a restraining device only to a pressure suff cient to force the tire bead onto the rim ledge and create an airtight seal with the tire and bead. Use no more than 15 pounds pressure outside the restraining device. If seal is not formed, check tire rim and bead and repeat procedure. Use soap type liquid on rim for ease of movement.

WARNING

OXYGEN SYSTEM

Do not allow petroleum base products to come in contact with oxygen system components, as an explosion or fire may result.

Do not use masking tape to seal openings in oxygen regulators. Masking tape constitutes a safety hazard when use` on either serviceable or repairable oxygen equipment.

DELETED

WARNING

GROUND SUPPORT EQUIPMENT

Always operate all equipment in accordance with the operator’s manual.

Do not attempt to lift any load when the hydraulic axle jack is tilted.

To prevent accidental falls, appropriate maintenance platforms/safety stands illustrated in appropriate workstand manuals or any other approved locally procured/manufactured safety stands/restraint equipment will be used when working (above 4 feet) on aircraft in a non-tactical environment.

Install safety lock when an adjustable-height maintenance platform is in use.

Ensure the air hose used with compressed air is safe for the pressure being handled.

Release air pressure in air compressor tank before performing maintenance on air compressors.

Disconnect power before changing belts on electrically-driven compressors.

Disconnect electrical power before opening or disassembling any part of electrical equipment.

WARNING

RADIOGRAPHIC EQUIPMENT

Exercise extreme caution when performing radiographic inspections to prevent personnel from coming in contact with radiation. Radiation from X-ray units and radioisotope sources is extremely destructive to living tissue.

WARNING

FIRE EXTINGUISHERS

Halon type fire extinguishers, Monobromotrifluoromethane (CF_3BR) and Bromochloromethane (CB) are odorless gasses. When used in confined areas, available oxygen for breathing may be depleted. Use supplied breathing air when using these gasses in enclosed spaces.

WARNING

HYDRAULIC FLUID

To avoid contamination, do not use previously opened cans of hydraulic fluid. A new, sealed can of fluid must be opened and used. When opening can, clean top and use a clean, sharp, unplated instrument to prevent contamination.

Acrylic monomer and polymer base adhesive, MIL-A-8576, contains a volatile liquid which may prove toxic when vapors are inhaled over extended periods. Use only with adequate ventilation.

Observe fire precautions when using aliphatic naphtha, Federal Specification TT-N-95.

WARNING

COMPRESSED AIR

Compressed air shall not be used for cleaning purposes except if reduced to less than 30 psi and then only with effective chip-guarding and personal protective equipment.

WARNING

NOISE HAZARD

Noise levels reached during ground runup of Army aircraft are of a level that may cause permanent hearing loss. Maintenance personnel shall wear adequate hearing protection when working on aircraft with engines in operation.

WARNING

TURBINE ENGINE OIL

To avoid contamination, do not use previously opened cans of engine oil, new sealed can of fluid must be opened and used. When opening can, clean top and use a clean, sharp un-plated instrument to prevent contamination.

WARNING

MERCURY

A very small amount of mercury may produce hazardous vapors. Refer to TM 385-4, Safety Precautions for Maintenance of Electrical/Electronic Equipment, for safety precautions to use when handling mercury and for methods that are used to clean up mercury spillage.

WARNING

CARTRIDGES

Electrically activated fire extinguisher cartridges, external stores release cartridges, external load cable cutter cartridges and cargo hook thruster cartridges shall be protectively wrapped in aluminum foil or electrically shunted whenever removed from the aircraft installation to preclude "stray" electrical voltage activation and resulting personal injury.

WARNING

PROPER USE OF PLATED TOOLS

Use only chrome plated steel or unplated steel tools for disassembly or reassembly procedures described in this manual. Use of cadmium or zinc plated tools is not permitted since these platings are prone to chipping and flaking. Should these chips or flakes become embedded in aircraft parts, galvanic corrosion will result. Should these chips or flakes enter fuel or oil wetted components, they may eventually clog the filter or produce intergranular attack of nickel or titanium base alloys at elevated temperature. All tools regardless of type plating should be serviceable and free of chipping.

WARNING

SPECIAL INSTRUCTIONS

All equipment must be operated in accordance with the manufacturer's operating instructions. If unavailable, instructions for the use and care will be developed. Standard Operating Procedures (SOPs) will be prepared and used for all shop operations (refer to AR 385-95). The supporting Safety Office will use their expertise to provide assistance.

Guidance for industrial hazards can be found in the Code of Federal Regulations, Code of Federal Regulations 29 CFR 1910.

WARNING

DEGREASING SOLVENTS

Degreasing Solvent, MIL-PRF-680, is combustible and toxic to eyes, skin, and respiratory tract. Wear protective gloves and goggles/face shield. Avoid repeated or prolonged contact. Use only in well ventilated areas (or use approved respirator as determined by local safety/industrial hygiene personnel). Keep away from open flames, sparks, or other sources of ignition.

WARNING

ALIPHATIC NAPHTHA

Aliphatic Naphtha, TT-N-95, is extremely flammable and toxic to eyes, skin, and respiratory tract. Wear protective gloves and goggles/face shield. Avoid repeated or prolonged contact. Use only in well ventilated areas (or use approved respirator as determined by local safety/industrial hygiene personnel). Keep away from open flames, sparks, or other sources of ignition.

WARNING

CLEANING SOLVENT

Cleaning Solvent, HFE-71DE, is toxic to eyes, skin, and respiratory tract, and decomposes into other hazardous products when exposed to extreme heat. Wear chemical protective gloves and goggles/face shield. Avoid repeated or prolonged contact. Use only in well ventilated areas. If ventilation is not adequate, use approved respirator as determined by local safety/industrial hygiene personnel. Keep away from open flames, welding, or other sources of extreme heat.

WARNING

CLEANING COMPOUND

Cleaning Compound, MIL-PRF-87937, Type II, can irritate eyes and skin. Wear protective gloves and goggles. Avoid repeated or prolonged contact.

WARNING

CLEANING COMPOUND

Cleaning Compound, MIL-PRF-85570, Type II, can irritate eyes, skin, and respiratory tract. Wear protective gloves and goggles. Avoid repeated or prolonged contact. Use in well ventilated areas.

WARNING

ISOPROPYL ALCOHOL

Isopropyl Alcohol, TT-I735, is flammable and toxic to eyes, skin, and respiratory tract. Wear protective gloves and goggles/face shield. Avoid repeated or prolonged contact. Use only in well ventilated areas (or use approved respirator as determined by local safety/industrial hygiene personnel). Keep away from open flames, sparks, or other sources of ignition.

URGENT

CHANGE
NO. 7

HEADQUARTERS
DEPARTMENT OF THE ARMY
WASHINGTON, DC., 22 December 2010

AVIATION UNIT MAINTENANCE (AVUM) AND AVIATION INTERMEDIATE MAINTENANCE (AVIM) MANUAL FOR GENERAL AIRCRAFT MAINTENANCE (GENERAL MAINTENANCE AND PRACTICES) VOLUME 1

This document has been reviewed for the presence of Class I Ozone Depleting Chemicals by the AMCOM G-4 (Logistics) Environmental Division. As of the base through C03, dated 13 January 2003, all references to Class I Ozone Depleting Chemicals have been removed from this document by substitution with chemicals that do not cause atmospheric ozone depletion EXCEPT Bromotrifluoromethane (CF3BR); Fire Extinguisher Agent (Halon 1301).

This document has been reviewed for the presence of SOLVENTS containing hazardous materials as defined by the EPCRA 302 and 313 lists by the AMCOM G-4 (Logistics) Environmental Division. As of the base through C03, dated 13 January 2003, all references to Solvents containing hazardous materials have been removed from this document by substitution with non-hazardous or less hazardous materials where possible.

DISTRIBUTION STATEMENT A: Approved for public release; distribution is unlimited.

TM 1-1500-204-2-1, Dated 31 July 1992, is changes as follows:

1. Remove and insert pages as indicated below. New or changed text material is indicated by a vertical bar in the margin. An illustration change is indicated by a miniature pointing hand.

Remove Pages	Insert Pages
A and B	A and B
3-5 and 3-6	3-5 and 3-6
6-1 and 6-2	6-1 and 6-2
9-29 and 9-30	9-29 and 9-30
9-37 and 9-38	9-37 and 9-38
11-21 and 11-22	11-21 and 11-22
13-1 and 13-2	13-1 and 13-2

2. Retain this sheet in front of manual for references purposes.

By Order of the Secretary of the Army:

By Order of the Secretary of the Army:

GEORGE W. CASEY, JR.
General, United States Army
Chief of Staff

Official:

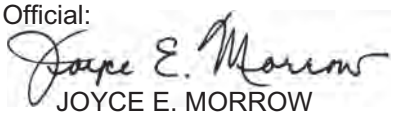

JOYCE E. MORROW
Administrative Assistant to the
Secretary of the Army
1033501

Distribution:

To be distributed in accordance with the initial distribution number (IDN) 313302 requirements for TM 1-1500-204-23-1.

DISTRIBUTION:

To be distributed in accordance with the initial distribution number (IDN) 313302 requirements for TM 1-1500-204-23-1.

URGENT

CHANGE

NO. 6

HEADQUARTERS
DEPARTMENT OF THE ARMY
WASHINGTON, DC., 18 December 2009

AVIATION UNIT MAINTENANCE (AVUM) AND AVIATION INTERMEDIATE MAINTENANCE (AVIM) MANUAL FOR GENERAL AIRCRAFT MAINTENANCE (GENERAL MAINTENANCE AND PRACTICES) VOLUME 1

This document has been reviewed for the presence of Class I Ozone Depleting Chemicals by the AMCOM G-4 (Logistics) Environmental Division. As of the base through C03, dated 13 January 2003, all references to Class I Ozone Depleting Chemicals have been removed from this document by substitution with chemicals that do not cause atmospheric ozone depletion EXCEPT Bromotrifluoromethane (CF3BR); Fire Extinguisher Agent (Halon 1301).

This document has been reviewed for the presence of SOLVENTS containing hazardous materials as defined by the EPCRA 302 and 313 lists by the AMCOM G-4 (Logistics) Environmental Division. As of the base through C03, dated 13 January 2003, all references to Solvents containing hazardous materials have been removed from this document by substitution with non-hazardous or less hazardous materials where possible.

DISTRIBUTION STATEMENT A: Approved for public release; distribution is unlimited.

TM 1-1500-204-2-1, Dated 31 July 1992, is changes as follows:

1. Remove and insert pages as indicated below. New or changed text material is indicated by a vertical bar in the margin. An illustration change is indicated by a miniature pointing hand.

Remove Pages	Insert Pages
A and B	A and B
2-9 and 2-10	2-9 and 2-10
3-5 through 3-8	3-5 through 3-8
9-29 and 9-30	9-29 and 9-30
11-13 and 11-14	11-13 and 11-14
13-1 and 13-2	13-1 and 13-2

2. Retain this sheet in front of manual for references purposes.

By Order of the Secretary of the Army:

GEORGE W. CASEY, JR.
General, United States Army
Chief of Staff

Official:

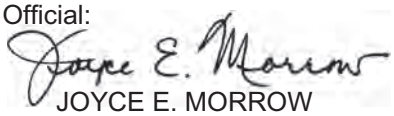

JOYCE E. MORROW
Administrative Assistant to the
Secretary of the Army
1004803

Distribution:

To be distributed in accordance with the initial distribution number (IDN) 313302 requirements for TM 1-1500-204-23-1.

CHANGE
NO. 5

HEADQUARTERS
DEPARTMENT OF THE ARMY
WASHINGTON, DC., 31 May 2006

TECHNICAL MANUAL

AVIATION UNIT MAINTENANCE (AVUM) AND AVIATION INTERMEDIATE MAINTENANCE (AVIM) MANUAL FOR GENERAL AIRCRAFT MAINTENANCE

(GENERAL MAINTENANCE AND PRATICES)
VOLUME 1

OZONE DEPLETING

This document has been reviewed for the presence of Class I Ozone Depleting Chemicals by the AMCOM G-4 (Logistics) Environmental Division. As of the base through C03, dated 13 January 2003, all references to Class I Ozone Depleting Chemicals have been removed from this document by substitution with chemicals that do not cause atmospheric ozone depletion EXCEPT Bromotriffluoromethane (CF3BR); Fire Extinguisher Agent (Halon 1301).

HAZARDUS MATERIAL INFORMATION

This document has been reviewed for the presence of SOLVENTS containing hazardous materials as defined by the EPCRA 302 and 313 lists by the AMCOM G-4 (Logistics) Environmental Division. As of the base through C03, dated 13 January 2003, all references to Solvents containing hazardous materials have been removed from this document by substitution with non-hazardous or less hazardous materials where possible.

DISTRIBUTION STATEMENT A: Approved for public release; distribution is unlimited.

TM 1-1500-204-23-1, DATED 31 July 1992, is changed as follows:

1. Remove and insert pages as indicated below. New or changed text material is indicated by a vertical bar in the margin. An illustration change is indicated by a miniature pointing hand.

Remove Pages	Insert Pages
a through d	a through f
A and B	A and B
i through iv	i through iv
2-3 through 2-6	2-3 through 2-6
6-1 through 6-6	6-1 through 6-6
7-19 through 7-24	7-19 through 7-24
7-29 and 7-30	7-29 and 7-30
7-37 and 7-38	7-37 and 7-38
8-17 through 8-20	8-17 through 8-20
9-7 through 9-10	9-7 through 9-10
9-29 through 9-32	9-29 through 9-32
9-43 and 9-44	9-43 and 9-44

9-49 through 9-58	9-49 through 9-58
13-1 and 13-2	13-1 and 13-2
Index 79 and Index 80	Index 79 and Index 80
Index 89 and Index 90	Index 89 and Index 90

2. Retain this sheet in front of manual for reference purposes.

By Order of the Secretary of the Army:

PETER J. SCHOOMAKER
General, United States Army
Chief of Staff

Official:

JOYCE E. MORROW
Administrative Assistant to the
Secretary of the Army
0612301

DISTRIBUTION: To be distributed in accordance with Initial Distribution Number (IDN) 313302, requirements for TM 1-1500-204-23-1.

CHANGE

NO. 4

HEADQUARTERS
DEPARTMENT OF THE ARMY
WASHINGTON, DC., 10 June 2005

TECHNICAL MANUAL

AVIATION UNIT MAINTENANCE (AVUM) AND AVIATION INTERMEDIATE MAINTENANCE (AVIM) MANUAL FOR GENERAL AIRCRAFT MAINTENANCE

(GENERAL MAINTENANCE AND PRATICES)
VOLUME 1

DISTRIBUTION STATEMENT A: Approved for public release; distribution is unlimited.

TM 1-1500-204-23-1, dated 31 July 1992, is changed as follows:

1. Remove and insert pages as indicated below. New or changed text material is indicated by a vertical bar in the margin. An illustration change is indicated by a miniature pointing hand.

Remove Pages	Insert Pages
A /(B blank)	A and B
3-5 and 3-6	3-5 and 3-6
3-9 and 3-10	3-9 and 3-10
3-15 and 3-16	3-15 and 3-16
4-1 and 4-2	4-1 and 4-2
11-15 and 11-16	11-15 and 11-16
Index 63 and Index 64	Index 63 and Index 64

2. Retain this sheet in front of manual for reference purposes.

By Order of the Secretary of the Army:

Official:

PETER J. SCHOOMAKER
General, United States Army
Chief of Staff

Sandra R. Riley

SANDRA R. RILEY
Administrative Assistant to the Secretary of the Army
0512203

DISTRIBUTION: To be distributed in accordance with Initial Distribution Number (IDN) 313302, requirements for TM 1-1500-204-23-1.

CHANGE
NO. 3

HEADQUARTERS
DEPARTMENT OF THE ARMY
WASHINGTON, D.C., 13 January 2003

TECHNICAL MANUAL

**AVIATION UNIT MAINTENANCE (AVUM)
AND AVIATION INTERMEDIATE
MAINTENANCE (AVIM) MANUAL**

FOR

GENERAL AIRCRAFT MAINTENANCE

(GENERAL MAINTENANCE AND PRACTICES)

VOLUME 1

DISTRIBUTION STATEMENT A: Approved for public release; distribution is unlimited.

TM 1-1500-204-23-1, 31 July 1992, is changed as follows:

1. Remove and insert pages as indicated below. New or changed text material is indicated by a vertical bar in the margin. An illustration change is indicated by a miniature pointing hand.

Remove pages	Insert pages
A/(B blank)	A and B
i and ii	i and ii
2-9 and 2-10	2-9 and 2-10
8-1 and 8-2	8-1 and 8-2
11-1 and 11-2	11-1 and 11-2
11-17 and 11-18	11-17 and 11-18
13-3/(13-4 blank)	13-3/(13-4 blank)

2. Retain this sheet in front of manual for reference purposes.

By Order of the Secretary of the Army:

Official:

ERIC K. SHINSEKI
General, United States Army
Chief of Staff

JOEL B. HUDSON
Administrative Assistant to the
Secretary of the Army
0233706

DISTRIBUTION:
To be distributed in accordance with initial distribution number (IDN) 313302, requirements for TM 1-1500-204-23-1.

CHANGE

NO. 2

HEADQUARTERS
DEPARTMENT OF THE ARMY
WASHINGTON, D.C. 1 MARCH, 2000

Technical Manual

AVIATION UNIT MAINTENANCE (AVUM) AND AVIATION INTERMEDIATE MAINTENANCE (AVIM) MANUAL FOR GENERAL AIRCRAFT MAINTENANCE (SHEET METAL SHOP PRACTICES) VOLUME 1

DISTRIBUTION STATEMENT A: Approved for public release; distribution is unlimited.

TM 1-1500-204-23-1, dated 31 July 1992, is changed as follows:

1. Remove and insert pages as indicated below. New or changed A vertical bar in the margin indicates text material. A miniature pointing hand indicates an illustration change.

Remove pages	Insert pages
i and ii	A and B
v and vi	i and ii
3-9 and 3-10	v and vi
3-19/(3-20/blank)	3-9 and 3-10
6-1 and 6-2	3-19/(3-20/blank)
9-43 and 9-44	6-1 and 6-2
11-1 and 11-2	9-43 and 9-44
11-5 through 11-10	11-1 and 11-2
11-13 through 11-18	11-5 through 11-10
11-33 through 11-38	11-13 through 11-18
13-1 and 13-2	11-33 through 11-38
A-1 and A-2	13-1 and 13-2
Index 9 and Index 10	A-1 and A-2
	Index 9 and Index 10

2. Retain this sheet in front of manual for reference purposes.

By Order of the Secretary of the Army:

ERIC K. SHINSEKI
General, United States Army
Chief of Staff

Official:

JOEL B. HUDSON
Administrative Assistant to the
Secretary of the Army
0001902

DISTRIBUTION: To be distributed in accordance with Initial Distribution Number (IDN) 313302, requirements for TM 1-1600-204-23-1.

CHANGE

NO. 1

HEADQUARTERS
DEPARTMENT OF THE ARMY
WASHINGTON, D.C., 29 OCTOBER 1993

AVIATION UNIT MAINTENANCE (AVUM)
AND AVIATION INTERMEDIATE MAINTENANCE (AVIM) MANUAL

FOR

GENERAL AIRCRAFT MAINTENANCE
(General Maintenance and Practices)

DISTRIBUTION STATEMENT A: Approved for public release; distribution is unlimited.

TM 1-1500-204-23-1, 31 July 1992, is changed as follows:

1. Remove and insert pages as indicated below. New or changed text material is indicated by a vertical bar in the margin. An illustration change is indicated by a miniature pointing hand.

Remove pages	Insert pages
c and d	c and d
i and ii	i and ii
3-5 and 3-6	3-5 and 3-6
3-9 through 3-12	3-9 through 3-12
11-13 through 11-16	11-13 through 11-16
11-25 through 11-28	11-25 through 11-28
12-1 and 12-2	12-1 and 12-2
A-1 and A-2	A-1 and A-2

2. Retain this sheet in front of manual for reference purposes.

By Order of the Secretary of the Army:

GORDON R. SULLIVAN
General, United States Army
Chief of Staff

Official:

MILTON H. HAMILTON
Administrative Assistant to the
Secretary of the Army
05627

Distribution:

To be distributed in accordance with DA Form 12-31-E, block no. 3302, requirements for TM 1-1500-204-23-1.

☆ U.S. GOVERNMENT PRINTING OFFICE: 1994 - 510-106-00002

LIST OF EFFECTIVE PAGES

Insert latest changed pages. Dispose of superseded pages in accordance with regulations.

NOTE: On a changed page, the portion of the text affected by the latest change is indicated by a vertical line, or other change symbol, in the outer margin of the page. Changes to illustrations are indicated by miniature pointing hands. Changes to wiring diagrams are indicated by shaded areas.

Dates of issue for original and changed pages are:

Original ……. ..... 31 July 1992
Change 1.....October 1993
Change 2.....1 March 2000
Change 3.....13 January 2003
Change 4 .....10 June 2005
Change 5……...31 May 2006
Change 6……. .....18 December 2009
Change 7 .....22 December 2010

TOTAL NUMBER OF PAGES IN THIS PUBLICATION IS 450, CONSISTING OF THE FOLLOWING:

Page No.	*Change No.	Page No.	*Change No.
Cover	0	6-4 – 6-5	0
a - f	5	6-6	5
A and B	7	7-1 – 7-18	0
i - iv	5	7-19 – 9-21	5
v	2	7-22	0
vi	0	7-23	5
1-1	0	7-24 – 7-29	0
1-2 blank	0	7-30	5
2-1 – 2-3	1	7-31 – 7-36	0
2-4	5	7-37	5
2-5	5	7-38 – 7-47	0
2-6 – 2-9	0	7-48 blank	0
2-10	6	8-1	3
2-11	0	8-2 – 8-16	0
2-12 blank	0	8-17	5
3-1 – 3-4	0	8-18	0
3-5	6	8-19	5
3-6	7	8-20 – 8-21	0
3-7	6	8-22 blank	0
3-8	0	9-1 – 9-7	0
3-9 – 3-10	4	9-8	5
3-11	0	9-9	0
3-12	1	9-10	5
3-13 – 3-15	0	9-11 – 9-28	0
3-16	4	9-29	5
3-17 – 3-18	0	9-30	7
3-19	2	9-31 – 9-32	5
3-20 blank	0	9-33 – 9-36	0
4-1 and 4-2	4	9-37	7
5-1	0	9-38 – 9-42	5
5-2 blank	0	9-43	5
6-1 – 6-2	7	9-44	2
6-3	5	9-45 – 9-49	0

*Zero in this column indicated an original page.

LIST OF EFFECTIVE PAGES (CON'T)

Page No.	*Change No.
9-50 – 9-53	5
9-54	0
9-55 – 9-57	5
9-58 – 9-65	0
9-66 blank	0
10-1 – 10-12	0
11-1	2
11-2	3
11-3 – 11-4	0
11-5 – 11-7	2
11-8	0
11-9 – 11-10	2
11-11 – 11-13	0
11-14	2
11-15	4
11-16	1
11-17	2
11-18	3
11-19 – 11-21	0
11-22	7
11-23 – 11-24	0
11-25	1
11-26	0
11-27	1
11-28 – 11-32	0
11-33	2
11-34	0
11-35 – 11-36	2
11-37	0
11-38	2
11-39 – 11-40	0
12-1 – 12-2	1
13-1	5
13-2	7
13-3	3
13-4 blank	0
A-1 and A-2	2
Glossary 1	0
Glossary 2 blank	0
Index 1 – Index 8	0
Index 9	2
Index 10 – Index 49	0
Index 50 blank	0
Index 51 – Index 57	0
Index 58 blank	0
Index 59 – Index 62	0
Index 63 and Index 64	4
Index 65 – Index 67	0
Index 68 blank	0
Index 69 – Index 78	0
Index 79	5
Index 80 – Index 88	0
Index 89	5
Index 90 – Index 129	0
Index 130 blank	0
Index 131 – Index 170	0

*Zero in this column indicated an original page.

TECHNICAL MANUAL

TM 1-1500-204-23-1

HEADQUARTERS
DEPARTMENT OF THE ARMY
WASHINGTON, D.C., 31 July 1992

TECHNICAL MANUAL

AVIATION UNIT MAINTENANCE (AVUM) AND AVIATION INTERMEDIATE MAINTENANCE (AVIM) MANUAL

For

GENERAL AIRCRAFT MAINTENACE

(GENERAL MAINTENANCE AND PRACTICES)

VOLUME 1

REPORTING ERRORS AND RECOMMENDING IMPROVEMENTS

You can improve this manual. If you find mistakes, or if you know of a way to improve these procedures, please let us know. Mail your letter or DA Form 2028 (Recommended Changes to Publications and Blank Forms) located in the back of this manual, directly to: Commander, U.S. Army Aviation and Missile Command, ATTN: AMSAM-MMC-MA-NP, Redstone Arsenal, AL 35898-5000. A reply will be furnished to you. You may also provide DA Form 2028 information to AMCOM via e-mail, fax, or the World Wide Web. Our fax number is DSN 788-6546 or Commercial (256) 842-6546. Our e-mail address is: 2028@redstone.army.mil. Instructions for sending an electronic 2028 may be found at the back of this manual immediately preceding the hard copy 2028. For the World Wide Web use: https://amcom2028.redstone.army.mil.

OZONE DEPLETING

This document has been reviewed for the presence of Class I Ozone Depleting Chemicals by the AMCOM G-4 (Logistics) Environmental Division. As of the base through C03, dated 13 January 2003, all references to Class I Ozone Depleting Chemicals have been removed from this document by substitution with chemicals that do not cause atmospheric ozone depletion EXCEPT Bromotriffluoromethane (CF3BR); Fire Extinguisher Agent (Halon 1301).

HAZARDUS MATERIAL INFORMATION

This document has been reviewed for the presence of SOLVENTS containing hazardous materials as defined by the EPCRA 302 and 313 lists by the AMCOM G-4 (Logistics) Environmental Division. As of the base through C03, dated 13 January 2003, all references to Solvents containing hazardous materials have been removed from this document by substitution with non-hazardous or less hazardous materials where possible.

Distribution Statement A: Approved for public release; distribution is unlimited.

TABLE OF CONTENTS

		Page
CHAPTER 1	INTRODUCTION	1-1
CHAPTER 2	HANGAR AND SHOP OPEERATIONS	2-1
CHAPTER 3	FLIGHTLINE OPERATIONS	3-1
CHAPTER 4	AIRCRAFT STORAGE AND SHIPMENT	4-1

		Page
CHAPTER 5	MARKING OF AERONAUTICAL ITEMS	5-1
CHAPTER 6	APPLICATION AND REMOVAL OF DECALS	6-1
CHAPTER 7	GENERAL RECIPROCATING ENGINE MAINTENANCE	7-1
CHAPTER 8	GENERAL TURBINE ENGINE MAINTENANCE	8-1
CHAPTER 9	GENERAL AIRFRAME MAINTENANCE	9-1
CHAPTER 10	ARCTIC, DESERT, AND TROPIC MAINTENANCE	10-1
CHAPTER 11	AVIATION LIFE SUPPORT EQUIPMENT MAINTENANCE	11-1
CHAPTER 12	PYROTECHNICS	12-1
CHAPTER 13	AIRCRAFT CLEANING	13-1
APPENDIX A	REFERENCES	A-1
GLOSSARY		Glossary-1
INDEX		Index-1

Volume 2

CHAPTER 1	INTRODUCTION	1-1
CHAPTER 2	PNEUDRAULICS GENERAL	2-1
CHAPTER 3	HYDRAULIC SHOP OPERATIONS	3-1
CHAPTER 4	HYDRAULIC MAINTENANCE PRACTICES	4-1
APPENDIX A	REFERENCES	A-1
GLOSSARY		Glossary-1
INDEX		Index-1

Volume 3

CHAPTER 1	INTRODUCTION	1-1
CHAPTER 2	FUEL SYSTEMS	2-1
CHAPTER 3	OIL SYSTEMS	3-1
CHAPTER 4	HYDRAULIC MAINTENANCE PRACTICES	4-1
APPENDIX A	REFERENCES	A-1
GLOSSARY		Glossary-1
INDEX		Index-1

Page

Volume 4

CHAPTER 1 INTRODUCTION 1-1

CHAPTER 2 ELECTRIC SHOP OPERATIONS 2-1

CHAPTER 3 ELECTRICAL MAINTENANCE PRACTICES 3-1

CHAPTER 4 INSTRUMENT SHOP PRACTICES 4-1

APPENDIX A REFERENCES A-1

GLOSSARY Glossary-1

INDEX Index-1

Volume 5

CHAPTER 1 INTRODUCTION 1-1

CHAPTER 2 PROPELLER MAINTENACE PRACTICES AND PROCEDURES 2-1

CHAPTER 3 ROTOR MAINTENANCE PRACTICES AND PROCEDURES 3-1

CHAPTER 4 POWERTRAIN MAINTENANCE PRACTICES AND PROCEDURES 4-1

APPENDIX A REFERENCES A-1

GLOSSARY Glossary-1

INDEX Index-1

Volume 6

CHAPTER 1 INTRODUCTION 1-1

CHAPTER 2 HARDWARE 2-1

CHAPTER 3 RUBBER MATERIALS 3-1

CHAPTER 4 METALS 4-1

CHAPTER 5 PHENOLIC AND PLASTIC MATERIALS 5-1

CHAPTER 6 ADHESIVES, SEALANTS, AND CEMENTS 6-1

CHAPTER 7 CONSUMABLE MATERIALS 7-1

APPENDIX A REFERENCES A-1

GLOSSARY Glossary-1

INDEX Index-1

Page

Volume 7

CHAPTER 1	INTRODUCTION	1-1
CHAPTER 2	GENERAL	2-1
CHAPTER 3	PENETRANT INSPECTIONS	3-1
CHAPTER 4	MAGNETIC PARTICLE INSPECTIONS	4-1
CHAPTER 5	RAIOGRAPHY	5-1
CHAPTER 6	ULTRASONIC INSPECTIIONS	6-1
CHAPTER 7	ELECTROMAGNETIC INSPECTIONS	7-1
APPENDIX A	REFERENCES	A-1
GLOSSARY		Glossary-1
INDEX		Index-1

Volume 8

CHAPTER 1	INTRODUCTION	1-1
CHAPTER 2	MACHINE SHOP PRACTICES	2-1
CHAPTER 3	WELDING SHOP PRACTICES	3-1
APPENDIX A	REFERENCES	A-1
GLOSSARY		Glossary-1
INDEX		Index-1

Volume 9

CHAPTER 1	INTRODUCTION	1-1
CHAPTER 2	TOOL PROCEDURES	2-1

		Page
CHAPTER 3	MEASURING TOOLS	3-1
CHAPTER 4	GENERAL MAINTENANCE TOOLS	4-1
CHAPTER 5	PNEUMATIC TOOLS	5-1
CHAPTER 6	ELECTRIC POWER TOOLS	6-1
CHAPTER 7	SPECIAL AIRCRAFT TOOLS	7-1
CHAPTER 8	TORQUE TOOLS AND TORQUING PRINCIPLES AND PROCEDURES	8-1
CHAPTER 9	GROUND SUPPORT EQUIPMENT	9-1
APPENDIX A	REFERENCES..	A-1
GLOSSARY		Glossary 1
INDEX		Index 1

Volume 10

CHAPTER 1	INTRODUCTION	1-1
CHAPTER 2	SHEET METAL SHOP OPERATIONS	2-1
CHAPTER 3	SHOP EQUIPMENT	3-1
CHAPTER 4	AIRCRAFT STRUCTURES	4-1
CHAPTER 5	STRUCTURAL METALS	5-1
CHAPTER 6	FORMING	6-1

		Page
CHAPTER 7	RIVETS AND RIVETING TECHNIQUES	7-1
CHAPTER 8	AIRFRAME SHEET METAL REPAIR	8-1
CHAPTER 9	SANDWICH CONSTRUCTION REPAIR	9-1
CHAPTER 10	AIRCRAFTPLASTICS	10-1
CHAPTER 11	REBALANCING MOVABLE SURFACES	11-1
CHAPTER 12	SPOT WELDS	12-1
APPENDIX A	REFERENCES	A-1
APPENDIX B	BLAND RIVET CONVERSION	B-1
GLOSSARY		Glossary 1
INDEX		Index 1

CHAPTER 1

INTRODUCTION

1-1. Purpose. This volume provides general information pertaining to general maintenance and practices. Specific aircraft application, usage, and substitution is found in the individual aircraft maintenance manual. This volume is of maximum benefit to the mechanic who desires general information about general maintenance and practices. This volume furnishes the mechanic a source of information about how to perform various maintenance practices used on all aircraft. This volume is not a requisitioning authority, and applicable repair parts and special tools list should be consulted to obtain the unit of issue and National Stock Number of the items required for maintenance. However, this manual may be used as authority to obtain necessary assistance and safety related material.

1-2. Scope. General information to guide aircraft maintenance personnel is covered in this volume, however, no attempt has been made to include special parts or equipment which are applicable only to individual or special aircraft. Chapters 1, 2, and 3 cover the introduction, hangar and shop operations and flightline operations. Chapters 4, 5, and 6 explain aircraft storage and shipment, marking of aeronautical items, and application and removal of decals. General maintenance practices for reciprocating engines, turbine engines, and airframes are described in Chapters 7, 8, and 9. Arctic, desert, and tropic maintenance procedures are covered in Chapter 10. Life support maintenance procedures are covered in Chapter 11. Finally, Chapters 12 and 13 explain pyrotechnics and aircraft cleaning.

1-3. Consumable Materials . Refer to TM 1-1500-204-23-6 for consumable materials in this volume.

CHAPTER 2

HANGAR AND SHOP OPERATIONS

2-1. General. The maintenance instructions and procedures contained in this chapter are general and applicable to hangar and shop operations. Maintenance instructions that are specific to a particular aircraft are contained in the applicable maintenance manuals and will be used in conjunction with general information contained in this chapter.

2-2. Permanent Shop Installations. The following paragraphs describe permanent shop installations, operations, and equipment.

a. Typical Layout. Permanent shop layout vanes depending on shop purpose and the facility being used. Care should be taken to provide proper spacing between equipment so as not to prevent emergency access.

b. Shop Size. The size of each permanent shop shall be adequate to allow shop personnel to accomplish all normal shop operations.

c. Shop Equipment Required . Permanent shops shall be equipped with all required equipment as specified by Army command.

d. Shop Equipment Arrangement. Shop equipment is arranged to best meet the needs of the particular shop operation. All equipment must be arranged with utmost care to prevent danger to personnel.

e. Overhead Chain Hoist. Overhead chain hoists shall be inspected daily for the following.

- Excessive wear or stretch
- Bent or twisted links
- Defective welds
- Nicks and gouges

f. Compressed Air and Water Outlets Permanent shops are equipped with compressed air and water outlets. Care should be taken to allow clear access to each outlet.

g. Electrical Utilities. Electrical power is distributed throughout the permanent shop. Care should be taken to allow clear access to each outlet.

h. Noise Levels. Noise levels from machinery in permanent shops are high. Personnel working in these shops shall wear adequate hearing protection.

i. Dust and Dirt Control. Use the following procedures for dust and dirt control in permanent shops.

(1) Sweep the floors daily with an ordinary push broom.

NOTE

Carefully clean areas where dust producing operations have taken place.

(2) Clean shop equipment in accordance with the applicable maintenance manuals.

(3) Clean walls and tables periodically with a cloth dampened with a mild detergent.

j. Spray Painting . All painting shall be accomplished in the paint shop in accordance with proper procedures as set forth by the facility supervisor.

k. Adhesive Operations . Adhesives join objects over a broad area, instead of localizing stresses at one or more points, as with spot welding or metal fastening. Adhesives simplify construction by eliminating bracing, stiffeners, local reinforcements, or framing Adhesive use is a reliable, efficient assembly method.

l. Balancing Equipment. The equipment used for balancing measurements consists of a set of knife edges, weights, weighing scale, and a steel tape measure.

m. Environmental Control. The permanent shop environment is controlled by environmental control units installed throughout the shop.

n. Lighting Requirements. Adequate lighting shall be provided for all shop operations. Light fixtures

should be inspected regularly for damage and worn components.

o. *Storage of Shop Stocks. Repair Parts. and Consumable Materials*. Storage of all shop items shall be in accordance with the applicable maintenance manuals. Utmost care shall be taken to ensure the safe storage of all items.

p. *Storage of Compressed Gases* . The following precautions will be taken when storing compressed gas cylinders.

- Cylinders must be protected against excessive rise or fall of temperature.

NOTE

Cylinders will be stored inside wherever possible, and, if not, they may be stored in the open but must be protected from extreme weather conditions and also from the ground to prevent rusting. Cylinders stored in the open must be protected from accumulation of ice and snow in the summer, cylinders stored in this manner will be protected or screened against direct rays of the sun Ventilation will be provided to keep temperatures below 125°F (52.6 °C) and carry off leakage of inflammable gases.

- Cylinders must never be stored near highly flammable substances such as oil, gasoline, waste, etc. A minimum distance of 50 feet will be maintained between cylinders and flammable items.
- Care will be taken to protect cylinders from any object which might cut or damage their surfaces. Cylinders will not be stored at a place where heavy moving objects may strike or fall on them.
- Cylinders will not be stored in an area which is continually damp. Neither should they be stored near live electric wires or rails of electrical equipment.
- Valve protection caps will always be installed if they become frozen, they should be thawed out in a warm room. Do not use a steam hose to thaw them out as fusible safety plugs may melt and allow discharge of the cylinder.
- Keep empty cylinders separated from full cylinders.
- Do not store cylinders near salt or corrosive chemicals or fumes of any kind as the cylinders will become rusty and the valve caps will stick.
- Keep valves closed on all cylinders after usage.
- Do not store cylinders near radiators or other sources of heat.
- Cylinders of one kind of gas should not be stored near cylinders of other kinds of gas. A fire-resistant partition should separate flammable and nonflammable gases unless the cylinders are otherwise widely separated. Oxygen, in particular, will be separated from flammable gases or supplies.
- Storage rooms must be well ventilated to prevent possible accumulation of explosive or harmful concentration of gas.

q. *Storage of High-Value Items* . High value items shall be stored in areas that can be secured to prevent theft. Care shall be taken to store high-value items in such a manner as to prevent inadvertent damage.

r. *Open Storage for Repaired Equipment and Consumable Material*. Avoid storing repaired equipment and consumable materials in open storage areas where they can be easily damaged.

2-3. Temporary Shop Installations. The following paragraphs describe temporary shop installations, operations and equipment.

a. *Typical Shop Layout* . A typical shop layout is shown in figure 2-1 Layout of equipment vanes depending on the temporary shop purpose.

b. *Shop Size* The exterior dimensions for a deployed temporary shop are as follows:

- Width ..... 22 ft 3 in (6.78 meters)
- Height ..... 7 ft 11 in. (2.41 meters)
- Length..... 13 ft 4 in (4.06 meters)

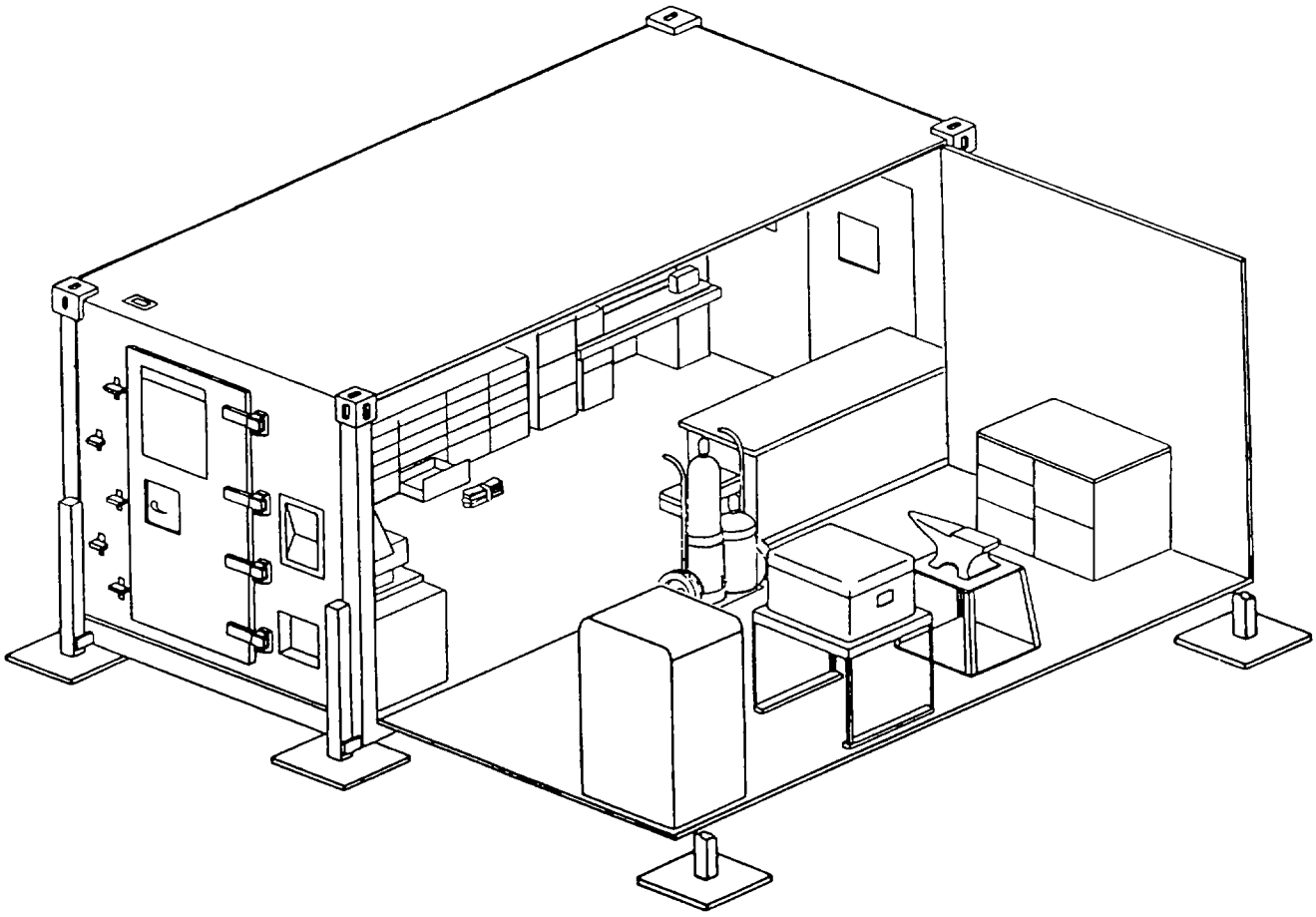

Figure 2-1. Temporary Shop Layout

c. *Equipment Mounted in Mobile Shelters.* Equipment shall be mounted in accordance with the specific shop requirements.

d. *Shop Equipment Arrangement*. Shop equipment is arranged to best meet the needs of the particular shop operation. All equipment must be arranged with utmost care to prevent danger to personnel.

e. *Chain Hoists*. Chain hoists for temporary shops shall be inspected daily for the following.

- Excessive wear or stretch
- Bent or twisted links
- Defective welds
- Nicks and gouges

f. *Compressed Air Panels*. The compressed air panel connector installed through the wall of the S-280 shops may be replaced by removing the two bolts securing it to the mounting plate. Apply sealant to the replacement connector and reinstall mounting bolts.

g. *Electrical Utilities.* Electrical power is transmitted from 60 Hz mobile electric generators through the power distribution panels to the shops by heavy-duty power cables.

h. *Noise Levels.* Noise levels in temporary shops are high. Personnel working in these shops shall wear adequate hearing protection.

i. *Dust and Dirt Control*. Use the following procedures for dust and dirt control.

(1) Sweep the floor each morning with an ordinary push broom.

(2) Once a week, clean the interior walls with a cloth dampened with a mild detergent solution and wipe dry.

(3) Once a week, clean the exterior of the shelter, using the same detergent as in step (2). Apply with a soft bristle brush or sponge, scrubbing off all dirt and grime. Rinse with clean water. Dry with a soft cloth.

j. Spray Painting. Spray painting can be used to repaint any spots in need of ref nishing. The following procedures explain spray painting of temporary shops:

(1) Remove all loose or f aked paint.

(2) Smooth with No. O sandpaper, feather edging all sanded spots to ensure a smooth surface for the new paint.

(3) Apply paint with a 2-inch spray pattern.

NOTE

Thin paint if necessary with an acceptable thinner conforming to TT-T-291.

(4) Allow 4 to 8 hours to dry.

k. Adhesive Operations. Adhesives join objects over a broad area, instead of localizing stresses at one or more points, as with spot welding or metal fastening. Adhesives simplify construction by eliminating bracing, stiffeners, local reinforcements, or framing. Adhesive use is a reliable, eff cient assembly method.

l. Balancing Equipment. The equipment used for balancing measurements consists of a set of knife edges, weights, a small accurate weighing scale, and a steel tape measure.

m. Temperature and Humidity Control. Temperature and humidity is controlled in temporary shop structures by environmental control units attached to the structure.

n. Flammable Materials. All f ammables shall be stored in accordance with existing command policies.

o. Lighting. Light f xtures should be inspected for broken lamp contacts or other damage. The lamp and protector may be replaced by removing the screws holding the retaining straps to the light f xture.

p. Repair Parts Van. The repair parts van shall be fully stocked with repair parts for the specif c shop. The van shall be located as to provide easy access by maintenance personnel.

q. Protected Storage Areas. Each command shall provide protected storage areas for f ammable or hazardous materials. Care should be taken to provide security and proper handling of items in these areas.

r. Open Storage Areas. Open storage areas will be arranged be each shop facility as needed. Supplies shall be organized to provide easy access, removal, and use.

2-4. MAINTENANCE OF SHOP EQUIPMENT. The maintenance of machinery and shop equipment shall be divided into operator maintenance, major repair, and painting.

a. Operator Maintenance. Operator maintenance consists of cleaning, lubrication, and minor adjustment of belts, guards, gibs, etc. It also includes periodic visual inspection to preclude possible damage, failure, or breakdown due to loose or excessively worn parts, defective wiring connections, insulation, safety appliances, etc.

b. Major Repair. Major repair consists of all repair work not performed by operators. Major repair within the scope of facilities shall be accomplished locally. Repairs not within the scope of local facilities shall be accomplished through a work order to direct support or a commercial contractor.

c. Painting. Painting consists of any ref nishing of equipment, from touchup to complete repainting of the item.

NOTE

All color shades shall be in accordance with Federal Specif cation FED-STD-595.

(1) Equipment repainting. When complete repainting is necessary, the original painted surface shall be ref nished with synthetic gloss enamel, Federal Specif cation TT-E-489. The color shall be green, color shade 14260.

(2) Work areas and critical parts. Work areas and critical parts will be highlighted by painting with Federal Specif cation TT-E-489. The color shade shall be 13655 yellow enamel. To ensure maximum color pattern uniformity on like items of equipment, painting and highlighting shall be accomplished in accordance with the general pattern shown in f gure 2-2. Equipment other than the type illustrated, shall be painted in accordance with these general instructions. The painted f nish on this equipment may be touched up. The commanding off cer or his designated representative shall determine the extent of the touchup allowed without complete repainting.

(3) Natural wood pieces. Wood pieces or equipment f nished in colors other than those listed in paragraph c may be touched up with colors to match existing f nish, provided touchup does not involve ref nishing a total area equal to more than 10 percent of painted surface area. When more than 10 percent of painted surface area must be touched up, item shall be repainted with colors as specified.

NOTE

Instrument repair benches or other special purpose benches, parts, and equipment having natural wood finish may be refinished in natural wood or white enamel, Federal Specification TT-E-489, color shade 17875. Working surfaces of bench tops covered with metal or composition need not be repaired.

(4) Start buttons. Start buttons shall be painted with Federal Specification TT-E-489, green synthetic gloss enamel, color shade 14260.

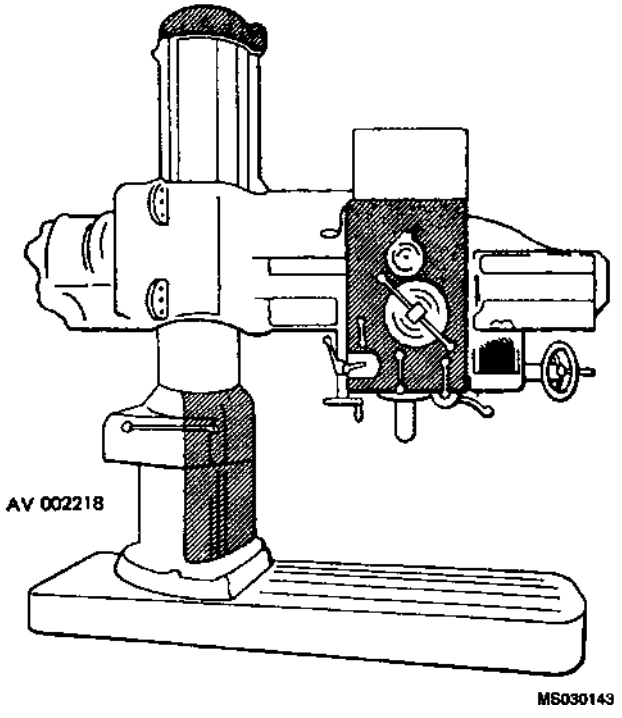

Figure 2-2. Painting of Shop Equipment to Highlight Operator Position

(5) Stop buttons. Stop buttons for electrical switches used for emergency stopping of machinery shall be painted with red synthetic gloss enamel, Federal Specification TT-E-489, color shade 11105.

(6) Hazardous areas. On some equipment, extremely hazardous conditions may exist, such as open flywheels, gears, or other moving parts which cannot be guarded or which might be impractical to guard. These parts may be painted with Federal Specification TT-E-489, orange synthetic gloss enamel, color shade 12197. Overuse of orange color will defeat the intended purpose, therefore, the local safety engineer shall determine the use of this color and furnish instructions. Painting of machined parts, such as face plates, chucks, spindels, etc, is not authorized.

(7) Preparation for painting. Prepare surfaces to be repainted using the following procedures:

(a) Surface should be clean, dry, and free from dust, grease, oil, rust, and dirt. Glossy surfaces should be sanded to dull the gloss to ensure adhesion. Remove all rust and scale by scraping or wire brushing.

WARNING

Under no circumstances shall flammable material be used near an open flame. Otherwise injury or death may result to personnel.

(b) Remove oil and grease deposits from machinery to be repainted with kerosene, ASTM D3699.

WARNING

Degreasing Solvent, MIL-PRF-680, is combustible and toxic to eyes, skin, and respiratory tract. Wear protective gloves and goggles/face shield. Avoid repeated or prolonged contact. Use only in well ventilated areas (or use approved respirator as determined by local safety/industrial hygiene personnel). Keep away from open flames or other sources of ignition.

Aliphatic Naphtha is extremely flammable and toxic to eyes, skin, and respiratory tract. Wear protective gloves and goggles/face shield. Avoid repeated or prolonged contact. Use only in well ventilated areas (or use approved respirator as determined by local safety/industrial hygiene personnel). Keep away from open flames, sparks, or other sources of ignition.

(c) Wipe surface with a clean cloth moistened with a grease-free solvent, such as Degreasing Solvent, MIL-PRF-680, or Aliphatic Naphtha, TT-N-95. Repeat this procedure until machinery surfaces are completely clean.

(d) Bare spots resulting from scraping or chipping should be sanded to a feather edge and spot primed with lacquer proof primer, Federal Specification TT-P-664. Allow priming coats to dry thoroughly and apply two coats of enamel, Federal Specification TT-E-489, in prescribed colors.

Allow first coat to dry thoroughly before applying second coat.

NOTE
Machines shall not be operated during painting operation.

d. *Equipment Maintenance Form*. The equipment maintenance form is explained in the following paragraph.

DD Form 314. This form, properly initiated, shall be attached to each piece of equipment. The preventive maintenance requirements shall be accomplished and noted by operator by placing his initials in the appropriate block.

2-5. Hangar and Shop Safety. All supervisory personnel in Army hangars and shops are responsible for a continuing and effective shop safety program. To implement and maintain this program, shop supervisors will utilize bulletin boards, signs, and any other effective method. Shop personnel will cooperate in the shop safety program by making helpful recommendations, and continually exercising care and caution in the operation of all shop equipment. The following paragraphs describe electrical, machine tool, and fire safety precautions.

a. *Electrical Safety*. The following electrical safety precautions shall be observed in Army hangars and shops.

- Ensure that all unauthorized personnel are clear of area before opening valves or energizing electrical circuits for starting machinery.
- Electrical tools must be connected to a low resistance ground.
- Electrical cables and air hoses to portable units will be laid out so there is no danger of tripping.
- Whenever possible, aircraft batteries will be disconnected when undergoing maintenance performed in the hangar.
- Substantial low resistance conductors shall be used to ground all stationary and portable machines, equipment, or other devices in which static charges may be generated, or which require electrical circuits of a hazardous nature.
- All switches and electrical equipment shall be of the enclosed explosion-proof type.
- All metal apparatus shall be grounded to avoid the danger of igniting test fluid fumes or creating electrical shock.

b. *Machine Tool Safety*. Machine Tool safety precautions are explained in the following paragraphs.

(1) Face shields and safety glasses. Personnel operating machinery shall wear eye protection as prescribed. A protective face shield or safety glasses shall be worn when operating a grinder regardless of whether grinder is equipped with attached shields.

(2) Drilling, grinding, or sawing precautions. The following safety precautions shall be observed when drilling, grinding, or sawing.

- Clamp work securely so that work will not move.
- Stop machine prior to attempting to adjust work that has become lammed.
- Cutting tools must be kept sharp.
- Allow chuck to come to a stop on its own accord. Do not use hand pressure to stop a spinning chuck.
- Do not set tools while power is on. Examine tools and chucks for cracks and defects prior to use.
- Stand to one side of grinding wheel when it is first started to avoid injury in case wheel fractures.
- Wear suitable gloves in addition to goggles when buffing.

c. *Fire Safety*. Unsafe equipment and fire hazards are the main factors to be observed while planning safety procedures for hangars and shops. Unsafe equipment shall be reported immediately. A constant vigilance must be maintained to seek out fire hazards. Fire hazards are constantly present in the shop where sparks, friction, or careless handling can cause

an explosion that may destroy equipment or buildings, and injure or kill personnel. Refer to AR 385-10, Army Safety Program and The Occupation Safety and Health Act of 1971.

(1) Classifications of fires . Fires are classified as follows.

- Class A fire (wood, paper, trash, etc). Use water or soda-acid fire extinguisher.
- Class B fire (oil, paint, fuel, grease, etc). Use bromotrifluoromethane or carbon dioxide fire extinguisher.
- Class C fire (electrical equipment). Use bromotrifluoromethane or carbon dioxide fire extinguisher.
- Class D fire (combust ible metals) magnesium, titanium, zirconium, sodium, lithium, and potassium. Use dry powder type fire extinguisher.

(2) Types of fire extinguishers . Types of fire extinguishers are listed below.

- Soda-acid (class A fires)
- Bromotrifluoromethane (class B and C fires)
- Carbon dioxide (class B and C fires)
- Dry powder (class D fires)

(3) Use of fire extinguishers . Operate fire extinguisher as follows:

(a) Pull ring pin.

(b) Point horn close to fire.

(c) Depress trigger for discharge, an d keep base of flames covered.

WARNING

Do not remove cylinder head until extinguisher has been fully discharged. Injury to personnel may otherwise result.

(d) Replace with new cylinder immediately.

(4) Inspection requirements for fire extinguishers . Inspect fire extinguishers in accordance with the manufacturer inspection procedures.

(5) Identifying fire extinguishers . Since fire extinguishers can be exchanged readily among aircraft, a means is required to identify and assure control of inspection cycle. To accomplish this, all portable, hand-operated fire extinguishers intended for use in Army aircraft will be tagged as follows:

- All serviceable fire extinguishers installed in aircraft will have a DD Form 1574 (Serviceable Tag Materiel) attached. The DD Form 1574 will show next inspection due, as stated in DA PAM 738-751.
- Fire extinguishers are considered unserviceable if the gross weight stamped on data ring, as shown in figure 2-3, is not legible or the data ring is missing.
- Fire extin guishers determined unserviceable or requiring a scheduled inspection will be replaced with a serviceable fire extinguisher, tagged with a DD Form 1574.
- Fire extinguishers received through supply channels that are in original manufacturer's packaging and show no evidence of damage shall be considered serviceable and will be tagged accordingly, prior to installation in aircraft.

(6) Location of fire extinguishers. Fire extinguishers shall be located throughout the shop in readily accessible areas.

(7) Marking of fire lanes . Fire lanes shall be marked and kept clear for emergency personnel should fire occur.

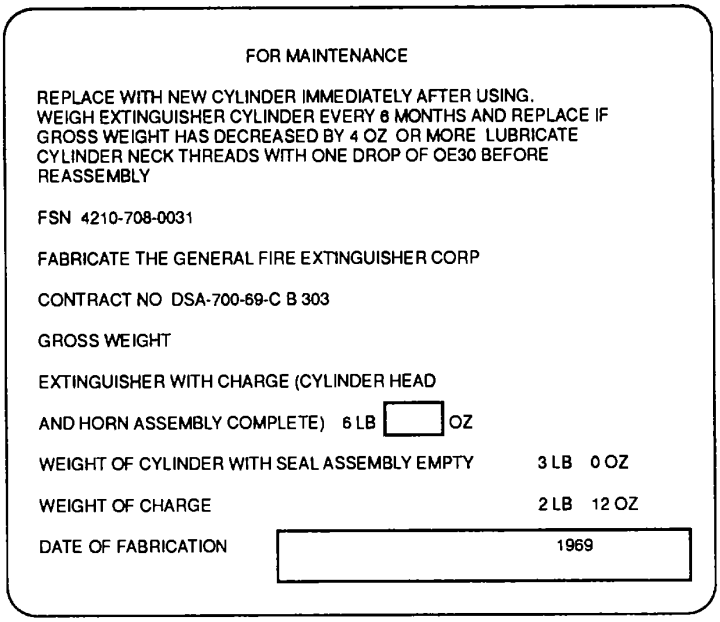

FIRE EXTINGUISHER DELIVERED COMPLETE
WITH CYLINDER HEAD AND HORN ASSEMBLY

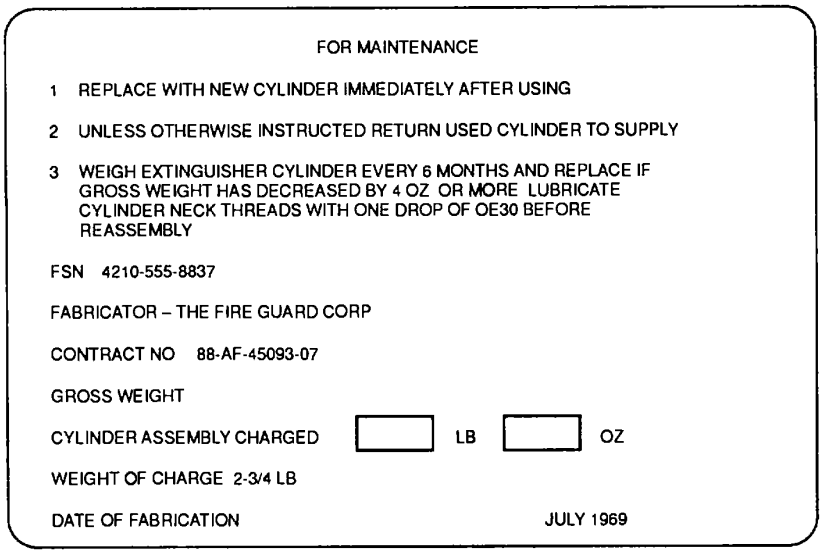

FIRE EXTINGUISHER CYLINDER DELIVERED
LESS CYLINDER HEAD AND HORN, REQUIRES
ASSEMBLY BEFORE WEIGHING FOR GROSS
WEIGHT

Figure 2-3. Fire Extinguisher Nameplates

(8) ***Fire fighting equipment requirements.*** Fire f ghting equipment requirements are listed as follows:

- Personnel shall be trained in the use, knowledge, and location of shop f re f ghting equipment.
- Each shop shall be equipped with f re extinguishers suited for type f re most likely to occur.
- Oily waste, rags, and similar combustible trash shall be discarded in self-closing metal containers which shall be emptied daily.
- Flammable supplies shall not be stored in the shop.
- Use correct f re extinguisher for class of f re.

2-6. PARKING OF AIRCRAFT AND EQUIPMENT IN HANGARS. The following paragraphs explain the parking of aircraft and equipment in hangars.

a. ***Safety Lanes*****.** Safety Lanes should be clearly marked and kept clear of parked aircraft and equipment. The width of f re lanes between parked aircraft should be slightly greater than the wing span of parked aircraft in order to facilitate removal of any one aircraft from parking area and also to permit ease of movement for mobile f re f ghting equipment within the area.

b. ***Parking of Aircraft in Hangars*****.** Aircraft parked in hangars shall be spaced a suff cient distance apart to provide adequate clearance for maintenance, servicing, and f re lanes. Observe the following parking precautions:

NOTE

Aircraft shall be secured in accordance with the existing mooring instructions contained in the applicable aircraft maintenance manuals.

- The direction in which the aircraft are to be parked shall be determined by ease of maintenance and servicing.
- Parking arrangement shall vary to utilize local space facilities to the maximum. Double row lateral parking, with f rst and second rows of aircraft placed tail to tail, shall be accomplished where possible.
- Aircraft shall be static-grounded from basic structure of aircraft to a low resistance ground.
- After parking aircraft, chock securely and release parking brake.

c. ***Parking of Aircraft with Fuel Tanks Less Than Full*****.** Aircraft shall have all fuel cells fully serviced prior to being parked or stored in a hangar. All fuel cells should be full in order to minimize the presence of f ammable vapors within the fuel cell (for safety purposes) and additionally to minimize water condensation and subsequent microbiological growth which results in contamination of the fuel.

NOTE

This procedure should be adhered to at all times, except when impending mission requirements shall necessitate a reduced fuel load or when an aircraft shall require maintenance to the fuel system.

d. ***Usage of Drip Pans*****.** Drip pans shall be placed under aircraft engines to collect oil. Drip pans shall be emptied daily.

e. ***Location of Static Ground Points*****.** Static ground points are located throughout the hangar for static grounding of aircraft. The grounding point is marked by a yellow circle 18 inches in diameter, with a 2 inch black border surrounding it. The words STATIC GROUND CONNECTION and a numeric or alphanumeric identif cation of the grounding rod shall be stenciled in black on the yellow circle.

f. ***Testing of Static Ground Points*****.** The electrical resistance of each grounding system should be as low as possible but not greater than 10,000 ohms. A log must be kept for permanent or semi-permanent air-f elds to show the identif cation of each rod, the date tested, and the reading in ohms. If the measured resistance of a rod is greater than 10,000 ohms, the rod should immediately be marked DEFECTIVE DO NOT USE and it should be removed or replaced as soon as possible. A log is not required at temporary refueling points. Each ground rod must be inspected when it is installed. Ground wires are inspected monthly. The grounding system mus t be inspected and tested

annually or when there is a possibility of mechanical damage. If any damage is found, it must be repaired immediately.

g. *Static Grounding of Aircraft*. All aircraft parked in a hangar must be grounded (earthed) at all times.

h. *Static Grounding of Ground Support Equipment*. Ground support equipment in a hangar must be grounded (cable or power cord) at all times when in contact with the aircraft being worked on.

i. *Emergency Evacuation of Aircraft from Hangar*. A plan for the emergency evacuation of aircraft from a hangar must be established and implemented by the maintenance officer using the expertise of the aviation safety officer and other applicable elements. Care must be taken to ensure the safe evacuation of as many aircraft as possible in an emergency.

2-7. JACKING AND HOISTING. General instructions for jacking and hoisting are explained in the following paragraphs. For specific instructions on a particular aircraft, refer to the applicable maintenance manual.

a. *Jacking*. Use the following procedures for in and out of hangar jacking:

(1) Do not stand, sit, or lie inside or on aircraft during raising or lowering operations.

(2) Ensure that all stress panels are installed on aircraft.

(3) Disengage aircraft brakes and remove chocks.

(4) Place all jacks on a level surface so that an imaginary line drawn through any 2 feet of jack will be parallel to fuselage or load to be jacked. Jack only at specified jack points.

(5) Position auxiliary supports as necessary to adequately prevent accidental injury to personnel or damage to aircraft.

NOTE

Place tail stands under all aircraft equipped with tricycle landing gear. Secure a ground-supported weight to tail of conventional gear aircraft. When tail wheel is to remain in contact with ground, lock it after aircraft reaches desired height. Leave tail wheel free to roll fore and aft during jacking and lowering operations.

(6) Operate all jacks simultaneously, both up and down, to prevent binding of aircraft struts. Binding may be corrected by tapping strut with a rawhide mallet or kicking tire.

(7) Ensure that there is sufficient clearance above aircraft to complete desired operation.

WARNING

Aircraft on jacks shall be so labeled, and access restricted to prevent injury to personnel.

CAUTION

Unauthorized persons will not be in, on or under aircraft supported by jacks. Areas shall be restricted by proper warning signs and barriers to preclude entry into the area.

NOTE

The use of auxiliary supports is recommended, but not required, as standard jacks are designed to withstand all vertical loads. When several people are to be working on the aircraft, auxiliary supports are highly recommended.

(8) Do not jack aircraft when wind velocity is greater than maximum amount specified in applicable maintenance manual. When applicable maintenance manual does not list a maximum wind velocity, a velocity of 15 miles per hour will be considered maximum.

(9) Head aircraft into prevailing wind when wind velocity does not exceed velocity given in step (8).

(10) After jacks are extended, make no attempt to lock hydraulic ram in place by use of a clamp. Jacks with threaded collar locks or locking pins will not permit load to lower, but may require additional lift to disengage collar lock or remove pin.

(11) Prior to lowering aircraft, make a careful inspection to ensure that retractable gear (when applicable) are in down-and-locked position, ground locking devices are installed, and that there are no maintenance stands, support equipment, or other objects under aircraft.

(12) After aircraft no longer rests on jacks, remove jacks from under aircraft as quickly as possible.

b. *Hoisting*. Use the following procedures for in and out of hangar hoisting:

CAUTION

Hoist aircraft out-of-hangar only when wind is calm. Otherwise damage to aircraft may result.

(1) Remove all excess items such as baggage, etc, from aircraft. Do not allow personnel in or on aircraft during hoisting operations.

(2) Apply ballast as required by applicable maintenance manual.

(3) Attach hoist sling at hoist location specified in applicable maintenance manual.

(4) Ensure that th ere is sufficient clearance above aircraft to complete desired operation.

(5) Fasten ropes to mooring points of aircraft and use ropes to steady and guide aircraft during hoisting operation.

(6) Hoist aircraft cautiously and smoothly, avoiding sudden starts, stops, and drops.

(7) Ensure that retractable gear down-lock pins are installed prior to lowering aircraft.

(8) Ensure that all maintenance and support equipment which could injure personnel or damage aircraft is removed from under aircraft.

CHAPTER 3

FLIGHTLINE OPERATIONS

3-1. General. General flightline operations used on all aircraft are described in the following paragraphs.

3-2. Flightline Safety. To avoid injury to personnel or damage to aircraft, the procedures and general safety rules will be followed when servicing, operating, mooring, maintaining, or moving aircraft on the ground.

a. Hearing Protection. Noise levels reached during ground runup of Army aircraft are of a level that may cause permanent hearing loss. Maintenance personnel shall wear adequate hearing protection when working on aircraft with engines in operation.

b. Foreign Object Damage. To prevent Foreign Object Damage (FOD), the following precautions shall be observed during maintenance of turbine engines.

- Regularly police parking areas, runways, taxiways, and runup and exhaust areas to ensure against the presence of foreign objects which could enter the engine. Special attention shall be given to cleaning of cracks and expansion seams in hard surfaced areas where engines will be operated. Tests have indicated that these are the main source of foreign objects which are ingested.
- Periodically instruct personnel concerned with aircraft maintenance of foreign object hazards to ensure that maximum preventive measures are taken.
- Ensure that air inlet and tailpipe dust excluders are installed at all times when engines are not being operated, except when it is known the engine will again be operated immediately following shutdown.
- Prior to each engine start, thoroughly inspect and clean inlet ducting. Remove all loose nuts, bolts, tools, or other objects which would cause engine damage and possible subsequent failure.
- After work has been accomplished, inspect to ensure that all accessories and attaching parts are secure and that work areas are cleared of foreign objects prior to engine operation.
- Provide properly marked receptacles in all work areas into which trash, ferrous and nonferrous scrap, safety wire, etc, may be placed.
- Adhere to applicable gas turbine-powered aircraft taxiing and parking procedures as outlined in applicable technical bulletins. This minimizes damage due to material being thrown by the exhaust blast into the intake of other aircraft.
- Ensure that gas turbine-powered aircraft takeoff and landing procedures are such as to avoid the intake of foreign objects blasted from runways and runway shoulders by preceding aircraft.
- Use inlet duct runup screens during all ground operations, including taxiing to and from takeoff position.
- Inlet duct runup screens are not required on aircraft using centrifugal flow engines.
- When necessary to properly evaluate engine performance or when icing conditions exist, inlet duct runup screens should be removed. Runup with screens removed shall be made in a designated, thoroughly cleaned area.

CAUTION

Inlet duct runup screens shall not be installed and removed with engines operating above idle rpm. Loose items of clothing shall not be worn. Objects which might be drawn into the intake ducts shall not be carried when installing or removing screens. Damage to equipment may otherwise result.

- Inlet duct runup screens may be left off during taxiing to and from takeoff position when requirements or existing conditions make the use of screens impractical. Since specific conditions warranting removal of screens as specified above cannot be predetermined, specific conditions may be determined by each command as necessary to conduct their operations. Approval of screen removal should include any additional precautions necessary to assure safe operation of engines.

- Use only nonmetallic-head hammers when required to install parts on engine.

c. *Safety Around Aircraft* . The following safety precautions shall be employed to ensure safety around helicopters on the flightline.

- Stand clear of plane-of-rotation of engine cooling fan during operation.

- Stand clear of tail rotor plane-of-rotation during operation.

- Main rotor blades tend to droop at decreased speeds, approach with caution, especially blades with a low plane-of-rotation.

WARNING

Personnel shall exercise extreme caution when hand-pulling a propeller to keep their bodies as clear of the plane-of-propeller-rotation as conditions permit. Ground crew-members should be conscious of the fact that an accidental start may occur at any time, and should therefore be alert to jump clear in such an event. A suitable length of canvas strap or similar material, without metal fittings, may be placed around propeller blades to facilitate hand-pulling. Be especially certain that the ignition switch is in the OFF position before turning propeller by hand. Death or injury may otherwise result.

d. *Parking and Mooring*. The following instructions are general in nature, and are applicable to Army aircraft. For specific instructions on parking and mooring particular aircraft, refer to the applicable maintenance manual. The following are general precautions for all aircraft.

- Do not park or moor aircraft closer than wing or rotor span, except by authority of the commanding officer or his designated representative.

NOTE

When aircraft are to be parked in rows, position aircraft in adjacent rows to most effectively reduce propeller wash during engine operation.

- When possible, park aircraft in such a location that transparent enclosures are not in direct rays of sun.

- Install gear locking devices (when applicable).

- Attach mooring ropes to aircraft and ground fittings at an angle of approximately 45 degrees. Attach mooring ropes and install mooring devices as specified in applicable maintenance manual.

NOTE

Allow sufficient slack in the mooring rope to prevent stress on ground fittings, rope, mooring devices, or aircraft structure due to tire or strut inflation/deflation, or wet rope shrinkage.

- Place fully charged, 50 pound carbon dioxide type fire extinguishers in readily accessible areas where aircraft are parked.

- When aircraft are to be moored for storage, they shall not be parked less than 750 feet from center of nearest taxiway. Provide adequate clearance for maintenance, servicing, fire lanes and taxiways.

- All aircraft parked inside enclosures will be grounded at all times.

- Place chocks fore and aft of main landing gear wheels. Do not use parking brakes as substitutes for chocks. Use steel chocks for snow or ice operating only. Use sandbags on steel matting. Use wooden chocks for all other operations. Set brakes only after they have cooled.

NOTE

Do not set brakes of aircraft in a hangar or outside during subzero temperature.

- Service aircraft systems as required by applicable maintenance manual. Exercise care during servicing to prevent moisture from entering systems being serviced.
- Avoid parking aircraft in wet or slushy areas saturated with fuel or oil.
- Install pitot tube covers and wheel covers.
- Move controls to neutral position and lock by either internal or external means.
- When parking helicopters overnight for storage, or during adverse weather, set ground handling wheels (when applicable) in retracted position.
- Rotate or fold main rotor blades (when applicable) in accordance with instructions contained in applicable maintenance manual.

e. *Preparation of Aircraft for Storms*. The following general precautions are to be observed when storms are anticipated:

- Install all protective covers and shields to protect aircraft from accumulation of snow, frost, or ice.

NOTE

If wings are wet or a freezing rain is expected, cover aircraft with a coat of anticing and deicing-defrosting fluid, MIL-A-8243, before installing fabric covers.

- Refer to the applicable aircraft maintenance manual for the use of spoilers if severe wind is expected.
- Ensure aircraft is chocked and tied down in accordance with applicable maintenance manual storm procedures.
- In case of emergency, tie down aircraft using trees or arctic-type (dead-man) mooring anchor.

f. *Flightline Equipment*. All flightline equipment should be inspected and functionally checked to ensure safety prior to use.

(1) *General inspection.* The following paragraphs describe inspection requirements for flightline equipment.

(a) *Cleanliness*. Inspect equipment internally and externally for cleanliness. Equipment will be dry and free of mud or other debris.

(b) *Serviceability*. Perform serviceability inspection of all new equipment.

(c) *Lubrication*. Lubrication will conform to the applicable maintenance manual.

(d) *Oil seals*. Inspect oil seals for leakage. Oil seals that are wet and show only a slight drip, after operation or standing, are considered as seeping and are acceptable. Seals that show definite leakage will be replaced.

(e) *Performance*. Ensure that ground support equipment is in such condition that its performance will approximately equal new equipment and meet all general safety requirements.

(2) *Functional check. T*he following procedures explain functional checks for flightline equipment.

(a) Check all levers, switches, valves, shutters, etc., to ensure proper operation.

(b) Check all meters and gauges for proper operation and adjustment.

(c) Check powered ground support equipment for operation at peak, rated output, and capacity for which it was designed.

(d) Check nonpowered ground support equipment for performance capabilities within the purpose for which it was designed.

(e) Check equipment for unusual noises during operation. An unusual noise is any sound that indicates malfunction or improper operation of a component.

g. Reflectorizing of Equipment. All non-tactical ground support equipment (which is normally painted yellow) will be outlined with reflective tape to ensure high visibility during low light level operations.

(1) Outlining. Equipment shall be marked in a manner to outline the entire piece of equipment, so that during periods of low visibility the entire outline of the equipment will be obvious. Outline using the following procedures:

(a) Outline the equipment with 4-inch wide silver-white tape conforming to Federal Specification L-S-300, NSN 9390-00-949-8047.

(b) Compound surfaces (corners, large bolts, rivets, etc.) may be left unmarked.

NOTE

If area to be striped can not accommodate 4-inch wide tape, use the widest width possible.

(2) Application of reflectorizing sheeting. The following procedures shall be used to apply reflectorizing sheeting, Federal Specification L-S-300:

(a) Clean surfaces of all loose sc ale and dirt by brushing or applying cleaning compound, Federal Specification P-C-437. Remove deposits of cleaning compound by washing with clear water. Dry surfaces with high-pressure compressed air.

(b) Measure reflectorizing sheeting and cut to desired lengths.

(c) Start removal of protective paper liner from adhesive by holding the tape reflective side in and flick one corner sharply in toward reflective face. When corner is loosened lay the reflective side of tape down on smooth surface and jerk the paper liner off to half the length of strip. Fold loosened paper liner.

(d) Position tape on equipment and adhere one edge with finger. Hold unapplied portion slightly away from surface to prevent premature adhesion. Wipe tape to surface with firm pressure, using a plastic squeegee. Remove remaining liner and apply remainder of tape. Any air bubbles should be pricked with pinpoint and air worked out with squeegee.

NOTE

Apply only when equipment surface temperature is above 60°F (16 °C). Activate adhesive lightly with a solvent activator as recommended by the reflective tape manufacturer.

(e) Apply clear edge sealer, as recommended by reflective tape manufacturer, to edges of tape to prolong life of marking.

(f) Repair to damaged reflective areas can be made without stripping of original material. Abrade any rough edges, clean damaged area thoroughly and apply a new piece of reflective tape over damaged area.

NOTE

The reflective tape cannot be subjected to paint oven baking process.

(3) Use of flags. All support equipment which cannot be taped (i.e., tactical vehicles, tractors, sweepers, occasional use vehicles, etc) will display a white-orange checkered flag conforming to MIL-F40047, NSN 8345-00-027-3704. The flag will be flown while on the flight line or any area in which aircraft may be present. The flag shall be mounted to facilitate easy removal when departing airfield area or when entering into a tactical condition.

3-3. Ground Handling. Aircraft shall not be moved where, or in such a manner that, injury to personnel or damage to the aircraft or property could result. Ensure tow tug drivers are trained to tow all types of aircraft prior to towing and exercise supervision when necessary. For specific instructions on a particular aircraft, refer to the applicable maintenance manual. Aircraft shall not be moved where, or in such a manner that injury to personnel or damage to the aircraft or property could result. The following paragraphs contain general procedures for ground movements, towing, pushing, and standard visual signals.

a. *General Procedures*. The following procedures are for all ground movements:

(1) Disconnect and move clear all ground support, ground servicing, and maintenance equipment not essential to movement of the aircraft.

(2) Assign an authorized ground crewmember to operate aircraft brakes, as required, from the time chocks are removed until they are reinstalled.

(3) Assign a ground crewmember to stand near tip of each wing to act as a guide during ground movements.

(4) Stand clear of aircraft immediately prior to and during movement.

(5) Assign a qualified ground crewmember to direct departure from, or approach to, a parking position. Only approved standard signals will be used. Use a flashlight or luminescent wand to signal instructions at night.

(6) Do not stand, sit, or lie on any external portion of an aircraft while it is in motion. Do not jump from or board a moving aircraft.

(7) When moving aircraft, avoid sudden stops and starts.

(8) No person, vehicle, or aircraft shall approach close to an oncoming taxiing aircraft, pass closer than 200 feet to the rear of an operating turbine-powered aircraft, or pass closer than 100 feet to the rear of other operating aircraft.

(9) Do not taxi or tow aircraft, or start or runup engines within 50 feet of any fuel, oil, or water-alcohol servicing operation, or within 50 feet of any spill until the spill has been removed and the area rendered safe.

b. *Towing*. Tow aircraft in accordance with the applicable maintenance manual. The following procedures are for general towing of all aircraft.

(1) Prior to towing aircraft, ensure that towing attachments, lines, and bars are of adequate capacity, serviceable, and secured firmly to designated towfittings of aircraft and tow vehicle.

(2) Do not exceed the walking speed of the slowest team member, with a maximum speed of 5 mph. Tow with extreme care over ice, snow, rough, rocky or muddy ground and in congested areas.

(3) Use caution when towing aircraft in extremely low temperatures to prevent damage to hydraulic seals which would result in strut leakage.

c. *Pushing*. Push aircraft by hand in accordance with the applicable maintenance manual. The following procedures are for general hand moving of all aircraft:

WARNING

Keep clear of skids, aircraft wheels, and/or ground handling wheels.

(1) Position ground handling wheels (when applicable) in down-and-locked position.

(2) Apply physical pressure for pushing, lifting, and turning only at authorized pressure points as designated in applicable maintenance manual.

(3) Push by hand at proper pressure points.

(4) Senior person will brief duties and dangers of ground handling aircraft.

d. *Standard Visual Signals*. Visual signals for movement of Army aircraft are contained in FM 1-105 or FM 21-60.

3-4. STATIC GROUNDING OF AIRCRAFT. Standard grounding of aircraft is explained in the following paragraphs.

a. *Grounding Requirements*. Positive requirements for grounding or bonding of aircraft are as follows:

NOTE

Grounding of aircraft during refueling is no longer required by NFPA standards 77 and 407. Grounding will not prevent sparking at the fuel surface. (See Chapter 2, Section III for more information).

- All aircraft parked outside will be grounded and bonded, in accordance with FM 1-500, to the aerospace ground equipment while servicing (i.e., fueling or defueling, arming ammunition or explosives, oxygen, hydraulic fluids, or any flammable liquids). Grounding is not necessary for aircraft parked outside unless one of the above is being accomplished.
- Grounding of aircraft is required when external power is applied to the aircraft.

- All aircraft parked in a hangar must be grounded at all times.
- Deleted

b. *Earth Grounds*. An earth ground (electrode) is a conductive pipe or rod made of galvanized iron, galvanized steel, or copperweld steel. The rod regularly used for grounding is Rod, Ground: MX-148G Line Item Number (LIN) S08698, National/NATO Stock Number (NSN) 5975-00-224-5260. This ground rod is ¾ inch in diameter and 6 feet long, and it is made of galvanized steel. It has one pointed end to be driven into the earth and a bolt and nut at the other end for connecting a grounding cable.

(1) *Use of earth grounds*. The rod is driven into the earth far enough to reach below the permanent ground-moisture level. On the apron or ramp of a fixed airfield, the top of the rod should be level with the surrounding surface; at other types of facilities, the top of the rod should be either low enough or high enough so that people will not trip over it. If the top of the rod is level with the surrounding surface, an area around the top of the rod must be dished out so ground cable clips can be attached to the rod.

(2) *Marking of earth grounds*. A yellow circle 18 inches in diameter, with a 2-inch black border surrounding it, should encircle each rod that is installed in a hard surface. These circles should be painted on. The words STATIC GROUND CONNECTION and a numeric or alphanumeric identification of the rod should be stenciled in black on the yellow circle. The number and spacing of fixed rods should be determined by the requirements of the local situation. Markings of this type are not required for temporary ground rods.

c. *Earth Ground Testing*. The electrical resistance of each grounding system should be as low as possible but not greater than 10,000 ohms. A log must be kept for airfields to show the identification of each rod, the date tested, and the reading in ohms. If the measured resistance of a rod is greater than 10,000 ohms, the rod should immediately be marked DEFECTIVE-DO NOT USE and it should be removed or replaced as soon as possible. A log is not required at temporary refueling points.

(1) *Frequency of testing*. Each ground rod must be inspected when it is installed. Ground wires are inspected monthly. The grounding system must be inspected and tested every five years or when there is a possibility of mechanical damage. If any damage is found, it must be repaired immediately.

(2) *Method of testing*. Ground rods are tested with a multimeter (Multimeter: TS-352B/U, LIN M81372, NSN 6625-00-553-0142). Refer to FM 10–67–1 for specific procedures when testing ground rods.

d. *Fabrication of Ground Cable*. Fabricate static grounding cable assembly, as shown in figure 3-1, using the following procedures:

(1) Cut wire rope (figure 3-1, 1) to length needed.

(2) If coated wire rope (1) is used; remove ¾ inch of coating from each end.

(3) Loosen set screws (4) in clip (5).

(4) Insert wire rope (1) into handle of clip (5) and tighten set screws (4).

(5) Insert unattached end of wire rope (1) through cap (2). Rope will extend past end of cap.

(6) Screw cap (2) into plug (3).

(7) If desired, clips (5) may be attached to both ends of wire rope (1) with a plug (3) attached to handle of one of the clips as follows:

(a) Cut short length of wire rope to attach plug to clip.

(b) Assemble items for alternate configuration as in (2) through (6) above. See detail A for view of alternate cable assembly.

NOTE

Never fasten electrical clip to a painted surface.

(8) Insert plug into receptacle on aircraft. Attach clip to grounding stake.

(9) Attach warning streamers, NAS 1756-12 or MS 51700-12, to coated wire rope.

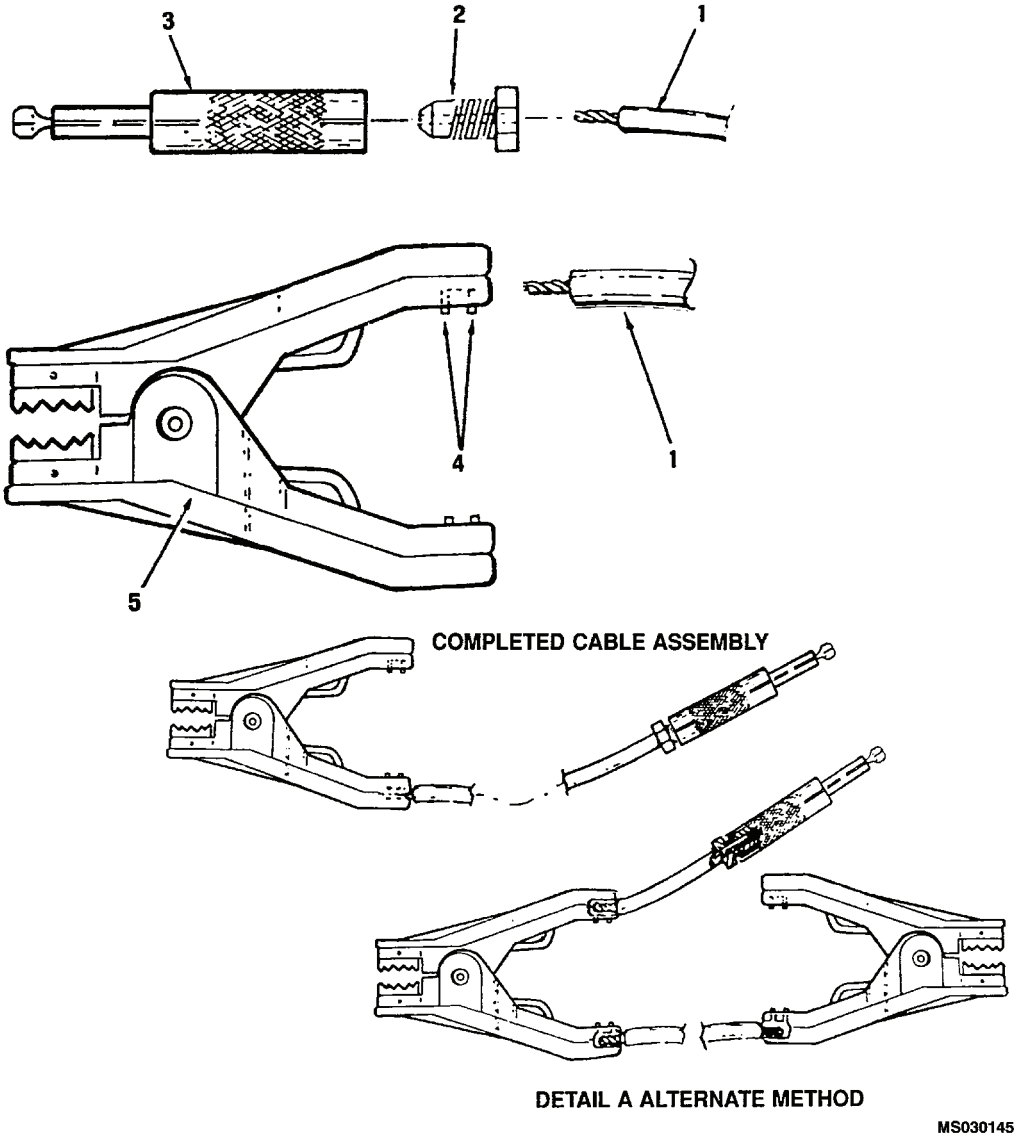

KEY TO FIGURE

1. 4010-00-286-2681 ROPE, WIRE (COATED)

(ALT.) 4010-01-145-8455 ROPE, WIRE (NON-COATED)

5935-00-572-5174 PLUG-TIP,

CONSISTING OF:

2. CAP
3. PLUG
4. SET SCREW
5. 5999-00-134-5844 CLIP ELECTRICAL

Figure 3-1. Fabrication of Static Grounding Cable Assembly.

(10) Attach yellow ref ective tape, 9390-00-040-6102, to non-coated wire rope.

(a) Wrap tape around handles of clip and around the wire at three-foot intervals.

(b) Do not apply tape to those parts of plug and clip that complete electrical circuit.

(11) Test ground cable for resistance to ground.

e. Ground Receptacle Criteria. Aircraft grounding receptacles, as shown in f gure 3-2, shall conform to the following criteria:

- For internal and external tanks, the receptacle shall be installed at not more than 42 inches (1066.80 mm) and not less than 12 inches (304.80 mm) from the f ller opening.
- Receptacle can be grounded by mounting or bonding to aircraft structure.
- Receptacle shall be used with grounding plug conforming to MIL-C-83413/MIL-C83410.
- Dissimilar metals as def ned by MIL-STD-889 be used in intimate contact with each other.
- Place a fully charged f re extinguisher (50 lb CO_2 or 22 lb Halon 1211) in readily accessible area where aircraft are parked.

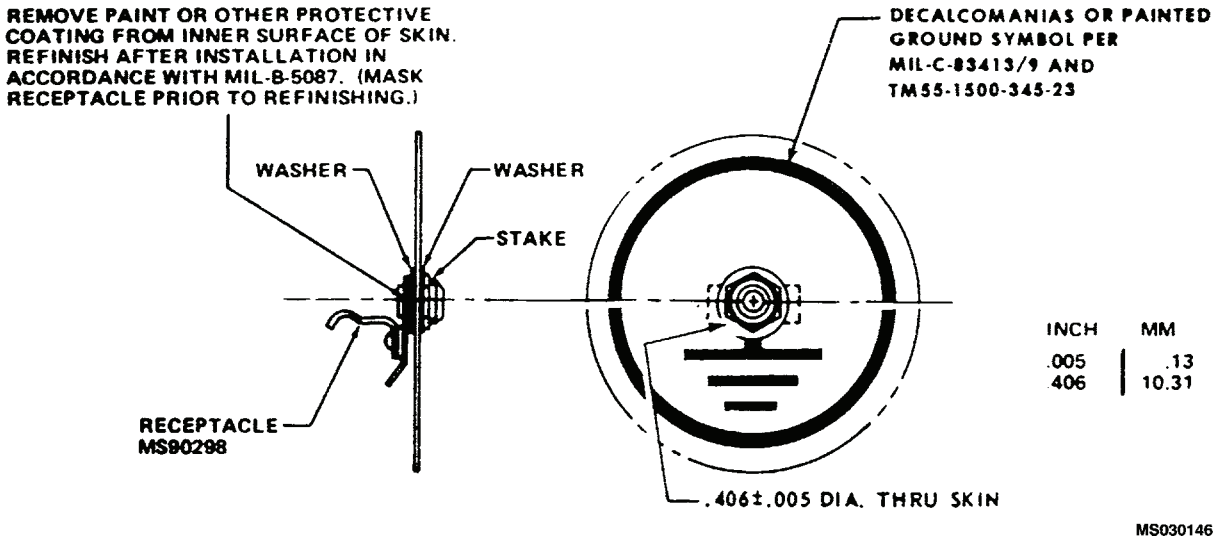

NOTES:

DIMENSIONS ARE IN INCHES UNLESS OTHERWISE SPECIFIED.

METRIC EQUIVALENTS (TO THE NEAREST .01 MM) ARE GIVEN FOR GENERAL INFORMATION ONLY AND ARE BASED UPON 1 INCH - 25.4 MM.

Figure 3-2. Aircraft Grounding Receptacle Installation.

NOTE

Precautions should be taken to ensure that these parking area extinguishers are periodically inspected and adequately marked to ensure high visibility (for ease of location in the event of an emergency and to prevent accidents during aircraft movement). Due to the smaller size of the Halon 1211 portable-type extinguishers, these bottles should be secured in a permanent location to facilitate recognition and prevent damage to the extinguisher.

f. ***Ground Receptacle Testing*****.** Test ground receptacle using the following procedures:

(1) Using an ohmmeter, check resistance from the receptacle to a point on the aircraft skin adjacent to the receptacle. Contact point used must be free of paint and corrosion and cleaned for good electrical contact. An ordinary ohmmeter set on R x 1 scale, will read a direct short or not more than 1 ohm.

(2) If resistance reading exceeds requirement of paragraph (1), receptacle must be removed and aircraft skin around it must be cleaned of paint and corrosion and treated per TM 55-1500-345-23. Reinstall the receptacle in accordance with MIL-C-83413/MIL-C-8349. Nut must be tight.

(3) Recheck ohmmeter reading as in step (1). If it does not meet requirement, repeat procedures

(4) Retouch paint as required per TM 55-1500-345-23.

g. ***Aircraft Fuel Port Testing*****.** Test aircraft fuel port ground using the following procedures.

(1) Use multimeter, TS352B/U, to check the resistance of aircraft fuel port to the skin adjacent to the fuel port. The contact on the fuel port and aircraft skin should be free of paint and corrosion for a good electrical contact.

(2) Set the multimeter on the RX1 scale. If the measured resistance is greater than 1 ohm, the aircraft fuel port must be removed. The aircraft skin around the fuel port must be cleaned of paint, corrosion and then treated in accordance with TM 55-1500-345-23. Reinstall fuel port in accordance with the applicable TM 55-1500-345-23 aircraft maintenance manual.

(3) Recheck OHM reading as stated in paragraph 3–4g(1). If it does not meet requirement, repeat procedure.

(4) When a satisfactory measured resistance has been reached, touch-up paint as required per TM 55-1500-345-23.

3-5. Aircraft Refueling. Servicing aircraft with fuel and defueling aircraft requires the utmost precaution due to the highly flammable characteristics of fuel. Personnel performing fueling and defueling operations must be thoroughly familiar with FM 10–67–1, Concepts and Equipment of Petroleum Operations. Personnel must also be completely familiar with the aircraft being serviced.

NOTE

Aircraft shall have all fuel cells fully serviced prior to being parked or stored in a hangar. All fuel cells should be full in order to minimize the presence of flammable vapors within fuel cell (for safety purposes) and additionally to minimize water condensation and subsequent microbiological growth which results in contamination of the fuel.

This procedure should be adhered to at all times; except when impending mission requirements shall necessitate a reduced fuel load or when an aircraft shall require maintenance to the fuel system.

a. ***Open-Port Refueling*****.** Open-port refueling is refueling by inserting an automotive-type nozzle into a fill port of larger diameter. Most of the Army fueling nozzles are designed for open-port refueling and must be used until enough FARE systems are deployed to make open-port aircraft refueling an obsolete practice. Because the port is larger than the nozzle, fuel vapors can escape through the fill port during open-port refueling operations. Airborne dust and dirt, as well as rain, snow, and ice can get into the fill port during refueling, thus lowering the quality of the fuel in the tanks and endangering the aircraft. Spills from overflowing tanks are possible in open-port refueling. Spills can also be caused by the sudden pressure surge that comes when pumping from another nozzle in the system is completed, throwing the whole pressure of the pump to the operating nozzle. Because of these dangers, hot refueling by the open-port method is restricted to combat or vital training or testing use. Refer to FM 10–67–1.

b. ***Open-Port Hot Refueling*.** In combat operations, the open-port method of hot refueling may be used for helicopters when, in the judgment of the aviation commander, the requirements of the tactical mission and the benefits of reducing ground time outweigh the inherent risks of this method of refueling. In noncombat situations, helicopters may be refueled by this method only when there are compelling reasons to do so. For example, aviation commanders may decide that hot refueling must be done for purposes of training, or for field testing or combat testing for development. When the FARE system is used for hot refueling in a training situation, a firewall should be built around 500-gallon drums whenever it is possible. Refer to FM 10–67–1.

NOTE

Nozzles of the open-port type must be held open by hand throughout use. If any automatic device has been added to the nozzle to hold it open, the device must be removed; if notches have been made to hold open, they must be filed off. No exceptions to this rule are allowed in aircraft refueling.

c. ***Rapid Hot Refueling*.** Aircraft may be rapid (hot) refueled (with engines running), electrical power on, radios on, weapons system on with safety covers/guards/switches in safe position, and with any computer systems operating that would require reprogramming if shut down. See the applicable aircraft operator's manuals (-10 and -CL) for detailed instructions. If rapid (hot) refueling is required (prescribed in FM 10–67–1), ground the aircraft properly. It is also recommended that the aircraft be in a revetment type shelter or separated from fuel storage by a fire wall.

WARNING

Only emergency radio transmissions should be made during rapid (hot) refueling. Radio switches may electrically arc when being keyed.

d. ***Fuel Truck Operations*.** Fuel truck operations are covered in the following paragraphs.

(1) ***Fuel truck types*.** The M49A2C tank truck with a 1,200 gallon stainless steel tank, the M559 tank truck with a 2,500 gallon stainless steel tank, and the M857 semitrailer with a 5,000 gallon tank are used to fuel Army aircraft.

(2) ***General operation*.** After the aircraft parks and its engine or engines are shut down, the rotor blades are secured, and armaments are set on SAFE, the sequence of the refueling operation can start. The following procedures are for all aircraft:

(a) Check the interior of the aircraft. No one should be aboard during refueling unless the pilot or copilot are on board to monitor the quantity of fuel to be loaded. When the D-1 nozzle is used, the only way of knowing when to stop flow is for the pilot or copilot to watch the fuel gauges in the aircraft.

(b) Drive the tank vehicle into position in front of the aircraft. Use the sort of approach route shown in figure 3-3. Do not drive the refueler directly at the aircraft because brake failure could cause a serious accident.

(c) Keep a distance of at least 10 feet between the refueler and the aircraft. There must be at least 10 feet between the refueler and rotor blades of a helicopter. Keep a distance of at least 20 feet between the exhaust pipe of the pump engine (or truck engine) and the aircraft fill port and tank vent as shown in figure 3-4.

(d) Park the refueler so that it has a clear and open path to drive away from the aircraft in an emergency. Do not detach a tank semitrailer from its tractor when refueling an aircraft; the tractor must be ready to pull the trailer away from the aircraft if the need arises.

NOTE

If the refueler can be driven into position without backing, do so. If it must be backed toward the aircraft, bring the truck to a full stop when it is 20 to 25 feet away from the aircraft or its rotor blades. Have another person act as a ground guide. Follow signals to guide the final backing approach until signaled to stop at the proper distance from the aircraft and its fill port and vent, as shown in figure 3-5.

(e) Stop the refueler engine (unless it powers the pump) and set the brake. Chock the tires of the refueler and of the aircraft if appropriate.

(f) Check the fuel in the tank to make sure it is the right type for the aircraft. Check the sight glass of the filter/separator to make sure all water has been drained out.

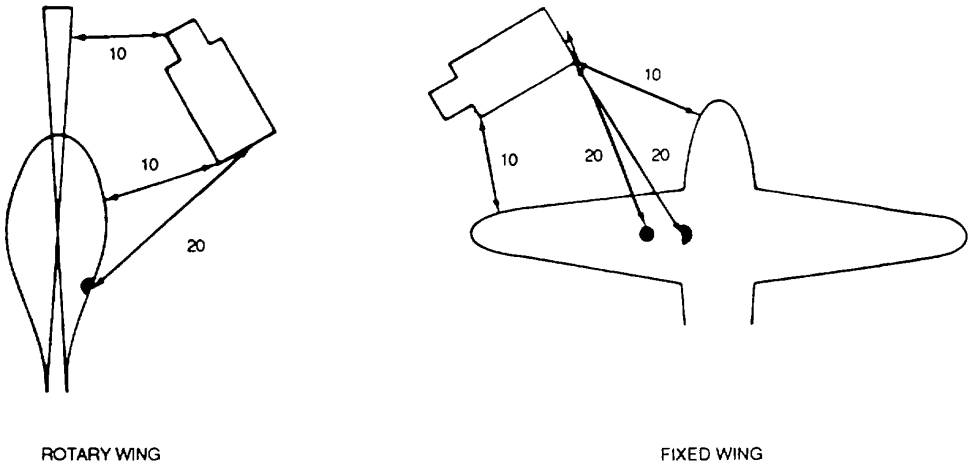

ROTARY WING

FIXED WING

NOTE
ALL VALUES ARE SHOWN IN FEET

Figure 3-3. Fuel Truck Approach Route

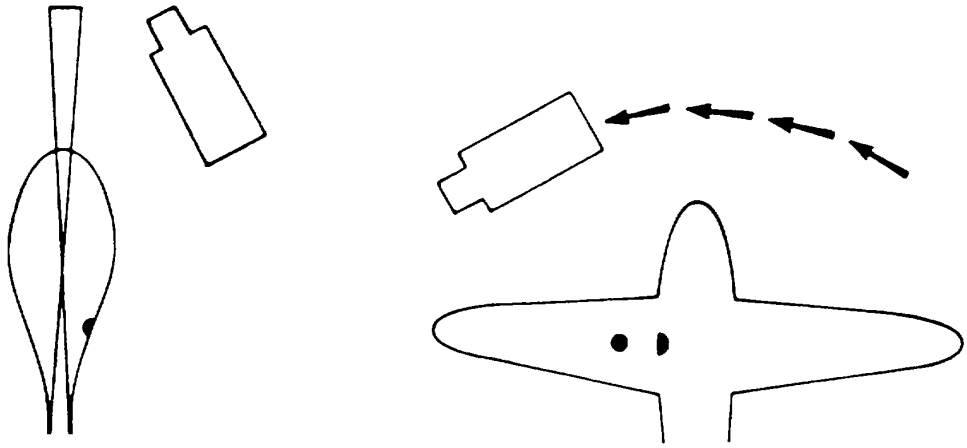

ROTARY WING
ENGINE(S) OFF ROTOR BLADES TIED DOWN

FIXED WING
ENGINE(S) OFF

Figure 3-4. Fuel Truck Required Spacing

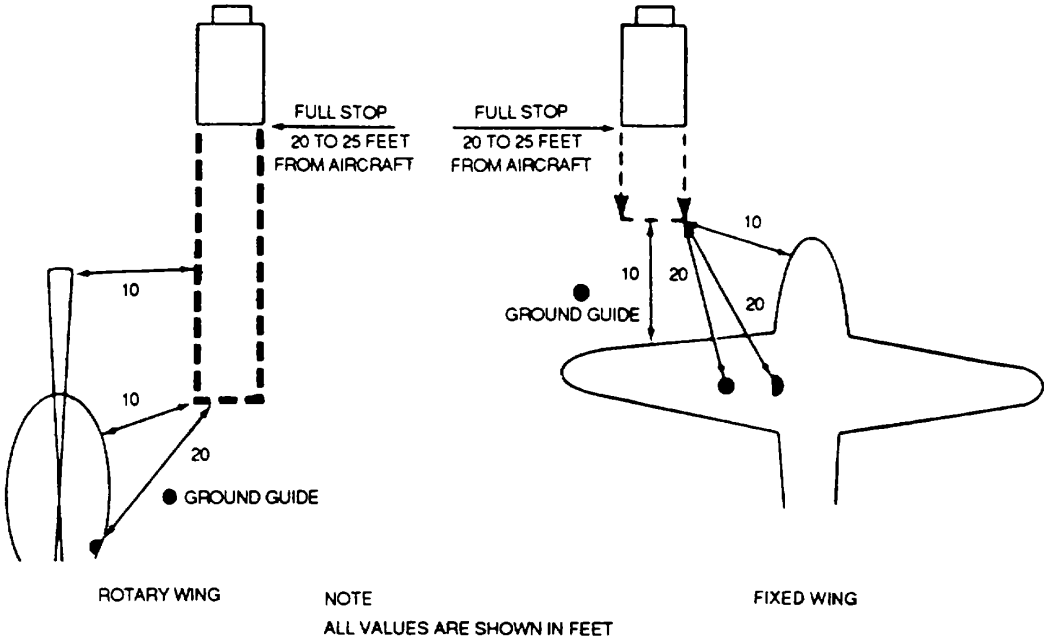

Figure 3-5. Fuel Truck Backing Approach

(g) Place the truck fire extinguisher by the pump. Place a fire extinguisher provided at the refueling point by the aircraft fill port.

NOTE

Have members of the ground crew or the air crew man these two fire extinguishers. If there are no people available to man the fire extinguishers, place the extinguishers near the pump and nozzle operators, but position them so that they will not be in the operators way and where they are not likely to be engulfed if a fire should start at either the pump or the nozzle.

(h) Unreel the ground cable and attach its ground-rod clip to the nearest ground rod. If refueling where no ground rod is installed, drive the refueler ground rod into the earth to the required depth and attach the clip to the rod.

(i) Ground the aircraft by attaching one end of a ground cable to the ground rod (either the rod that grounds the refueler or a separate ground rod) and the other end to a bare metal part of the aircraft.

NOTE

Use the axle of the landing gear or some other unpainted metal part, but do not clip the ground cable to the propeller or the radio antenna. Attaching this clip grounds the aircraft and bonds the refueler to the aircraft. If the refueler does not have a Y-cable that will ground both the refueler and the aircraft to one ground rod, a separate ground cable is required to ground the aircraft. A wire, such as building wire (type TW, number 14 AWG or larger, solid copper) or any other solid copper wire, size number 14 or larger, may be used.

(j) Bond the nozzle to the aircraft before taking the dust cap off the nozzle and the cap off the fill port. If the aircraft has a receiver for the bond plug, use the plug, if not, clip the alligator clip to a bare metal part of the aircraft.

(k) Open the aircraft fill port and remove the nozzle dust cap.

NOTE

When using an open-port nozzle or the CCR nozzle adapter, put the nozzle well down into the port. Do not open the nozzle until it is inside the fill port When using the CCR nozzle, mate the nozzle into the fill port. If they will not latch together, look for dirt in the fill port or on the nozzle. Wipe the fill port out and clean the nozzle, then mate the two together.

(l) Refuel using procedures outlined in FM 10-68.

(m) Replace the cap on the fill port and then replace the nozzle dust cap before disconnecting the nozzle bond.

(n) Remove the nozzle bond plug or undo the alligator clip Reel up the hose and nozzle Do not drag the nozzle across the ground.

(o) Undo the clip that grounds the aircraft Replace the fire extinguisher used at the nozzle.

(p) Release the clip on the ground rod and reel up the grounding cable. Do not drag the cable clips across the ground. If the refueling operation is over and the refueler ground rod was used, pull the rod up and stow it in the refueler. Replace the fire extinguisher in the refueler.

(3) Safety requirements . The following safety requirements must be followed when refueling Army aircraft.

- Do not allow any open flame, open-flame device, or lighted smoking materials within 50 feet of an aircraft refueling operation.

NOTE

Personnel who refuel aircraft may not carry lighters or matches on their persons and must not allow anyone else to carry a lighter or matches within 50 feet of an aircraft that is being refueled. Use of exposed-flame heaters, welding or cutting torches, and flare pots is forbidden within 50 feet of refueling operations.

- Do not allow electrically powered tools to be used in the refueling area.
- Do not allow any metalworking tools to be used within 50 feet of an aircraft being refueled.
- Do not use flashlights within 50 feet of the refueling operation unless the lights are of the approved explosion-proof type.
- Do not allow flashbulbs or electronic flash devices to be used within 10 feet of refueling equipment or the fill port or fuel tank vents of aircraft.
- Do not remove any piece of clothing while within 50 feet of a refueling operation or in an area where a flammable vapor-air mixture may exist.

NOTE

If fuel gets on clothing, leave the refueling area as soon as refueling is completed. Wet the clothes with water before taking them off if there is not enough water at the site to wet the clothes thoroughly, ground yourself to a piece of grounded equipment by taking hold of it with both hands before taking off the fuel-soaked clothes. A skin irritation from fuel is not fatal, the fire that may follow a static discharge from clothes may be.

- Do not enter a flammable atmosphere right after removing a garment. Wait at least 10 minutes before carrying the garment into such an atmosphere.

NOTE

Before opening an aircraft fuel port or doing anything else that would let fuel vapors escape into the air, bond yourself to the container by taking hold of it. If it is an aircraft or piece of metal equipment, take hold of a bare metal part with both hands for a few seconds. Although this bonding will not completely discharge the static electricity, it will equalize the charge with the charge on the piece of equipment.

- Do not refuel an aircraft until its engines are shut down, except as provided in hot refueling.
- Do not allow any work to be done on an aircraft's batteries while the aircraft is being refueled.

NOTE

The batteries should not be raised or lowered, and battery chargers should not be connected, used, or disconnected during refueling.

- Stop refueling operations when there are lightning discharges in the immediate area.
- Do not fuel an aircraft or store aviation fuel within 100 feet of the antenna of an airfield surface-detection radar.
- Do not fuel an aircraft or store aviation fuel within 300 feet of the antenna of an airfield approach and traffic control radar.
- Airborne surveillance units must be shut down before the aircraft approaches within 300 feet of a refueling or fuel storage area.
- A weather-mapping radar unit mounted in an aircraft must be shut down before and during refueling of the aircraft.
- Radio transmission from the aircraft being refueled is not allowed because of the danger of arcing.

NOTE

Restrict vehicle access to the refueling area, allow only those vehicles actually involved in servicing aircraft to come within 50 feet of the refueling operation. Vehicles used in and around refueling areas must be maintained to a high standard of performance to prevent the fire hazards of backfires and sparks. The electrical circuits of vehicles used in refueling operations must be maintained in top condition to prevent short circuits around defects.

(4) Fuel contamination. Care shall be taken when refueling to prevent fuel contamination. Sediment, water, microbiological growth, and mixed fuels can cause fuel contamination and danger for aircraft operations.

(5) Protective clothing. To date, no regular Army uniform (suitable for everyday field wear) has been developed for personnel who handle aviation fuels. Therefore, wear the standard combat uniform. Air crewmembers should wear the nylon fire-retardant uniform but should know that it loses its protective properties if it is saturated with a petroleum product. Because combat uniforms and flight suits are not impervious to petroleum, use great care in refueling operations to avoid spilling fuel on your clothing.

3-6. Oil Servicing . Oil servicing precautionary measures are required due to the flammable nature of oil. General precautions for oil servicing are the same as for fuel servicing. Additional safety precautions for oil servicing and draining are contained in the following procedures:

WARNING

To avoid contamination in oil supply for gas turbine and reciprocating engines, do not use previously opened cans of engine oil. A new sealed can of oil must be opened and used. When opening can, clean top and use a clean, sharp, unplated instrument to prevent contamination.

a. Install drip pans where practicable.

NOTE

Never use flammable solvents to remove oil spillage.

b. Exercise caution to prevent overfilling or spilling.

NOTE

When oil has been spilled, immediate action shall be taken to remove spillage from aircraft and adjacent area. Clean rags may be used to remove oil spillage from the aircraft. Sand, dirt, sawdust, or commercial products may be used to remove oil spillage from adjacent ground.

3-7. Oxygen Servicing. Oxygen servicing requires the utmost precautionary measures due to the highly explosive and flammable capabilities of oxygen. Prior to servicing an aircraft oxygen system, personnel shall familiarize themselves with the system, precautions, and instructions for handling gaseous oxygen, operation of servicing equipment, and potential hazards involved.

Only qualified personnel shall be authorized to operate equipment for servicing of an aircraft oxygen system. Damage to system may otherwise result.

a. ***Safety Precautions*****.** Aircraft shall not be serviced with oxygen when any of the following conditions prevail:

- Aircraft electrical switches are on.
- Ground powered equipment is operating within 50 feet of the servicing area.
- Aircraft is being serviced with fuel, oil, or anti-icing fluids.
- Any combustible items, such as fluid, etc., are evident around oxygen servicing equipment.

b. ***Servicing*****.** General servicing procedures for oxygen systems are explained in the following paragraphs.

Oxygen equipment shall be kept clean at all times. No organic matter or flammable substance of any nature shall be allowed to contact oxygen. Ensure that all components of the systems are free of moisture, oil and grease at all times. Oxygen is a nonflammable gas; however, it supports combustion and lowers the flash ignition point of all combustible materials. Oxygen shall be handled as a flammable gas.

When an aircraft is being serviced with oxygen within 50 feet of an area where smoking is permitted, NO SMOKING signs shall be placed at a 50-foot radius around the servicing area. A spark in the servicing area could cause an explosion and damage to equipment.

(1) To prevent overfilling of tanks, personnel shall observe aircraft oxygen system gauges at all times during servicing operation.

(2) Personnel shall be stationed at the oxygen servicing unit at all times during servicing operation to shut off unit valves immediately upon receiving a command from personnel watching aircraft system gauge.

(3) Service aircraft from cylinders clearly labeled DRY or AVIATOR'S BREATHING OXYGEN. Other oxygen may have moisture which could cause flow stoppage at temperatures below freezing.

(4) Always use a pressure-reducing device when servicing low-pressure oxygen system from high-pressure bottles.

(5) Fill oxygen system slowly to prevent explosion resulting from heat generated by filling too fast.

(6) An aircraft oxygen system not equipped with shutoff devices at cylinders shall be completely discharged of all pressure prior to removing components. All electrical power shall be turned off during oxygen discharge operations.

(7) Refer to the applicable aircraft maintenance manual for additional information and maintenance procedures.

3-8. Hydraulic Fluid Servicing. Hydraulic fluid servicing precautions are explained in the following paragraphs.

WARNING

To avoid contamination, do not use previously opened cans of hydraulic fluid. Cans of hydraulic fluid cannot be resealed. Immediately transfer unused hydraulic fluid to an approved airtight, pressure venting, stainless steel storage reservoir, an approved hydraulic servicing unit or a hydraulic test stand containing the same hydraulic fluid. When opening can, clean top and use a clean sharp, unplated instrument to prevent contamination. Can openers attached to the aircraft must be cleaned before using.

a. Do not overfill reservoir or spill fluid in surrounding areas. When fluid is spilled, absorb with clean rags.

b. When filling reservoirs, extreme care shall be taken to ensure that no dirt or foreign matter enters the system.

c. Refer to applicable aircraft maintenance manual for additional servicing and maintenance instructions. Use only specified hydraulic fluid.

3-9. Pneumatic System Servicing. Safety precautions for servicing pneumatic reservoirs are contained in the following paragraphs.

a. Never use pressure oxygen to inflate gear shock struts, pressure accumulators, etc.

b. Use only clearly labeled compressed air cylinders or compressed air hoses of known origin.

c. Ensure that locking mechanism on aircraft valve stem is engaged prior to installing hose to valve stem. Always engage locking mechanism after servicing.

d. Fill system slowly to reduce heat generated by filling too rapidly.

e. Exercise care not to overcharge the system.

f. Completely discharge pressure prior to removing a component from the system.

3-10. Engine Operation. For operation and specific instructions on a particular fixed or rotary wing Army aircraft, refer to the applicable maintenance manual. Safety procedures and general operating procedures for reciprocating and turbine engines are contained in the following paragraphs.

a. *Safety Procedures*. Safety procedures prior to starting, during starting, during engine operation, and after operating engines are covered in the following paragraphs.

(1) *Safety procedures prior to starting*. The following safety procedures should be accomplished prior to starting:

(a) Head aircraft so that exhaust blast is directed to least inhabited areas.

(b) Place approved chocks fore and aft of main landing gear wheels.

(c) Clear aircraft and surrounding areas of covers, tools, rags, work stands etc., and remove mooring ropes.

(d) Secure access doors by closing or removing prior to ground testing turbine-powered aircraft engines.

(e) Do not allow personnel on any external portion of an aircraft during engine start or operation.

(f) Station ground crew member, equipped with a carbon dioxide or equivalent fire extinguisher to one side and forward of engine being started. This crew member will observe for fire and fire hazards, such as fuel from overflow lines, fuel/oil leakage, chock slippage, and other irregular conditions.

CAUTION

If aircraft utility fire extinguisher is utilized for an engine start, another fire extinguisher, rated capacity of 10-B or more, will be located within 50 feet of all fixed or rotary wing Army aircraft. Fire fighting capability must be maintained.

NOTE

If ground crewmember does not have radio communication, he must stand in view of aircraft operator.

(g) When appropriate, station a responsible ground crewmember off to one side, away from danger areas, and aft of operating turbine powered aircraft, to warn approaching traffic. Use a danger flag when necessary.

(2) Safety procedures during starting. The following safety procedures should be accomplished during starting:

(a) Employ hand signals for directing activity when engine operating noise will not permit voice communication.

(b) Avoid excessive fuel pressure when starting turbine engines.

(c) When fire occurs during engine start, or while operating, the operator shall take necessary action, as outlined in applicable maintenance manual, to extinguish flame. Should this action fail, the fire guards shall take immediate action with approved fire extinguishing agent provided. Should fire get beyond control of operator and fire guard, all available approved means of extinguishing an aircraft or engine fire shall be used.

(d) During start, and while engines are operating, personnel shall stand well clear of propellers and of areas affected by turbine air intake flow and exhaust blast.

(e) All personnel will remain clear of engines necessitating close inspections or adjustment, as directed by the specific equipment manual, until operating engine speed (rpm) has been obtained.

(f) Do not use a quick, excessive throttle start on rotary aircraft This kind of start could swing the tail rapidly, with the possibility of injury to personnel or damage to equipment from the tail rotor Keep personnel and equipment clear of aircraft at a distance at least equal to its length

(3) Safety procedures during engine operation. The following safety procedures should be accomplished during engine operation.

(a) Do not operate engines in hangars.

(b) Do not operate aircraft engine where propeller or turbine blast would cause injury to personnel or damage to aircraft and property.

(c) Nonrated personnel cannot run up rotary wing aircraft under any conditions.

(4) Safety procedures after operating engines. The following safety procedures should be accomplished after engine operation:

(a) Place ignition switch in OFF position. It is imperative that the ignition switch of an aircraft engine be in OFF position when engine is not operating. Master battery switch shall be turned off when no longer required.

(b) Turn off all tank selector and emergency fuel system valves.

(c) When practicable, make adjustment to engine and rotors with engine stopped.

b. Turbine Engines . Turbine engine starting, ground checks, and shutdown are covered in the following paragraphs.

(1) Starting Start engines using the following general procedures.

(a) Remove ice or frost from engine cowling and inlet section prior to starting.

(b) Connect an authorized auxiliary power unit.

(c) When specified minimum starting rpm cannot be obtained with available auxiliary power unit, preheat accessory section and oil reservoir to reduce starting loads. Aircraft battery may be used as a boost to obtain required rpm.

NOTE

In normal temperatures, starting attempts below recommended starting rpm increases the possibility of engine damage due to hot starts.

(d) Accomplish engine starts according to procedures outlined in the applicable maintenance manual, using specified jet fuel or required alternate.

(e) When there is no oil pressure after sufficient runup time, or if oil pressure drops below operating range after a few minutes of ground operation, shut down engine and determine cause.

.

NOTE

- **Starting oil pressure may exceed standard oil pressure gauge limits. This condition is not considered dangerous unless the pressure remains high. Takeoff should be delayed until oil pressure drops with range, as specified in applicable maintenance manual.**

- **A hot start occurs when the engine starts, but the exhaust gas temperature exceeds specified limits. This is usually caused by an excessively rich fuel air mixture entering the combustion chamber. The fuel to the engine should be shut off immediately.**

- **False or hung starts occur when the engine starts normally but the rpm remains at some low value rather than increasing to the normal starting rpm. This is often the result of insufficient power to the starter, or the starter cutting off before the engine starts self-accelerating. In this case, the engine should be shut down.**

(2) Ground checks . To ensure proper operation, perform the following procedures before taxiing or takeoff.

(a) Inspect all aircraft systems and surfaces, with emphasis on systems and surfaces directly affected by low temperatures.

(b) Inspect controls and trim tabs for freedom of movement.

CAUTION

Do not apply heat directly or too rapidly against windshield and windows as there is danger of cracking, crazing, and discoloration.

(c) Inspect cabin heat, defrosting, and anti-icing systems.

(d) Inspect hydraulically-operated equipment. Cycle system several times if sluggish operation is evident.

(3) Shutdown. Shut down turbine engines in accordance with the applicable maintenance manual.

3-11. Runup and Taxiing . Nonrated personnel who start, run, warmup test, taxi or otherwise operate aircraft on the ground will be fully qualified, demonstrate satisfactory ability, and be authorized to perform such duties, in accordance with AR 95-1. Nonrated personnel cannot run up rotary wing aircraft under any condition. General safety procedures, taxiing, and postflight and parking are covered in the following paragraphs.

a. Safety Procedures. General safety procedures for runup and taxiing are provided in the following steps.

(1) Chock aircraft securely before attempting an engine runup.

(2) Check runup area carefully to prevent propeller or jet blast from throwing ice and snow on other aircraft.

NOTE

Some instruments will give erroneous readings due to cold. These readings can be compensated for or corrective action may be taken. For specific instruments and their characteristics, consult applicable maintenance manual.

(3) Position ground crew to ensure adequate guidance when aircraft is maneuvered close to other aircraft, buildings, or obstructions, or in gusty or high winds.

(4) Check that brakes are not frozen, and that aircraft will roll before attempting to taxi from parking space.

(5) Free tires that have become frozen to surface by application of heat or over-inflation. Do not allow heat to exceed 160°F (71°C).

NOTE

Immediate freeing action cannot be expected from tires that have been over-inflated. A time period of one-half to one hour may be necessary for tires to become free.

(6) Avoid snow and slush blown by preceding aircraft by increasing distance between aircraft when taxiing.

(7) Reduce taxi speeds to ensure safe stopping.

(8) Exercise care when pulling out or turning from parking line to ensure that other aircraft will not be damaged or covered by snow and ice from propeller blast.

(9) Avoid taxiing into deep snow or snow drifts, as steering could become difficult, brakes could freeze, and damage to propellers could result.

(10) Unless aircraft is equipped with an auxiliary power unit, use only essential electrical equipment to preserve battery life while taxiing at low engine speeds.

b. Taxiing. The following are general procedures for taxiing:

(1) Only personnel authorized to taxi as specified in AR 95-1 may taxi Army aircraft.

(2) Do not taxi aircraft on any taxiway which runs within 100 feet of active runways unless necessitated by terrain or directed to do so by proper authority.

(3) Upon approved signal from flight compartment, approach and remove wheel chocks. Exercise caution and consideration for operating propellers, turbine inlet, and exhaust areas.

(4) Use only sufficient engine power to gain rolling momentum when taxiing aircraft from a row of parked aircraft. When it is necessary to turn aircraft, gain required momentum in straight movement to permit making turn with reduced power.

(5) Under normal operations, wing guides will not be mandatory. However, when an aircraft is maneuvered in proximity of other aircraft, buildings, or obstructions, or in gusty or high wind conditions, there shall be wing guides to ensure adequate guidance.

c. Postflight and Parking. The following procedures are listed to prevent abortive flights following the last flight of the day, and to protect parked aircraft:

(1) Drain oil tank sump and main oil drain before condensation freezes.

(2) Inspect oil and fuel drains and crankcase breathers for ice or frost. Remove any existing frost or ice.

(3) Inspect battery for charge at least once a week. If layovers are to be over 4 hours and temperature is below -20°F (-29ºC), remove battery and store in a warm place.

(4) Drain oil system when there is no provision available for preheating oil and a long layover period is anticipated.

(5) When temperature rises above freezing during a long layover, drain fuel and oil tank sumps of water before temperature drops.

3-12. Test Flights and Maintenance Operational Checks. Maintenance test flights are categorized as general test flights and limited test flights. Specific and mandatory requirements for accomplishment of aircraft test flights and maintenance operational checks are found in Section III, TM 55-1500-328-23.

a. Test Flight Safety Maintenance test flights will be accomplished with assistance as necessary from the most proficient flight crew available; i.e., copilot, technical inspectors, and observers. Aviators who are not graduates of The Aircraft Maintenance Test Flight course may be designated as Maintenance Test Pilots upon successful completion of an evaluation administered in accordance with FM 1-544. Minimum crew possible will be aboard aircraft during test flight.

b. Maintenance Operational Checks. Maintenance operational checks (MCCs) are accomplished on the ground through engine runup, aircraft taxiing or use of auxiliary power or testing equipment, in such a manner as to simulate conditions under which the system is to operate. The purpose of an MOC is to assure that aircraft systems or components which have been disturbed during an inspection or maintenance action have been repaired, reassembled or adjusted satisfactorily.

c. Carbon Monoxide Detection. Determine the carbon monoxide concentration in aircraft after every major overhaul. Follow the procedures and limits in the instructions packed with the carbon monoxide detector.

CHAPTER 4
AIRCRAFT STORAGE AND SHIPMENT

4-1. General. The following paragraphs provide information on the preparation of Army aircraft for shipment and storage.

4-2. Categories of Storage. The length of time that the aircraft will be inactive will determine which of the following categories of storage will be used.

a. *Flyable Storage*. Flyable storage is the prescribed procedure to maintain a stored aircraft in operable condition. Next to daily use, this category of storage keeps the aircraft in the best possible condition. All scheduled preventative maintenance will be performed on aircraft in flyable storage, and periodic operation of the aircraft and all systems is required. There is no time limit on flyable storage.

b. *Short Term Storage*. Short term storage is used to store an aircraft for a period not to exceed 45 days. Aircraft in short term storage require extensive preservation but very little periodic attention.

c. *Intermediate Storage*. Intermediate storage is used to store aircraft for a period of 46 to 180 days. Aircraft in intermediate storage require very extensive preservation but minimal periodic attention.

d. *Long Term Storage*. Procedures for long term storage are not available for the storage of Army aircraft. If storage beyond 180 days is required, the aircraft will be depreserved, returned to flyable status, operated, and represerved in accordance with this chapter.

e. *Preservation of Aircraft Undergoing Maintenance*. Aircraft undergoing AVUM/AVIM maintenance in a hangared environment shall not be considered to be in storage. Tasks applicable to short term storage shall be performed as necessary to prevent deterioration of the aircraft. Selection of the required tasks is at the discretion of the maintenance officer based on local conditions. Aircraft undergoing maintenance in an outside environment and aircraft stored in an outside environment awaiting parts shall be preserved for the appropriate storage category as described above.

4-3. Responsibility. The Commanding Officer shall be responsible for initiating action to place aircraft in storage in accordance with this chapter. The type of storage used shall be selected based on the length of time the aircraft will be inactive.

4-4. Preparation of Aircraft for Storage. When the decision is made to place aircraft in flyable, short term, or intermediate storage, the aircraft will be prepared in accordance with the applicable Aviation Unit Maintenance (AVUM) technical manuals. Authorization to take deviation from published procedures will be obtained, in writing, from Commander, U.S. Army Aviation & Missile Command, ATTN: AMSAM-MMC-MM-DP, Packaging & Stock Readiness Branch, Redstone Arsenal, AL 35898

4-5. Inspection of Stored Aircraft. All aircraft placed in storage shall be carefully inspected at regular intervals of 60 days or less, depending on local conditions. Stored aircraft shall be corrosion-treated if this precaution is found necessary when conducting inspection for corrosion. Particular attention shall be given to those areas where moisture deposits will not evaporate rapidly. Normally, corrosion will not be as prevalent on painted surfaces as on unpainted surfaces. The commanding officer of the storage facilities shall be responsible for establishing a program of periodic inspections of stored aircraft in addition to the prescribed inspections listed below:

a. Ensure proper preservation and ventilation of aircraft and take immediate action to correct all unsatisfactory conditions.

b. Ensure drainage holes on underside of fuselage, wing, center section, and control surfaces remain unobstructed.

c. When canvas covers are used for protection, they shall have drainage holes installed at locations where water would tend to accumulate.

d. During hot weather, spot checks shall be made among each type and model of stored aircraft to determine maximum interior temperatures encountered. This shall be accomplished by hanging a standard thermometer in the interior of aircraft, and recording readings during the hottest parts of day. When temperature exceeds 160°F (71°C), action shall be taken to ventilate aircraft.

e. To aid ventilation on aircraft employing astrodomes, astrodome may be removed and replaced with a covered flue.

f. Forced ventilation may be employed when other methods of ventilation are not adequate to prevent sweating in interior of aircraft and resulting accumulation of condensation and mildew.

g. Exterior locks, ground wires, chocks, mooring ropes, rods, and eyes shall be inspected every 30 days and immediately after aircraft has been subjected to high velocity winds (exceeding 40 mph). Pulled rods or

deteriorated locks, ground wires, chocks, mooring ropes, and rods shall be replaced.

NOTE

Under some conditions, corrosion may attack the metal through the paint. In such cases, the affected areas will be indicated by blisters or a scaly appearance of the paint.

4-6. Maintenance of Stored Aircraft. Precautions shall be taken to ensure that adequate maintenance will be accomplished to maintain the aircraft in the proper state of preservation in accordance with applicable aircraft maintenance manual. For aircraft in flyable storage, calender and dual criteria inspections will be completed as they become due.

4-7. Entries in Aircraft Forms. When an aircraft is placed in storage, process DA Form 2408 series forms in accordance with DA PAM 738-751. Include an entry indicating the type of storage, the date placed in storage, and the date represervation is due.

4-8. Removal of Aircraft from Storage. When an aircraft is removed from storage, the inspection and maintenance performed will be dependent on the type of storage the aircraft has been in.

a. *Depreservation*. Depreserve aircraft in accordance with applicable AVUM technical manuals.

b. *Inspection*. Perform preventative maintenance daily inspection and all calendar and dual criteria inspections that are due.

c. *Maintenance*. Correct aircraft deficiencies as required.

d. *Operational Check*. Perform Maintenance Operational Check (MOC) and/or Maintenance Test Flight (MTF) as required in accordance with TM 1-1500-328-23.

4-9. Shipment of Aircraft. Step by step procedures for the preparation, loading, tiedown, and unloading of Army aircraft for shipment by vessel, truck, and cargo aircraft are provided in the Preparation for Shipment Manual applicable to the aircraft. Authority to take deviation from the procedures in the applicable Preparation for Shipment Manual must be obtained, in writing, from Commander, U.S. Army Aviation & Missile Command, ATTN: AMSAM-MMC-MM-DP, Packaging & Stock Readiness Branch, Redstone Arsenal, AL 35898

4-10. Preservation and Packaging of Aircraft Components. General information on the preservation and packaging of Army materiel is provided by TM 746-10, Marking, Packaging and Shipment of Supplies and Equipment: General Packaging Instructions for Field Units. Detailed information is provided by TM 38-230-1 and TM 38-230-2, Preservation of Materiel Preservation, Volumes I and II, respectively.

a. *Special Reusable Containers*. Preservation and packaging instructions for major aircraft components that have special reusable containers are contained in the applicable Aviation Unit Maintenance (AVUM) Technical Manual.

b. *Packaging Procedures*. Aircraft components will normally be shipped in the same packaging the replacement component was received in. When this is not possible and assistance is required in determining the preservation and packaging of a specific component, contact Commander, U.S. Army Aviation & Missile Command, ATTN: AMSAM-MMC-MM-DP, Packaging & Stock Readiness Branch, Redstone Arsenal, AL 35898.

CHAPTER 5

MARKING OF AERONAUTICAL ITEMS

5-1. General. The marking system specified in the following paragraphs provides the means for accurately identifying and indicating the condition of aeronautical items.

5-2. Marking Requirements. A single materiel condition tag shall be used to identify each aeronautical component, assembly, kit, or set which is assigned a Federal Stock Number and is stocked, stored, and issued as a single line item of supply. However, individual parts of components, assemblies, kits, or sets which are identified and listed as single line items of supply shall be individually tagged when physically separated from the component, assembly, kit, or set.

5-3. Materiel Marking. The following are the only materiel condition tags and labels authorized for use on Army aeronautical items. These tags and labels are in addition to applicable maintenance forms, records, or tags required by DA PAM 738-751.

- Serviceable Tag-Materiel (DD Form 1574) and Serviceable Label Materiel (DD Form 1584-1).
- Unserviceable (Repairable) Tag-Materiel (DD Form 1577-2) and Unserviceable (Reparable) Label-Materiel (DD Form 1577-3).
- Unserviceable (Condemned) Tag-Materiel (DD Form 1577) and Unserviceable (Condemned) Label-Materiel (DD Form 1577-1).
- Suspended Tag-Materiel (DD Form 1575) and Suspended Label-Materiel (DD Form 1575-1).
- Test/Modification Tag-Materiel (DD Form 1576) and Test/Modification Label Materiel (DD Form 1576-1).

5-4. Method of Accomplishing Entries. When initiating materiel condition tags or labels, entries will be made in the appropriate blocks as prescribed by DA PAM 738-751.

CHAPTER 6
APPLICATION AND REMOVAL OF DECALS

6-1. GENERAL. Decals are suitable for exterior and interior surface application as governed by MIL-D-8634 and MIL-D-8635 respectively. Prior to application of decals, the following instructions shall apply to assure proper adhesion:

WARNING

Aliphatic Naphtha, TT-N-95, is extremely .ammable and toxic to eyes, skin, and respiratory tract. Wear protective gloves and goggles/face shield. Avoid repeated or prolonged contact. Use only in well-ventilated areas (or use approved respirator as determined by local safety/industrial hygiene personnel). Keep away from open .ames, sparks, or other sources of ignition.

a. Clean all surfaces thoroughly with a clean cloth dampened with aliphatic naphtha, Federal Speci.cation TT-N-95, to remove grease, oil, wax, or other foreign matter.

b. Wipe area with a clean, dry cloth to remove dampness and residue, then seal porous surfaces and sand rough surfaces.

c. Remove excess paper and .lm from decals which have trim lines.

6-2. DECAL TYPES. Decals approved for use on Army aircraft are of three types: paper (lacquer), vinyl .lm and metal. Application and removal of decals are explained in the following paragraphs.

a. Paper Decals. Application and removal procedures are explained in the following paragraphs.

(1) Application. Apply paper decals in accordance with the following procedures:

(a) Immerse paper decals in clean water for one to three minutes.

NOTE

Allowing decals to soak longer than three minutes will cause the backing to separate from the decal while immersed; allowing decals to soak less than one minute will result in the backing not separating from decal.

(b) Place one edge of decal on prepared receiving surface and press lightly, then slide paper backing from beneath decal.

NOTE

Apply pressure lightly to permit easy removal of backing; reimmerse decals from which backing is not easily removed.

(c) Perform minor alignment with fingers, then remove water by gently blotting decal and adjacent area with a soft, absorbent cloth. Remove air or water bubbles trapped under decal by wiping carefully toward nearest edge of decal with cloth. Allow decal to dry.

(d) Paint area surrounding decal and outer perimeter of decal with a coat of oil-type varnish, TT-V-109. Apply varnish in a ¼- to ½-inch wide stripe to prevent peeling.

(2) Removal. Remove paper decals by rubbing decal with a cloth dampened with Aliphatic Naphtha, TT-N-95.

b. Vinyl Film Decals. Application and removal procedures are explained in the following paragraphs.

(1) Application. Apply vinyl film decals in accordance with the following procedures:

(a) Separate paper backing from plastic film.

NOTE

Remove paper backing adhering to the adhesive by rubbing the area gently with a clean cloth saturated with water; remove small piece of remaining paper with masking tape.

(b) Place vinyl film, adhesive side up, on a clean porous surface such as wood or blotter paper.

WARNING

Acetone is extremely flammable and toxic to eyes, skin and respiratory tract. Wear protective gloves and goggle/face shield. Avoid repeated or prolonged contact. Use only in well ventilated areas (or use approved respirator as determined by local safety/industrial hygiene personnel). Keep away from open flames, sparks, hot surfaces or other sources of ignition.

(c) Apply acetone, in firm, even strokes, to adhesive side of decal.

NOTE

Reactivate adhesives which have dried with actetone, or equivalent, prior to installation. Adhesive may be reactivated as many as three times without damage to adhesive capability. Adhesives which are reactivated will be allowed to air-dry thoroughly before application.

(d) Position decal in proper location, while adhesive is still tacky, with only one edge contacting prepared surface.

(e) Work roller across decal with overlapping strokes until all air bubbles are removed.

WARNING

Degreasing Solvent, MIL-PRF-680, is combustible and toxic to eyes, skin, and respiratory tract. Wear protective gloves and goggles/face shield. Avoid repeated or prolonged contact. Use only in well-ventilated areas (or use approved respirator as determined by local safety/industrial hygiene personnel). Keep away from open flames or other sources of ignition.

WARNING

Aliphatic Naphtha, TT-N-95, is extremely flammable and toxic to eyes, skin, and respiratory tract. Wear protective gloves and goggles/face shield. Avoid repeated or prolonged contact. Use only in well-ventilated areas (or use approved respirator as determined by local safety/industrial hygiene personnel). Keep away from open flames, sparks, or other sources of ignition.

(2) Removal. Remove vinyl film decals by placing, a cloth saturated with Aliphatic Naphtha, TT-N-95, on decal and scraping film with a micarta scraper. Remove remaining adhesive by wiping with a cloth dampened with degreasing solvent, MIL-PRF- 680.

c. Metal Decals. Metal decals come in three types: cellophane-backing adhesive type, paperbacking adhesive type, and no adhesive type. Application and removal procedures for each type are explained in the following paragraphs.

(1) Cellophane-backing adhesive type. Application and removal of cellophane-backing adhesives are explained in the following paragraphs.

(a) Application. Apply metal decals with cellophane-backing adhesive in accordance with the following procedures:

1 Immerse decal in clean, warm water for one to three minutes.

2 Remove from water and dry carefully with a clean cloth.

3 Remove cellophane backing, but do not touch adhesive,

NOTE

Apply a few drops of Aliphatic Naphtha, Federal Specification TT-N-95, to the adhesive when room temperature is below 72°F (22°C).

4 Position one edge of decal onto prepared receiving surface. On large foil sheet, place center onto receiving surface and work outward from center to edges.

5 Remove all air pockets by rolling firmly with a rubber roller, and press all edges tightly against receiving surface to ensure good adhesion.

(b) Removal. Remove metal decals by moistening edge of foil with aliphatic naphtha, Federal Specification TT-N-95, and peeling decal from adhering surface.

(2) Paper-backing adhesive type. Application and removal of paper-backing adhesive are explained in the following paragraphs.

(a) Application. Apply metal decals with paper backing adhesive in accordance with the following procedures:

1 Remove paper backing from decal.

2 Apply very light coat of acetone, or equivalent, to adhesive.

3 Position decal in proper location while adhesive is still tacky with only one edge contacting prepared surface.

4 Work roller across decal with overlapping strokes until all air bubbles are removed.

(b) Removal. Remove metal decals by moistening edge of foil with Aliphatic Naphtha, Federal Specification TT-N-95, and peeling decal from adhering surface.

(3) No adhesive type. Application and removal of no adhesive are explained in the following paragraphs.

(a) Application. Apply decals with no adhesive in accordance with the following procedures:

1 Apply one coat of cement, Federal Specification MMM-A-1617, to decal and prepared receiving surface.

2 Allow cement to dry until both surfaces are tacky.

3 Apply decal and roll down to remove air pockets.

WARNING

Aliphatic Naphtha, TT-N-95, is extremely flammable and toxic to eyes, skin, and respiratory tract. Wear protective gloves and goggles/face shield. Avoid repeated or prolonged contact. Use only in well-ventilated areas (or use approved respirator as determined by local safety/industrial hygiene personnel). Keep away from open flames, sparks, or other sources of ignition.

4 Remove excess adhesive with a cloth dampened with aliphatic naphtha, Federal Specification TT-N-95.

(b) Removal. Remove metal decals by moistening edge of foil with aliphatic naphtha, Federal Specification TT-N-95, and peeling decal from adhering surface.

6-3. APPLICATION AND INSTALLATION OF IDENTIFICATION TAPES. The Army uses two types of identification systems to code the plumbing lines and electrical conduits of aircraft. The two systems used are the printed-symbolized tape system (the preferred method), and the solid color band, (the alternate method). Identification tapes will be applied to plumbing lines and electrical conduits of all Army aircraft.

a. Printed-Symbolized System. This latest and preferred system utilizes printed colored tape (one inch wide) with geometrical symbols. The main function of the line is printed on the tape. Printing will be in accordance with MIL-STD-1247. Colors will be in accordance with ANA Bulletin 166 and FED-STD-595 (refer to table 6-1).

(1) Colored tapes. Colored tapes as shown in figure 6-1 shall be used to identify aircraft system lines.

(2) Line content. Identification of system line content or subsidiary functions may be indicated by additional words or abbreviations printed on a second tape adjacent to first tape or, alternatively, interposed between words descriptive of main function.

(3) Systems not referenced. A white tape with black lettering will be used for coding lines of systems such as the vacuum system not referenced in figure 6-1.

Table 6-1. Colors and Codes

Color	Specification	Code No.
Light blue	ANA Bulletin 166	501
Light green	ANA Bulletin 166	503
Light yellow	ANA Bulletin 166	505
International orange	ANA Bulletin 166	508
Insignia red	ANA Bulletin 166	509
Maroon	ANA Bulletin 166	510
Insignia white	ANA Bulletin 166	511
Aircraft gray	ANA Bulletin 166	512
Gloss black	ANA Bulletin 166	515
Brown	Federal Standard 595	10049

(4) Type of tape. Aircraft tubing identification marker tape (non-corrosive, heat, cold and solvent resistant), MIL-T-9906 conforming to MS87033, shall be used.

b. Solid Color Band System. This alternate system consists of the use of one, two, or three bands of ½-inch wide solid colored tape wrapped on various lines for identification. This system is shown in figure 6-2.

(1) Tape colors. Colors for tapes used in this system shall conform to color codes in ANA Bulletin 166 and FED-STD-595 (refer to table 6-1).

(2) Tape spacing. When more than one color of tape is required, tapes shall be placed approximately 1/16 inch apart. When one color is used but more than one tape is required, tapes shall be placed approximately 1/8 inch apart.

(3) Type of tape. Type II pressure-sensitive tape, A-A-113, shall be used for this system.

c. Application of Identification Tapes. The application and use of both identification systems are the same, and the following paragraphs are applicable to both systems.

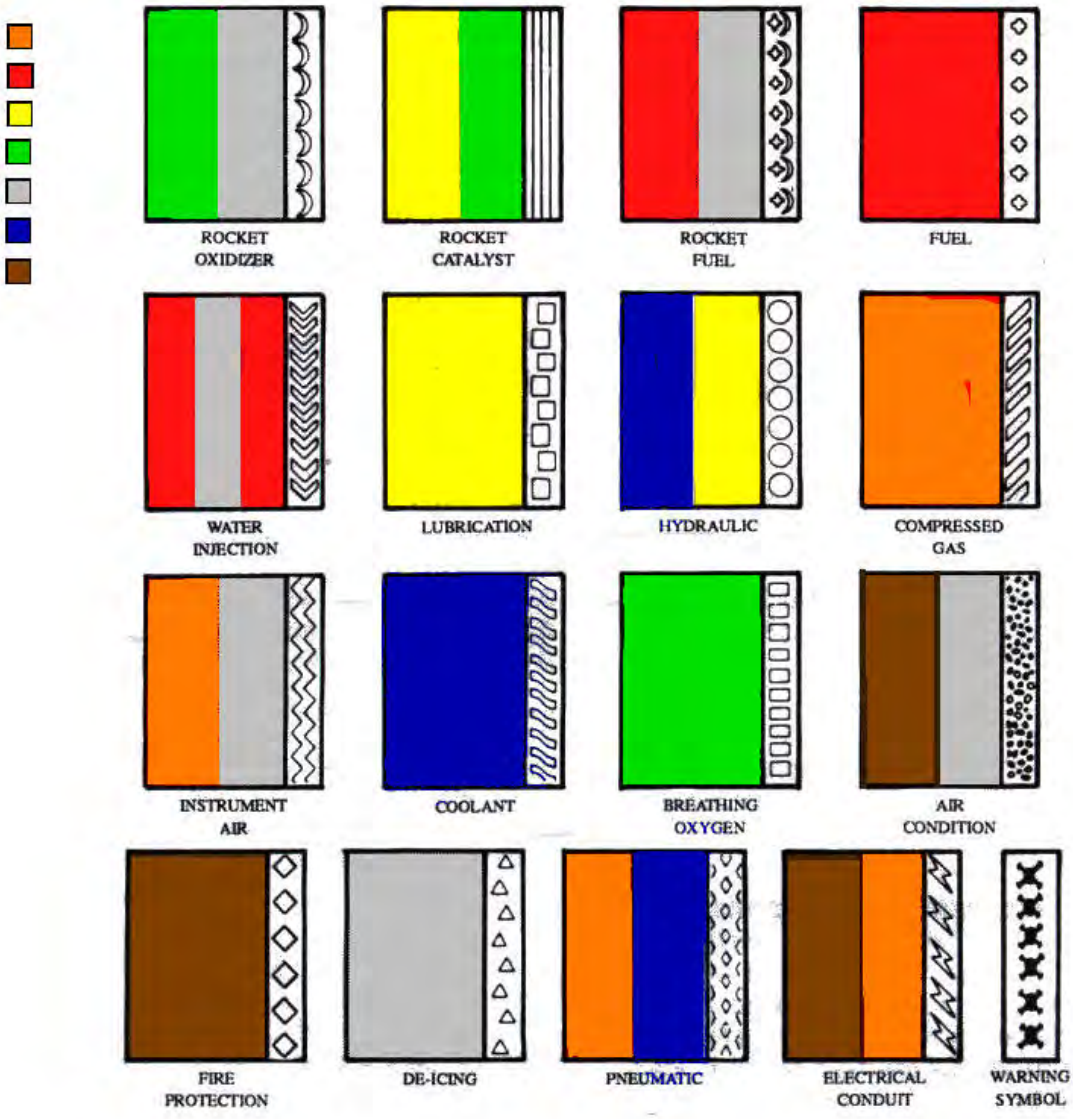

THE ABOVE COLOR CODES REPRESENT DESIGNATION FOR SYSTEMS ONLY FOR CODING LINES WHICH DO NOT FALL INTO ONE OF THESE SYSTEMS,THE CONTENTS SHALL BE DESIGNATED BY BLACK LETTERING ON A WHITE TAPE.

SUBSIDIARY FUNCTIONS OR IDENTIFICATION OF LINE CONTENT MAY BE INDICATED BY THE USE OF ADDITIONAL WORDS OR ABBREVIATIONS WHICH SHALL BE CARRIED ON A SECOND TAPE ADJACENT TO THE FIRST OR ALTERNATIVELY INTERPOSED BETWEEN THE WORDS DESCRIPTIVE OF THE MAIN FUNCTION.

WARNING SYMBOL TAPES. 3/8 INCH WIDE. SHALL BE APPLIED TO THOSE LINES WITH CONTENTS CONSIDERED TO BE DANGEROUS TO MAINTENANCE PERSONNEL WARNING TAPES ARE TO BE PLACED ADJACENT TO SYSTEM IDENTIFICATION TAPES ONE BAND SHALL BE LOCATED ON EACH TUBE SEGMENT, 24 INCHES OR SHORTER.

ONE BAND SHALL BE LOCATED AT EACH END OF EACH TUBE SEGMENT LONGER THAN 24 INCHES ADDITIONAL BANDS SHALL BE APPLIED WHEN THE TUBE SEGMENT PASSES THROUGH MORE THAN ONE COMPARTMENT OR BULKHEAD AT LEAST ONE BAND SHALL BE VISIBLE IN EACH COMPARTMENT OR ON EACH SIDE OF THE BULKHEAD.

PRESSURE TRANSMITTER LINES SHALL BE IDENTIFIED BY THE SAME COLORS AS THE LINES FROM WHICH THE PRESSURE IS BEING TRANSMITTED.

FILLER LINES, VENT LINES,AND DRAIN LINES OF A SYSTEM SHALL BE IDENTIFIED BY THE SAME COLORS AS THE RELATED SYSTEM.

TAPES SHALL NOT BE USED ON FLUID LINES IN THE ENGINE COMPARTMENT WHERE THERE IS A POSSIBILITY OF THE TAPE BEING DRAWN INTO THE ENGINE INTAKE FOR SUCH LOCATIONS, SUITABLE PAINTS, CONFORMING TO THIS COLOR CODE AHD WHICH HAVE NO DELETERIOUS EFFECT ON THE MATERIAL USED FOR THE LINES, SHALL BE USED FOR IDENTIFICATION PURPOSES IN THESE CASES, THE GEOMETRICAL SYMBOLS WAY BE OMITTED

AV 001903

Figure 6-1. Color-Coded Tapes

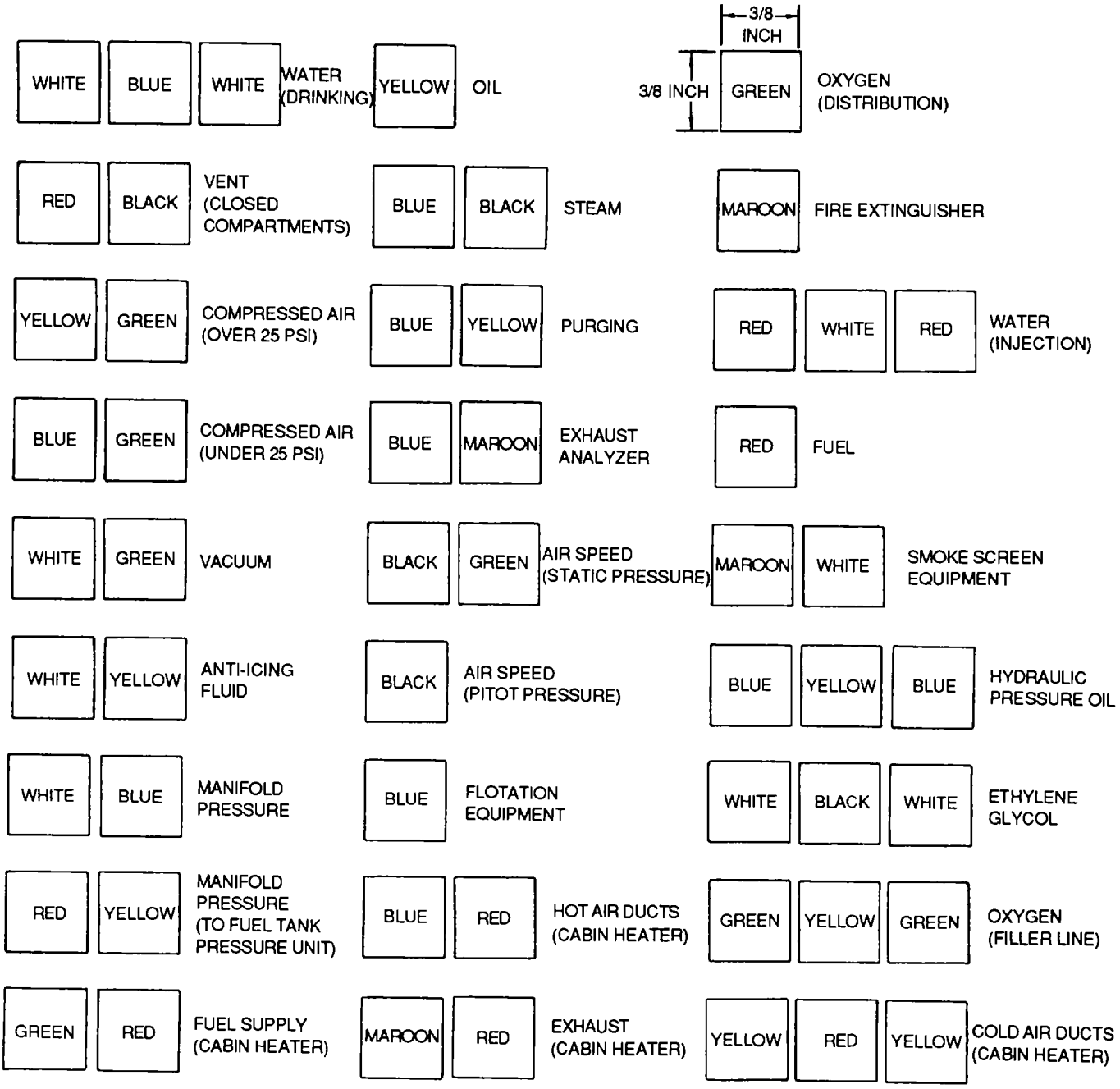

PIPE LINE SYSTEMS COLOR CODE

Figure 6-2. Solid Color Band System

(1) Secondary lines. Filler, vent, and drain lines will be identified by colors of the plumbing system for which they function.

(2) Location of bands. One band will be located on each tube segment of 24 inches or less when both ends of the segment are within the same compartment. One band shall be located at each end of tube segments longer than 24 inches. When the tube segment passes through more than one compartment or bulkhead, additional bands will be applied to the tube so that a minimum of one band is visible in each compartment or on each side of the bulkhead.

(3) Tapes in engine compartment. Tapes shall not be used on fluid lines in the engine compartment where there is a possibility of the tape being drawn into the engine intake. When tape cannot be employed, suitable paints conforming to the color codes in table 6-1, and having no injurious effect on the metal used for the lines, shall be used for identification purposes. When paints are used, the geometrical symbols may be omitted.

(4) Warning symbol. Warning symbol tapes, as shown in figure , shall be applied adjacent to the identification tape on those lines containing fluids considered to be dangerous to maintenance personnel. Warning tapes shall be used when applicable on both identifying systems. Warning tape shall be 3/8 inch wide.

d. Installation of Identification Tapes. Installation of identification tape consists of the following procedures:

WARNING

Aliphatic Naphtha, TT-N-95, is extremely flammable and toxic to eyes, skin, and respiratory tract. Wear protective gloves and goggles/face shield. Avoid repeated or prolonged contact. Use only in well ventilated areas (or use approved respirator as determined by local safety/industrial hygiene personnel). Keep away from open flames, sparks, or other sources of ignition.

CAUTION

The low flash point of solvents make them a fire hazard, therefore, employ utmost care when using them. Damage may otherwise result.

(1) Clean areas to be banded with Aliphatic Naphtha, Federal Specification TT-N-95.

(2) Coat exterior surfaces of metal tubing when necessary, with epoxy primer, MIL-PRF-23377, prior to application of tape.

(3) Install tape not having clear acetate covering by tightly wrapping 1 ¼ turns of tape around the part being banded and press firmly to ensure adhesion. Apply one coat of clear lacquer, Federal Specification TT-L-32, over band and extend ¼ inch beyond tape edges.

(4) Install tape having clear acetate covering by tightly wrapping 1 ¼ turns of tape around the part being marked and press firmly to ensure adhesion.

CHAPTER 7

GENERAL RECIPROCATING ENGINE MAINTENANCE

7-1. General The maintenance instructions and procedures contained in this chapter are general and applicable to reciprocating engines used on Army aircraft. Maintenance instructions that are specific and peculiar to particular engines are contained in the applicable maintenance manuals and will be used in conjunction with general information contained in this chapter.

7-2. Engine Types and Designations. Reciprocating engine types and designations are explained in the following paragraphs.

a. *Types.* Types of aircraft reciprocating engines used by the Department of the Army are the radial type and the opposed type Radial-type engines have the crankcase in the form of a circle, as shown in figure 7-1. The cylinders extend out from the housing in the same manner as the spokes of a wheel Cylinders are arranged evenly in the same circular plane and all pistons are connected to a 360-degree crankshaft. Opposed-type engines have cylinder banks arranged an two rows directly opposite each other with a crankshaft in the center as shown in figure 7-2. Pistons are connected to the single crankshaft. This type engine may be mounted with cylinders vertical or horizontal.

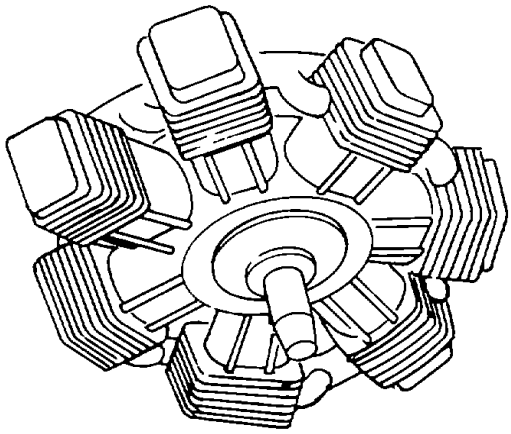

Figure 7-1. Radial-Type Engine

b. *Designation Examples*. An example of radial engine designation is R-1820-103. The R denotes a radial arrangement of the cylinders, 1820 denotes a total of 1820 cubic inches displacement, and 103 denotes a particular modification or characteristic of the engine. For opposed engine designations, such as IGSO-480-A1A6, the I denotes injected, G denotes geared output drive, S denotes supercharged, the O denotes opposed arrangement of the cylinders, 480 denotes a total or 480 cubic inches displacement, and the A1A6 denotes a particular modification of characteristic of the engine.

7-3. Reciprocating Engine Theory. A reciprocating (internal-combustion) engine is a device for converting heat energy into mechanical energy. Gasoline is vaporized and mixed with air, forced or drawn into a cylinder, compressed by a piston, and then ignited by an electric spark. The conversion of the resultant heat energy into mechanical energy and then into work is accomplished in the cylinder. The operating cycle of an internal combustion reciprocating engine, as shown in figure 7-3, includes the series of events required to induct, compress, ignite, burn, and expand the fuel-air charge in the cylinder, and to scavenge or exhaust the byproducts of the combustion process. When the compressed mixture is ignited, the resultant gases of combustion expand very rapidly and force the piston to move away from the cylinder head. This downward motion of the piston, acting on the crankshaft through the connecting rod, is converted to a circular or rotary motion by the crankshaft.

7-4. Major Engine Components. Major engine component types and maintenance are described in the following paragraphs.

a. Crankcases. The crankcase encloses the various mechanisms surrounding the crankshaft. The crankcase provides a tight enclosure for the lubricating oil and supports various external and internal mechanisms it contains the bearings in which the crankshaft revolves and provides support for attachment of cylinder assemblies. Finally, it provides mountings for attachment to the aircraft, and by reason of its strength and rigidity, it prevents misalignment of the crankshaft and its bearings. The following paragraphs describe crankcase types and general maintenance.

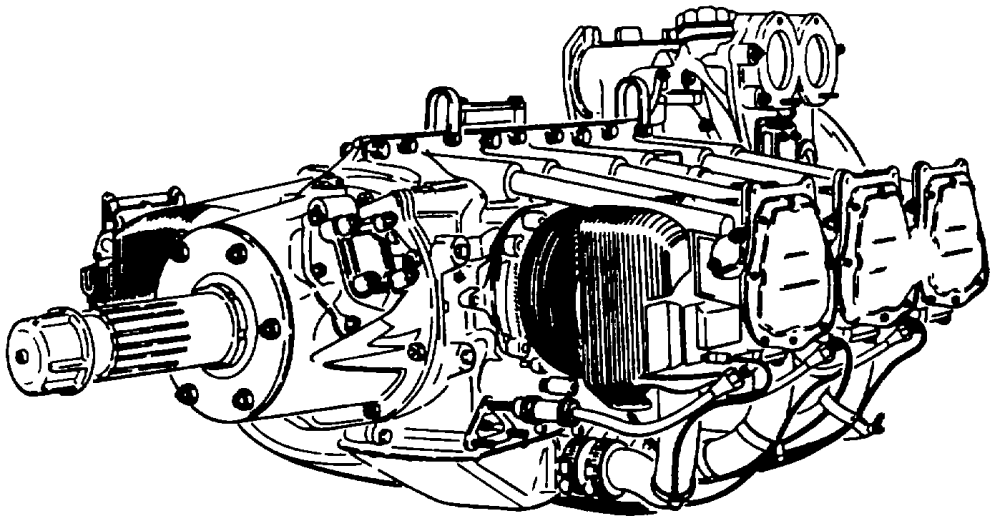

Figure 7-2. Opposed-Type Engine

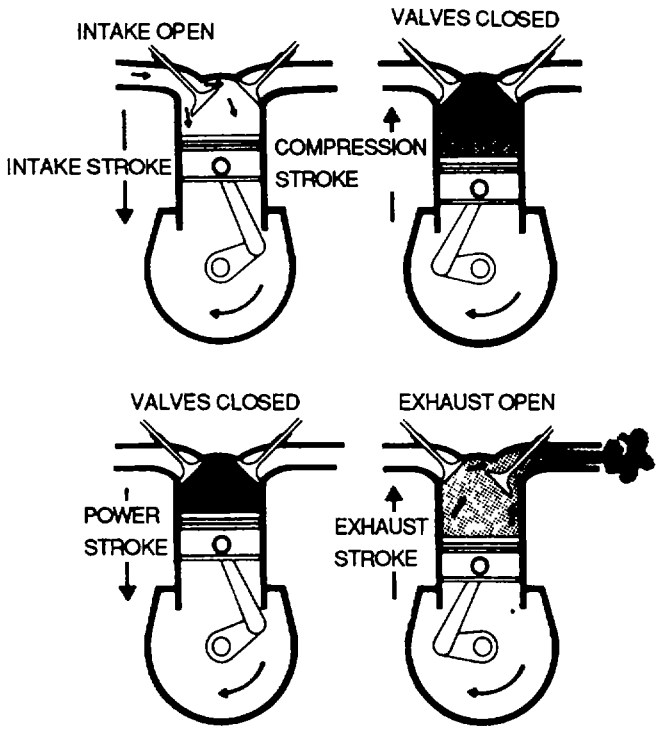

Figure 7-3. Reciprocating Engine Operating Cycle (Four-Stroke)

(1) Types. Opposed-type and radial-type engine crankcases are described in the following paragraphs.

(a) Opposed-type crankcases. The crankcases used on engines opposed vary in form but in general they are approximately cylindrical. One or more sides are surfaced to serve as a base to which the cylinders are attached by means of capscrews, bolts, or studs. The crankshaft is carried in a position parallel to the longitudinal axis of the crankcase and is generally supported by a main bearing between each throw. See figure 7-4.

(b) Radial-type crankcases. Radial-type engine crankcases, as shown in figure 7-5, vary in size and number of sections. Four common sections are described by the following paragraphs.

1 Nose section . The nose section is usually made of an aluminum alloy and is fastened to the power section by studs and nuts or caps and screws. Most nose sections support the propeller thrust bearing, propeller governor drive shaft, and the propeller reduction gear assembly. Various other engine accessories are sometimes attached.

2 Power section. The power or main section may be of one-piece or two-piece construction and usually consists of one, two, or possibly three pieces of high-strength heat-treated aluminum-alloy or steel forging, bolted together if there is more than one piece. The cam-operating mechanism is usually housed and supported by the power section. At the center of each main crankcase web section are crankshaft bearing supports. Cylinder mounting pads are located radially around the outside circumference of the power section. The cylinders are fastened to the pads by means of studs and nuts or cap screws. Oil seals are located between the nose section and the power section. Similar seals are installed between the power section and the supercharger section.

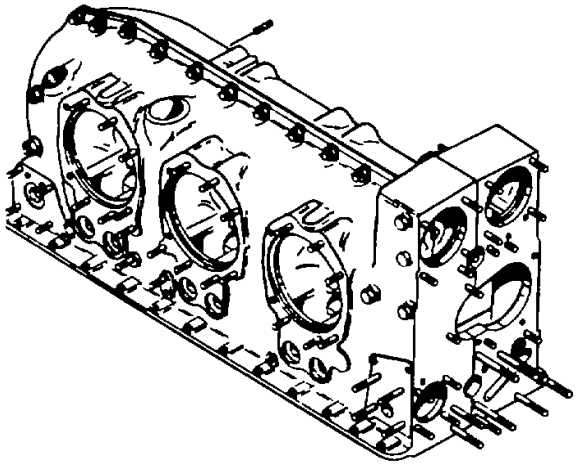

Figure 7-4. Opposed-Type Crankcase

3 Supercharger section The supercharger section is normally located immediately behind the main power section and may be of either one-piece or two-piece construction. Its principal function is to house the blower or supercharger impeller and diffuser vanes There are openings on the outside circumference of the housing for attaching the individual induction pipes, a small opening for the attachment of the manifold pressure line, and internal-passages which lead to the supercharger drain valve.

4 Accessory section The accessory section provides mounting pads for the accessory units such as the fuel pumps, vacuum pumps, lubricating-oil pumps, tachometer generators, generators, magnetos, starters, two-speed supercharger control valves,

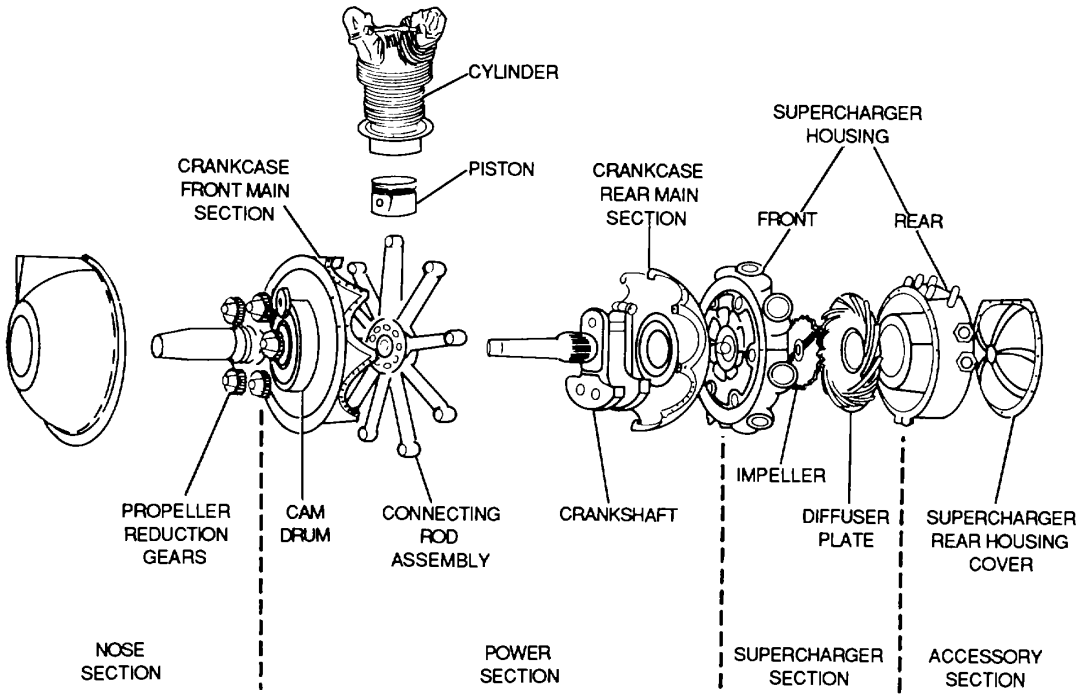

Figure 7-5. Radial-Type Crankcase

oll-flltering screens, Cuno filters, and other items of accessory equipment. In some aircraft powerplants, the cover for the supercharger rear housing is made of an aluminum-alloy or a magnesium-alloy casting in the form of a heavily ribbed plate that provides the mounting pads for the accessory units; but in other powerplants, the housings for the accessory units may be mounted directly on the rear of the crankcase. Regardless of the construction and location of the accessory housing, it contains the gears for driving the accessories which are operated by engine power.

(2) Maintenance. Crankcase maintenance consists of inspection for cracks, warping, damage to machined surfaces, warn bushings and bearing bores, loose or bent studs, corrosion damage, and other conditions which may lead to failure in service Refer to the applicable maintenance manual.

NOTE

Two-piece crankcases are manufactured with matched parts; therefore it one half must be discarded, the entire crankcase is replaced.

b. Crankshafts. The crankshaft transforms the reciprocating motion of the piston and connecting rod into rotary motion for turning the propeller It Is a shaft composed of one or more cranks or throws The parts are the main journal, crankpln, crank cheek or crank arm, and the counterweights and dampers The following paragraphs describe crankshaft types and general maintenance.

(1) Types. Opposed-type and radial-type engine crankshafts are described in the following paragraphs.

(a) Opposed-type crankshaft. A typical six cylinder opposed-type crankshaft is shown in figure 7-6. This crankshaft is a one-piece, six-throw, 60-degree crankshaft machined from an alloy-steel (SAE 4340) forging. The crankpins and main bearing journals are ground to close limits of size and surface roughness.

(b) Radial-type crankshaft. Figure 7-7 shows a single-throw 360-degree crankshaft used on single-row radial engines. It may be of single-piece or two-piece construction with two main bearings (one on each end) This single piece crankshaft must be used with a master rod having the large end split.

(2) Maintenance. Crankshaft maintenance is critical to safe engine operation. The dimensions of the journals, the balance, and the alignment of the shaft must be within tolerances when inspected and measured. The crankshaft should be inspected by the magnetic methods to detect flaws and defects. Refer to the applicable maintenance manual for specific maintenance procedures and tests.

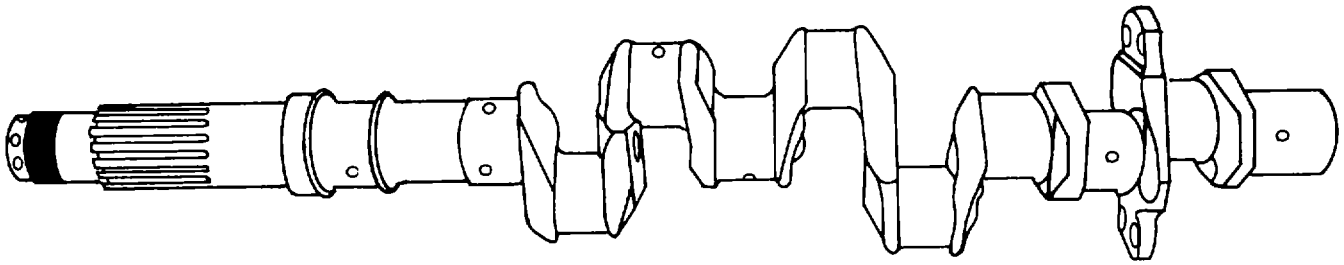

Figure 7-6. Opposed-Type Crankshaft (Six-Cylinder) (Six-Throw)

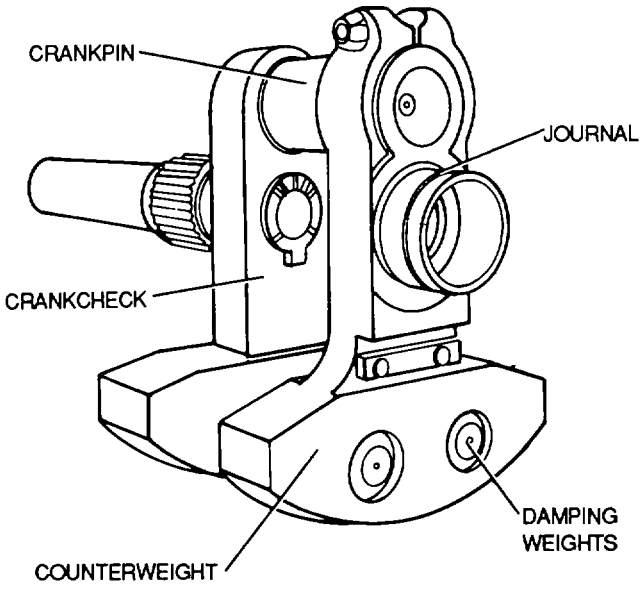

Figure 7-7. Radial-Type Crankshaft (Single-Throw)

c. *Bearings*. A beanng is any surface which supports, or is supported by, another surface. A good bearing must be composed of a metal that is strong enough to withstand the pressure imposed on it and should permit the other surface to move with a minimum of friction and wear. The parts must be held in position within very close tolerances to provide efficient and quiet operation, and yet allow freedom of motion. To accomplish this, and at the same time reduce friction of moving parts so that power loss is not excessive, lubricated bearings of many types are used.

(1) Types. The three different types of bearings in general use are plain, roller and ball They are shown in figure 7-8 and described in the following paragraphs.

(a) Plain bearings . Plain bearings are usually made of nonferrous metals, such as silver, bronze, aluminum, and various alloys of copper, tin, or lead. Plain bearings are generally used for the crankshaft, cam ring, camshaft, connecting rods, and the accessory drive shaft bearings.

(b) Ball bearings. A ball beanng assembly consists of grooved Inner and outer races, one or more sets of balls, and in bearings designed for disassembly, a bearing retainer They are used for supercharger Impeller shaft beanngs and rocker arm bearings in some engines. Special deep-groove ball bearings are used in

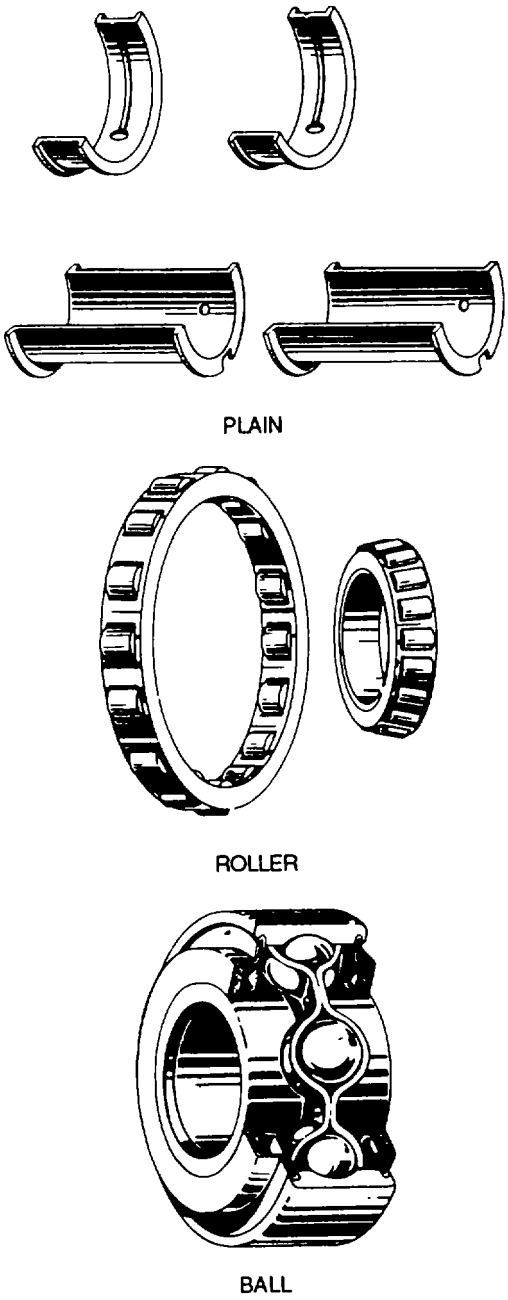

Figure 7-8. Bearing Types

aircraft engines to transmit propeller thrust to the engine nose section.

(c) Roller bearings Roller bearings are made In many types and shapes, but the two types generally used in the aircraft engine are the straight roller and the tapered roller beanngs. Tapered roller bearings are always used In pairs Straight roller

bearings are used where the bearing is subjected to radial loads only In tapered roller bearings, the inner and outer-race bearing surfaces are cone shaped. Such bearings will withstand both radial and thrust loads. Straight roller bearings are used in high-power aircraft engines for the crankshaft main bearings. They are also used in other applications where radial loads are high.

(2) Maintenance Clean, inspect, and replace beanngs. in accordance with the applicable maintenance manual

d. Connecting Rods. The connecting rod is the link which transmits forces between the piston and the crankshaft. Connecting rods must be strong enough to remain rigid under load and yet be light enough to reduce the inertia forces which are produced when the rod and piston stop, change direction, and start again at the end of each stroke.

(1) Types There are three types of connecting rod assemblies, as shown in figure 7-9. The plain, fork-and-blade, and master-and-articulated connecting rod assemblies are described in the following paragraphs.

(a) Plain connecting rods . Plain connecting rods are used In opposed engines. The end of the rod attached to the crankpin Is fitted with a cap and a two-piece beanng. The beanng cap is held on the end of the rod by bolts or studs. To maintain proper fit and balance, connecting rods should always be replaced. In the same cylinder and In the same relative position.

(b) Fork-and-blade connecting rods The fork-and-blade rod assembly Is used primarily in V-type engines The forked rod is split at the crankpln end to allow space for the blade rod to fit between the prongs. A single two-piece bearing is used on the crankshaft end of the rod.

(c) Master-and-articulated connecting rods. The master-and-articulated rod assembly is only used in radial engines. In a radial engine the piston in one cylinder in each row is connected to the crankshaft by a master rod. All other pistons. In the row are connected to the master rod by an articulated rod.

(2) Maintenance. The maintenance of connecting rods involves visual Inspection for nicks, cracks, bending, corrosion, and other damage, magnetic particle inspection, checking alignment for parallelism and convergence between the bearing end and the piston end; rebushing, and replacement of the bearings. Refer to the applicable maintenance manual before accomplishing any maintenance procedures.

e. Pistons. Pins. and Rings. Pistons, pins, and rings, as shown in figure 7-10, are described and maintained as explained In the following paragraphs.

(1) Pistons. The piston of a reciprocating engine is a cylindrical member which moves back and forth within a steel cylinder. The piston acts as a moving wall within the combustion chamber. As a piston moves down the cylinder, it draws In the fuel-air mixture. As it moves upward, it compresses the charge, ignition occurs, and the expanding gases force the piston downward. This force is transmitted to the crankshaft through the connecting rod. On the return upward stroke, the piston forces the exhaust gases from the cylinder.

(2) Pins. The piston pin joins the piston to the connecting rod It Is machined in the form of a tube from a nickel steel alloy forging, casehardened and ground. The piston pin is sometimes called a wristpin because of the similarity between the relative motions of the piston and the articulated rod and that of the human arm.

(3) Rings. The piston rings prevent leakage of gas pressure from the combustion chamber and reduce to a minimum the seepage of oil into the combustion chamber. The rings fit into the piston grooves but spring out to press against the cylinder walls, when properly lubricated, the rings form an effective gas seal. Rings are always used in sets.

(4) Maintenance. Pistons and pins are Inspected and checked for cleanliness, wear, scoring, corrosion, cracks, and any apparent damage New rings are. Installed each time the engine is overhauled. Refer to the applicable maintenance manual when accomplishing maintenance on pistons, pins, and rings.

f. Cylinders. The portion of the engine in which the power is developed is called the cylinder. The cylinder provides a combustion chamber where the burning and expansion of gases take place, and. It houses the piston and the connecting rod.

(1) Description. The cylinder used In the aircooled engine is the overhead valve type shown in figure 7-11. Each cylinder assembly consists of the cylinder head and the cylinder barrel.

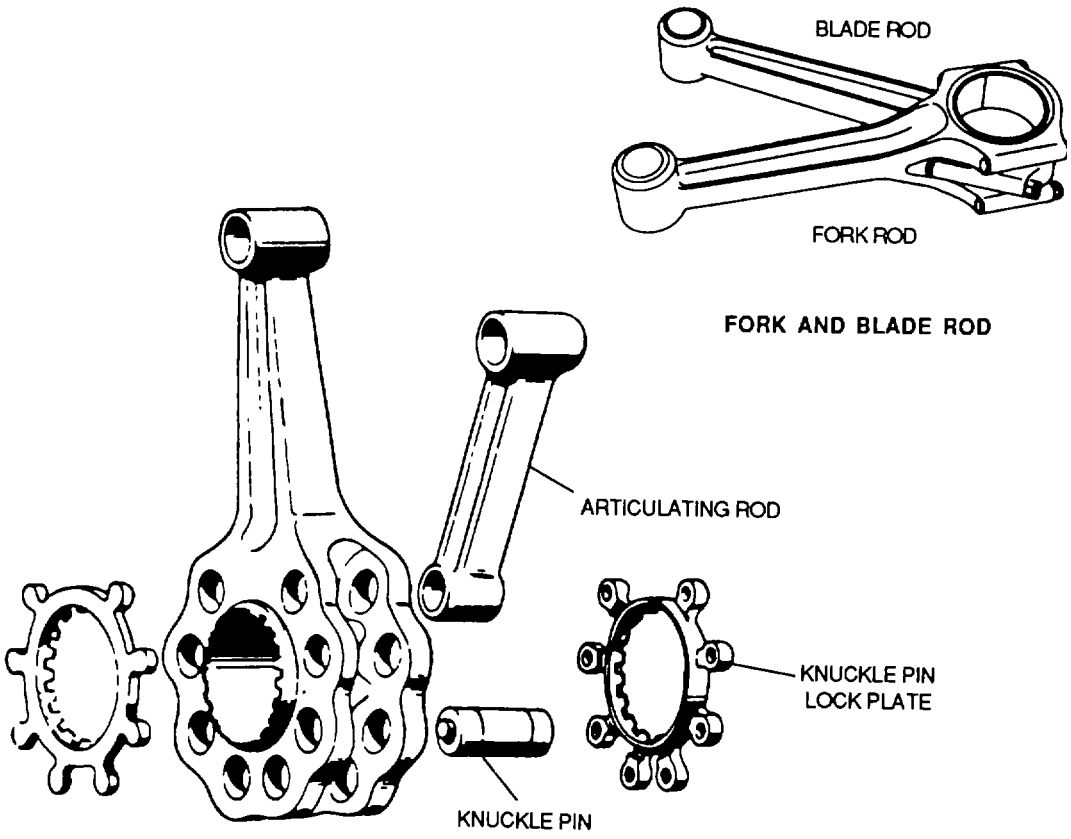

Figure 7-9. Connecting Rod Assemblies

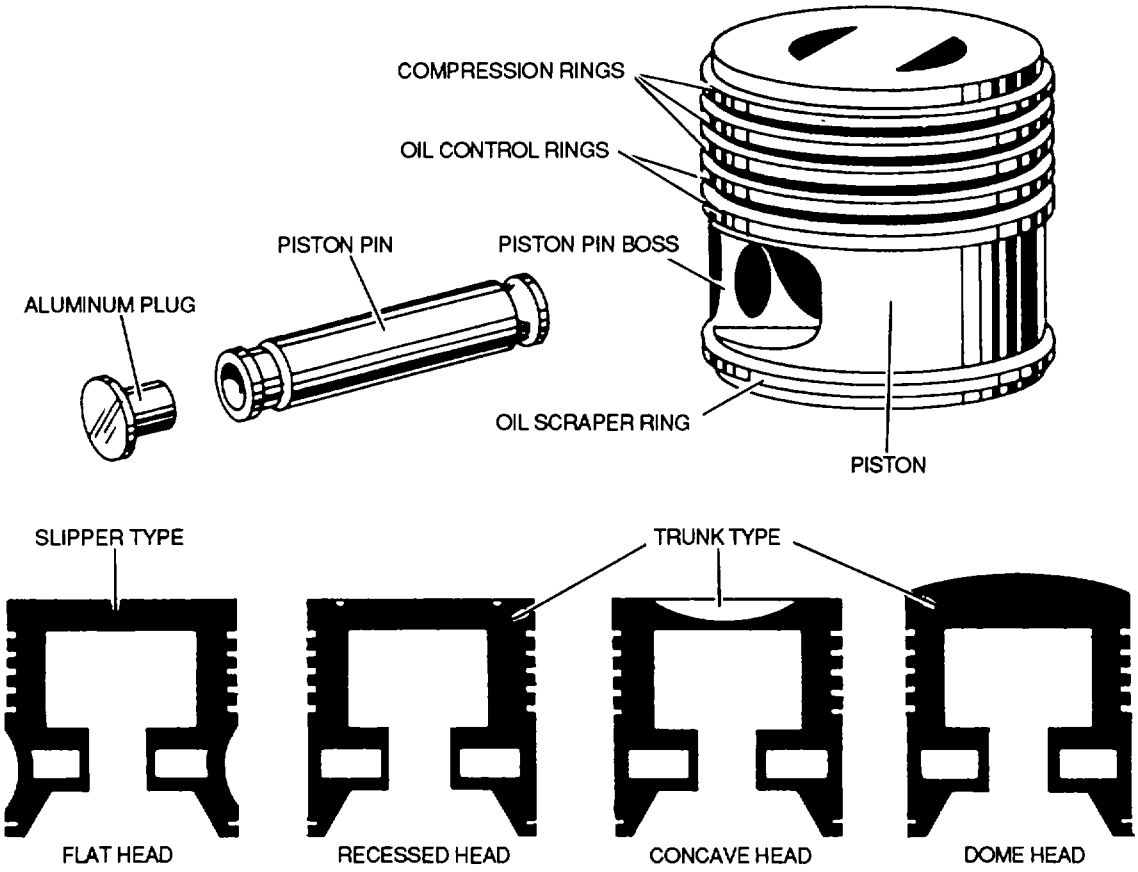

Figure 7-10. Piston, Pin, and Ring Assemblies

(2) Maintenance. Cylinder maintenance procedures are explained in the following paragraphs. All openings to a cylinder must be completely closed and sealed during the compression and power strokes In order to maintain proper compression and thus prevent power loss. The requirements for proper sealing are: good piston rings with no leakage between pistons and walls of the combustion chamber, tightly closing. Intake and exhaust valves, and proper valve timing to ensure highest efficiency obtainable when engine is operating at its normal rpm. Compression loss at any of these points results in reduced engine efficiency. Early detection and correction of these faults will prevent cylinder breakdown. Since most engine difficulties can be traced to a small number of cylinders, engine malfunction can be corrected by locating defective cylinders and taking corrective action. Each phase of cylinder operation, such as compression, fuel mixture, or ignition, must function properly to maintain cylinder compression.

NOTE

Dark stains adjacent to the cylinder head and barrel seam must not be misinterpreted. During engine operation, the high temperature thread lubricant used during barrel and head assembly may be extruded at the seam leaving a heavy discoloration. Such a condition is In no way hazardous to engine operation, therefore, verification of cylinder failure must be by means other than stains alone. A cylinder should be removed for head separation only if it displays visible damage and/or fails the normal compression test.

(a) Identification. Cylinders will be color coded around the barrel between the attaching flange and the lower barrel cooling fin with a 1/2-inch wide band of enamel, heat-stable, cadmium sulphide paint (see figure 7-12). The cylinder sizes and colors are listed below:

Standard Cylinder - Aluminum or Black

Chrome Plated - International Orange

0.010 Inch Oversize - Green

0.015 Inch Oversize - Gray

0.020 Inch Oversize - Yellow

NOTE

Chrome-plated cylinders are further Identified as illustrated In the following example 6-44, SAX-3, 20 would designate the third cylinder plated by San Antonio Air Material Area in June 1944, and the cylinder was 0.020 inch oversize when plated.

(b) Liquid lock. When an engine is shut down, the warm residual oil clinging to the power section surfaces flows downward toward lower cylinders. Some of this oil seeps past piston rings, accumulating in the combustion chamber. When sufficient liquid is present, the true compression ratio will be raised and extremely high pressure will be produced when the piston moves down on the compression stroke. These pressures can damage the cylinder, piston, or rod. The piston may actually press the liquid, forming what is known as a hydraulic or liquid lock (see figure 7-13). Observe the following precautions:

CAUTION

Do not rotate propeller in reverse direction of normal engine rotation. This will push the liquid Into intake pipes and return to cylinders on the next intake stroke.

- When propeller is rotating in the normal direction, the operator must be alert for any sign of piston being forced against high compression, evidenced by a sudden resistance, slowdown, or stoppage which would indicate an excess amount of liquid in the lower cylinder

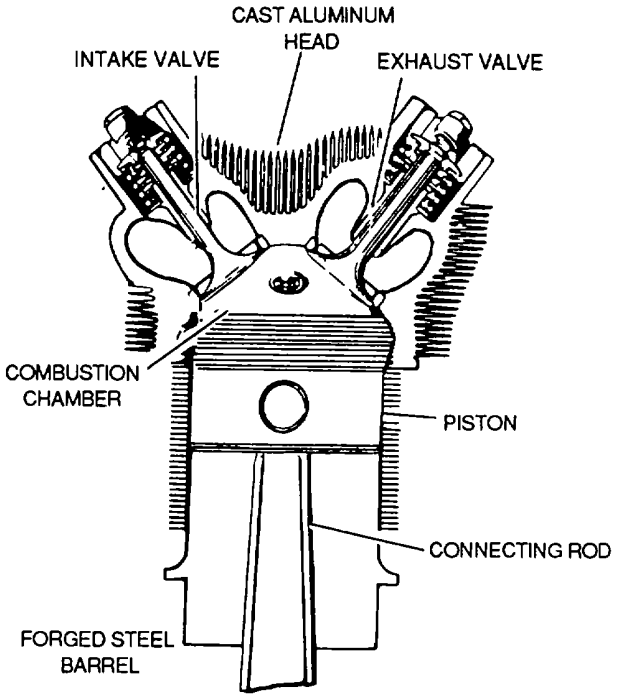

Figure 7-11. Cylinder Assembly

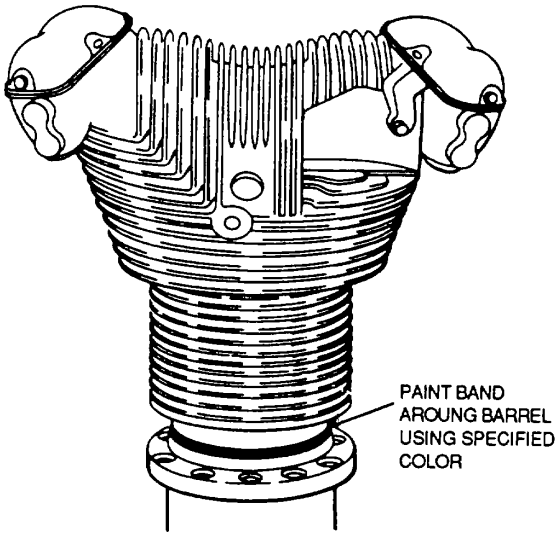

Figure 7-12. Marking of Cylinder

- Liquid locks are partial or complete. Hesitation in propeller rotation usually denotes a partial lock. If propeller stops, it usually denotes a complete liquid lock. Forcing engine through a complete liquid lock will cause Immediate engine failure.

- Liquid locks are also caused by oil in intake pipes as a result of preservation, fuel discharged into the intake system while crankshaft is not rotating, or oil flowing from push rod housing into rocker box, then seeping through intake or exhaust valve guides into intake or exhaust ports.

- Due to the mechanical advantage of a long propeller blade and the fact that two or more men per blade are used for propeller pull through, possibility of bending a rod by manual pull-through is more likely than by starter pull through. This is particularly true when a partial liquid lock is present, since the piston with a partial liquid lock will be very near the top of the stroke when force. Is required to rotate the crankshaft against the liquid lock Liquid lock may bend the connecting rod slightly, but not enough to move the lower piston ring out of the cylinder skirt, on the downward stroke, in which case internal failure may occur within the next 50 hours.

- If liquid lock is suspected, remove a spark plug from cylinder involved and allow liquid to drain out. Turn propeller several revolutions to make certain all liquid has drained from cylinder and induction lines, then install clean spark plug.

(c) Valve blowby . Valve blowby is Indicated by a hissing or whistling sound when engine is pulled through by propeller, turned with starter, or while idling at low speed. Correct valve blowby by first checking valve clearance and adjust as necessary. If valve clearance is excessive, proceed using the following procedures.

NOTE

If valve is stuck in the valve guide, correct clearance cannot be determined.

1 Stake valve by placing a fiber drift on rocker arm and valve stem, and then drift with a hammer.

2 Determine whether blowby has been eliminated by turning engine by hand or turning it through with starter.

3 When blowby is still present, perform a compression test.

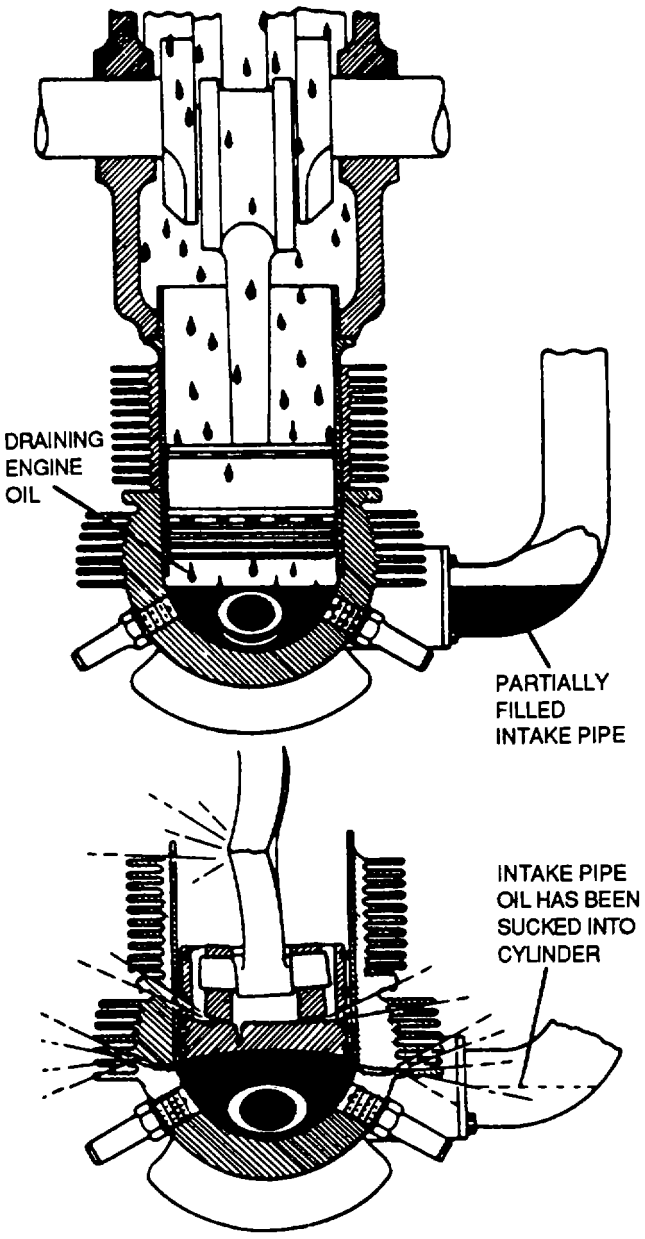

Figure 7-13. Liquid Lock

NOTE

When adjusting clearance and staking valve do not correct blowby and raise compression above minimum value as specified. In the applicable maintenance manual, replace cylinder as described in applicable maintenance manual.

(d) Compression test. A cylinder compression test locates defective cylinders. Replacement of these defective cylinders will prevent an unsatisfactory condition from progressing to the point of complete cylinder failure and eventual engine failure. Cylinders with compression below standard shall be replaced, thus preventing the use of engines with a large variation of compression between individual cylinders.

CAUTION

Ensure that Ignition switch is placed in OFF position after engine warmup has been accomplished. Damage may otherwise result.

1 When engine Is cold, operate it a short time to ensure that cylinder walls and piston rings are properly lubricated.

2 Remove one spark plug from each cylinder and insert compression tester.

3 Either disconnect starter booster coil or ground all disconnected spark plug lead.

4 Place throttle in FULL open position, keep fuel tank selector valve closed.

5 Use battery cart or auxiliary power unit to provide power for energizing engine starter.

6 Using engine starter, crank engine at least four revolutions.

NOTE

The tester contains a restrictive orifice to eliminate acceleration errors, and two compression impulses are required to obtain an accurate compression reading.

7 Analyze compression reading obtained.

8 Determine average cylinder compression values by totaling all cylinder compressions and dividing total obtained by number of cylinders. If any one cylinder is 20 percent below the average, or If any one cylinder is below the minimum compression value for that engine, that cylinder must be replaced.

NOTE

A variance of any one cylinder of 20 percent below the average of all cylinder compression readings of engine being checked warrants additional investigations. Two additional checks should be made prior to any detailed work to verify information obtained In first compression check.

9 The following conditions may possibly affect engine compression.

- Incorrect valve tappet clearances
- Worn, scuffed, or damaged pistons
- Broken piston nng
- Excessive wear of piston rings and cylinder walls
- Burned or warped valves
- Carbon particle between face and seat of valve
- Incorrect valve timing

NOTE

When a compression test on one or more cylinders of any row of cylinders is needed, the compression of all cylinders on the affected row will be tested, compression reading totaled, and minimum compression established in the same manner as when checking compression on all cylinders.

(e) Cylinders with below minimum compression. Engines having cylinders with below minimum required compression will be processed using the following procedures.

1 Remove rocker box covers on cylinders with low compression.

2 Turn crankshaft until piston is on top dead center of compression stroke and check intake and exhaust valves for clearance.

3 When valves are held open due to negative clearance, adjust valves to proper clearance.

4 Check for excessive leakage past piston by squirting engine oil into cylinder, pulling engine through compression stroke, and then checking compression.

5 Continue cylinder In service if compression Is up to required minimum.

(f) Cold cylinder check . The tendency for any cylinders to be cold or only slightly warm indicates lack of combustion or incomplete combustion within the cylinder. Perform this check using an approved cold cylinder indicator.

1 Head aircraft into wind to minimize irregular cooling of Individual cylinders.

2 Open cowl flaps.

NOTE

Do not close cowl flaps under any circumstances, as the resulting heat will affect the readings obtained and overheat the ignition leads.

3 Start engine. After engine is running, place ignition switch to position where excessive rpm drop is obtained. In cases where an excessive rpm drop has occurred on both magnetos, or where excessive manifold pressure is obtained at a given rpm, perform check twice, once on LEFT and once on RIGHT position.

4 Operate engine at roughest speed between 1200 and 1600 rpm or at rpm up to Ignition check speed until a cylinder head temperature reading of 302 to 338 °F (150 to 170 °C) is obtained or until temperature stabilizes at a lower reading.

NOTE

- **In cases where engine roughness is encountered at more than one speed, or there is an indication that a cylinder ceases to operate at idle speed or higher speeds, it will be desirable to run engine at each of these speeds and perform a cold cylinder check to pick out all dead or intermittently operating cylinders.**
- **In cases where lower output or engine vibration is encountered at speeds above 1600 rpm, when operating with ignition switch on BOTH, engine should be run at the speed where the difficulty Is encountered until cylinder head temperature reaches 302 to 338 °F (150 to 170 °C), or until temperature has stabilized at a lower valu**e.

5 Stop engine by moving mixture control to IDLE CUT-OFF position When engine ceases firing, turn off both individual and master Ignition switches.

6 Measure and record relative temperatures of each cylinder, starting with any cylinder and proceeding In numerical order around engine, by pressing tip of Indicator pickup rod of cold cylinder tester against each cylinder.

NOTE

It is essential that a firm contact be made at the same relative location on each cylinder in order to obtain temperature value This measurement must be performed in the shortest possible time after engine ceases firing.

7 Recheck cylinders that have low values and two cylinders having highest readings to determine amount of cooling during check.

8 Compare temperature readings obtained In order to determine which cylinders are dead or operating intermittently.

9 Examine magneto ground leads to determine that RIGHT switch position fires front plugs and LEFT switch position fires rear plugs. Make this examination prior to changing spark plugs, making ignition harness test on cylinders which are operating, or are operating intermittently. In addition, examine ignition leads.

NOTE

In cases where the cylinder is completely dead on the BOTH position, the difficulty may be due to incorrect valve clearances, impeller oil seal leaks, leaking intake pipes, or lack of compression (blowby).

10 Repeat cold cylinder check for other magneto positions on Ignition switch when necessary. Additional cold cylinder checks will be conducted at different speeds in event any roughness Is still encountered during ignition system check

NOTE

Cooling of the engine between checks is not necessary as airflow created by propeller and cooling effect of incoming fuel-air mixture into cylinder will be sufficient to cool any cylinders which are functioning on one check and fail to function on the following check.

(g) Chalk test. The chalk test should be used when the cold cylinder tester is not available. Test using the following procedures.

1 Mark each cylinde r with a piece of white marking chalk, A-A-320.

2 Run engine as outlined in paragraph (e) above.

3 Examine each mark after engine shutdown. Cylinders having marks unchanged In color are dead or operating intermittently. The marks for a normal operating cylinder will change to a pink color.

(h) Cylinder repair. Cylinder repair can be accomplished by using the following procedures as applicable

CAUTION

Do not damage adjacent fins Inadequate cylinder cooling may result.

1 Repair cracked, nicked, or broken cooling fins by profiling damaged area using a file to smoothly round all edges. Corners shall have at least a 1/4-inch radius and removed area nut shall not exceed one percent of the total fin area.

NOTE

Magnetic or dye-penetrant inspect fins that are profiled to outside of dome to ensure that crack does not extend into cylinder dome.

2 Repair broken or loose studs in tapped hole by using helical inserts.

NOTE

When more than two adjacent nuts are known to have been loose during engine operation, or when more than two adjacent studs have failed, cylinder will be replaced and all studs on the cylinder mounting pad replaced.

3 Place cover on a surface plate and, using a feeler gauge, measure clearance between surface plate and rocker box cover mounting surface. Refer to the applicable maintenance manual for allowable limits.

NOTE

Accomplish procedures 4, 5, and 6 when surface does not meet specified limits.

4 Place a small amount of valve grinding compound, A-A-1203, on a lapping plate.

NOTE

In the event no grinding compound is available, a fine abrasive cloth, Federal Specification P-C-451, may be used.

5 Position rocker box cover mounting surface down on lapping plate, and use a figure eight motion to keep an even pressure on cover.

6 When warpage cannot be eliminated without exceeding allowable limits given in the applicable maintenance manual, replace rocker box cover.

7 Replace leaking seals with like serviceable items.

8 Replace individual piston rin gs that are damaged upon installation of a complete cylinder and piston assembly. Refer to illustrated parts breakdown manual of applicable engine for correct size and type ring.

9 Replace cracked or broken rocker arms.

10 Replace bent pushrods.

11 Replace bent or cracked pushrod housing.

(i) Cylinder replacement. Cylinders will be replaced for the following reasons as described in the applicable maintenance manual.

- Low compression
- High oil consumption
- Excessive valve guide clearance
- Loose intake pipe flanges
- Loose or defective spark plug inserts (steel or brass)
- External damage, such as cracks
- Spark plug copper runout

NOTE

Engines that have spark plug copper runout on more than 25 percent of the cylinders will be removed from service. Carbon deposits must not be confused with copper runout.

g. Valves. The fuel-air mixture enters the cylinders through the intake valve ports, and burned gases are expelled through the exhaust valve ports. The head of each valve opens and closes these cylinder ports. The valves used In aircraft engines are the conventional poppet type. The valves are also typed by their shape and are called either mushroom or tulip because of their resemblance to the shape of these plants Figure 7-14 shows various shapes and types of these valves.

(1) Description. The valve head has a ground face which forms a seal against the ground valve seat in the cylinder heads when the valve is closed. The valve stem acts as a pilot for the valve head and rides in the valve guide installed in the cylinder head for this purpose. The valve stem is surface-hardened to resist wear The neck is the part that forms the junction between the head and the stem. The tip of the valve is hardened to withstand the hammenng of the valve rocker arm as it opens the valve. A machined groove on the stem near the tip receives the split-ring stem keys These stem keys form a locking to hold the valve spring retaining washer in place.

(2) Maintenance. Proper valve operation is of vital importance to satisfactory operation of the engine from the standpoint of stability and cylinder wear. Valve clearances establish valve timing when the engine is operating, and since cylinders receive fuel-air mixture from a common supply, the valve clearances should be

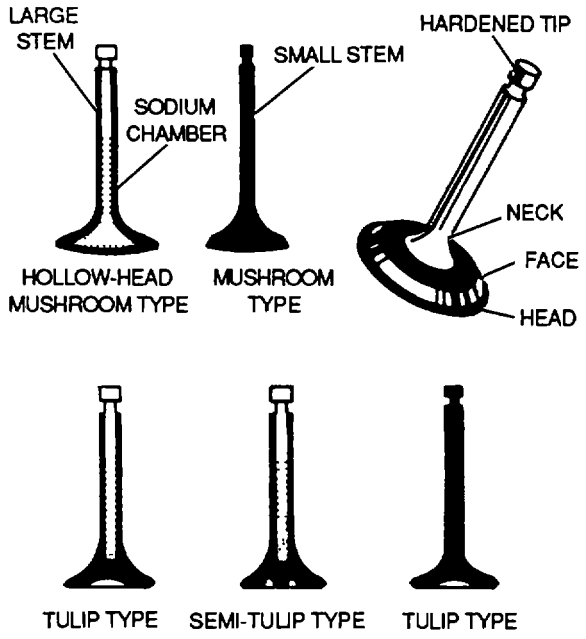

Figure 7-14. Valve Types

uniform. Temperature changes affect air-cooled engines to a greater extent than other engines, and there must be sufficient valve clearance to prevent valve from holding open when extreme cold is encountered, since holding open will make cold weather starting extremely difficult. Inadequate clearance or excessive clearance is conducive to valve failure; therefore, proper settings are essential to engine operation.

(a) Measuring and adjusting valve clearance When rough engine operation, backfiring, loss of compression, hard starting, or any malfunction which can be attributed to improper operation or clearance of valves occurs, valve clearance shall be measured and adjusted, using the following procedures;

1 Measure and adjust valve clearance in accordance with specific instructions contained In applicable engine maintenance manual.

2 Locate top dead center piston position.

3 Use feeler gauge (shaped so that end of gauge can be slipped in a straight line between valve and rocker arm roller or adjusting screw) specified in tools section of maintenance manual.

NOTE

Do not use excessive force to insert gauge between valve stem and adjustment screw or rocker arm roller.

4 Adjust valve clearances found to be out of adjustment according to specific procedures in engine maintenance manual.

(b) Reclamation and disposition of sodium-filled valves. The reclamation procedure for sodium-filled valves consists primarily of rebuilding the facing of exhaust valves and repairing the stems.

WARNING

Do not attempt to mutilate sodium-filled valves. The metallic sodium used in these valves, when contracting moisture, gives off highly flammable hydrogen gas, and when brought into contact with the skin often results in severe personal injury.

1 Sodium-filled valves definitely determined to be nonrepairable as a result of cracked or broken stems shall be processed for disposition In accordance with procedures established by Part 3, Chapter XV, DOD directive 4160 21M. Disposal of these nonrepairable valves shall be affected by one of the following methods.

- Burial, at least 30 inches below ground l evel, in a select location where future excavation is unlikely.
- By dumping at sea.

2 Values determined to be suitable for reclamation shall be prepared for shipment in accordance with provisions of AR 746-1.

(c) Establishing crankshaft position using top center indicator and protractor. The proper crankshaft position must be established prior to checking or setting valves using the following procedures.

1 Determine ratio of top center indicator, as shown in figure 7-15, pointer travel to crankshaft travel.

2 Install Indicator in either spark plug hole of number one cylinder.

3 Adjust arm of indicator so that full scale deflections will be obtained as piston moves through its full stroke.

4 Install protractor and pointer specified in engine maintenance manual on one of engine accessory drive pads.

5 Rotate crankshaft in normal direction of rotation until piston is coming up on compression stroke.

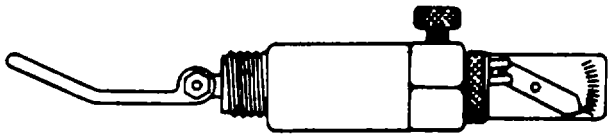

Figure 7-15. Top Center Indicator

NOTE

The compression stroke may be detected by a buildup of air pressure when thumb is held over open spark plug hole.

6 Continue rotating crankshaft until piston contacts arm of indicator and moves pointer to any marker on Indicator face.

7 Note mark reached and record protractor reading.

8 Move crankshaft slowly in direction of rotation until Indicator pointer shows that piston has moved to top of stroke and is going down.

9 Stop turn ing crankshaft when pointer moves to exact same position as In step 6.

10 Read and record protractor reading in degrees.

NOTE

True top dead center is halfway between two protractor readings.

11 Back up crankshaft and rotate it forward in direction of rotation until protractor pointer indicates top dead center (in degrees).

12 Loosen pointer and set to zero without moving crankshaft.

NOTE

When reinstalling pointer, allow for gear backlash by moving pointer opposite its direction of rotation.

13 Recheck top dead center position to ensure that a given piston position will result In equal protractor readings before and after zero mark.

(d) Establishing crankshaft position upon piston position indicator . The following steps outline another method of establishing the crankshaft position.

CAUTION

Use piston position indicator with 18mm threads for 18mm spark plug threads and 14mm threads for 14mm spark plug threads. Damage to threads may otherwise result.

1 Remove spark plug and install piston position indicator, as shown in figure 7-16, with correct arm and calibrated scale.

2 Rotate crankshaft in direction of rotation until piston is coming up on compression stroke.

3 Separate body from indicator assembly and screw housing into spark plug bushing until it seats firmly. Insert indicator assembly into body, as shown in figure 7-16..

4 Push slide pointer upward in slot until it reaches end of slot and is stopped by pivot arm.

5 Pull crankshaft slowly in direction of rotation until arm moves pointer maximum distance and starts to move back.

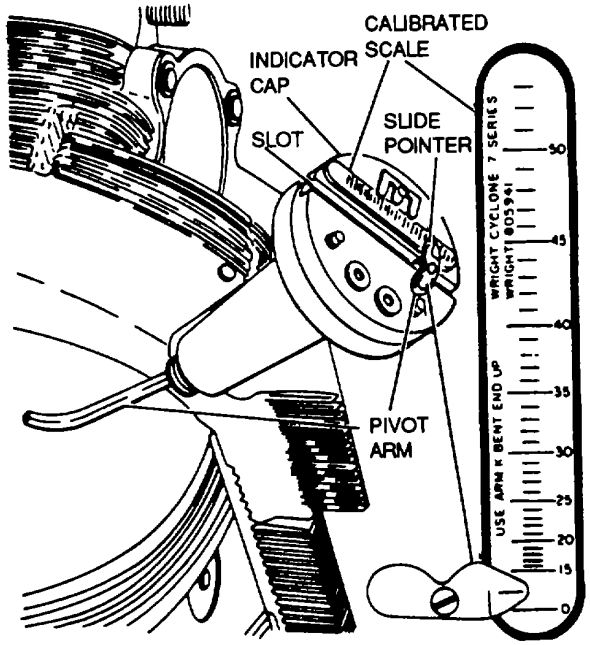

Figure 7-16. Installation of Piston Position Indicators

6 Set calibrated scale until zero mark on scale and scribe on pointer are aligned.

7 Move pointer back to top of slot or until it contacts pivot arm.

8 Turn crankshaft in direction opposite normal rotation until pivot arm returns to top of slot.

9 Recheck zero mark of calibra ted scale against reference mark on slide pointer.

10 Move slide pointer to top of slot or until it contacts pivot arm.

11 Rotate crankshaft In direction of rotation. Movement of slide pointer by the pivot arm will Indicate crankshaft position In relation to true top dead center on the calibrated scale.

(e) Alternate methods of locating leaky intake exhaust valves. Alternate methods of locating leaky intake and exhaust valves are listed In the following paragraphs.

1 Engine run test. Prior to sto pping engine, run it up to 1000 rpm and move mixture control to IDLE CUT-OFF. The engine will turn over six or more revolutions after combustion ceases. A very slight burning of an exhaust valve will be evidenced by a pronounced slush from the affected cylinder This sound occurs each second revolution of the engine.

2 Wheeze test Perform wheeze test for locating leaky intake and exhaust valves by pulling piston to top dead center, locate faulty valve by listening for noise in exhaust collector or Intake duct which indicates air leaking past respective valve.

3 Compressed air test Admit compressed air into cylinder through spark plug hole Restrain piston at top of dead center Locate leaking valve by listening for noise in exhaust collector and intake duct.

(f) Built-m timing marks. Some engines have reference timing marks built into the engine, as shown in figure 7-17. Engines without a propeller reduction gear will have the timing mark, a scribe mark or a pin, on the propeller shaft and a corresponding reference mark on the surface of the nose section next to the shaft. Refer to the applicable maintenance manual for location of such marks.

NOTE

When using timing marks to position the crankshaft, sight straight across the stationary pointer or mark on the nose section to the other mark. Any angle incurred in sighting will cause error when positioning the crankshaft.

h. Accessories. Accessory units such as fuel pumps, vacuum pumps, oil pumps, generators, alternators, magnetos, starters, filters, superchargers, and turbochargers are attached to the engine. Refer to the applicable maintenance manual for specific maintenance procedures.

i. Ignition System. The ignition system must deliver a high-tension spark to each cylinder of the engine in firing order at a predetermined number of degrees ahead of true top dead center. Voltage output of the system must be such that the spark will jump the spark plug gap under all operating conditions with no tendency for electrical leaks. Timing and replacement of parts make up most of the Ignition system maintenance.

(1) Magneto system. The magneto, a special type of engine-driven ac generator, uses a permanent magnetic source. The magneto develops the high voltage which forces a spark to jump across the spark

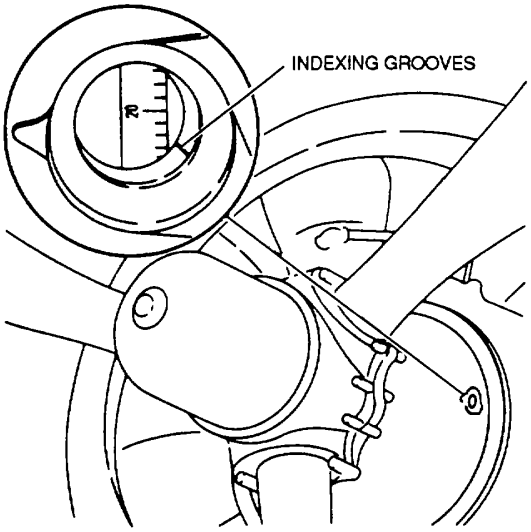

Figure 7-17. Built-In Timing Marks

plug gap In each cylinder. Magneto operation is timed to the engine so that a spark occurs only when the piston is on the proper stroke at a specified number of crankshaft degrees before the top-dead-center piston position. Maintenance of magnetos consists primarily of replacing defective magnetos or components as explained in the following procedures:

(a) Prior to installation, perform internal timing check.

1 Check breaker point adjustments, breaker point dwell on master cam lobe, and distributor alignment check.

2 Use reference marks on breaker cam, distributor rotor, and magneto housing incorporated on most assemblies to perform internal timing check.

(b) Time high-tension Ignition system magneto-to-engine, at a definite crankshaft position as follows.

1 Position crankshaft to timing or spark advance position using a piston position indicator.

2 Align internal timing marks, and slide magneto into place.

3 Shift magneto to retard position, and turn magneto to advance until breaker points begin to open as indicated by timing light.

4 Install mounting nuts, magneto cover, and leads.

(c) Check timing of high-tension ignition system magneto after a new magneto is Installed or if incorrect timing is suspected, as follows.

1 Determine correct crankshaft position and check internal magneto timing marks.

2 Turn crankshaft one-fourth turn in opposite direction of normal rotation.

3 If magneto has an impulse coupling, rotate crankshaft in normal direction beyond timing cylinder top-dead-center position; when impulse coupling clicks, rotate crankshaft in opposite direction to approximately 5 degrees advance of timing position.

4 Connect timing light and turn ignition switches to ON position.

5 Apply even and equal torque to each of cam retaining screws In direction opposite normal rotation to remove gear train backlash.

6 While holding backlash out, turn crankshaft until points begin to open as indicated by timing light.

7 If necessary, adjust magneto so that timing light indicates points are beginning to open at proper firing position.

(d) Install and time low-tension I gnition system magneto-to-engine, at a definite crankshaft position, using the following procedures.

1 Depress magneto timing plunger and turn magneto shaft until plunger engages fully In notch of magneto shaft.

2 Position magneto In place while holding plunger.

3 If magneto does not line up with centerline of engine, remove magneto, release plunger, and turn magneto drive shaft 90 degrees. Repeat until magneto lines up properly.

4 Hold plunger depressed and turn magneto counterclockwise on its flange as far as necessary to remove gear backlash.

5 Install magneto bolts securely in place.

(e) Check timing of low-tension ignition system magneto after a new magneto is installed or incorrect timing is suspected.

1 Determine correct crankshaft position.

2 Rotate engine one-fourth turn in opposite direction of normal rotation and slide pointer of piston position Indicator to top of scale.

3 Turn engine in direction of rotation until slide pointer is starting to move down.

4 Depress and hold timing plunger on magneto, while continuing rotation of engine, until timing plunger is fully engaged.

5 See that timing indicator shows correct degree of advanced timing.

(2) Ignition harness. The ignition harness, as shown in figure7-18, contains an insulated wire for each cylinder that the magneto serves in the engine. One end of each wire is connected to the distributor block and the other end is connected to the proper spark plug. The ignition harness serves a dual purpose. It supports the wires and protects them from damage by engine heat, vibration, or weather. It also serves as a conductor for stray magnetic fields that surround the wires as they momentarily carry high-voltage current. By conducting these magnetic lines of force to the ground, the ignition harness cuts down electrical interference with the aircraft radio and other electrically sensitive equipment. When the radio and other electrical equipment are protected in this manner, the ignition harness wiring is said to be a shield. Without this shielding, radio communication would become virtually impossible. The ignition harness check consists of a visual and an electrical check using the following procedures:

(a) Examine all accessible parts of distributors, harnesses, and leads for chafing, broken insulators, corrosion, moisture, damaged or dirty terminals, and security of mounting at the time specified in the applicable maintenance manual.

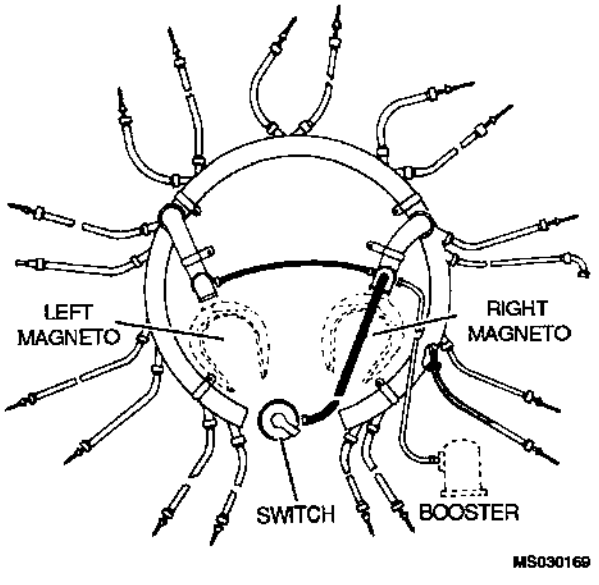

Figure 7-18. Ignition Harness

(b) Repair or replace defective parts as necessary. Keep all parts clean and free of foreign matter.

NOTE

The high-tension system manifold is never taken apart in the field, as this will destroy the elastic gel seal.

1 Clean dirt and grease from harness by wiping with a clean, dry cloth.

WARNING

Cleaning Solvent, HFE-71DE, is toxic to eyes, skin, and respiratory tract, and decomposes into other hazardous products when exposed to extreme heat. Wear chemical protective gloves and goggles/face shield. Avoid repeated or prolonged contact. Use only in well-ventilated areas. If ventilation is not adequate, use approved respirator as determined by local safety/industrial hygiene personnel. Keep away from open flames, welding, or other sources of extreme heat.

Isopropyl Alcohol, TT-I-735, is flammable and toxic to eyes, skin, and respiratory tract. Wear protective gloves and goggles/face shield. Avoid repeated or prolonged contact. Use only in well-ventilated areas (or use approved respirator as determined by local safety/industrial hygiene personnel). Keep away form open flames, sparks, or other sources of ignition.

2 Clean terminals with Isopropyl Alcohol, TT-I-735, or HFE-71DE.

NOTE

Replace ignition harness leads when more than three wire strands are broken in one inch of harness length or if insulation is damaged.

(c) Perform a high-voltage breakdown test when an ignition malfunction occurs and after cable replacement in rewireable harness or leads. Use an approved high-voltage tester, and test for serviceability as follows:

1 Remove all leads from spark plugs.

2 Remove spark plug elbow assembly from ignition lead.

3 Examine lead insulation for evidence of chafing, breaks, or holes. Replace parts as required.

4 Ground all leads, except one for number 1 cylinder, to engine.

5 Connect ground lead of tester to engine, and connect high-tension lead to number 1 cylinder lead.

6 Test and record any leakage detected.

7 Test remaining leads.

8 When two leads from same distributor show leakage, remove ground from both leads and repeat test. When leakage is stopped by removing ground from other lead, leakage is probably betweentwo leads (in distributor block). When disconnecting ground of other lead does not stop leakage, check for leaks between individual leads and shielding.

WARNING

Cleaning Solvent, HFE-71DE, is toxic to eyes, skin, and respiratory tract, and decomposes into other hazardous products when exposed to extreme heat. Wear chemical protective gloves and goggles/face shield. Avoid repeated or prolonged contact. Use only in well-ventilated areas. If ventilation is not adequate, use approved respirator as determined by local safety/industrial hygiene personnel. Keep away from open flames, welding, or other sources of extreme heat.

Isopropyl Alcohol, TT-I-735, is flammable and toxic to eyes, skin, and respiratory tract. Wear protective gloves and goggles/face shield. Avoid repeated or prolonged contact. Use only in well-ventilated areas (or use approved respirator as determined by local safety/industrial hygiene personnel). Keep away form open flames, sparks, or other sources of ignition.

NOTE

Rotate crankshaft to a position that will eliminate distributor finger leakage.

9 When a recheck indicates that distributor block may be at fault, scrub thoroughly with Isoproply Alcohol, TT-I-735, or HFE-71DE, dry thoroughly, and apply a thin coat of wax. Mix 1 part wax to 5 parts trichloroethylene, Federal Specification O-T-634, maintained at a temperature of 130 to 140°F (54 to 60°C).

10 Repeat steps through above.

(d) The low-tension system operates at relatively low voltages (150 to 400 volts) and is not seriously affected by moisture. Check system as follows:

1 Check all accessible parts of harness and leads for chafing, broken conduit, corrosion, or misaligned pins in electrical connectors at intervals specified in inspection requirements manual.

CAUTION

Do not attempt to repair harness without the proper special tools. Damage to harness may otherwise result.

2 Tighten all loose connectors and tape over frayed sections of nylon covered harness.

3 Test all low tension wiring and distributor blocks, connection plates, etc., for continuity. Test insulation resistance with a tester capable of delivering 1000 volts dc (maximum) at 1 milliampere, or an ohmmeter (20,000 ohms per volt). The insulation resistance should exceed 1 megohm, unless otherwise specified.

(3) Spark plugs. The function of the spark plug in an ignition system is to conduct a short impulse of high voltage current through the wall of the combustion chamber. Inside the combustion chamber it provides an air gap across which this impulse can produce an electric spark to ignite the fuel-air charge. For spark plug service, maintenance instructions, and list of approved spark plugs, refer to TM 55-2925-200-25.

(4) Ignition switches. All units in an aircraft ignition system are controlled by an ignition switch in the cockpit. The type of switch used varies with the number of engines on the aircraft and the type of magnetos used. All switches, however, turn the system off and on in much the same manner. The ignition switch is different in at least one respect from all other types of switches in that when the ignition switch is in the OFF position, a circuit is completed through the switch to ground. In other electrical switches, the OFF position normally breaks or opens the circuit. The following procedures are for ignition switches general maintenance:

(a) Replace defective switches and broken ground wires.

(b) Tighten all loose switch and cable terminal attaching nuts.

(c) For specific details on any ignition switch, refer to applicable maintenance manual.

(5) Booster system. Starting aids such as an induction vibrator or booster coil must be used to provide enough voltage to the spark plug. The induction vibrator (or starting vibrator), as shown in figure 7-19, consists essentially of an electrically operated vibrator,

a condenser, and a relay. These units are mounted on a base plate and enclosed in a metal case. The booster coil assembly as shown in figure 7-20, consists of two coils wound on a soft iron core, a set of contact points, and a condenser. General maintenance of the booster system is described in the following procedures:

(a) Repair induction vibrators in accordance with the applicable maintenance manual and table 7-1.

(b) Replace defective booster coils and all broken or frayed wiring. Tighten all loose connections.

(c) Replace magneto if impulse coupling is defective.

(d) Test ignition booster system for proper operation as follows:

1 Remove front spark plug from most accessible cylinder.

2 Turn crankshaft until piston is observed to be in top position on compression stroke.

3 Reconnect spark plug and ground plug shell to engine.

4 Place carburetor in IDLE CUT-OFF position.

5 Place main fuel valve in CLOSED position.

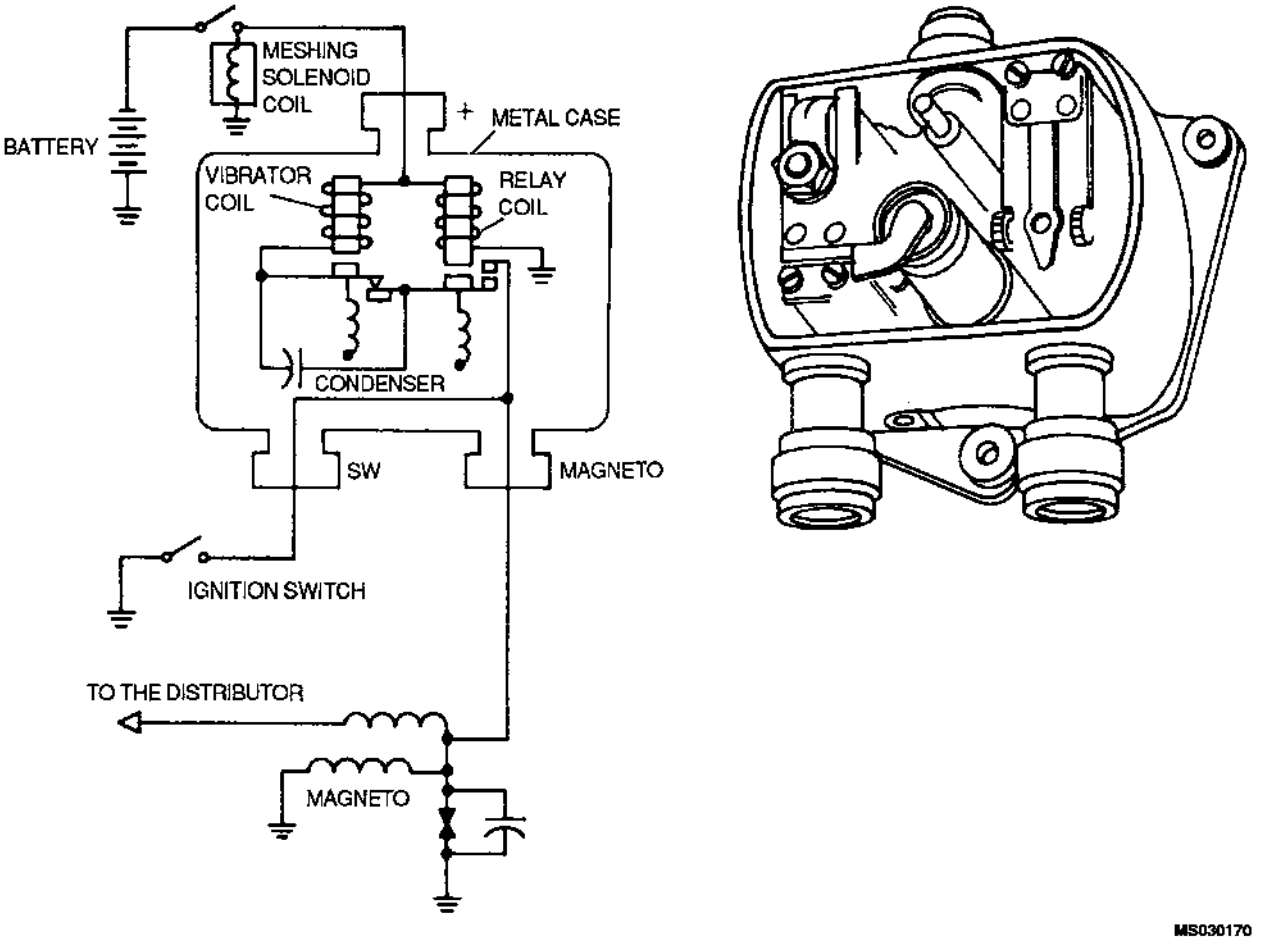

Figure 7-19. Induction Vibrator

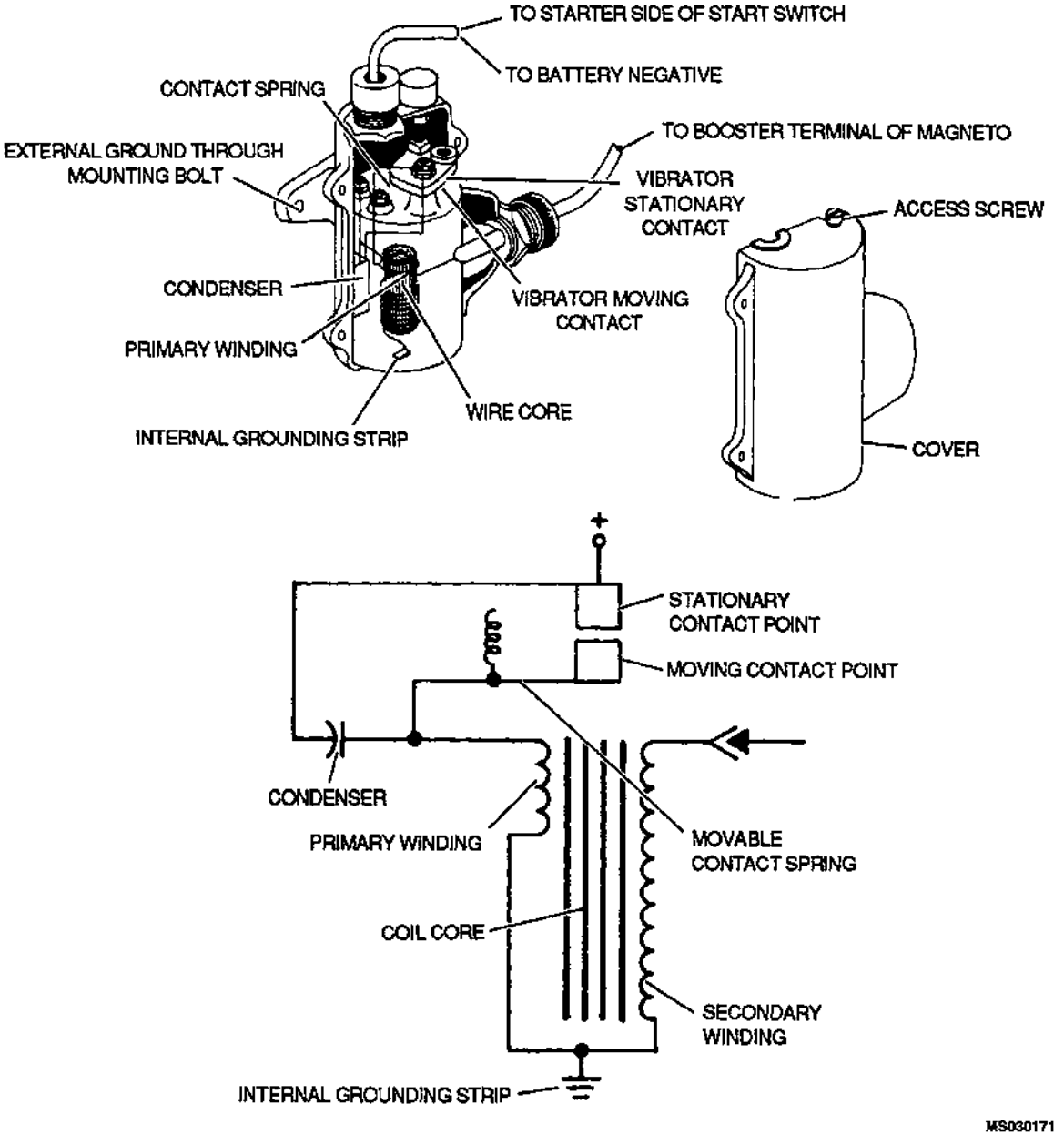

Figure 7-20. Booster Coil

Table 7-1. Repairing Induction Vibrators

Trouble	Probable cause	Remedy
Unit fails to function	Not grounded	Ensure mounting bolts contact grounding plate.
	Loose or disconnected positive cable	Ensure terminal clip is secured to positive cable and positive terminal post.
	Loose or disconnected MAG or IGN. SW TERMINALS	Ensure both cables are secured to terminal nuts with springs. Tighten nuts until a f rm contact is made with the terminal.

WARNING

Cleaning Solvent, HFE-71DE, is toxic to eyes, skin, and respiratory tract, and decomposes into other hazardous products when exposed to extreme heat. Wear chemical protective gloves and goggles/face shield. Avoid repeated or prolonged contact. Use only in well-ventilated areas. If ventilation is not adequate, use approved respirator as determined by local safety/industrial hygiene personnel. Keep away from open f ames, welding, or other sources of extreme heat.

Isopropyl Alcohol, TT-I-735, is f ammable and toxic to eyes, skin, and respiratory tract. Wear protective gloves and goggles/face shield. Avoid repeated or prolonged contact. Use only in well-ventilated areas (or use approved respirator as determined by local safety/industrial hygiene personnel). Keep away form open f ames, sparks, or other sources of ignition.

	Dirt between points	Draw paper, Federal Specif cation UU-P-268, dipped in Isopropyl Alcohol, TT-I-735, or HFE-71DE, across points and air dry.

6 Turn fuel booster pump to OFF position.

7 Turn ignition switch to BOTH position.

8 Place master ignition switch in ON position.

9 Engage starter, observing all ground safety rules.

10 Note continual f ow of high voltage across spark plug points.

7-5. ENGINE REMOVAL CRITERIA. The life of an aircraft engine between overhauls is dependent upon many factors, such as quality of original manufacture or last overhaul, the type of operation being accomplished, and the eff ciency of preventive maintenance. It is possible to establish a maximum expected life of an engine based on service records and engineering data. At overhaul depots, it has been found that many engines are changed needlessly. A complete investigation of the engine should be made before removal, except in cases of complete internal failure or expiration of operating time limits. (Refer to AR 750-23.)

a. Expiration of Operating Time Limit. Engine removal and replacement shall be accomplished in accordance with TM 55-1500-328-25 when normal Maximum Allowable Operating Times (MAOT) are accumulated in accordance with the applicable aircraft -20 maintenance manual (Chapter 3, Section IV).

b. Sudden Engine Stoppage. Sudden stoppage is def ned as the complete stalling of the engine due to a propeller or rotor accident or gear box failure. Such engines shall be replaced.

NOTE

Replace engine when engine is stalled by propeller or rotor striking an immovable object, such as a ramp or building or when engine is operating at any rpm and is stalled suddenly due to some internal cause such as gear box or crankshaft failure.

c. Sudden Reduction in Engine RPM. When the propeller or rotor strikes a small object which results in a sudden reduction in engine rpm, the engine shall be thoroughly checked using the following procedures:

(1) Make a thorough external examination of engine crankcase and nose section to determine whether any parts have been damaged. When damage is found which cannot be corrected by line maintenance, remove engine.

(2) Remove magnetic sump plugs, if present, and engine oil screens or filters. Examine for presence of metal particles.

(3) Remove engine sump plugs, drain oil into a clean container, strain through a clean cloth, and examine cloth and strained oil for metal particles.

NOTE

- Metal particles found in the sumps or in oil screens or filters will not be considered the results of an internal failure caused by sudden stoppage, since the screens or filters are located at the oil inlet to the engine. Sudden stoppage, therefore, will not permit circulation of the oil to the extent that metal particles would be deposited on the screens or filters.
- When heavy metal particles are found in the oil, it indicates a definite engine failure, and engine must be removed. However, when metal particles present are similar to fine filings, continue examination of engine to determine its serviceability.

(4) Remove propeller and examine crankshaft, or propeller drive shaft on reduction-gear engines, for misalignment.

(5) Clamp a test indicator to nose section of engine and remove front or outside spark plugs from all cylinders on radial engines and top spark plugs on all opposed engines.

(6) Turn crankshaft and observe if crankshaft or propeller shaft runs out at either front or rear propeller cone seat location, as shown in figure 7-21.

NOTE

- When there is runout of more than 0.015 inch full indicator reading of crankshaft or propeller drive shaft at front cone seat location, remove engine. Even though runout of crankshaft or propeller drive shaft at front cone seat is less than 0.015 inch full indicator reading, examine rear cone seat location.
- When any runout is found at rear cone seat location, which is not in same plane as runout at front cone seat location, remove engine.
- When crankshaft or propeller drive shaft runout does not exceed these limits, install serviceable propeller and make an additional check by tracking propeller at tip in same plane perpendicular to axis of rotation to assure that blade track tolerance is within limits.

(7) Start engine and examine for smooth operation and adequate power output. When engine operates properly during this ground check, shut engine off and again examine oil system for metal particles.

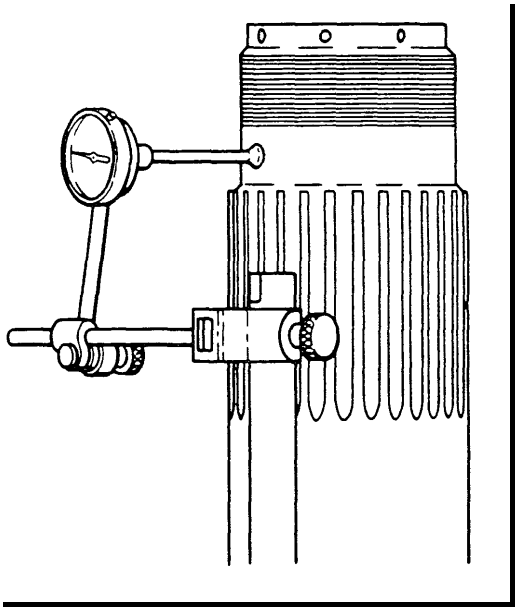

Figure 7-21. Checking Propeller Shaft Runout

(8) When there are no heavy metal particles in engine, give engine a two hour flight test.

NOTE

When engine operated properly during flight test, examine oil system for metal particles. If no metal is found, continue engine in service, but examine oil screens for presence of metal after 10 hours of operation. If no indication of internal failure is found after 20 hours of operations, engine requires no further special examination.

d. *Metal Particles in Oil*. Generally, metal particles on engine oil screens or on magnetic sump plugs indicate partial internal failure of the engine. However, due to the construction of aircraft oil systems, it is possible that metal particles may have collected in sludge in the oil system at the time of previous engine failure, consequently, this must be taken into account when metal particles are found in engine oil screens or on magnetic sump plugs. Frequently, carbon breaks loose from the interior of the engine in large pieces which have the outward appearance of metal. However, carbon can be distinguished from metal by placing the foreign material on a flat metal object and hitting with a hammer. If material is carbon, it will disintegrate when struck with a hammer, whereas metal will either remain intact or change shape, depending upon its malleability.

CAUTION

An oil soaked rag can very easily cause spontaneous combustion unless placed in a tightly closed container, such as a quart or pint can with a press-fit lid.

NOTE

Before removing an engine for suspected internal failure, as Indicated by foreign matter on the oil screens or oil sump plugs, collect all obtainable metal particles for analysis and samples. To save fine metal particles, it may be necessary to strain the oil through a cloth. The cloth and metal particles can be placed in a clean metal container and sent with engine for overhaul.

e. *Identification of Metal Particles.* Metal particles found in an engine may be of five kinds steel, tin, aluminum, silver, and copper (or bronze). A visual inspection as to color and hardness will occasionally be sufficient to determine the kind of metal present. When visual inspection does not positively identify the metal, the kind of metal present may be determined by a few simple tests performed with a permanent magnet, electric soldering iron, or approximately 2 ounces of hydrochloric acid and nitric acid as explained in the following paragraphs.

WARNING

Exercise care in handling acid injury or death to personnel may otherwise result.

NOTE

The information in this paragraph is not intended to be a substitute for, nor release from the requirement for compliance with the Army Oil Analysis Program (AOAP) program directed in accordance with TB 55-6650-300-15.

(1) Steel particle identification. Steel particles can be Isolated by means of a permanent magnet.

(2) Tin particle Identification. Tin particles can be identified by their low melting point. A soldering iron should be cleaned, heated to approximately 260 °C (500°F), and thinned with 50-50 solder (50 percent lead to 50 percent tin) Wipe off excess solder. A tin particle dropped on heated Iron will melt and fuse with the solder. Take care to avoid excessive overheating of iron during this test.

(3) Aluminum particle identification . Aluminum particles may be identified by their respective reaction with hydrochloric acid. When a particle of aluminum is dropped into hydrochloric acid it will fizz with a rapid emission of bubbles. The particle will gradually disintegrate and form a black residue (aluminum chloride).

(4) Silver and copper particle identification. Silver and copper (or bronze) may be identified by their respective reactions in nitric acid. When a silver particle is dropped into nitric acid, it will react rather slowly, producing a whitish fog in the acid. When a particle of copper (or bronze) is dropped into nitric acid it will react rapidly, producing a bright green cloud in the acid. There is no need in this instance to separate copper from bronze.

f. Significance of Metal Particles. Generally, when metal particles are found and kind of metal present is determined, serviceability of engine will depend upon quantity and form of metal. Granular metal particles, in any amount greater than a trace, require a very careful inspection of engine, as presence of these particles is usually an indication of an impending failure. Each kind of metal, however, must be judged individually. Paragraphs (1) through (5) are intended as a guide in judging serviceability of engine after kind of metal has been determined.

(1) Steel particles. When steel particles are found in splinter or In granular form, the engine must be removed Thin steel flakes, when found In quantities not greater than 20 flakes, may not require engine removal. A small quantity of steel flakes will not cause engine bearing failure. When thin steel flakes accompanied by aluminum flakes are found, these flakes are probably the result of a warped piston ring land or hole burned in a piston. Replacement of a defective piston and cylinder assembly will correct the difficulty. When not accompanied by aluminum flakes, it Is possible that steel flakes are from foreign matter introduced into engine through oil tank.

(a) Test engine in accordance with the applicable maintenance manual If more than five additional flakes are found on oil screen and sump inspection after runup, remove engine. If five or less flakes found, the engine may be released for service in accordance with the applicable maintenance manual.

(b) When not more than 20 thin steel flakes are found and they are accompanied by thin aluminum flakes, proceed as follows:

1 Carefully inspect cylinders by visual examination of cylinder bore and by compression check In an effort to locate faulty piston. A bright streak along cylinder barrel or any evidence of scuffing would be an indication of a warped piston ring land. Warped lands are predominant In winter operations and occur most frequently on lower cylinders.

2 When not more than two faulty cylinders are found, replace faulty piston and cylinder assemblies before continuing with procedure. When more than two faulty cylinders are found by inspection, remove engine.

3 After faulty cylinders have been changed or when no faulty cylinders are found, test engine In accordance with the applicable maintenance manual.

4 If more than 2 additional steel flakes or 15 aluminum flakes are found during screen and sump inspection after engine runup, remove engine. If less than these quantities are found, engine may be released for service in accordance with the applicable maintenance manual.

NOTE

Ring fuzz may be on oil sump plug of any normal engine. These very fine hairlike particles are the result of normal seating of piston rings and cylinders and are not cause for any concern regarding serviceability of engine.

(2) Tin particles. Tin in any quantity may be disregarded. Since tin is used only in plating engine parts and in thickness not greater than 0.0005 inch, granular tin will not be found.

(3) Aluminum particles. When aluminum particles are found, perform the following procedures:

(a) When granular aluminum particles are found, proceed as follows:

NOTE

The presence of aluminum particles in granular form may be an indication of piston failure.

1 Inspect cylinders by visual examination of cylinder bores and a compression check in an effort to locate a faulty piston.

2 When not more than two faulty pistons are found, faulty pistons and cylinder assemblies will be changed before continuing with procedure. When more than two faulty pistons are found by inspection, remove engine. After faulty pistons and cylinder assemblies have been changed, or when no faulty pistons are found, continue with procedure.

3 Drain oil system, flush oil tank, and clean oil screens.

4 Test engine in accordance with the applicable maintenance manual.

5 If not more than two additional granular particles are found during screen and sump inspection after runup, engine may be released for service in accordance with the applicable maintenance manual.

(b) When aluminum flakes are found, proceed as follows:

NOTE

Aluminum flakes may not necessarily require engine removal In winter operations, when warped piston ring lands are frequent, considerable quantities of aluminum from pistons may be discharged Into engine oil system. It will be necessary to exercise judgment before continuing with the following procedure, for Instance, if oil sump or screen is found choked with a mass of aluminum flakes or particles, regardless of size, it will probably be necessary to remove engine even though faulty piston can be located.

1 Make a careful Inspection of cylinders by examination of cylinder bores and a compression check In an effort to locate faulty piston.

2 When not more than two faulty pistons are found, change faulty piston and cylinder assemblies before continuing with procedure. When more than two faulty pistons are found, remove engine If two or less faulty pistons are found, continue with procedure.

3 Drain oil system, flush oil tank, and clean oil screen.

4 Test engine In accordance with the applicable maintenance manual.

5 If more than five additional aluminum flakes are found during screen and sump inspection after runup, remove engine. If less than this quantity is found, engine may be released for service in accordance with the applicable maintenance manual.

(4) Silver particles. Silver particles in granular form indicate a master rod bearing failure in advanced stages. When these particles are found in any quantity, remove engine. Silver is used in plating numerous other parts, and silver flakes, not exceeding 10 in number, do not necessarily indicate a part failure. Since silver is quite soft, some small flakes will occasionally be released by normal working of these parts. A very small quantity of silver from master rod bearings will make a large number of tiny flakes as it passes through roller bearings or gears within engine. Large quantities of silver flakes indicate an excessive loss of bearing or plating surface and engine must be removed as a precautionary measure.

(5) Copper or bronze particles. Copper or bronze particles, in granular form and in quantities greater than a few particles, indicate disintegration of a bushing or valve guide and engine must be removed. Copper or bronze flakes, in quantities not exceeding 10 flakes, do not necessarily indicate part failure. Bronze flakes may be formed in small quantities through normal seating of bushings or valve guides. Larger quantities of copper or bronze flakes, however, may Indicate excessive loss of bushing metal and engine must be removed as a precautionary measure.

g. Additional Metal Particles Test . This test is made to subject engine to sufficient operations to cause any additional metal in oil system to collect on oil screen and in main sump and also to reveal any Incipient trouble. This additional metal will determine whether engine needs to be removed or allowed to continue In service Test using the following procedures.

(1) Drain and flush external oil system

(2) Run engine to bring it to operating temperatures and make a minimum of three power checks (Allow engine to cool between checks). Take care not to exceed allowable limits for ground operation.

(3) Again remove oil screens and examine for metal accumulation. Examine main sump plug and screen for metal accumulation. If engine is released for service, it must be watched closely for next 25 hours for any indications of malfunctions or internal failure.

h. Excessive Spark Plug Copper or Silver Runout . If copper runout is noted, replace cylinder from which spark plug was removed as this Indicates the cylinder temperature has exceeded 1981 °F (1083 °C). Silver runout may be caused on a fine wire electrode-type spark plug if plug is subjected to pre-ignition and/or detonation. Excessive temperature may cause the silver spindle of the center electrode to flow toward the firing end of the electrode. Copper or silver runout indicates affected cylinders should be replaced. Engines having runout on more than 25 percent of the cylinders should be removed.

i. *Low Cylinder Compression*. Prior to removing cylinders for low compression, check and adjust valve clearance. Check cylinder compression. Replace cylinder when compression is less than established limits.

j. *Parts Failure*. When some portion of a steel part, such as a piston ring, valve, valve spring, washer, rocker arm, or rocker arm bearing cannot be located and removed, the engine will be replaced, so other parts within the engine will not be damaged.

k. *Basic Mechanical Failure*. Remove engine when any internal component such as impeller, boss, casting, propeller shaft, or studs, become cracked, nicked, broken, or damaged to the extent that safe operation cannot be continued. Failures of this type are limited to Internal components of the engine such as impeller, Impeller clutch, crankshaft, supercharger housing, and reduction gear housing, since external failures, such as cylinders or engine accessories, can be corrected by replacing the unserviceable assembly.

I. *Engine Overspeed*. When engine speeds exceed limits specified in the applicable maintenance manual, the removal or inspection of the engine will be dependent upon the amount of overspeed reported. When engine speeds exceed limits, accomplish the following procedures.

(1) When overspeed is above maximum rpm, replace engine.

(2) When overspeed is below maximum rpm, accomplish the following:

(a) Examine engine for cracked, open, or broken cylinder heads and barrels, and bent push rod housing.

NOTE

In the event a cylinder head is cracked or broken and no particles of pistons rings have entered crankcase of engine (determined by Inspection of magnetic sump plug or oil screen for metal), remove damaged cylinder and piston and examine articulating and master rods for misalignment. If rods are satisfactory, replace cylinder and piston assembly with a serviceable unit and continue engine in service as specified below.

(b) Examine oil system. When examination of oil screens or filters discloses an abnormal amount of metal particles, remove engine. When no metal particles are found, operate engine as specified.

(c) When examination of engine discloses no visible damage as a result of overspeeding, restrict aircraft to local flights for a period of 10 hours.

m. *Excessive Manifold Pressure*. Engines incorporating turbosuperchargers or auxiliary stage superchargers are subject to excessive manifold pressure when automatic controls malfunction or fall. A manifold pressure overboost control is usually employed to reduce the possibility of overboost occurring. However, when overboost occurs, combustion temperatures rise, and detonation or pre-ignition may result and cause serious structural damage to the engine. When manifold pressure exceeds value specified in the flight manual, it Is considered an overboost condition and the engine will be removed.

n. *Excessive Maintenance*. If an aircraft engine requires consistent excessive maintenance or is a definite hazard to flight, it should be replaced, provided complete engine conditioning will not correct the difficulty. Excessive and consistent oil fouling of spark plugs could cause excessive maintenance. However, if fouling is limited to certain cylinders, the difficulty may be eliminated by replacing defective cylinders, ignition leads, distributor block, or opening-clogged rocker box drains.

o. *Excessive Oil Consumption*. Oil is consumed in the engine by being burned in the combustion chamber, lost in the form of mist or vapor from the breather, or leakage where propeller shafts and other shafts protrude from the crankcase. Consumption varies with engine power setting, however, one or more cylinders fouling due to excessive oil consumption may call for cylinder rather than engine change.

(1) Oil consumption. Some of the factors which affect oil consumption are engine speed, temperature, wear condition, and lubricant characteristics such as viscosity-temperature coefficient, volatility, and flash point. Each is explained in the following paragraphs.

(a) Engine speed. The most important factor affecting oil consumption normally is engine speed. oil pressure Increases with engine speed until the , operating range pressure of the engine is reached, then a pressure relief valve maintains a constant pressure. Usually, maximum pressure is reached at relatively low speeds. The effect of engine speed on oil

pressure between pump and main bearing is negligible. However, centrifugal force increases oil pressure at crankpins which increases flow through the bearings and sprays more oil on cylinder walls. The rings do not follow the cylinder as closely at higher speeds, and a greater amount of oil Is passed to the combustion chamber instead of being scraped back to the crankcase.

(b) Engine temperature . High engine temperature and low oil viscosity tend to increase losses of oil from crankcase seals and breathers. Oil loss increases due to increased blowby, or gas flow, past piston rings at higher engine speeds. Blowby raises crankcase pressure and forces oil or oil vapor out of the crankcase.

(c) Engine wear . Engine wear in the form of worn bearings increases clearance and allows increased oil loss. Worn pistons and cylinders provide space for thicker oil films and increase loss due to failure of rings to seal.

(d) Lubricant characteristics. An increase in oil viscosity decreases oil consumption only up to the point at which the slower draining of the more viscous oil from the cylinder wall, and tendency of the rings to ride over the oil film causes more oil to pass the piston and flow into the combustion chamber.

(2) Aircraft range as related to oil consumption. Remove an engine if oil consumption is high enough to limit range of aircraft. Variations In oil system capacity of different aircraft causes maximum oil consumption to vary according to type aircraft and type of mission being performed (see figure 7-22).

7-6. Engine Conditioning. Engine conditioning provides a standard method for detecting engine malfunctioning prior to development of serious trouble and establishes a systematic routine for keeping the engine in condition to provide maximum trouble-free performance. The types of engine conditioning are complete engine conditioning and minor engine conditioning.

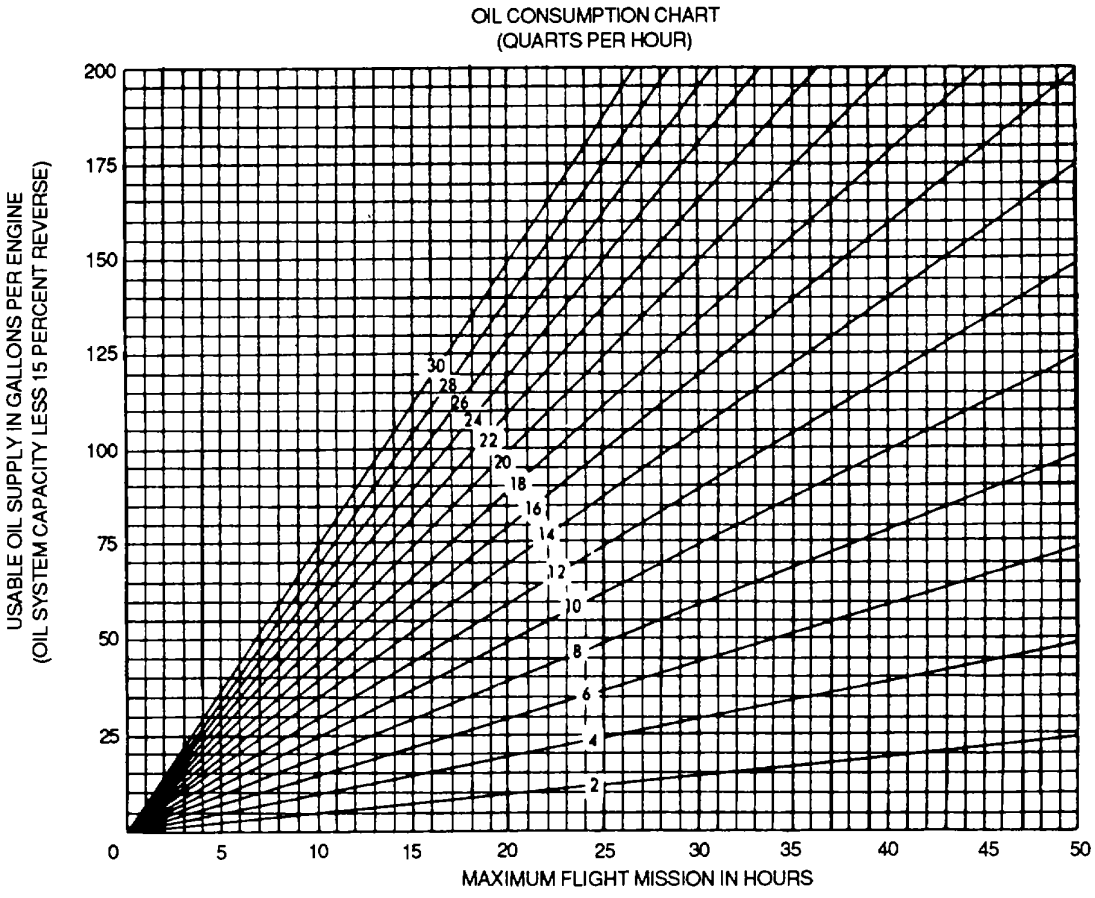

Figure 7-22. Oil Consumption Chart

a. Complete Engine Conditioning. Complete engine conditioning is a complete investigation of the condition of an engine and correction of any difficulty detected. Complete engine conditioning will be given engines being overhauled with the exception of idle mixture and speed, fuel, oil, and water pressure adjustments, and final check and adjustment of the engine after the engine is installed on the aircraft. Perform this conditioning using the instructions contained in table 7-2..

b. Minor Engine Conditioning. Minor engine conditioning is the investigation and correction of any malfunction revealed during flight or through the cockpit checks (daily, intermediate, and complete cockpit checks). Perform the following procedures for minor engine conditioning:

(1) Perform a complete cockpit check (steps 6 through 14, table 7-2) when a new engine is installed, when an aircraft is removed from storage, at each major and minor inspection, and when minor conditioning fails to correct a malfunction. The engine cockpit check will be handled in the following manner:

(a) Record all readings on cockpit check sheet as shown in figure 7-23.

(b) File form in aircraft flight log folder for future reference by both maintenance and flight personnel.

NOTE

The daily check will be carried out by the air crew and will only be recorded in the flight log when performance is unsatisfactory. The serviceability of the engine is established by the air crew by comparing its readings against those recorded on the complete cockpit check made by the maintenance crew.

(2) Perform steps 6 through 13, 15, and 17, table 7-2.

(3) Perform intermediate check after last flight of day. The check may be made any time after the last flight of the day and before the next flight by either the air crew or maintenance personnel. Any difficulties encountered during flight are corrected at this time. The intermediate check is outlined in steps 12 through 15 and 17, table 7-2. The readings obtained are recorded in the flight log only when engine performance is unsatisfactory.

7-7. AIR INDUCTION SYSTEM. The air induction system supplies air to the carburetor or master control. It forms a long curved channel which conducts air and fuel-air mixture to the supercharger section. The channel consists of an air scoop, temperature controlling device, and a thermometer. General maintenance procedures are explained in the following paragraphs.

a. Inspection, Maintenance, Cleaning, and Replacement. Perform the following procedures for general inspection, maintenance, cleaning, and replacement of air induction system components:

(1) Check induction system for foreign matter and articles to prevent such items from damaging impeller or clogging air passages.

(2) Install flexible channel, joining certain types of induction systems together, in such a manner to prevent flexible channel from being sucked down and restricting air flow.

(3) Correct leaks in induction systems soon as possible after detection, as fuel-air mixture will be adversely affected.

(4) Clean air filters at intervals specified in applicable maintenance manual using the following procedures:

WARNING

Degreasing Solvent, MIL-PRF-680, is combustible and toxic to eyes, skin, and respiratory tract. Wear protective gloves and goggles/face shield. Avoid repeated or prolonged contact. Use only in well ventilated areas (or use approved respirator as determined by local safety/industrial hygiene personnel). Keep away from open flames or other sources of ignition.

(a) Immerse filter in degreasing solvent, MIL-PRF-680, and agitate to remove all imbedded dirt particles.

(b) Drain by placing on a 25-degree angle draining rack and allowing to dry thoroughly.

(c) When completely dry, immerse filter in a mixture of 1 part corrosion-preventive compound, MIL-C-5545, and three parts lubricating oil, MIL-L-6082, Grade 1120, at a temperature of 70°F (21°C) for 2 to 5 minutes.

Table 7-2. Engine Conditioning Table

Complete conditioning steps	Procedure	When performed	Personnel responsible
Step 1. Ignition System Timing.	Time all phases of ignition. This includes breaker point-to-magneto timing, magneto-to-engine timing, and, distributor finger-to-engine timing.	Complete Conditioning	Maintenance
Step 2 Compression Test	Test cylinder compression.	Complete Conditioning	Maintenance
Step 3. Valve Adjustment	Check valves and adjust clearances if necessary. Visually inspect valve mechanism.	Complete Conditioning	Maintenance
Step 4. Ignition Harness Check	Check Ignition harness for high voltage leakage.	Complete Conditioning	Maintenance
Step 5. Spark Plug Installation	Install new or reconditioned set of spark plugs.	Complete Conditioning	Maintenance
Step 6. Check for Hydraulic Lock	Pull propeller through to determine whether combustion chambers are clear.	Complete Conditioning	Maintenance
		Cockpit Check	Air Crew
		Daily Check	Air Crew
Step 7. Blowby Check	While performing step 6, listen for an extended hissing sound from exhaust stack or stacks.	Complete Conditioning	Maintenance
		Cockpit Check	Air Crew
		Daily Check	Air Crew
Step 8. Engine Start	Start engine.	Complete Conditioning	Maintenance
		Cockpit Check	Air Crew
		Daily Check	Air Crew

Table 7-2. Engine Conditioning - CONT

Complete conditioning steps	Procedure	When performed	Personnel responsible
Step 9. Engine Warmup	Warm up engine at smoothest specified rpm, oil pressure permitting. Continue warmup until normal operating temperatures are obtained as Indicated by green arc on gauges.	Complete Conditioning	Maintenance
		Cockpit Check	Air Crew
		Daily Check	Air Crew
Step 10. Power Check	Set engine at specified rpm setting. Allow engine and instruments to stabilize.	Complete Conditioning	Maintenance
	Manifold pressure readings for different engines of the same type and model installed on the same type aircraft should not vary over 1 inch Hg at a given rpm when checks are performed at the same geographical location.	Cockpit Check	Air Crew
		Daily Check	Air Crew
	A higher than normal manifold pressure indicates engine is not operating properly.		
	In case of high manifold pressure, take manifold pressure readings at several lower rpm settings to establish rpm manifold pressure pattern for engine. See performance chart for rpm-manifold pressure relationships for current aircraft.		
Step 11. Ignition System Check	After completing step 10, perform step 17.	Complete Conditioning	Maintenance
		Cockpit Check	Air Crew
		Daily Check	Air Crew
Step 12. Cruising Mixture Check	Set engine speed at rpm specified In performance chart with mixture control in AUTO-RICH position. After engine and instruments have stabilized, move mixture control to AUTO-LEAN and observe rpm change. Return mixture control to AUTO-RICH position. A change of rpm, other than that allowed in performance chart, indicates an excessively rich or lean carburetor or master control or fuel Injection lines leaking.	Complete Conditioning	Maintenance
		Cockpit Check	Air Crew
		Daily Check	Air Crew

Figure 7-2. Engine Conditioning - CONT

Complete conditioning steps	Procedure	When performed	Personnel responsible
Step 12. Cruising Mixture Check - continued	Check valve for nozzle not holding, pumps not synchronized, vapor vents stuck, low cylinder head temperature, or improper spark plug gap. On carburetor engine, idle adjustment will cause rich or lean mixture.		
Step 13. Idle Speed Check	Close throttle completely. Engine should idle at specified rpm and cylinder head temperature of 150 to 170°C (302 to 338°F) if equipped with individual exhaust stacks or at lower specified rpm if equipped with an exhaust collector ring.	Complete Conditioning	Maintenance
		Cockpit Check	Air Crew
		Daily Check	Air Crew
		Intermediate	Air Crew or Maintenance
Step 14. Idle Mixture Check	Check Idle mixture and adjust mixture and speed.	Complete Conditioning	Maintenance
		Cockpit Check	Air Crew
		Intermediate	Air Crew or Maintenance
Step 15. Acceleration and Deceleration Check	Perform acceleration and deceleration checks. If turbosupercharger is installed, check with turbosupercharger off.	Complete Conditioning	Maintenance
		Cockpit Check	Air Crew
		Daily Check	Air Crew
		Intermediate	Air Crew or Maintenance
Step 16. Engine Backfire Test	Because of the nature of this test, It should be conducted only after prescribed Inspection periods or when trouble is encountered. Conduct test with cylinder head temperatures not less than 180°C (356°F) and not more than maximum allowable for engine involved.	Complete Conditioning	Maintenance

Table 7-2. Engine Conditioning - CONT

Complete conditioning steps	Procedure	When performed	Personnel responsible
Step 16. Engine Backfire Test - continued	Place turbosupercharger in OFF position. Carburetor air filters should be by passed. Set engine at specified rpm setting. Move carburetor mixture control to AUTO-LEAN. Move ignition switch from BOTH to RIGHT and then to LEFT for a sufficient length of time in each position to permit engine operation to stabilize. When moving ignition switch from BOTH TO RIGHT or LEFT, a high rmp drop will normally occur. If the engine does not backfire from either switch position, it is considered satisfactory in this test. If it backfires, one or more phases of engine operation are not correct.		
Step 17. Ignition Switch Check	Set engine speed at specified rpm Momentarily move Ignition switch to OFF and determine that engine completely ceases firing. Return switch to BOTH as rapidly as possible to eliminate possibility of backfiring. Check master switch same way.	Complete Conditioning Daily Check Intermediate	Maintenance Air Crew Air Crew or Maintenance
Step 18. Spark Plug Check	Make cold cylinder check. Replace only defective plugs and repeat steps 6 through 16.	Complete Conditioning	Maintenance

ENGINE CONDITIONING COCKPIT CHECK SHEET						
DATE			TESTED BY			
AIRCRAFT SERIAL NUMBER	ENGINE SERIAL NUMBER		POSITION NUMBER	CALIBRATED MP FACTOR		
1 PRE-START						
A VAPOR PRESSURE			E STATIC MANIFOLD PRESSURE READING			
B OUTSIDE AIR TEMPERATURE			F CALIBRATED TORQUE OIL PRESSURE			
C WIND VELOCITY			G CHARTED AVAILABLE HORSE POWER			
D DESIRED POWER CHECK RPM			H FUEL FEED VALVE CHECK			
2 ENGINE START AND WARM-UP						
A IN ACCORDANCE WITH EXISTING DIRECTIVES						
3 POWER CHECK						
A RPM	B MANIFOLD PRESSURE	C TOP	D CAT	E FUEL FLOW	F CHT	
4 IGNITION SYSTEM CHECK						
RIGHT MAGNETO			LEFT MAGNETO			
A RPM DROP FAST_____SLOW_____TOTAL_____			D RPM DROP FAST_____SLOW_____TOTAL_____			
B RPM OR TOP DROP R1 R2			E RPM OR TOP DROP L1 L2			
C INDIVIDUAL CHECK 1_____2_____3_____4_____5_____6_____7_____			F INDIVIDUAL CHECK 1_____2_____3_____4_____5_____6_____7_____			
5 ACCELERATION CHECK						
A RICH			B NORMAL			
6 FULL THROTTLE CHECK						
A RPM	B MANIFOLD PRESSURE	C TOP	WET	D FUEL FLOW	WET	
			DRY		DRY	
7 CRUISE MIXTURE CHECK						
A RPM CHANGE INCREASE DECREASE						
8 IDLE SPEED AND IDLE MIXTURE						
A IDLE SPEED	B MANIFOLD PRESSURE		C IDLE MIXTURE			
9 IGNITION SWITCH GROUNDING CHECK						
A IGNITION SWITCH GROUNDED						

Figure 7-23. Engine Conditioning Cockpit Check Sheet

(d) Place filter on a 25-degree angle draining rack in a room where temperature is 70°F (21°C) and allow to drain for 2 to 4 hours. Drain accordion-pleated filters for 8 hours.

(e) When necessary, use forced draining after gravity draining has been accomplished by using a 1/16-inch orifice and 100 psi air temperature.

(5) Adjust carburetor air doors so they operate freely through full range of travel or to position selected as specified in applicable maintenance manual.

(6) Replace damaged intake pipes. Detect leaks in Intake pipes by presence of fuel stains at cylinder Impeller end When leakage is found after 25 hours of operation (since new), loosen intake pipe packing nuts. Replace any defective packing and retighten nuts.

NOTE

Do not tighten packing nuts without loosening and examining the packing first.

b. *Turbocharger and Supercharger Maintenance* . Visual inspection of all visible parts should be accomplished daily to observe oil leaks, exhaust leaks, cracks in the metal of hot sections, loose or insecure units, and other unacceptable conditions. Refer to the applicable maintenance manual for specific maintenance procedures. Ensure the following Items are checked.

- Mounting of all units
- Oil leaks or dripping from any unit
- Security of oil lines
- Security and condition of electric wiring
- Cracks in ducting and other metal parts including the turbine and housing
- Warping of metal ducts
- Operation of the complete system to determine performance to discover undesirable sounds, and to note evidence of vibration; unusual sounds and appreciable vibration require removal and replacement of the turbocharger to correct the faulty condition.

NOTE

Exhaust ducts, waste gates, nozzle boxes, and turbines are subjected to extremely high temperatures. For this reason, cracks develop because of the continued expansion and contraction of the metal as temperature changes occur.

7-8. Exhaust System . The exhaust system conducts exhaust gases from the engine to the atmosphere with minimum exhaust back pressure. Short exhaust stacks are incorporated on some engines, while others join a collector ring which expels exhaust gases through a tail pipe. Perform the following general maintenance procedures on exhaust systems:

a. Check ball joints for excessive or insufficient clearances, and retighten or replace ball joints as necessary to obtain free movement.

b. Replace all parts that have hot spots or damage beyond repair.

c. To prevent exhaust port studs from seizing, and to retard corrosion, apply a special lubricant as follows:

(1) When engine or cylinder is removed or installed, apply light coating of 10 percent molybdenum disulphide lubricant, MIL-M-7866, and 90 percent grease, MIL-G-3545, to threads of cylinder exhaust port studs.

(2) To retard corrosion of nuts, apply this mixture to exterior of exhaust port stud nuts.

d. Tighten all nuts, bolts, and clamps in exhaust system in accordance with maintenance manual for engine involved.

7-9. Carburetion and Fuel Injection . Fuel is metered to the engine at a predetermined ratio to airflow by the fuel metering system. Fuel metering systems differ in design, but their function is the same, regardless of type or engine model. Improper maintenance of the fuel metering system will result in rough engine performance, detonation, spark plug fouling, low power output, poor acceleration, and engine or part failure.

a. *Inspection*. Inspect carburetors for mounting flange cracks and evidence of leakage and fuel strainers for foreign matter broken screens, corrosion, and distortion.

b. Depreservation. Carburetors are depreserved to make them operational after they have been preserved for extended storage. Observe the following precautions:

- Depreserve f oat-type carburetors which do not employ diaphragms by f ushing f oat chamber with the type of fuel used to operate applicable engine, then drain oil and fuel mixture from f oat chamber. Flush until all trace of preservative oil is removed.
- Depreserve diaphragm-type carburetors by draining oil from fuel chambers and passages and f ushing with fuel. Fill carburetor with type of fuel to be used to operate applicable engine. Soak diaphragm for at least 8 hours. This restores fuel diaphragms to normal operating condition.

c. Adjusting Idle Mixture and Idles Speed. If an engine will not respond to idle mixture and speed adjustment, it is an indication that some other phase of engine operation is incorrect. Adjust idle mixture and idle speed using the following procedures:

(1) Make idle mixture adjustments with oil and cylinder head temperatures at normal values.

(2) Back idle speed stop off so that idle speed is controlled during adjusting procedure by manually controlling throttle.

(3) Retard throttle to designated rpm.

(4) Screw idle mixture in or out in small increments as required until proper idle mixture is established.

(5) After each idle mixture adjustment, increase power to f eld barometric pressure for approximately 1 minute to clean intermittent f ring spark plugs caused by excessively rich or lean mixture.

(6) Set idle speed stop to desired rpm.

d. Repair or Replacement. Repair or replace carburetor using the following procedures:

(1) When improper operation of f oat-type carburetor is suspected, perform a test by manually leaning mixture with mixture control or by enriching mixture by use of primer. Replace complete unit when changes in rpm, other than those within allowable limits, resuit.

(2) When diff culty is encountered with PD and PR series injection-type carburetors, attributed to sticking or binding of automatic mixture control unit, clean unit as follows:

WARNING

Degreasing Solvent, MIL-PRF-680, is combustible and toxic to eyes, skin, and respiratory tract. Wear protective gloves and goggles/face shield. Avoid repeated or prolonged contact. Use only in well ventilated areas (or use approved respirator as determined by local safety/industrial hygiene personnel). Keep away from open f ames or other sources of ignition.

(a) Remove unit from carburetor, being careful not to remove seal or lockwire or loosen siphon locking nut.

(b) Wash bushing with Degreasing Solvent, Mil-PRF-680.

(c) Dry thoroughly with compressed air.

(d) Polish bushing sleeve with crocus cloth, Federal Specif cation P-C-458, until it is bright.

(e) Blow out any polishing dust that tends to cling to inside walls.

WARNING

DELETED

(f) Clean needle with dry Degreasing Solvent, MIL-PRF-680, and dry with compressed air.

(g) When needle is corroded, clean with Degreasing Solvent, MIL-PRF-680, dry with compressed air, polish with crocus cloth, Federal Specif cation P-C-458, and lubricate with grease molybdenum disulf de MIL-G-21164.

(h) Reassemble and install lockwire or seal, if broken.

(3) All components of PS series injection type carburetor are self-contained In one assembly. Any difficulty that cannot be corrected by adjusting idle mixture or speed or unplugging vapor bleed requires replacement of carburetor.

e. *Preservation*. When carburetors are removed for placement of storage or for rework, they should be preserved using the following procedures:

CAUTION

Exercise care to keep the preservative oil out of the air chambers of the regulator unit, and from contacting the air metering portion of the carburetor, including the main venturi, impact tubes, and automatic mixture control. Damage to carburetor may otherwise result.

(1) Remove drain plugs from bottom of fuel chamber on float-type carburetors and drain out all fuel. With drain plugs reinstalled, fill float chamber with lubricating oil, MIL-L-6081, Grade 1010.

(2) Drain fuel and air chambers and fuel control unit by removing drain plugs on PD and PR series Injection-type carburetors Replace plugs to air chambers and inject lubricating oil, MIL-L-6081, Grade 1010, (under 10 to 15 psi regulated pressure) until fuel outlet on fuel control unit shows oil seepage. Remove drain plugs and allow excess oil to drain out. Reinstall drain plugs.

(3) Remove drain plugs from main fuel chamber on PS series Injection-type carburetors and force lubricating oil, MIL-L-6081, Grade 1010, into fuel inlet at 8 to 10 psi until oil seeps from fuel discharge nozzle. Remove drain plug on bottom of main regulator assembly and allow all excess oil to drain. Reinstall drain plug.

f. Installation. Install carburetors using the following procedures.

(1) Remove all burrs and gasket particles from carburetor and engine mating surfaces.

(2) Cover fuel lines, subject to contamination by foreign matter, with masking tape, Federal Specification PPP-T-42.

(3) Place carburetor on engine, close and secure throttle valves in closed position with lockwire.

(4) Connect all lines.

(5) Tighten mounting bolts in accordance with limits specified in maintenance manual.

(6) Tighten and lockwire all other nuts and bolts.

(7) Check throttle and mixture control lever for freedom of movement; connect linkage.

(8) Remove lockwire from throttle valves.

(9) Ensure that vapor vent lines are free from obstructions.

7-10. Removal and Installation of Reciprocating Engines. Preparation for removal, preparation for installation, and installation of reciprocating engines are explained In the following paragraphs.

a. *Preparation for Removal.* The following preparations should be made prior to removing engines:

(1) Provide personnel with maintenance manual, aircraft log book, and, when applicable, DA Form 2410.

(2) Provide proper special tools, hoist, and engine stand for engine as given in maintenance manual. Provide ground support equipment and hand tools.

(3) Provide working area with drip pans, fire extinguishers, and NO SMOKING signs. Provide oily waste cans, Federal Specifications RR-C-114, for storage of all rags used for cleaning engine components and wiping up fuel and oil.

(4) Ensure that aircraft is properly grounded and choked and battery is disconnected Remove necessary cowling.

b. *Removal*. Remove engine from the aircraft In accordance with basic instructions given herein and in the specific engine maintenance manual.

(1) Preserve engine in accordance with paragraph 7-12..

(2) Disconnect all control rods and cables, magneto conduits, fuel and oil lines, thermometer tubes, tachometer shafts or wires, and like connections.

(3) Remove propeller, or clean propeller control systems, depending on condition or time in service.

(4) Drain fuel from metering system and connecting lines to eliminate fuel spillage during removal.

(5) Remove remote fuel pump adapters, propeller hub attaching parts, starters, ignition analyzer synchronizer, generators, vacuum pumps, air pumps, hydraulic pumps, propeller governors, and engine driven fuel pump.

(6) Forward engine accessories to depot in separate containers.

(7) Install cover plates and plugs in engine and accessory openings. Plug or cap all lines disconnected to accomplish engine removal.

(8) Review TB 55-1500-328-25 for determination of accessories to accompany engine.

(9)Lubricate exhaust port studs and nuts.

c. *Preparation for installation.* In addition to the preparations outlined in paragraph a, the following examinations must be made prior to Installation.

(1) Examine any fuel, oil, or hydraulic lines for serviceability Particular emphasis should be given to all lines that run through firewall.

(2) Ensure that all disconnected lines, hoses, control rods, cables, and wiring on firewall are In appropriate position required for connection to engine.

d. *Installation*. Procedures to be followed in installing the engine will vary according to type of engine and aircraft involved and whether or not a power package is used. The general procedure contained herein and in the specific engine maintenance manual will apply.

(1) Swing engine into po sition with a suitable hoist and Install engine mounting bolts. Tighten mounting bolts to specified torque value.

(2) Connect magneto ground wire, install properly prepared carburetor, and connect fuel lines.

(3) Attach main oil line to oil pump Inlet, then connect oil scavenge line, oil tank vent line, oil pressure gauge line, and any other required oil lines.

(4) Connect and adjust throttle control and carburetor air heater control.

(5) Install and adjust propeller governor and control.

(6) Install propeller. Tighten retaining nut to specified torque value.

(7) Connect, check, and safety any other lines and controls which are required on the aircraft.

(8) Accomplish depreservation run in accordance with paragraph 7-13.

(9) Lubricate exhaust port studs and nuts.

7-11. Engine Mounting Systems. The engine mounting system consists primarily of an engine mount and vibration dampers. The basic engine mount consists of a welded chrome-molybdenum steel tubing structure rigid enough to carry forces Imposed by the engine. Vibration Isolators or dampers are used to eliminate the transmission of excessive vibration from the engine to the aircraft structure. Perform the following procedures for general maintenance of engine mounting systems.

a. Visually inspect engine mounting system in accordance with applicable Inspection requirements manual.

NOTE

When rubber parts of Isolators must be cleaned to establish their physical condition, use soap, A-A-50, and water only.

b. Repair of engine mounti ng system is limited to the following steps.

(1) Repair distorted, bent, cracked, or chafed areas.

NOTE
Excessive damage requires replacement.

(2) Tighten loose mountings to obtain torque values specified In maintenance manual.

(3) Repair or replace vibration isolators that show any evidence of radial slippage.

(4) Properly secure all engine mount retaining bolts with safety wire.

(5) Replace vibration isolators when metal or rubber parts indicate sagging or deterioration.

7-12. Preservation of Reciprocating Engines . Corrosion of aircraft metals and alloys is primarily a light against moisture. There are two main types of surface corrosion, direct chemical attack on metal, and electrochemical action In which the metal being corroded becomes a part of an electrolytic cell In the presence of moisture. Both reactions are effectively retarded In the absence of moisture. Corrosion will not occur in a clean atmosphere when moisture is not permitted to reach the metal surface. Preserve reciprocating engines using the following paragraphs.

a. *Preservation of Accident-Involved Engines* . Engines removed from an aircraft that has been involved in an accident In which engine failure or malfunction Is known or suspected to have been a factor should not be treated with corrosion protective. No attempt should be made to operate, motor, or disassemble an accident-involved engine. All accident involved engine must be transported to an overhaul depot or a designated investigation area within 10 days after the accident. The accident-involved engine shall be preserved using the following procedures.

(1) Without disconnecting lines or fittings, make every effort to prevent remaining fuel and oil In engines from leaking out.

(2) Plug all ports and cap all fittings and lines. Seal openings with applicable covers.

(3) Install engine in bottom half of metal, reusable shipping and storage container.

(4) Ground engine to container to prevent a possible explosion of dangerous vapors which may be ignited by static electricity or a spark.

(5) Secure all loose metal components to the container with tape, PPP-T-60, to prevent a possible spark during shipment.

b. *Preservation of Operable Engines to be removed for Overhaul.* Engines to be removed from aircraft for overhaul, that can be operated without further damaging the engine or any of its parts, shall be preserved using the following procedures

CAUTION
While injecting the preservation compound, be sure none of the compound is injected into airstream of the carburetor or master control. Do not inject the compound upstream of the throttle valve. Damage may otherwise result.

(1) Drain oil system and refill with corrosion preventive MIL-C-6529, Type II.

NOTE
Type II corrosion preventive consists of a ready mixed blend of 1 part corrosion preventive, MIL-C-6529, Type 1 and 3 parts new lubricating oil, MIL-L-6082, Grade 1100.

(2) Prior to starting engine for final run, connect discharge nozzle.

NOTE
Discharge nozzles shall conform to designs set forth in figure 7-24 and be modified in length and thread configuration to suit engine type and point of application.

(3) Locate nozzle in a position so that corrosion preventive mixture Is properly distributed to all cylinders. Modify nozzle discharge are to provide sufficient restriction to prevent exhausting corrosion preventive supply prior to cessation of engine rotation.

NOTE
For radial engines, precautions shall be taken to ensure that the quantity of mixture aspired and the location employed provides an even amount of coating for both upper and lower cylinders.

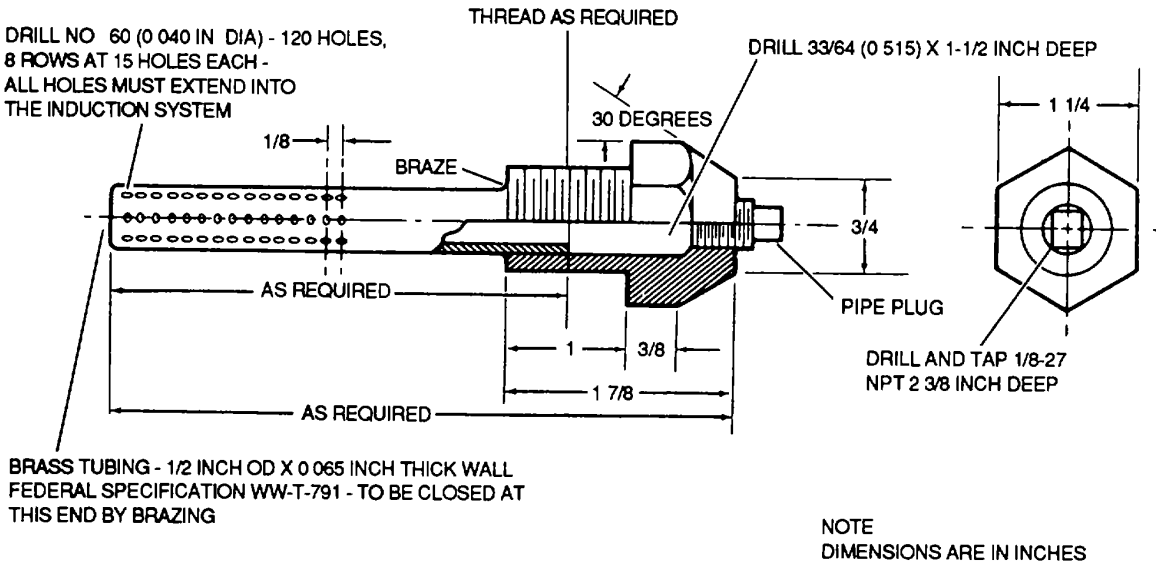

Figure 7-24. Discharge Nozzle for Corrosion Preventive Mixture

(4) Thermostatically control corrosion preventive supply tank to maintain corrosion preventive, MIL-C-6529, Type II at a temperature of 221 to 250°F (105 to 121 C).

(5) Connect an air pressure line providing 60 to 80 psi dry compressed air to the tank Mixture capacity of the tank will be as follows:

- One quart for engines up to 1340 cubic inch displacement.
- Two quarts for engines up to and including 2000 cubic inch displacement.
- Three quarts for engines up to 3350 cubic inch displacement.

(6) Make final engine run with oil system serviced with corrosion preventive as follows:

CAUTION

At no time will engine be operated in excess of 1500 rpm while the oil system Is serviced with corrosion preventive mixture. Damage may otherwise result.

(a) Operate engine on service fuel for a period of 15 minutes.

(b) With engine operating at 1500 rpm, release corrosion preventive mixture through nozzle. As soon as white smoke appears at upper cylinder exhaust stacks for radial engines and at all stacks for opposed engines, move mixture control to IDLE CUT-OFF position and allow engine to stop. Continue aspiration of mixture until engine ceases to fire.

(7) Drain preservation mixture from oil system while engine Is warm, exercising care to keep corrosion preventive mixture clean for future use.

(8) Clean filter and screen and coat with corrosion preventive mixture and reinstall.

(9) When rocker box covers have been removed for any reason, rocker box interior shall be treated as follows:

(a) Drain oil from each rocker box from which cover is removed.

(b) Spray-coat rocker arms, valve stems, springs, push rods, rocker box covers, and rocker boxes with corrosion preventive, ML-C-16173, Grade 2.

(c) Reinstall covers with new gaskets and tighten holddown nuts to values specified in applicable engine maintenance manual.

NOTE
The above rocker box preservation procedures are mandatory for all 0.435 series engines.

(10) Spray interior of each cylinder with corrosion preventive, MIL-C-6529, Type II maintained at a temperature of 221 to 2500F (105 to 121 °C). Spray as follows:

(a) Spraying shall be accomplished with piston at bottom dead center. Spray cylinders in sequence of firing order. Continue in this manner until all cylinders are sprayed.

CAUTION
The crankshaft must not rotate after final spraying as preservation coating will be scraped from cylinder walls.

(b) Final-spray cylinders without rotating crankshaft.

(c) Install cylinder dehydrator plugs, MIL-1-6131, Type II, In each spark plug opening.

(11) Spray interior of exhaust ports and seal Individuals ports with applicable exhaust port plug.

(12) Preserve carburetors in accordance with approved preservation procedures.

(13) Remove th rust bearing cover plate and spray-coat bearing with corrosion preventive, MIL-C-6529, Type II Reinstall cover.

(14) Coat exposed propeller shaft with corrosion preventive, MIL-C-16173, Grade 2 wrap propeller shaft with barrier material, and MIL-B-121, Grade A, when applicable plastic cylinder protector is not available.

(15) Seal oil line fittings with plugs conforming to MIL-C-5501.

(16) Remove cover plates from all accessory drives and spray-coat all drives with corrosion-preventive, MIL-C-6529, Type II. Reinstall all cover plates.

(17) Seal breather openings with oil and moisture-resistant covers, dehydrator plugs, or pressure sensitive tape, Federal Specification PPT-60.

(18) Perform dehydration of Intake manifold as follows:

(a) Secure carburetor throttle valve In open position with lockwire.

(b) Install one 16-unit bag of desiccant, MIL-D-3464, in intake.

(c) Seal openings with moisture-resistant covers or barrier material, MIL-B-121, Grade A, secured with pressure sensitive tape, Federal Specification PPP-T-60.

CAUTION
Do not turn protective cap during installation or removal as damage may occur to contact spring.

(19) Protect spark plug lead terminals by installing applicable protective cap.

(20) Preserve magnetos by applying oil to cam, spring, and other steel parts. Seal all external openings with pressure sensitive tape, Federal Specification PPP-T-60.

NOTE
Keep oil from breaker points.

(21) Install a crankcase dehydrator plug.

(22) Install engine in a metal shipping container as follows:

(a) Place preserved engine in a serviceable container in accordance with instructions supplied with container.

(b) Close container and tighten closure bolts to proper torque.

CAUTION

Use only dehydrated air with a maximum relative humidity of 30 percent for pressurizing shipping containers in order to keep humidity as low as possible in the air surrounding the engine.

(c) Pressurize container to 5 psi with dehydrated air.

(d) Retighten engine container flange nuts to original torque after 1 hour elapsed time.

(e) After container has been pressurized, use soapy water to check for leaks If a second pressure check in 24 hours does not Indicate a leak, engine is ready for storage or shipment.

(f) Maintain all markings and stencils on shipping container intact without additions or deletions.

c. Preservation of Inoperable Engines. Engines that cannot be operated and are to be removed from aircraft shall be treated as far as practicable as shown in paragraph 7-11 b. Spray all possible interior surfaces, as the engine will be shipped or stored without the protection afforded It by a final operation using a corrosion-preventive compound in the lubrication system. An appropriate entry shall be made on DA Form 2408-16 and DD Form 1577-2, stating Inability to accomplish preservation run of the engine DA Form 2408-5 also will be sent with the, engine, if applicable DA Form 2410 will be completed and mailed in accordance with DA PAM 738-751.

d. Intermediate Storage of Engines Mounted on Aircraft. Intermediate storage shall be completed within 24 hours after ground runup. When it is not definitely known that the aircraft will be operated within 45 days, the engine shall be preserved for intermediate storage and an entry shall be made on the applicable DA Form 2408 series stating this work has been accomplished. The procedure for Intermediate storage is the same as previously outlined in paragraph 7-11b with the following additional procedures.

(1) Drain fuel from engine-driven fuel pump and flush interior with lubricating oil, MIL-L-6081, grade 1010, while rotating engine crank-shaft. Seal fuel lines with suitable plugs.

CAUTION

Use dehydrated air with a relative humidity of 30 percent for all spraying operations. Damage may otherwise result.

(2) Spray exhaust valves with corrosion preventive, MIL-C-6529, Type II Spraying shall be through exhaust port with exhaust valves fully open.

NOTE

Engines with collector rings may be sprayed through spark plug ports with exhaust valves fully open.

(3) Place and secure two 8-unit bags of desiccant, Military Specification MIL-D-3464, in carburetor air intake scoop or carburetor adapter.

(4) Cover open end of scoop with a suitable anchored, barrier paper, MIL-B-131.

(5) Firmly attach a red cloth streamer to bags containing desiccant and bring loose end out In such a manner that not less than 18 inches of cloth streamer will be visible on outside of carburetor air Intake scoop. In order to prevent streamer from action as a wick, a 3- to 4-inch length of lockwire shall be left between streamer and desiccant.

(6) Install 16 units of desiccant, MIL-D-3464, in exhaust outlet on engines incorporating an exhaust collector ring. Place a total of four units of desiccant in exhaust openings on engines that do not have an exhaust collector ring.

(7) Firmly attach a red cloth streamer to bags containing desiccant and bring loose end out a minimum of 18 inches. Use a 3- to 4-inch length of lockwire between cloth and desiccant to prevent streamer from acting as a wick.

(8) Seal all openings, joints, drain holes, and outlets with barrier material, MIL-B-1 21, and secure with pressure sensitive tape, Federal Specification PPP-T-60.

(9) Use following procedure as alternate method of exhaust sealing.

(a) Remove exhaust stacks at cylinder outlet.

(b) Install cylinder exhaust outlet cover between exhaust stack opening and exhaust stack flange.

NOTE

Engines with Individual exhaust stacks have stacks removed and a cylinder exhaust outlet cover installed between exhaust stack flange and cylinder exhaust outlet.

(c) Fabricate covers locally.

(10) Seal all openings such as distributor vents and engine breathers with moisture proof plugs and covers Pressure sensitive tape, Federal Specification PPP-T-60, (red) may be used.

(11) Cover all engines installed on aircraft using engine covers furnished with aircraft. Provide lower portion of cover with a drain hole to prevent accumulations of water.

(12) Locally fabricate placard for engines with propellers installed, and conspicuously display placard on propeller blade. Placard shall have following information

DO NOT TURN PROPELLER
ENGINE PRESERVED IN ACCORDANCE
WITH APPLICABLE MAINTENANCE INSTRUCTIONS

e. Flyable Storage. Engine installed on aircraft which will not be flown for an Indefinite period of time, but are maintained in a flyable status or undergoing short-term maintenance, shall be treated as follows:

(1) Engine serviced with normal lubricant shall be given a ground runup each third day of Idleness.

NOTE

The runup consists of engine operation at a speed greater than idle for a period of 5 minutes or until highest allowable oil inlet temperature is attained. Every 14 days a 15-minute normal ground preflight shall be accomplished.

(2) Engines undergoing repair or inspection that cannot be operated shall be pulled through by hand or starter at least eight revolutions on the third day of idleness.

NOTE

Aground runup shall be accomplished on the seventh day of idleness. When runup cannot be accomplished on the seventh day, the crankshaft shall be pulled through and cylinders sprayed as outlined in paragraph 7-11b. Storage of aircraft engines in this manner shall not exceed 14 days.

(3) Upon conclusion of a ground runup on engines In flyable storage, make entries on applicable DA Forms 2408-13.

NOTE

Check the applicable aircraft maintenance manual for specific instruction pertaining to Flyable Storage.

7-13. Depreservatlon of Reciprocating Engines. The instructions contained In this section shall be followed prior to making the initial start to newly installed engines and engines installed in aircraft being removed from temporary and Indefinite storage, regardless of time In storage.

NOTE

Newly installed engines shall be given a depreservation run as soon as possible, but not later than 4 hours after preoiling has been accomplished. If more than 4 hours has elapsed since preoiling engine, complete preoiling procedure shall again be accomplished.

a. Preoiling. Proper preoiling lubricates internal gears and bearings, expels air from internal oil passages, and averts internal engine failures due to lack of lubrication. Accomplish preoiling either indoors or by applying engine preheat prior to preoiling when operating in temperature below 0 °F (-18 °C). For preoiling engines on aircraft using the diverter-segregator oil system, it is necessary to follow special instructions contained in applicable aircraft maintenance manual. Preoil using the following procedures:

NOTE

Engines need not be preoiled after oil change or after oil system components have been disconnected for normal maintenance. However, after oil change or after disconnecting oil system components located in the system between oil tank and engine oil pump, it will be necessary to disconnect oil inlet line at the pump and drain a sufficient amount of oil from the line to determine there is no obstruction or air in the system.

(1) Prepare engine for preoiling as follows:

(a) Service oil tank, oil sump, or crankcase with engine oil specified In applicable maintenance manual.

(b) Provide an external power source.

(c) When spark plugs have been installed, remove one spark plug from each cylinder to reduce load on starter.

(d) Place engine controls in following positions, as applicable.

Ignition switch ....OFF
Throttle .... OPEN
Mixture control ..... IDLE CUT-OFF
Fuel shutoff valve ..... .OFF
Oil shutoff valve ..... .OPEN

(e) Provide suitable containers of approximately 5 gallons capacity to catch oil that drains from sumps during preoiling operation.

(f) On engines which utilize crankcase breathers and which are equipped with a hydromatic propeller, remove plug from propeller dome and pour a sufficient amount of preoiling lubricant into dome to bring lubricant level to plug hole. Reinstall and safety the plug In propeller dome.

NOTE

This step is not required for engines having propeller shaft breathers, reversible-type propellers, or engines not equipped with hydromatic propellers.

(2) Preoil engine by one of the following methods:

CAUTION

Devices having heating elements in direct contact with preoiling mixture or oil shall not be used Damage may otherwise result

(a) Preoil engine having a dry sump-type oil system using a pressure tank.

(b) Preoil engine having a wet sump by rotating crankshaft with starter and utilizing normal engine oil supply and oil pump to provide pressure

(3) Provide suitable viscosity by heating and maintaining lubricant used for preoiling at a temperature between 110 ° to 175 °F (38 ° to 80 °C) when using preoiling equipment incorporating provisions for heating. When preoiling with engine oil pump or with equipment not incorporating a heating element, dilute lubricant, at a temperature lower than 30 °F (-1 °C), with gasoline in accordance with percentage calculated from chart shown In figure 7-25. Mix thoroughly prior to preoiling.

(4) Preoil O-series engines by servicing oil system with grade oil specified for engine, and the turn engine through with starter until oil pressure is indicated on aircraft oil pressure gauge.

(5) Preoil all radial engines as follows:

CAUTION

Do not energize starter over 15 seconds. Allow starter to cool after each energizing. Damage to starter may otherwise result

(a) Prime oil pump by removing applicable plug and rotating crankshaft with starter until all air is expelled from vent and a steady flow of oil is coming from vent. Reinstall plug.

NOTE

On engines not having a plug, disconnect oil inlet line and allow sufficient oil to drain to assure air in the line is eliminated.

(b) Remove drain plugs from front and rear sumps on installations having sumps in these locations.

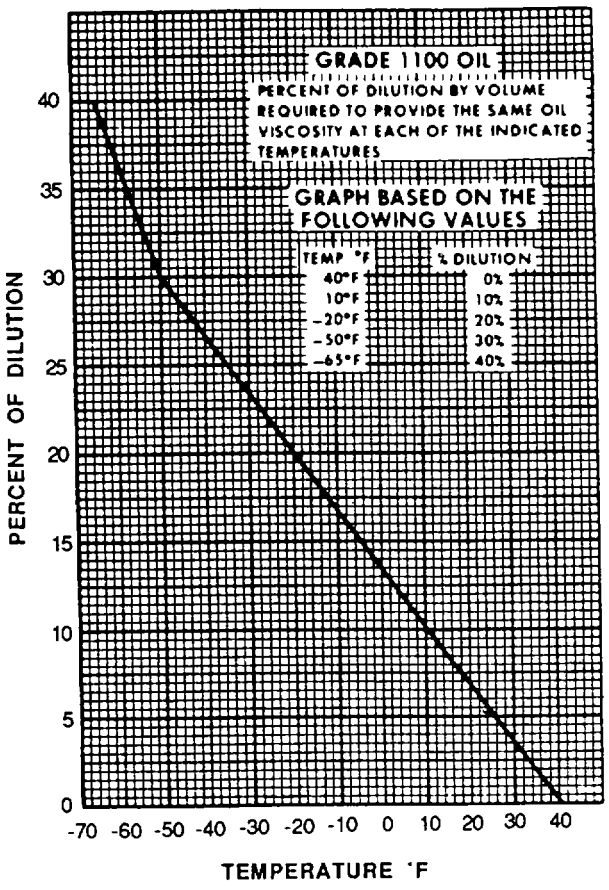

Figure 7-25. Percent Dilution Versus Temperature for Grade 1100 Oil

(c) Connect preoiler to preoiling fitting.

(d) Rotate engine with starter and commence preoiling until oil is flowing freely from sump plug holes and pressure Is indicated on oil pressure gauge in aircraft.

(e) Cease operation and replace sump plugs.

(f) Remove rocker box covers from number one cylinder or both top covers on double row engines and continue preoiling until oil is obtained from all rocker arms that have been removed.

(g) Disconnect preoiler and reinstall all parts removed.

NOTE

Newly installed engines will be given an initial start as soon as possible, but not later than 4 hours after preoiling has been accomplished. When any period of time in excess of 4 hours has elapsed since engine was preoiled, complete preoiling procedure shall again be accomplished before attempting initial start of engine.

b *Depreservation Run.* The depreservation run eliminates the necessity of removing or draining Intake pipes prior to installation of engine in the aircraft. Perform depreservation run using the following procedures:

NOTE

Newly installed engines shall be given a depreservation run as soon as possible, but not later than 4 hours after preoiling has been accomplished if more than 4 hours has elapsed since preoiling engine, complete preoiling procedure shall again be accomplished.

(1) Prior to starting engine, remove one spark plug from each cylinder below the horizontal centerline of engine. Refer to TB 55-2925-200-25 for proper spark plugs to be utilized during depreservation run.

NOTE

On seven-cylinder engines which would necessitate removal of spark plugs from four cylinders, thereby resulting in excessively rough operation, the one cylinder below the horizontal centerline on right side of engine when viewing engine at propeller end may be left operative. This permits operation of four cylinders rather than three, which greatly stabilizes engine operation.

(2) Install approved depreservation valve in each open plug hole.

NOTE

Install length of hose on each depreservation valve to vent large quantities of oil overboard. This eliminates a fire hazard and accumulation of oil around cylinder or baffles.

(3) All spark plug leads, except those removed to permit Installation of depreservation valves, will remain connected to spark plugs. Install metal shipping caps to disconnected leads.

NOTE

The metal shipping caps ground out the ignition, thereby eliminating excessive voltage buildup in the magneto and possibility of flash-over at terminal end of ignition lead.

(4) Start engine and run at 800 to 1500 rpm for 30 seconds to 1 minute. Operation may be accomplished on either primer or carburetor, or both, to obtain smoothest possible operation.

NOTE

- **Normally, smoothest engine operation is obtained at higher engine speeds and a higher air velocity through Intake pipes will result In cases where extreme cold temperatures exist, engine to be started should be preheated prior to starting and should be allowed to run longer than the 1-minute period, provided excessive vibration Is not encountered.**

- **Corrosion-preventive compound, if present in Intake pipes, will have adequate time to be heated and flow from Intake pipes through external drain or into combustion chamber and be expelled into exhaust system or through depreservation valve.**

(5) Stop engine by closing throttle and discontinuing use of primer or by moving mixture control to IDLE CUT-OFF position.

(6) Install spark plugs, Ignition leads, engine cowling, etc., and proceed to start engine using prescribed starting procedures outlined in the applicable flight manual.

NOTE

Spark plugs used for depreservation runs shall be replaced with new or overhauled spark plugs before placing the engine in service.

CHAPTER 8

GENERAL TURBINE ENGINE MAINTENANCE

8-1. General. The maintenance Instructions and procedures contained in this chapter are general and applicable to turbine engines used on Army aircraft Maintenance Instructions that are specific and peculiar to particular engines are contained In the applicable maintenance manuals and will be used in conjunction with general information contained in this chapter.

8-2. Engine Types and Designations. Turbine engine types and designations are explained in the following paragraphs.

a. *Types.* Types of aircraft turbine engines are the centrifugal-flow and axial-flow turbine engines. Centrifugal-flow engines, as shown In figure 8-1, compress the air by centrifugal force. The air enters the air inlet and is directed to the compressor inducer vanes through circumferential inlets located in front and back of the Impeller. Axial-flow engines, as shown in figure 8-2, compress the air axially. The air enters the air inlet and flows in a relatively straight path In line with the axis of the engine.

b. *Designation Examples.* On gas turbine engine designations, such as T53-L-1, T denotes gas turbine with drive shaft, numeral 53 is assigned to the engine by the services, L denotes the manufacturer, and 1 denotes major modification.

8-3. Turbine Engine Theory. The gas turbine engine is a type of internal combustion engine that produces power by a continuous and self-sustaining process of compression, combustion, expansion, and exhaust. Air is compressed in the compressor section, mixed with atomized fuel and burned in the combustion chambers. As the fuel burns, the resultant gases expand through turbine wheels to convert heat energy to useful power.

8-4. Turbine Engine Precautions. The following precautions shall be observed during maintenance of turbine engines.

a. Regularly police parking areas, runways, taxiiways, and runup and exhaust areas to ensure against the presence of foreign objects which could enter the engine. Special attention shall be given to cleaning of cracks and expansion seams in hard surfaced areas where engines will be operated, as tests have indicated that these are the main source of foreign objects which are ingested.

b. Periodically instruct personnel concerned with aircraft maintenance of foreign object hazards to ensure that maximum preventive measures are taken.

c. Ensure that air inlet and tailpipe dust excluders are installed at all times when engines are not being operated, except when it is known the engine will again be operated Immediately following shutdown.

d. Prior to each engine start, thoroughly Inspect and clean inlet ducting. Remove all loose nuts, bolts, tools, or other objects which would cause engine damage and possible subsequent failure.

e. After work has been accomplished, inspect to ensure that all accessories and attaching parts are secure and that work areas are cleared of foreign objects prior to engine operation.

f. Provide properly marked receptacles (FOD cans) in all work areas into which trash, ferrous and nonferrous scrap, safety wire, etc. , may be placed.

g. Adhere to applicable gas turbine-powered aircraft taxiing and parking procedures as outlined in applicable technical bulletins. This minimizes damage due to objects being thrown by the exhaust blast Into the intake of other aircraft.

h Ensure that gas turbine-powered aircraft takeoff and landing procedures are such as to avoid the intake of foreign objects blasted from runways and runway shoulders by preceding aircraft.

i. Use inlet duct runup screens during all ground operations, including taxiing to and from takeoff position, with the following exceptions:

- Inlet duct runup screens are not required on aircraft using centrifugal flow engines.

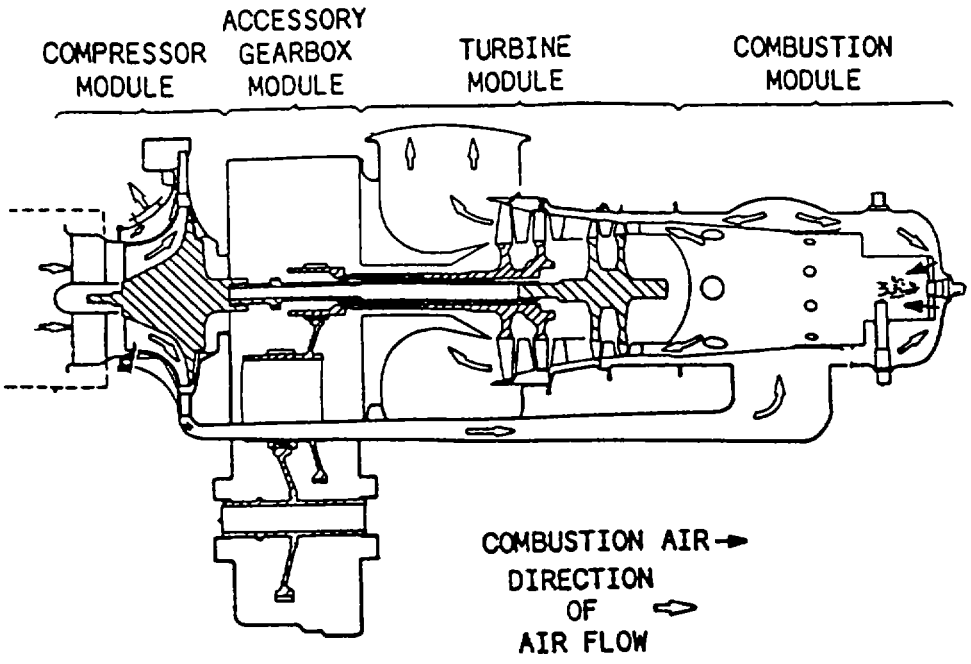

Figure 8-1. Centrifugal-Flow Engine

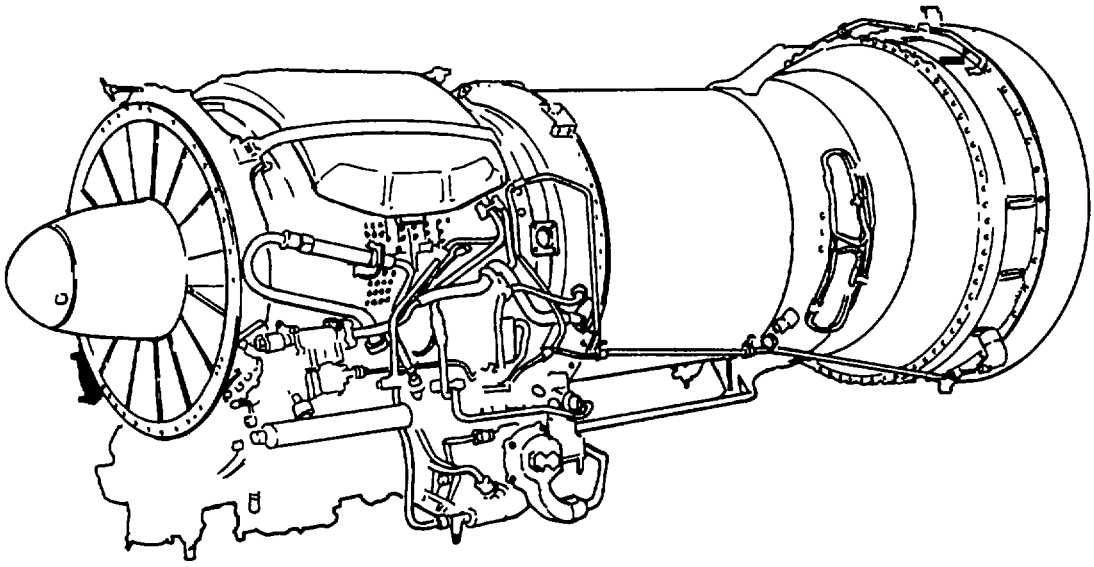

Left Side View of T73-P-700 Engine

Figure 8-2. Axial-Flow Engine

- When necessary to properly evaluate engine performance or when icing conditions exist, inlet duct runup screens should be removed. Runup with screens removed shall be made in a designated, thoroughly cleaned area.

CAUTION

Inlet duct runup screens shall not be installed and removed with engine operating above Idle rpm Loose Items of clothing shall not be worn and objects which might be drawn into the Intake ducts shall not be carried when installing or removing screens. Damage to the engine may otherwise result.

- **Inlet duct runup screens may be left off during taxiing to and from takeoff position when requirements or existing conditions make the use of screens impractical Since specific conditions warranting removal of screens as specified above cannot be predetermined, specific conditions may be determined by each command as necessary to conduct their operation Approval of screen removal should include any additional precautions necessary to assure safe operation of engine**.

j. Use only nonmetallic-head hammers when required to install parts on engine.

k. When possible, use appropriate hoist or lifting yoke on heavy or bulky parts, such as tailpipes.

l. Tighten jack screws, attaching screws, bolts, and nuts In small increments on opposite planes.

WARNING

Lead poisoning is an accumulative disease that can be fatal. Preventive rather than curative measures shall be stressed.

m. A turbine engine that has operated on fuel containing tetraethyl lead may have a yellow powder on those sections that are exposed to combustion gases. for example, tail pipes and combustion chambers. Extreme care shall be used by all personnel handling such parts to prevent internal contamination of the body through open cuts, sores, or inhaling. Personnel shall adhere to following precautionary measures.

- Change clothes daily.
- When possible, gloves shall be worn. Wash or change gloves daily.
- Hands shall be thoroughly washed before eating, drinking, smoking, or using toilet.
- Scrub body thoroughly each day.

8-5. Turbine Engine Design and Construction . A typical turbine engine consists of an air inlet, compressor section, combustion section, turbine section, exhaust section, accessory section, and the necessary systems for starting, lubrication, fuel supply, and auxiliary purposes, such as anti-icing, cooling, and pressurization. The major components of all turbine engines are basically the same; however, the nomenclature of the component parts of various engines currently In use will vary slightly due to the difference In manufacturer terminology. These differences are reflected in the applicable maintenance manuals.

a. Inlet Ducts. There are two basic types of inlet ducts, the single entrance and the divided entrance duct. Single entrance inlet ducts are used with axial-flow engines, as shown in figure 8-3, to obtain maximum ram pressure through straight flow. Divided entrance inlet ducts, as shown in figure 8-4, provide the opportunity to diffuse the incoming air so It enters the plenum chamber with the low velocity required to utilize a centrifugal-flow engine inlet ducts may be classified as:

- Nose Inlets, located in the nose of the fuselage or powerplant pod or nacelle.
- Wing inlets, located along the leading edge of the wing, usually at the root for single-engine installations.
- Annular inlets, encircling, In whole or in part, the fuselage or powerplant pod or nacelle.
- Scoop inlets, which project beyond the immediate surface of the fuselage or nacelle.
- Flush Inlets, which are recessed in the side of the fuselage, powerplant pod, or nacelle.

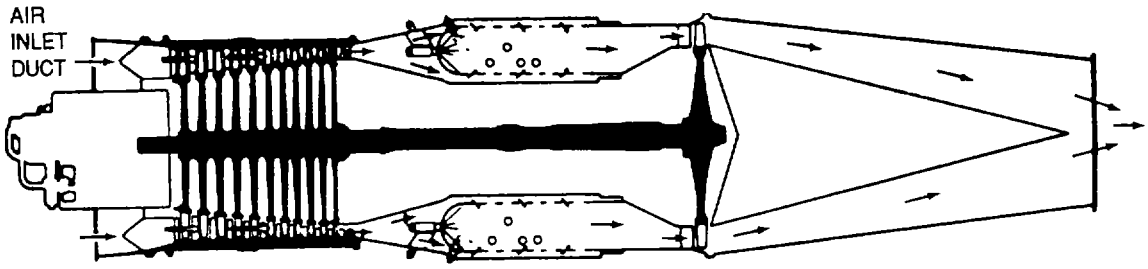

Figure 8-3. Single Entrance Inlet Duct (Axial-Flow Engine)

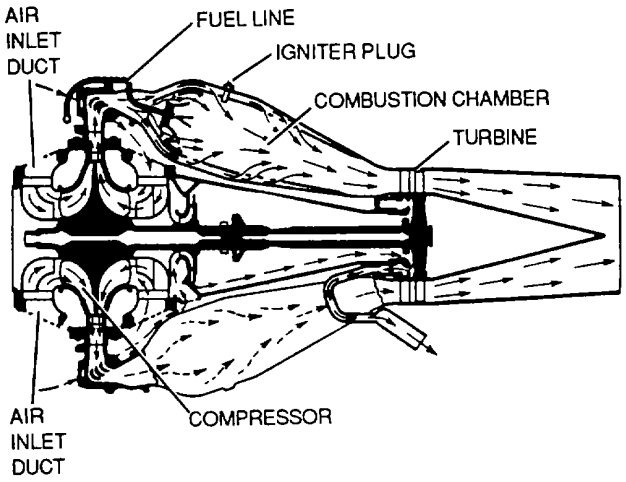

Figure 8-4. Divided Entrance Inlet Duct (Centrifugal-Flow Engine)

b *Particle Separators.* Particle separators, as shown in figure 8-5, prevent foreign particles from entering the compressor section of turbine engines. Air enters the engine through the swirl frame. Swirl vanes direct the air into a rotating or swirling pattern. Sand, dust, and other foreign objects are separated by centrifugal action. These objects are carried to the outer section of the main frame and into the scroll case. Particles are drawn from the scroll case by the blower and are blown out the aircraft discharge duct. The relatively clean air that remains after particles are separated is carried to the front frame deswirl vanes, which straighten the air flow before it enters the compressor inlet.

c. *Compressor Section.* The compressor section of a turbine engine has many functions. Its primary functions is to supply air in sufficient quantity to satisfy the requirements of the combustion burners. The compressor must increase the pressure of the mass of air received from the air inlet duct and then discharge it to the burners in the quantity and at the pressure required. A secondary function of the compressor is to supply bleed-air for various purposes In the engine and aircraft.

(1) Centrifugal-flow compressor. The centrifugal-flow compressor consists basically of an Impeller (rotor), a diffuser (stator), and a compressor manifold, as shown In figure 8-6. The compressor achieves its purpose by picking up the entering air and accelerating it outwardly by centrifugal action.

(2) Axial-flow compressor. In the axial-flow engine, the air is compressed while continuing in its original direction of flow, thus avoiding the energy loss caused by turns. From inlet to exit the air flows along an axial path and is compressed at a ratio of approximately 1.25.1 per stage. The axial-flow compressor has two main elements, a rotor and a stator, as shown in figure 8-7. The rotor has blades fixed on a spindle. These blades Impel air rearward in the same manner as a propeller because of their angle and airfoil contour. The rotor, turning at high speed, takes In air at the compressor inlet and impels it through a series of stages. The action of the rotor increases the compression of the air at each stage and accelerates it rearward through several stages With this increased velocity, energy is transferred from the compressor to the air in the form of velocity energy. The stator blades act as diffusers at each stage, partially converting high velocity to pressure. Each consecutive pair of rotor and stator blades constitutes a pressure stage. The number of rows of blades (stages) is determined by the amount of air and total pressure rise required. The greater the number of stages, the higher the compression ration.

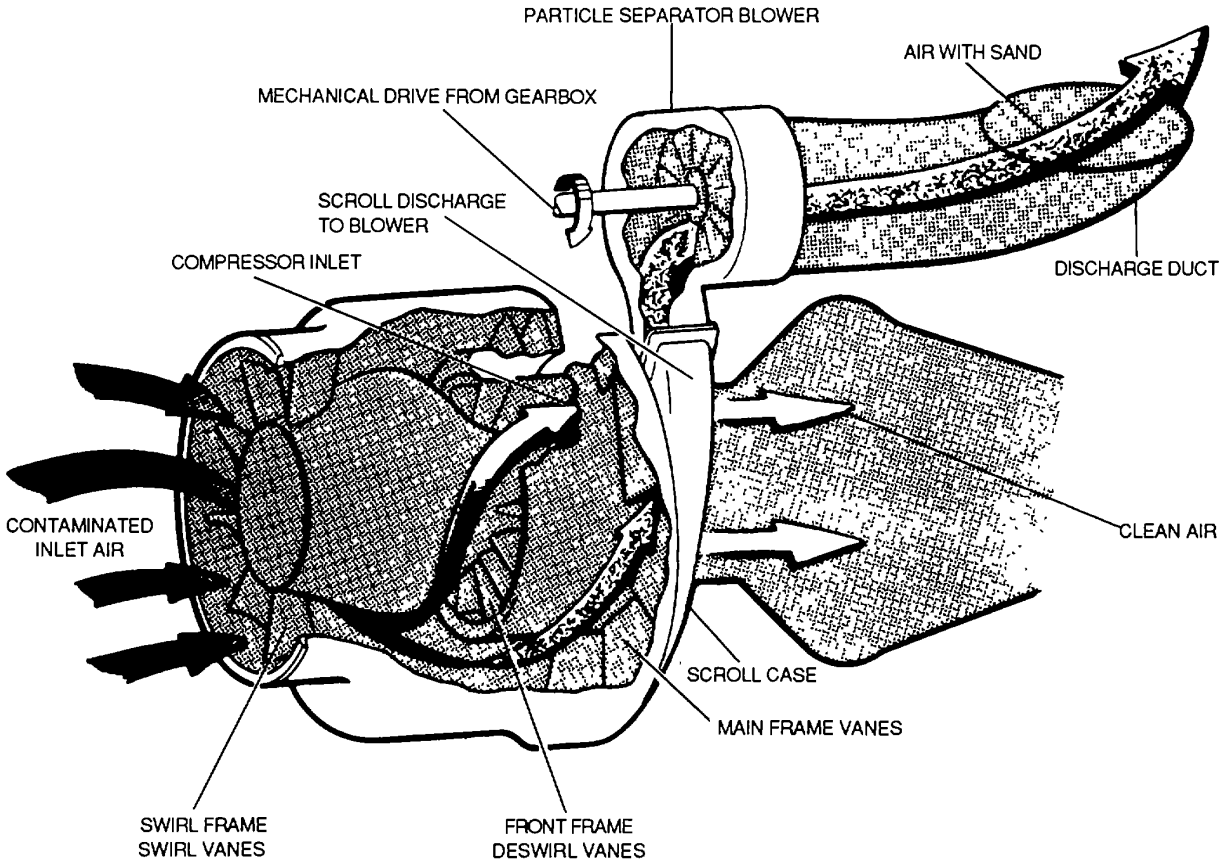

Figure 8-5. Particle Separator

d. *Diffuser Section.* The diffuser increases the compressor discharge area and reduces the speed of the centrifugal impeller airflow, causing the air pressure to increase. This pressurized air is directed to the combustor through the diffuser case The diffuser case mounts on the rear flange of the compressor stator it directs compressor discharge air to the combustion chamber.

e. *Combustion Section.* The combustion section houses the combustion process, which raises the temperature of the air passing through the engine. This process releases energy contained in the air-fuel mixture. The major part of this energy is required at the turbine to drive the compressor. The remaining energy creates the reaction or propulsion and passes out the rear of the engine in the form of a high-velocity jet. The location of the combustion section is directly between the compressor and the turbine sections. The combustion chamber is always arrange coaxially with the compressor and turbine regardless of type, since the chambers must be In a through-flow position to function efficiently.

Can-Type. The can-type combustion is typical of the type used on both centrifugal and axial-flow engines Figure 8-8 illustrates the arrangement for can-type combustion. The engine combustion cans are numbered in a clockwise direction facing the rear of the engine with the No. 1 can at the top. The can-type combustion consist of an outer case or housing, which is perforated stainless steel (highly heat resistant) (See Figure 8-9).

f. *Turbine Section.* The turbine transforms a portion of the kinetic (velocity) energy of the exhaust gases into mechanical energy to drive the compressor and accessories. This is the sole purpose of the turbine and this function absorbs approximately 60 to 80 percent of the total pressure energy from the exhaust gases. The turbine assembly consists of two basic elements, the stator and the rotor, as does the compressor unit. These two elements are shown in figure 8-10.

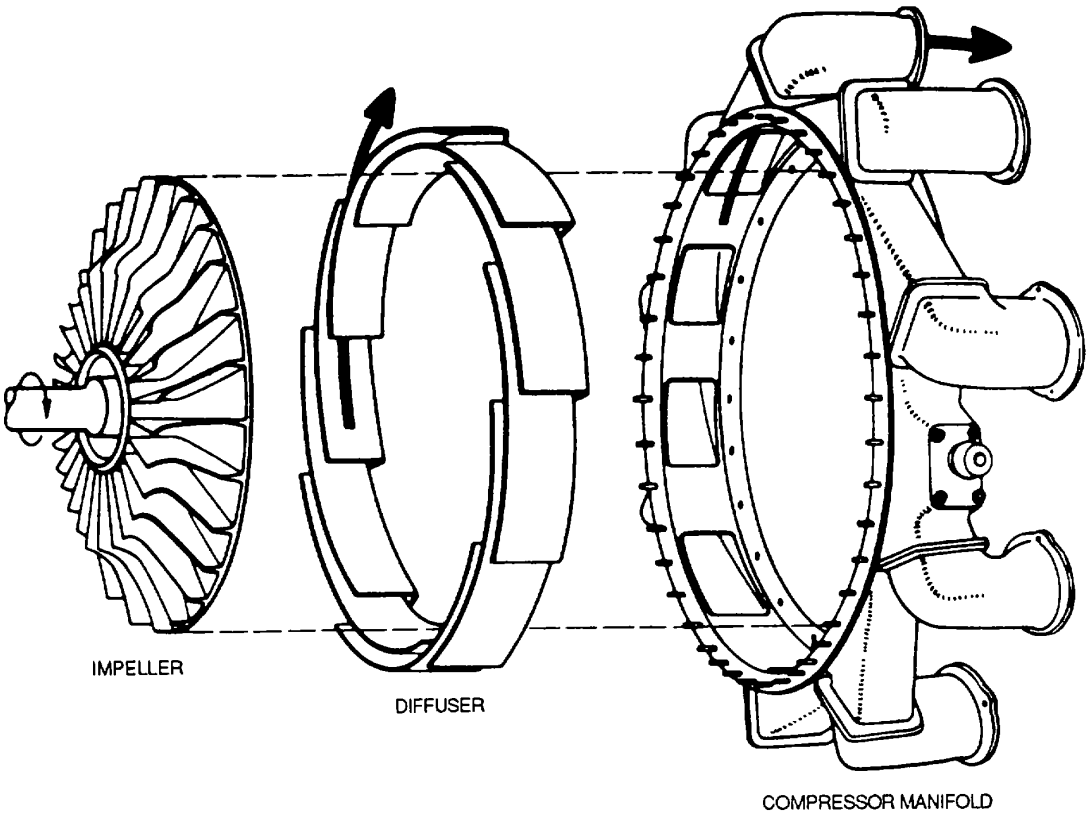

Figure 8-6. Centrifugal-Flow Compressor Components

g. Exhaust Section. The exhaust section of a turbine engine is made up of several components, each of which has its individual functions. Although the components have individual purposes, they also have one common function. they must direct the flow of hot gases rearward in such a manner as to prevent turbulence and at the same time Impart a high final or exit velocity to the gases.

h. Accessory Section. The accessory section of a turbine engine has various functions. The primary function is to provide space of the mounting of accessories necessary for operation and control of the engine. Generally, it also includes accessories concerned with the aircraft, such as electric generators and fluid power-pumps Secondary functions include acting as an oil reservoir and/or oil sump, and housing the accessory drive gears and reduction gears.

i. Governors and Fuel Controls. Governors and fuel controls used on turbine engines are explained in the following paragraphs.

(1) Governors. The speed-sensitive control and speed-set governor are discussed in the following paragraphs.

(a) Speed-sensitive control. The speed-sensitive control, as shown in figure 8-11, is mounted on the tachometer pad of the accessories housing. It contains three switches which are actuated at certain speeds by a flyweight system. During a start, one switch turns on the fuel and ignition, parallels fuel pump elements, energizes the starting fuel enrichments system when fuel enrichment switch is on, and closes the drip valve. Another switch shuts off the ignition, deenergizes the drip valve (which is then held closed by fuel pressure), and shifts the fuel pumps from parallel to series operation. Still another switch shifts the temperature datum control from start limiting and limits the temperature datum valve to a certain reduction of engine fuel flow.

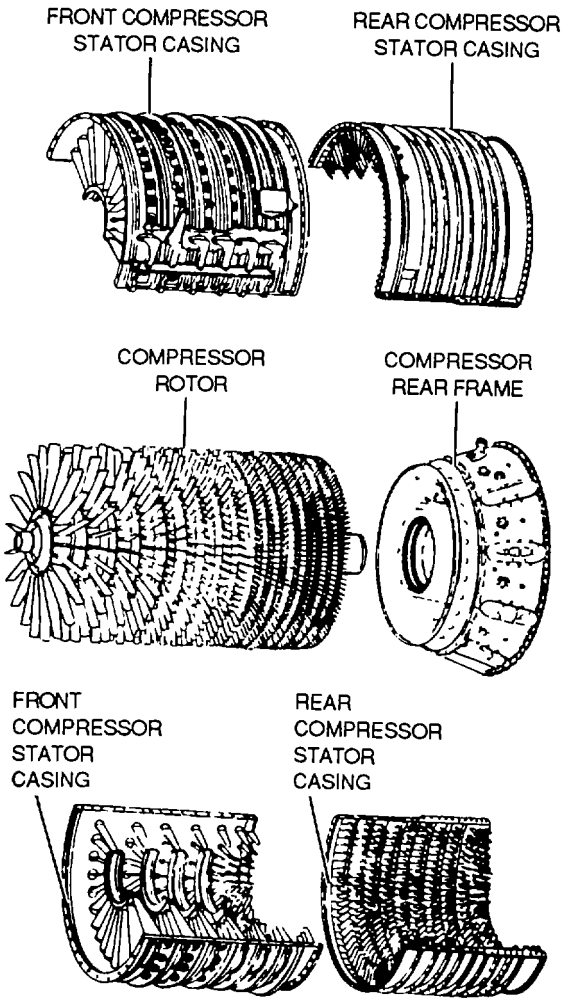

Figure 8-7. Rotor and Stator Components of an Axial-Flow Compressor

(b) Speed-set governor. The speed-set governor, as shown in figure 8-12, controls the position of the governor servo. It is a centrifugal, permanent-droop type governor driven by the engine high-speed rotor (N_2) through a gear train. As engine speed increases, the fly-weights tend to move outward, lifting the speed set pilot valve. Conversely, when engine speed decreases, the fly-weights move inward and the pilot valve is lowered. The power lever in the cockpit positions the speed-setting cam in the fuel control unit to manipulate a system of levers and thus control the compression of the speeder spring. The speeder spring exerts force on the speed-set pilot valve. The condition of on-speed indicates the speeder spring force and the flyweight force are equal.

(2) Fuel controls. Fuel controls can be divided into two basic groups hydromechanical and electronic. The fuel control senses power lever position, engine rpm, either compressor inlet pressure or temperature, and burner pressure of compressor discharge pressure. These variables affect the amount of thrust that an engine will produce for a given fuel flow.

(a) Hydromechanical fuel controls. Hydromechanical fuel controls are extremely complicated and are composed of speed governors, servo systems, sleeve and pilot valves, feedback or follow up devices, and metering systems.

(b) Electron/c fuel controls Electronic fuel controls contain the same Items as the hydromechanical fuel control as well as amplifiers, thermocouples, relays, electrical servo systems, switches, and solenoids.

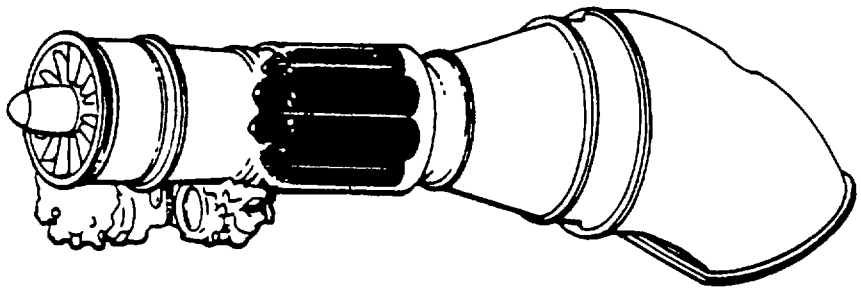

Figure 8-8. Can-Type Combustion Chamber Arrangement

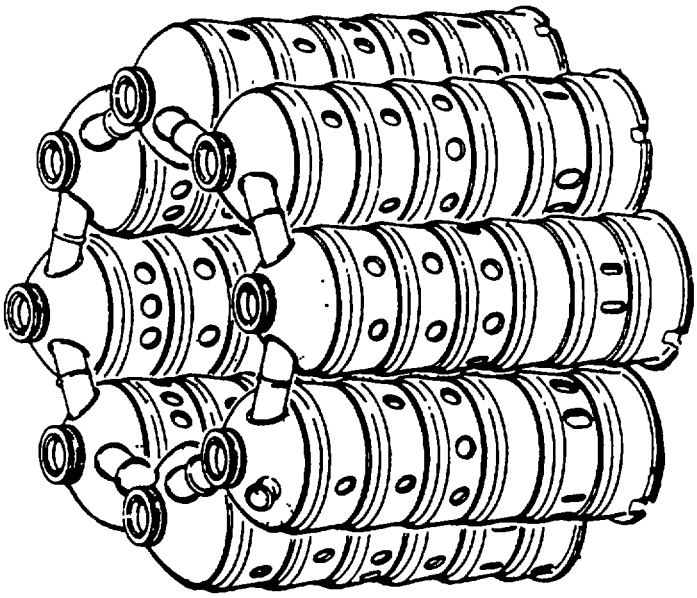

Figure 8-9. Can-Type Combustion Chamber

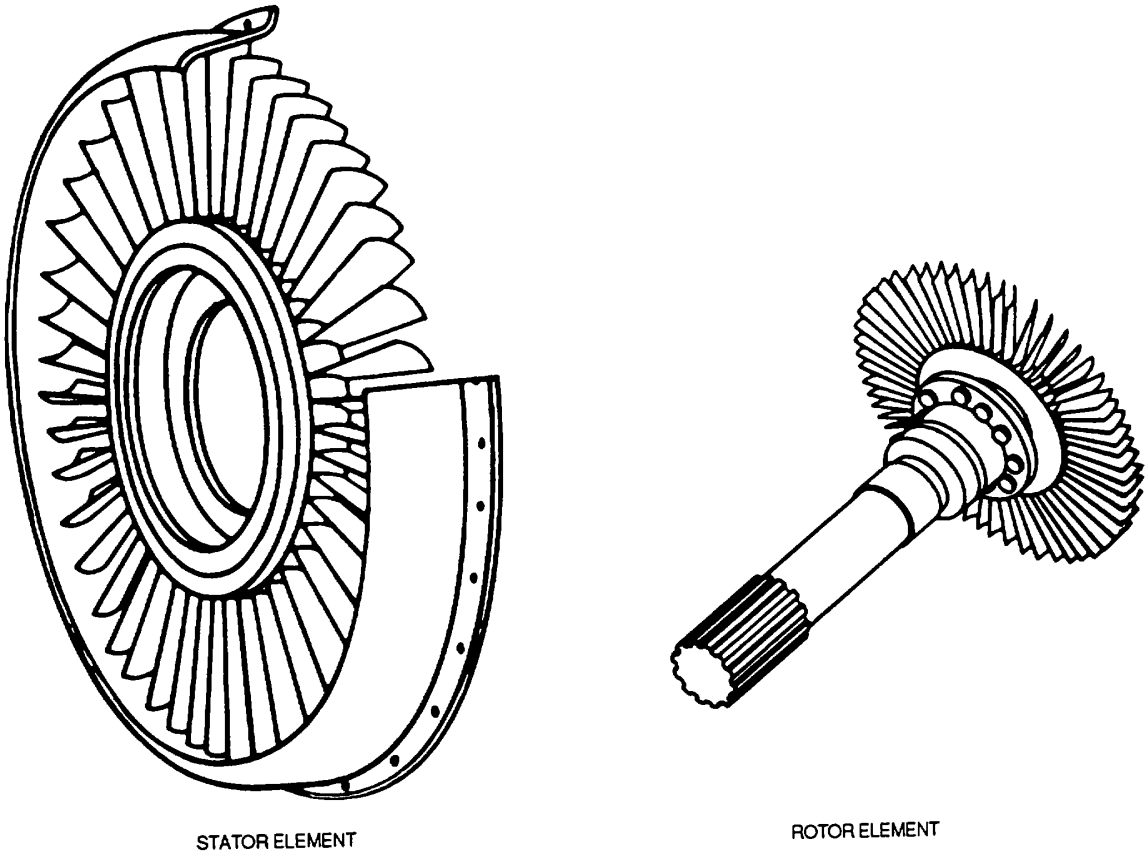

Figure 8-10. Turbine Assembly Elements

j. Ignition Systems. Turbine ignition systems are operated for a brief period during the engine-starting cycle, and, as a rule, more trouble-free than the typical reciprocating engine ignition system. Most turbine engines are equipped with a high-energy, capacitor-type ignition system

(1) System components. A typical ignition system includes two exciter units, two transformers, two intermediate ignition leads, and two high-tension leads. Thus, as a safety factor, the Ignition system is actually a dual system, designed to fire two igniter plugs. Figure 8-13 shows one side of a typical Ignition system.

(2) Igniter plugs. The igniter plug of a turbine engine ignition system differs considerably from the spark plug of a reciprocating engine ignition system. Its electrode must be capable of withstanding a current of much higher energy than the electrode of a conventional spark plug. This high-energy current can quickly cause electrode erosion, but the short periods of operation minimize this aspect of Igniter maintenance. The electrode gap of the typical igniter plug Is designed much larger than that of a spark plug, since the operating pressures are much lower and the spark can arc more easily than Is the case for a spark. Finally, electrode fouling, so common to the spark plug, is minimized by the heat of the high-intensity spark. Typical igniter plugs are shown in figure 8-14.

k. Fuel Systems. The fuel system must deliver to the combustion chambers not only in the right quantity, but also in the right condition for satisfactory combustion. The fuel nozzles form part of the fuel system and atomize or vaporize the fuel so that it will ignite and bum efficiently. The fuel system must also supply fuel so that the engine can be easily started on the ground and In the air. This means that the fuel must be injected into the combustion chambers in a combustible condition when the engine is being turned over slowly by the starting system, and that combustion must be sustained while the engine Is accelerating to its normal running speed.

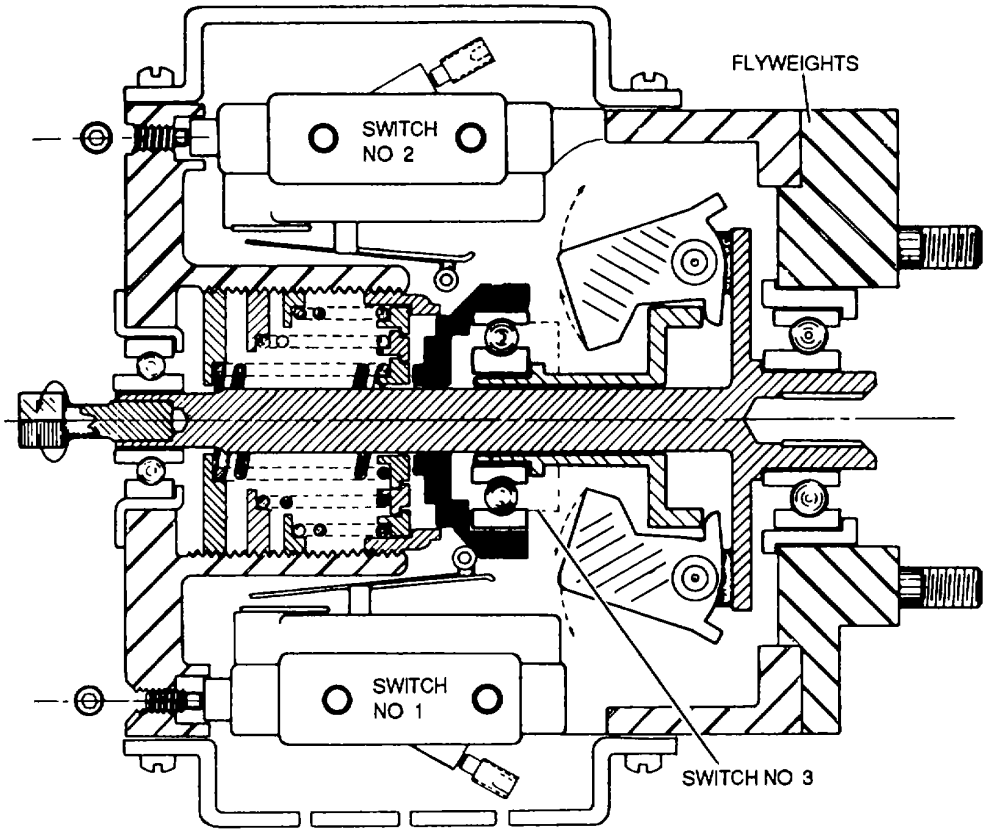

Figure 8-11. Speed-Sensitive Control

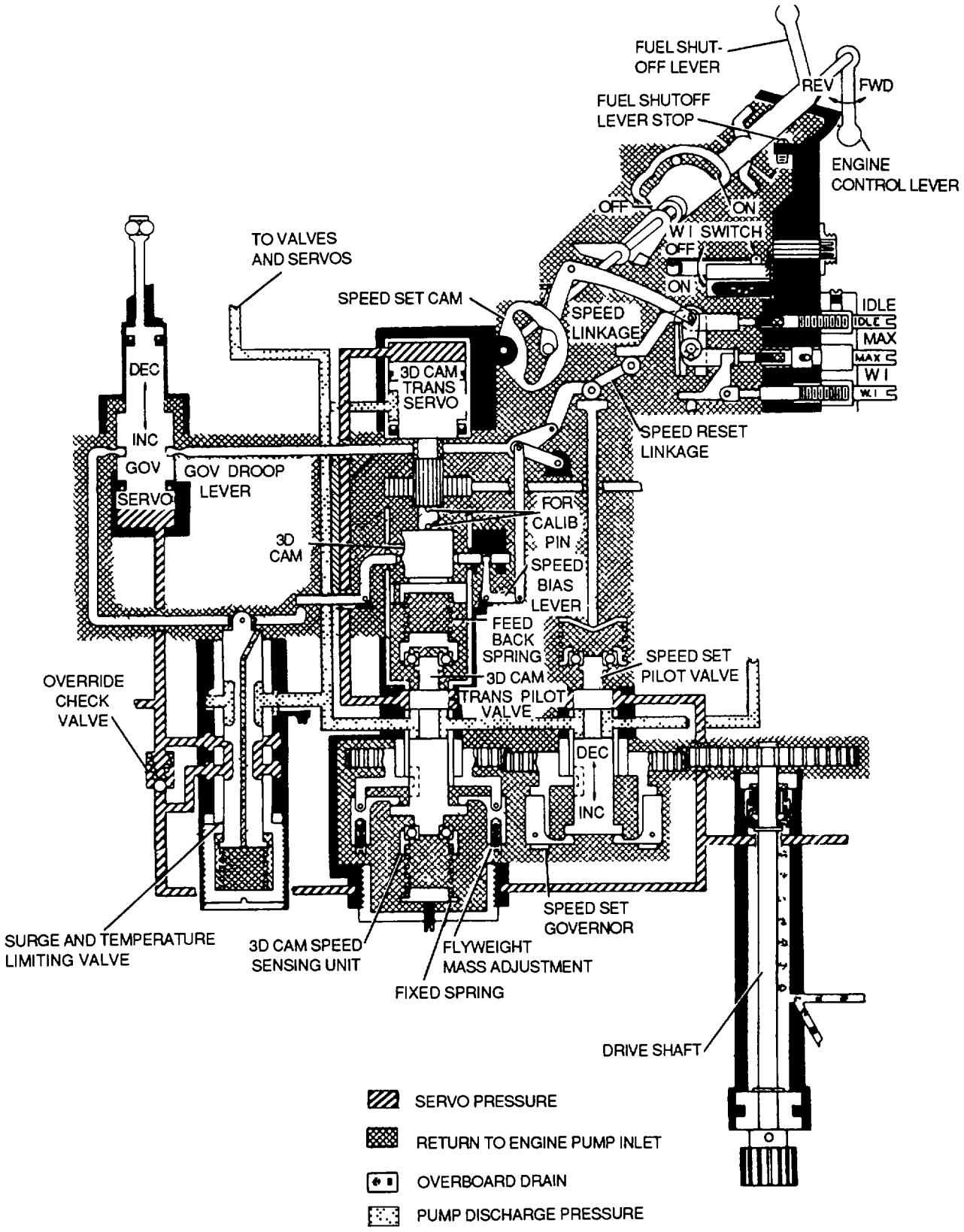

Figure 8-12. Speed-Set Governor

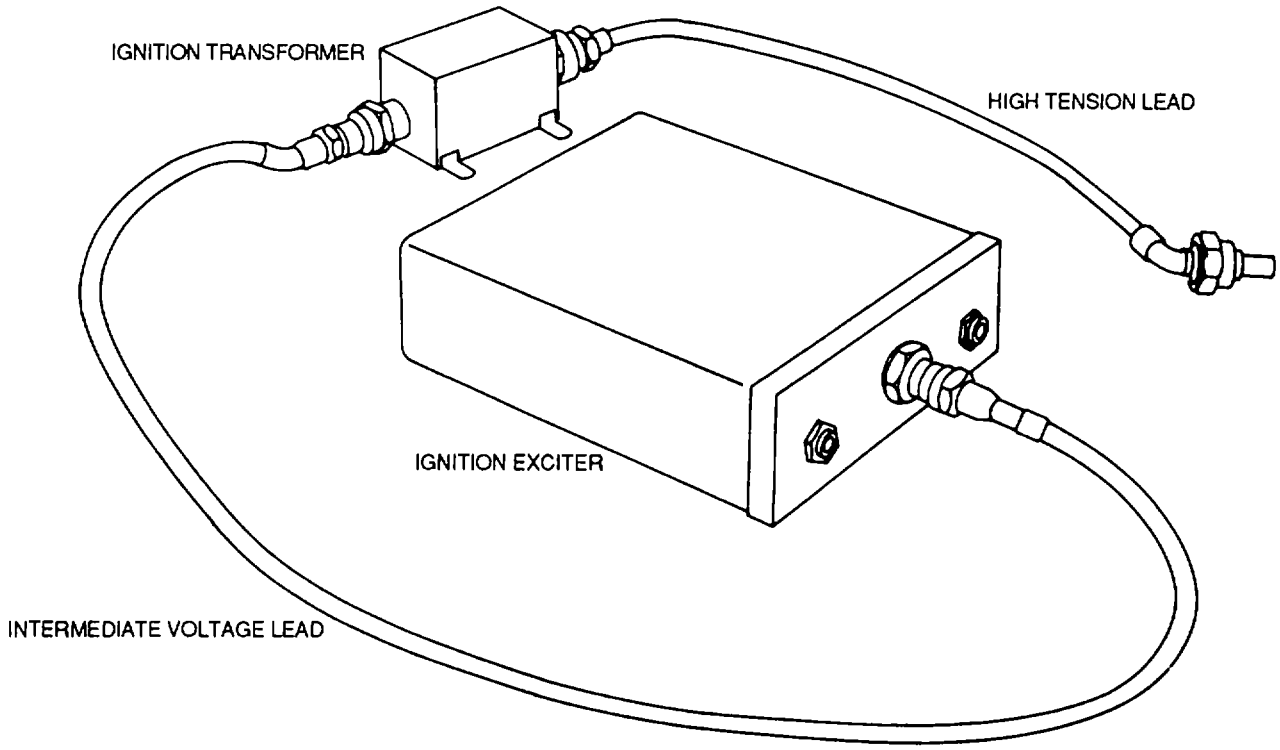

Figure 8-13. One Side of a Typical Ignition System

(1) Fuel controls. Regardless of the type, all fuel controls accomplish essentially the same functions, but some sense more engine variables than others. The fuel control senses power lever position, engine rpm, either compressor inlet pressure or temperature, and burner pressure or compressor discharge pressure. These variables affect the amount of thrust that an engine will produce for a given fuel flow.

(2) Fuel nozzles. The fuel nozzles inject fuel into the combustion area In a highly atomized, precisely patterned spray so that burning is completed evenly and in the shortest possible time and in the smallest possible space. Fuel nozzle types vary considerably between engines, although for the most part fuel is sprayed into the combustion area under pressure through small orifice in the nozzles The two types of fuel nozzles generally used are the simplex and the duplex configurations.

(a) Simplex fuel nozzle. The simplex fuel nozzle was the first type nozzle used in turbine engines and was replaced in most installations with the duplex nozzle, which gave better atomization at starting and idling speeds. The simplex nozzle, as shown in figure 8-15, is still being used to a limited degree. Each of the simplex nozzles consists of a nozzle tip, an insert, and a strainer made up of fine-mesh screen and a support.

(b) Duplex fuel nozzle. The duplex fuel nozzle is the nozzle most widely used in present-day gas turbine engines The duplex nozzle usually requires a dual manifold and a pressurizing valve or flow divider for dividing primary and main fuel flow into a desirable spray pattern for combustion over a wide range of operating pressures. A nozzle typical of this type is shown In figure 8-16.

(3) Fuel filters. A low-pressure filter Is installed between the supply tanks and the engine fuel system to protect the engine-driven fuel pump and various control devices. An additional high-pressure fuel filter is installed between the fuel pump and the fuel control to protect the fuel control from contaminants. The three most common types of filters in use are the micron filter, the wafer screen filter, and the plain screen mesh filter. The individual use of each of these filters is dictated by the filtering treatment required at a particular location.

8-6. Turbine Engine Inspection and Maintenance. Turbine engines shall be Inspected and maintained in accordance with the applicable maintenance manual. General procedures for various components and systems are explained in the following paragraphs.

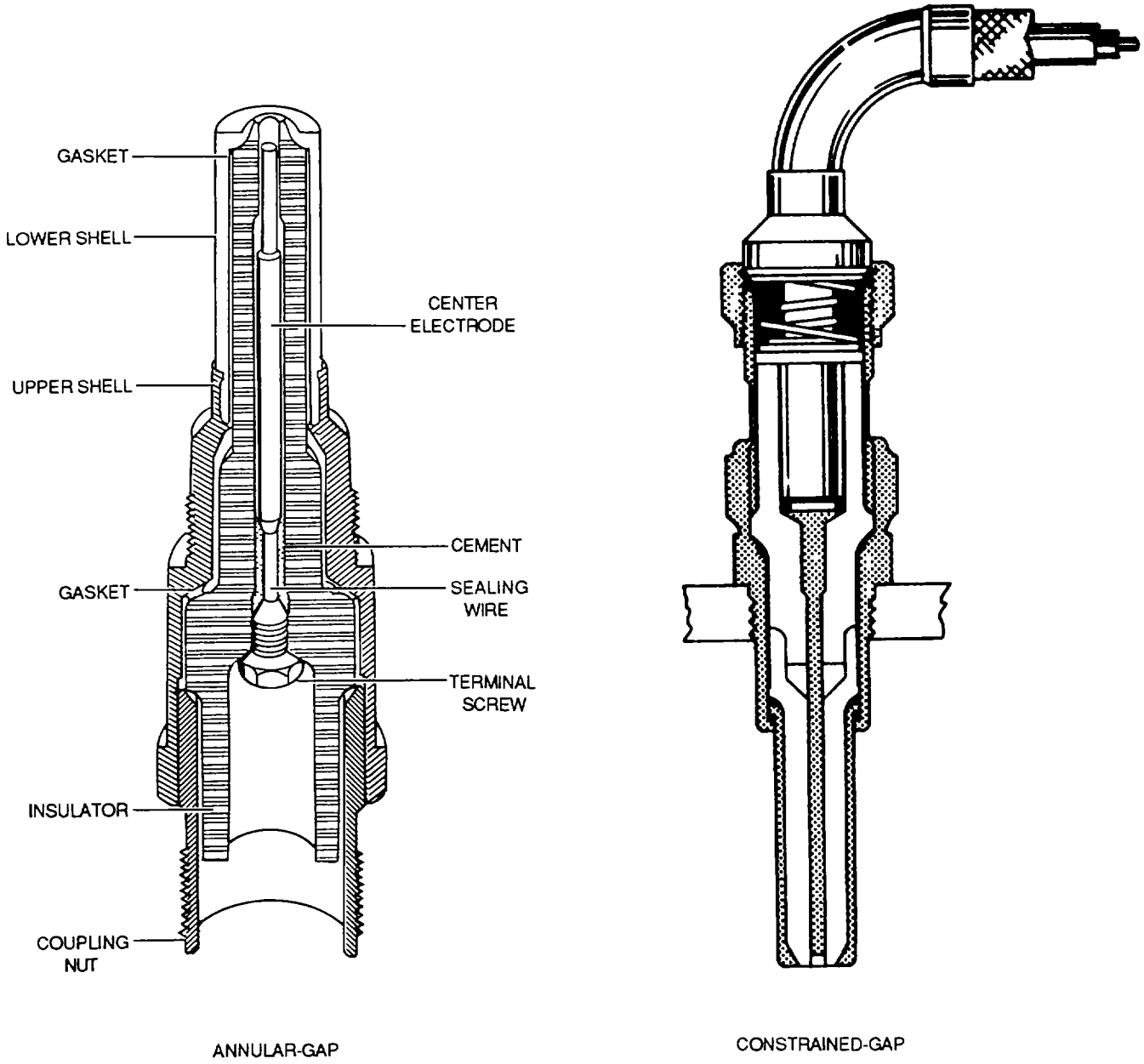

Figure 8-14. Typical Igniter Plugs

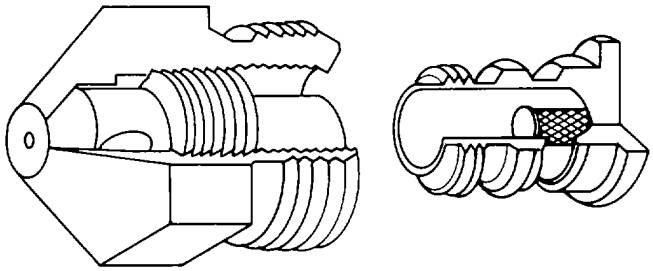

Figure 8-15. Simplex Fuel Nozzle

a. General Procedures. The following procedures shall be adhered to during turbine engine maintenance.

(1) Mark location of all attaching support brackets, clamps, and clips prior to removing lines, tubes, or conduit to facilitate reassembly with a felt tip marker Use ink conforming to Federal Specification TT-1-544.

(2) Use new O-rings, packing rings, cotter pins, lockpins, gaskets, and washers.

(3) Apply lubricating grease, MIL-G-4343, on all O-rings prior to installation.

(4) Apply thread compound, MIL-A-13881, to all threaded parts attached to the hot section.

(5) When gears are replaced, examine for pattern wear and backlash.

b. Health Indication Test. The Health Indication Test (HIT) is the method by which the aviator In day-to-day flying monitors the aircraft engine condition. This is accomplished by the aviator selecting an N1 speed (%) predicated upon the existing Free Air Temperature (FAT). The interstate Turbine Temperature (ITT) must then relate to a predicated value (Baseline ITT) within a certain tolerance. ITT variation from baseline values are logged by the aviator in accordance with the applicable maintenance manual This log, part of the engine records, is available to the maintenance officer as an aid In monitoring performance trends and in troubleshooting When the difference between a recorded ITT and the baseline ITT is 20 °C (68 °F) or greater the aviator will make an entry on DA Form 2408-13 to notify the maintenance officer. A difference of 30°C (86°F) or greater is cause for grounding the aircraft until troubleshooting determines the cause of the excessive ITT. New ITT baseline values for HIT should be established after performing a baseline engine performance check. A new engine performance check should be made when an engine Is changed, when the fuel control unit is adjusted or replaced, or when repairs are made to the engine hot section.

c. Hot Start Inspection. A hot start occurs when exhaust gas temperature exceeds normal starting temperature limit.

NOTE

A hot start may be expected when a greater-than-normal starting fuel flow Is observed just as the power lever is moved Into the IDLE position.

d. Turbine Engine Analysis Check (TEAC). A normal Turbine Engine Analysis Check (TEAC) is performed for comparison of normal TEAC data with baseline data. This will confirm whether or not performance degradation has occurred and to what degree. In addition, TEAC data can be an aid in determining the cause of the performance loss (Refer to TEAC troubleshooting). A normal TEAC shall be performed whenever installed engine performance degradation Is suspected or as part of a general test flight (if applicable).

e. Foreign Object Damage Inspection. Most damage incurred by the engine is the result of ingestion of foreign objects Although screens are provided in the lower aft cowling section and around the engine compressor inlet case to prevent entry of larger objects, sand and grit will enter and cause compressor damage. The resultant damage will be in the form of nicks or scratches on the compressor blades. Such a nick or scratch can cause fatigue failure hours later, with disastrous effects to the entire engine.

CAUTION

When maintenance is performed on the engine, every effort shall be made to retrieve any object (wire, rivets, nuts, screws, etc.) dropped through the compressor inlet screen or into the cowling, even if engine disassembly Is required. Damage to the engine may otherwise result.

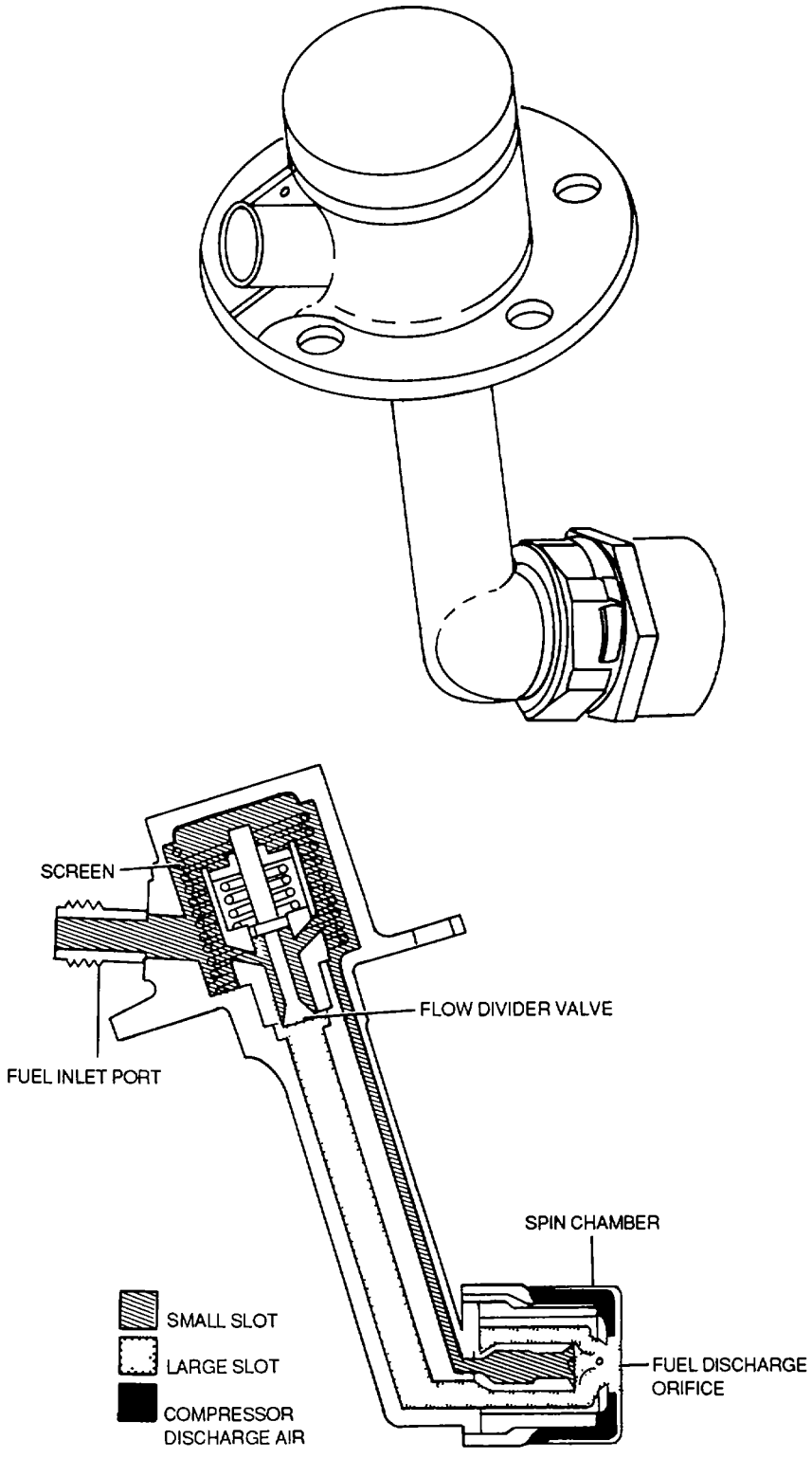

Figure 8-16. Duplex Fuel Nozzle

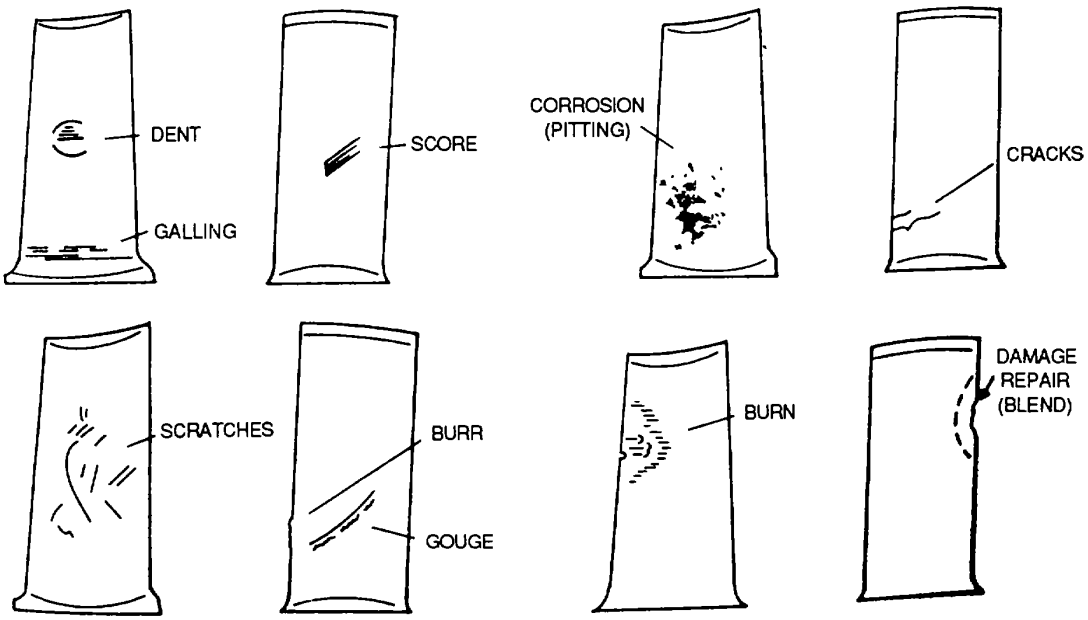

Figure 8-17. Compressor Blade Damage

f. Compressor Cleaning. Compressor cleaning consists of internal washing of the compressor with a cleaning compound which is intended for use on an engine displaying definite evidence of performance deterioration due to an accumulation of foreign material deposits on the compressor blading. Refer to the applicable maintenance manual for specific procedures.

g. Cold Section Maintenance. Maintenance to cold section components consists of repairing and replacing components as outlined In the specific engine maintenance manual.

h. Compressor. Blade Inspection and Repair. Compressor blades should be inspected for cracks, nicks, scores, scratches, buckling, and burns, as shown in figure 8-17. Minor damage can be repaired if the damage can be removed without exceeding the allowable limits established by the manufacturer. Typical compressor limits are shown In figure 8-18. Repair In accordance with the applicable maintenance manual.

i. Hot Section Maintenance . The following are repairs that can be made to the hot section of a turbine engine:

- Weld cracks in combustion chambers that do not exceed repair limitations, using method and procedure which keeps distortion to a minimum.
- Replace any turbine wheel blade found to have be out of repair limits. Check applicable maintenance manual. Turbine blades will only be changed in matched pairs.
- Replace tailpipes when cracked, bent, or distorted.

j. Turbine and Exhaust Maintenance . Maintenance of the turbine and exhaust components consists of repairing and replacing components as outlined in the specific engine maintenance manual.

k. Ignition System Maintenance . Maintenance of the ignition system consists primarily of cleaning, Inspection, and replacement of components as explained by the following paragraphs.

(1) Wiring harness . Perform wiring harness maintenance as explained by the following procedures:

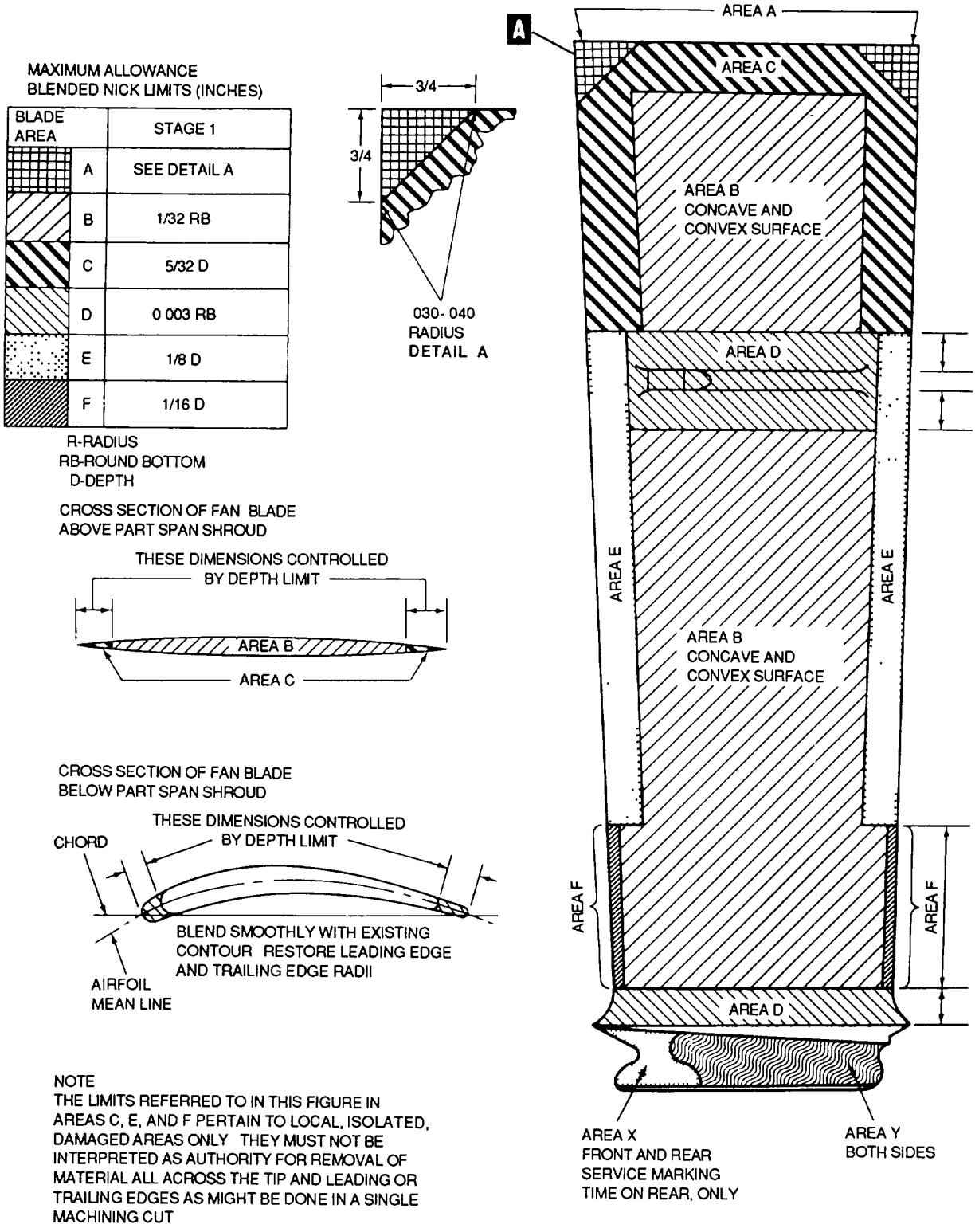

Figure 8-18. Typical Compressor Blade Repair Limits

WARNING

Isopropyl Alcohol, TT-I-735, is flammable and toxic to eyes, skin, and respiratory tract. Wear protective gloves and goggles/face shield. Avoid repeated or prolonged contact. Use only in well ventilated areas (or use approved respirator as determined by local safety/industrial hygiene personnel). Keep away from open flames, sparks, or other sources of ignition.

Cleaning solvent, HFE-71DE, is toxic to eyes, skin, and respiratory tract, and decomposes into other hazardous products when exposed to extreme heat. Wear chemical protective gloves and goggles/face shield. Avoid repeated or prolonged contact. Use only in well ventilated areas. If ventilation is not adequate, use approved respirator as determined by local safety/industrial hygiene personnel. Keep away from open flames, welding, or other sources of extreme heat.

(a) Clean lead assembly with Isopropyl Alcohol, TT-I-735, or HFE-71DE. Replace any lead having fraying shielding, bent or mutilated socket contacts or contact pins, and worn or stripped threads on coupling nuts.

NOTE

Minor chafing or fraying to the extent of not more than three broken strands in one inch of harness length is permissible, providing there is no damage to the underlying insulation.

(b) Clean control harness leads with Isopropyl Alcohol, TT-I-735 or HFE-71DE; dry with air blast. Replace harness when it is found to be open or shorted.

(2) Igniter plugs. Perform igniter plug maintenance as explained by the following procedures:

(a) Keep all igniter unit connections tight and all leads and conduit free from abrasions or other damage. Accomplish the following steps when igniter plugs fail to spark.

1 When two igniter plugs fail to spark, replace one plug and energize system. When plug sparks, replace other plug and retest. Replace igniter unit when plug fails to spark.

2 When one plug fails to spark and a new plug does not remedy defect, replace igniter plug lead. If plug still fails to spark, replace igniter unit.

(b) Igniter plugs not heard firing when engine is started shall be cleaned or replaced as follows:

1 Clean barrel of igniter plugs with a wire brush. Buff threads with a cloth wheel. Do not clean nose end and electrode.

2 Replace plugs with cracked insulation, damaged threads or pin contacts, or when foreign material is found lodged in nose of plug.

3 Replace igniter plugs that fail to produce continuous and regular sparking.

(3) Ignition exciter. Refer to the applicable maintenance manual for ignition exciter maintenance.

l. Turbine Bearing Maintenance. Turbine engine bearings shall be inspected, removed, and replaced in accordance with the applicable maintenance manual.

m. Thermocouple Maintenance. Replace thermocouple leads that indicate a short or an open condition. Clean carbon from thermocouples by dipping in carbon removing compound, MIL-C-19853, and wiping deposit away with a clean cloth.

n. Oil Consumption. Check oil consumption in accordance with the applicable maintenance manual. The following formula can be used to calculate oil consumption in cc per hour:

$$\frac{\text{cc of oil added}}{\text{Recorded operating time in minutes}} \times \frac{60 \text{ min}}{1 \text{ hr}}$$

= Oil consumption time in cc/hr

o. Fuel System. Fuel system maintenance shall be accomplished in accordance with the applicable maintenance manual. General maintenance procedures are described in the following paragraphs.

(1) Fuel control inspection and adjustment. Fuel control inspection and adjustment are explained in the following paragraphs.

(a) Fuel control inspection. Perform the following procedures when inspecting fuel controls:

1 Inspect housing for cracks and leakage.

2 Inspect strainer element for nicks, tears, punctures, and broken wires.

3 Inspect springs and balls for corrosion.

4 Inspect cover for nicks, dents, and scratches.

(b) Fuel control adjustment . Adjust fuel control in accordance with the applicable maintenance manual Typical adjustments are made to the following:

- Fuel selector
- Compressor rotor ground idle speed
- Air-bleed band closure
- Compressor rotor maximum speed
- Acceleration schedule

(2) *Fuel nozzle inspection and cleaning*. Inspect and clean fuel nozzles in accordance with the applicable maintenance manual and the following paragraphs.

(a) *Fuel nozzle inspection* . Inspect fuel nozzles in accordance with table 8-1.

Table 8-1. Inspection of Primer Nozzles

	Inspect	Usable limits	Max. repairable limits	Corrective action
1.	Primer nozzle tip for carbon	Any amount not clogging orifice.	Not repairable	Replace nozzle
2.	Inlet fitting for missing or damaged threads	Two threads total, missing or damaged, without high metal, if threads can be used without cross-threading	Two threads total, missing or damaged, that can be blended to usable limits	AVUM: Replace nozzle. AVIM: Chase threads.
3	Retaining nut for:			
a.	Cracks	None allowed	Not repairable	Replace retaining nut.
b.	Missing or damaged threads.	One thread total, missing or damaged, without high metal, If threads can be used without cross-threading	Not repairable	Replace retaining nut.
c.	Wrench damage on each corner of hex flats.	Any amount, without high metal, if wrench won't slip on nut.	Not repairable	Replace retaining nut.
d.	Distortion will fit on nut	Any amount if wrench	Not repairable.	Replace retaining nut
e.	Discoloration	Any amount	Not applicable.	Not applicable.
f.	Nicks and scratches, except on threads	Any number, 1/64 inch deep, without high metal.	Not repairable	Replace retaining nut.

(b) Fuel nozzle cleaning. Clean fuel nozzles using the following procedures:

WARNING

Degreasing Solvent, MIL-PRF-680, is combustible and toxic to eyes, skin, and respiratory tract, Wear protective gloves and goggles/face shield. Avoid repeated or prolonged contact. Use only in well ventilated areas (or use approved respirator as determined by local safety/industrial hygiene personnel). Keep away from open flames or other sources of ignition.

1 Clean using degreasing solvent and a brush.

2 Remove residue with a clean lint-free cloth.

WARNING

When using compressed air for cleaning, use approved protective equipment for eyes and face. Do not use more than 30 psig air pressure. Do not direct air toward yourself or another person. Failure to comply could result in injury to eyes or skin. In case of injury, get medical attention.

3 Blow filtered, compressed air through primer nozzle. Hold nozzle tip in water, and look for stream of air bubbles coming from orifices. The nozzle is clogged if there is no bubbling. Replace nozzle if clogged.

(3) Main fuel filter inspection and cleaning. Inspect and clean main fuel filter in accordance with the applicable maintenance manual and the following paragraphs.

(a) Main fuel filter inspection. Inspect the main fuel filter for cracks, corrosion, pitting, and element contamination.

(b) Main fuel filter cleaning. Clean filter with a cloth dampened in degreasing solvent. Dry using compressed air.

WARNING

DELETED

- When using compressed air for cleaning, use approved protective equipment for eyes and face. Do not use more than 30 psig air pressure. Do not direct airstream toward yourself or another person. Failure to comply could result in injury to eyes or skin.

(4) Fuel control filter inspection and cleaning. Inspect and clean fuel control filter in accordance with the applicable maintenance manual and the following paragraphs.

(a) Fuel control filter inspection. Inspect filter for tears, punctures, broken wires, dents, scratches, and corrosion.

(b) Fuel control filter cleaning. Clean filter using the procedures in paragraph (3)(b).

(5) Governor control inspection and adjustment. Inspect and adjust the governor control in accordance with the applicable maintenance manual.

8-7. REPLACEMENT CRITERIA FOR ENGINES AND COMPONENTS. Replacement criteria for engines and components are explained in the following paragraphs.

a. Engine Replacement Criteria. The following conditions require replacement of the engine:

- When scheduled replacement time is accumulated, as specified in the specific engine maintenance manual.
- When foreign objects enter air intake and damage compressor.
- When overspeeding occurs, inspection or replacement shall be as indicated in the specific engine maintenance manual.

- When hot starts or tall pipe temperatures exceed maximum allowable limit for given operating condition, inspection or replacement shall be accomplished in accordance with the applicable maintenance manual.

- When oil system is contaminated with metal particles, proceed as directed in the maintenance manual.

b. *Component Replacement. Criteria* Replace individual turbine engine components as specified In the applicable maintenance manual.

8-8. Marking of Defects on Turbine Engines . Defects In removed parts may be marked by use of a felt-tip marker.

8-9. Turbine Engine Mounts . A typical engine mounting system consists of bipod and tripod assemblies braced by tube assemblies. For specific details of the system, refer to engine section of the applicable maintenance manual. Repair bent, distorted, or chafed areas of mount as specified in the applicable maintenance manual. After repair of any component of engine mount, accomplish a thorough visual and magnetic particle inspection.

8-10. **Preservation and Depreservation of Turbine Engines**. The preservation and depreservation procedures for each type of turbine engine is specified In the applicable aircraft maintenance manual

8-11. **Removal and Installation of Turbine Engines.** Removal and installation of turbine engines is explained In the following paragraphs. Refer to the applicable maintenance manual.

a. Preparation for Removal . Accomplish the following general steps before removal.

(1) Adequately secure the aircraft either with wheel chocks or with tiedown provisions; attach ground wire or cable to aircraft.

(2) Open the nacelle doors and support them with the struts. Verify that no external power is connected to the aircraft and that the electric power switch is off.

(3) Remove the mount access plates from both sides of the nacelle structure.

(4) Remove the engine air-conditioning duct access plate, and disconnect the duct from the engine.

(5) Disconnect the turbine discharge pressure pickup line as shown in figure 8-19.

(6) Disconnect the electrical wiring and the thermocouple leads from the connectors as shown in figure 8-20.

(7) Disconnect the fuel line by removing the bolts from the hose flange as shown in figure 8-21..

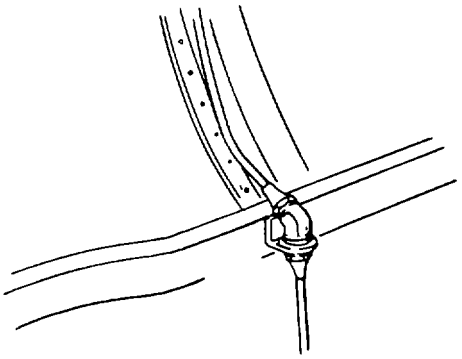

Figure 8-19. Turbine Discharge Pressure Pickup Line

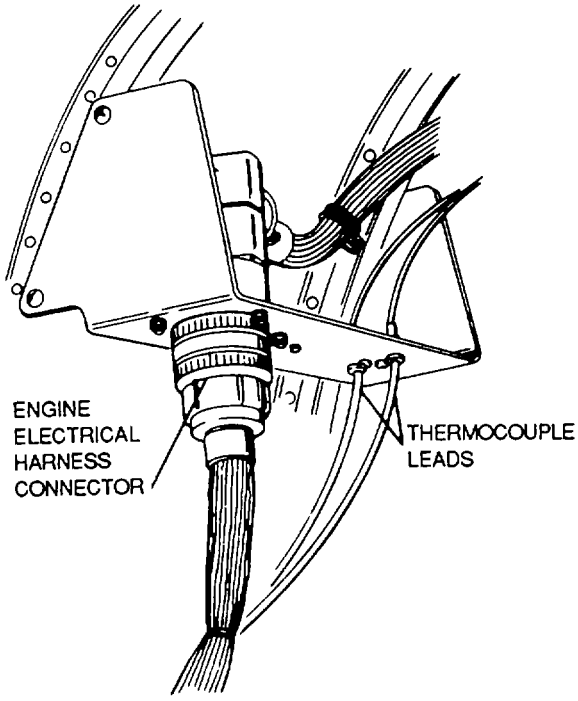

Figure 8-20. Electrical Disconnect

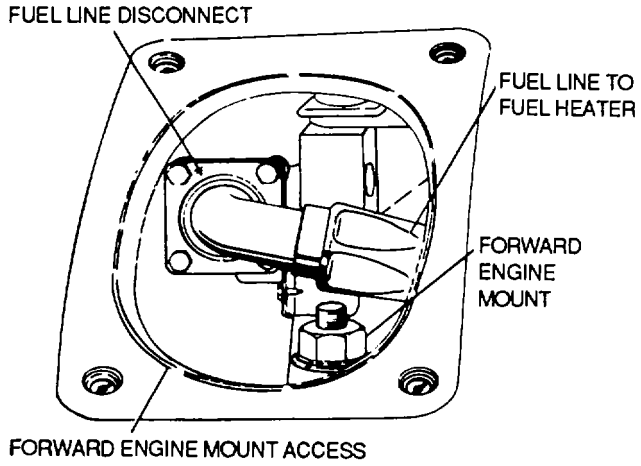

Figure 8-21. Fuel Line Disconnect

(8) Disconnect the power control rod, as shown in figure 8-22, from the power control lever cross-shaft linkage at the threaded end disconnect. Secure the power control rod to the nacelle structure.

b. Removal. The powerplant may be removed from the aircraft by either of the two methods. One method involves lowering the powerplant from the nacelle by using an engine dolly. The other method requires hoists and a special sling to lower the powerplant to a movable engine stand. Refer to the applicable aircraft maintenance manual.

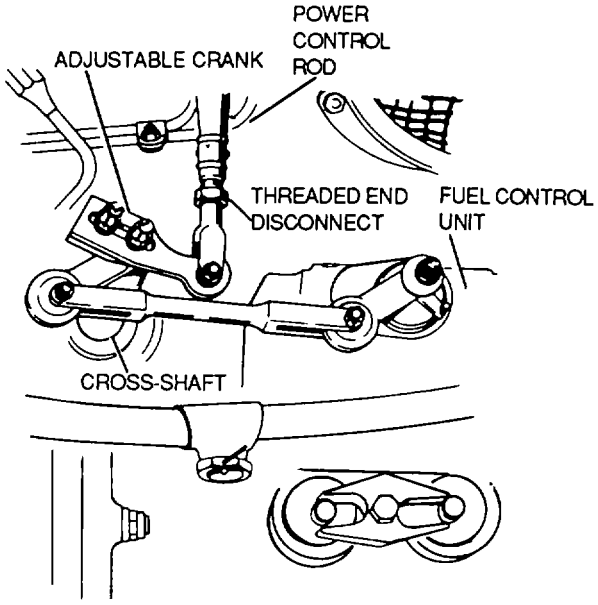

Figure 8-22. Power Lever Disconnect

c. Preparation for Installation. Installation of aircraft powerplants will be installed in accordance with the applicable maintenance manual.

d. Installation. Install engine in accordance with applicable maintenance manual.

CHAPTER 9

GENERAL AIRFRAME MAINTENANCE

9-1. General. The maintenance instructions and procedures contained in this chapter are general and applicable to airframe maintenance of Army aircraft. Maintenance instructions that are specific and peculiar to particular airframes are contained in the applicable maintenance manuals and will be used in conjunction with general information contained in this chapter.

9-2. Landing Gear Systems . The landing gear of an aircraft consists of main and auxiliary units, either of which may or may not be retractable. The main landing gear forms the principle support of the aircraft on land or water and may include any combination of wheels, floats, skis, shock-absorbing equipment, brakes, retracting mechanism with controls and warning devices, cowling, fairing, and structural members necessary to attach any of the foregoing to the primary structure. The auxiliary landing gear consists of tall or nose wheel Installations, outboard pontoons, skids, etc, with necessary cowling and reinforcement.

9-3. Retractable Landing Gear Systems. Retractable landing gear systems are explained in the following paragraphs.

a. *Types.* The electric and hydraulic landing gear retraction systems are explained in the following paragraphs.

(1) *Electric landing gear retraction system*. The electric landing gear retraction system is an electrically driven jack for raising or lowering the gear, as shown in figure 9-1. When a switch in the cockpit is moved to the UP position, the electric motor operates. Through a system of shafts, gears, adapters, an actuator screw, and a torque tube, a force is transmitted to the drag strut linkages. Thus, the gear retracts and locks **I**f the switch is moved to the DOWN position, the motor reverses and the gear moves down and locks.

(2) Hydraulic landing gear retraction system. Devices used In a typical hydraulically operated landing gear retraction system include actuating cylinders, selector valves, uplocks, downlocks, sequence valves, turbine, and other conventional hydraulic components. These units are interconnected so that they permit properly sequenced retraction and extension of the landing gear and the landing gear doors. Figure 9-2 shows a typical hydraulic landing gear retraction system.

b. *Emergency Extension Systems*. The emergency extension system lowers the landing gear if the main power system fails. Some aircraft have an emergency release handle in the cockpit, which is connected through a mechanical linkage to the gear uplocks. When the handle is operated, it releases the uplocks and allows the gear to free-fall, or extend, under their own weight. On other aircraft, release of the uplock is accomplished using compressed air which IS directed to uplock release cylinders. Some installations are designed so that either hydraulic fluid or compressed air provides the necessary pressure, while others use a manual system for extending the landing gears under emergency conditions. Hydraulic pressure for emergency operation of the landing gear may be provided by an auxiliary hand pump, an accumulator, or an electrically powered hydraulic pump, depending upon the design of the aircraft.

c. *Safety Devices.* Accidental retraction of a landing gear may be prevented by such safety devices as mechanical downlocks, safety switches, and ground locks. Mechanical downlocks are built-in parts of a gear-retraction system and are operated automatically by the gear-retraction system. To prevent accidental operation of the downlocks, electrically operated safety switches are Installed.

(1) *Safety switch*. A landing gear safety switch, as shown In figure 9-3, in the landing gear safety circuit is usually mounted in a bracket on one of the main gear shock struts. This switch is actuated by a linkage through the landing gear torque links. The torque links spread apart or move together as the shock strut piston extends or retracts in its cylinder. When the strut is compressed (aircraft on the ground), the torque links are close together, causing the adjusting links to open the safety switch. During takeoff, as the weight of the aircraft leaves the struts, the struts and torque links extend, causing the adjusting links to close the safety switch. As shown in figure 9-3, a ground is completed when the safety switch closes. The solenoid then

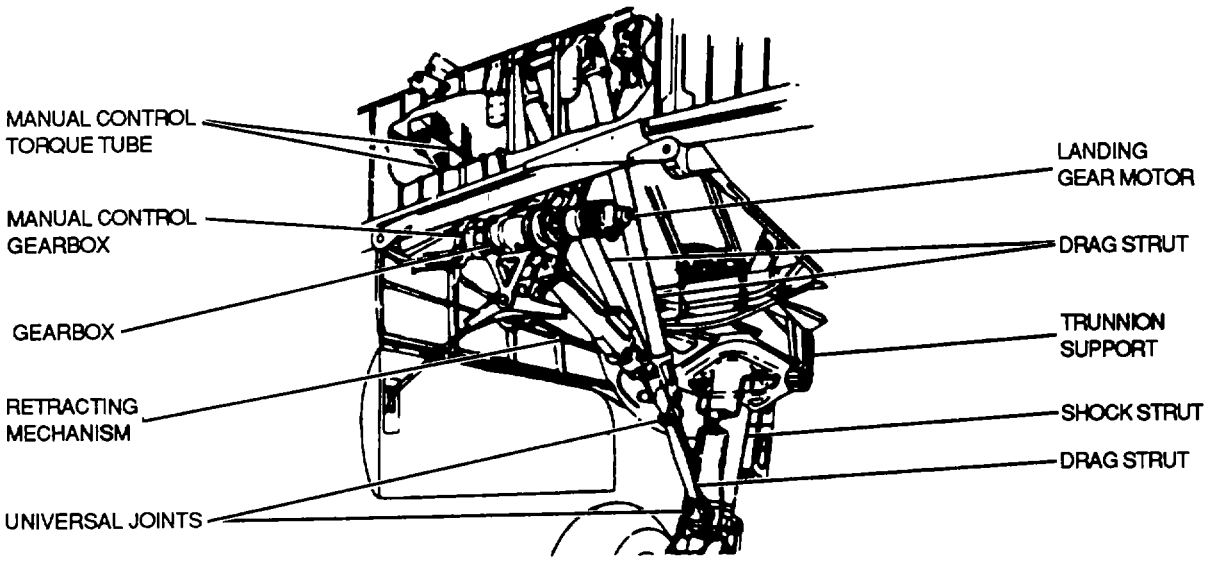

Figure 9-1. Electric Retraction System

energizes and unlocks the selector valve so that the gear handle can be positioned to raise the gear.

(2) *Ground locks* . Ground locks prevent landing gear collapse when the aircraft is on the ground. One common type is a pin installed In aligned holes drilled in two or more units of the landing gear support structure. Another type is a spring-loaded clip designed to fit around and hold two or more units of the support structure together. All types of ground locks usually have red streamers permanently attached to them to readily indicate whether or not they are installed.

d. *Gear Position Indicators.* To provide a visual indication of landing gear position, indicators are installed in the cockpit or flight compartment. Gear warning devices are incorporated on all retractable gear aircraft and usually consist of a horn or some other aural device and a red warning light.

e. *Nosewheel Centering*. Aircraft are commonly provided nosewheel steering capabilities through a simple system of mechanical linkage hooked to the rudder pedals. Most common applications utilize pushpull rods to connect the pedals to horns located on the pivotal portion of the nosewheel strut.

f. *Retraction Test.* Inspect landing gear for obvious damage, then accomplish retraction test, inspecting for the following items.

- Landing gear for proper retraction and extension.
- Switches, lights, and warning horn for proper operation.
- Landing gear doors for clearance and freedom from binding.
- Landing gear linkage for proper operation, adjustment, and general condition.
- Latches and locks for proper operation and adjustment.
- Alternate extension or retraction systems for proper operation.
- Any unusual sounds such as those caused by rubbing, binding, chafing, or vibration.

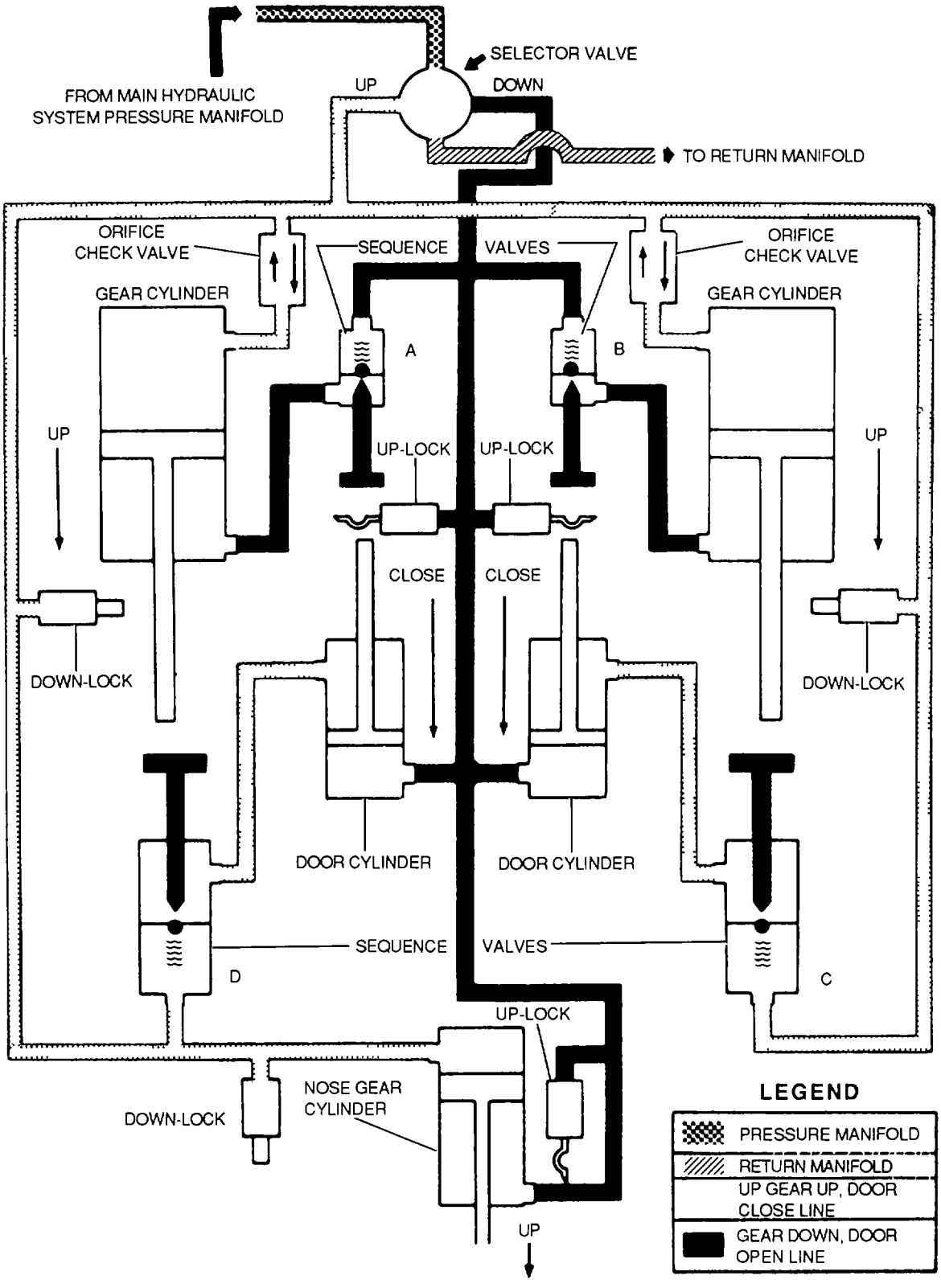

Figure 9-2. Hydraulic Landing Gear Retraction System Schematic

9-4. Troubleshooting of Landing Gear Systems. The troubleshooting procedures for electrical and hydraulic landing gear systems is in the applicable maintenance manuals.

9-5. Shock Struts. Shock struts, as shown in figures 9-4 and 9-5, are self-contained hydraulic units that support an aircraft on the ground and protect the aircraft structure by absorbing and dissipating the tremendous shock loads of landing. Shock struts must be inspected and serviced regularly to function efficiently.

a. *Shock Strut Operation.* The compression stroke of the shock strut begins as the aircraft wheels touch the ground, the center of mass of the aircraft continues to move downward, compressing the strut and sliding the inner cylinder into the outer cylinder. The metering pin is forced through the orifice and, by its variable shape, controls the rate of fluid flow at all points of the compression stroke. In this manner the greatest possible amount of heat is dissipated through the walls of the shock strut. At the end of the downward stroke, the compressed air Is further compressed, limiting the compression stroke of the strut. The extension stroke occurs at the end of the compression stroke as the energy stored in the compressed air causes the aircraft to start moving upward in relation to the ground and wheels. At this instant, the compressed air acts as a spring to return the strut to normal. It is at this point that a snubbing or damping effect is produced by forcing the fluid to return through the restrictions of the snubbing device (See figure 9-6).

b. *Shock Strut Servicing*. The following procedures are typical of those used in deflating a shock strut, servicing with hydraulic fluid, and reinflating.

(1) Position the aircraft so the shock struts are in the normal ground operating position. Make certain that personnel, workstands, and other obstacles are clear of the aircraft. (Some aircraft must be placed on lacks to service the shock struts).

(2) Remove the cap from the air valve.

(3) Check the swivel hex nut for tightness with a wrench.

WARNING

Always stand to one side of the valve, since high-pressure air can cause serious injury, e.g., loss of eyesight .

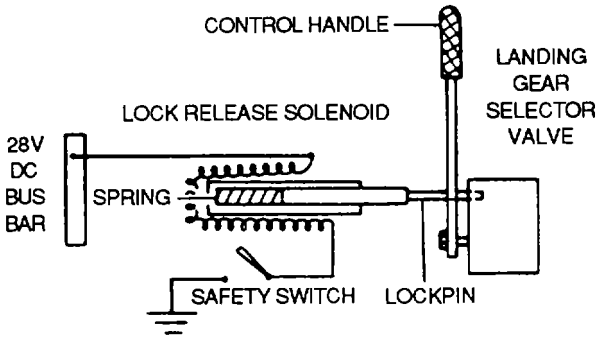

Figure 9-3. Landing Gear Safety Circuit

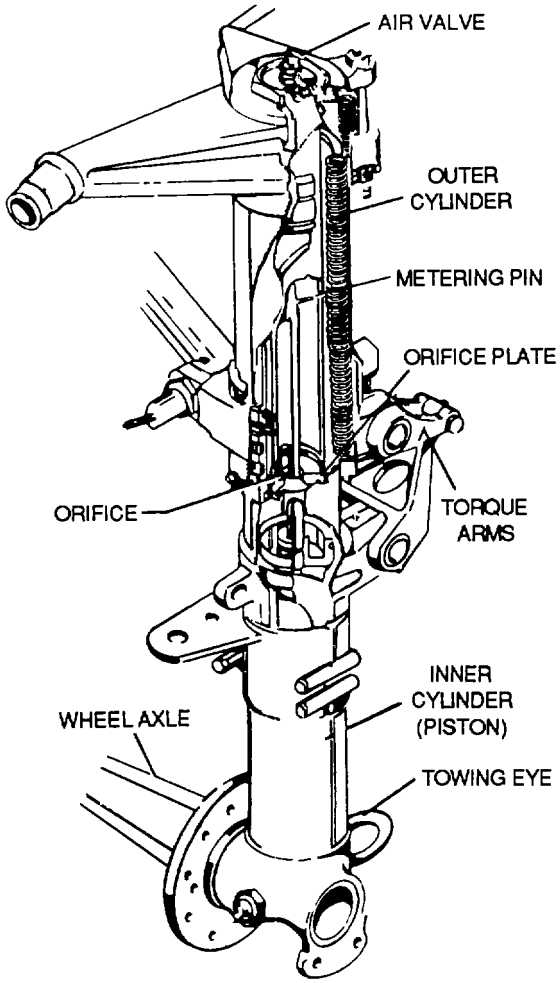

Figure 9-4. Landing Gear Shock Strut of the Metering Pin Type

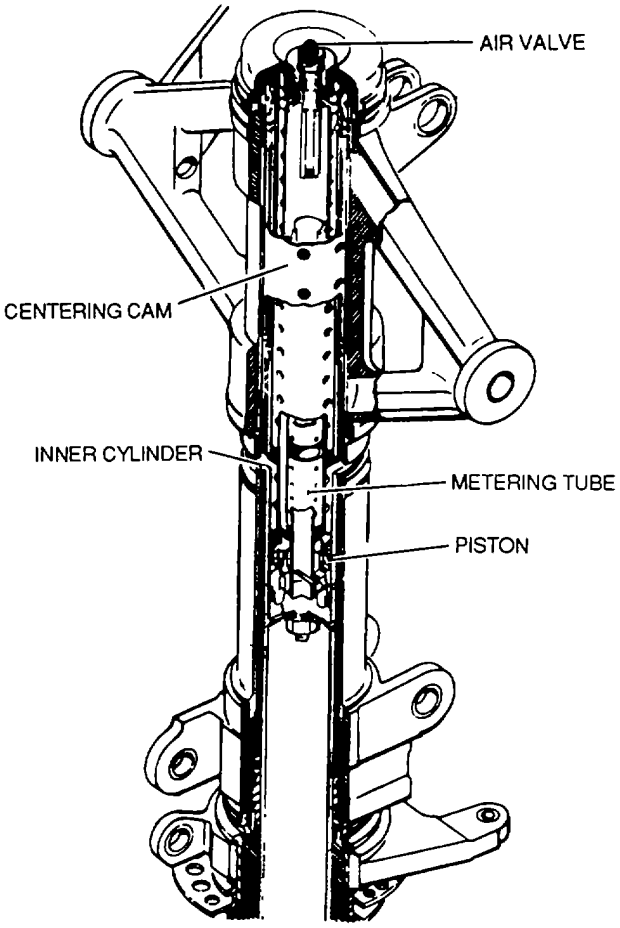

Figure 9-5. Landing Gear Shock Strut of the Metering Tube Type

(4) If the air valve is equipped with a valve core, release any air pressure that may be trapped between the valve core and the valve seat by depressing the valve core.

(5) Remove the valve core.

(6) Release the air pre ssure In the strut by slowly turning the swivel nut counterclockwise.

(7) Ensure that the shock strut compresses as the air pressure is released. In some cases, it may be necessary to rock the aircraft after deflating to ensure compression of the strut.

(8) When the strut is fully compressed, the air valve assembly may be removed.

(9) Fill the strut to the level of the air valve opening with an approved type of hydraulic fluid.

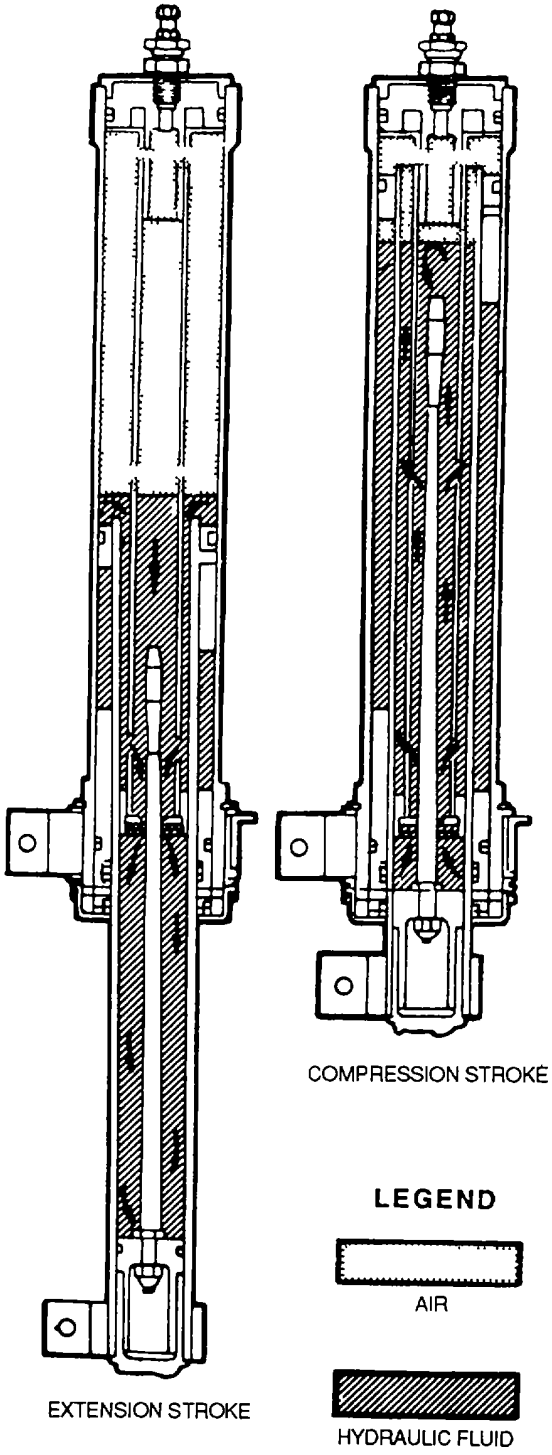

Figure 9-6. Shock Strut Operation

(10) Re-install the air valve assembly, using a new O-ring packing. Torque the air valve assembly to the values recommended in the applicable maintenance manual.

(11) Install the air valve core.

(12) Inflate the strut, using a high-pressure source of dry air or nitrogen.

NOTE

Bottled gas should not be used to inflate shock struts. On some shock struts the correct amount of inflation is determined by using a high-pressure air gauge. On others it is determined by measuring the amount of extension (in inches) between two given points on the strut. The proper procedure can usually be found on the instruction plate attached to the shock strut. Shock struts should always be inflated slowly to avoid excessive heating and over inflation.

(13) Tighten the swivel hex nut, using the torque values specified in the applicable maintenance manual.

(14) Remove the high-pressure air line chuck and Install the valve cap Tighten the valve cap finger-tight.

c. *Shock Strut Bleeding* . If the fluid level of a shock strut has become extremely low, or if for any other reason air is trapped in the strut cylinder, it may be necessary to bleed the strut during the servicing operation. Bleeding is usually performed with the aircraft placed on jacks. In this position the shock struts can be extended and compressed during the filling operation, thus expelling all the entrapped air. The following is a typical bleeding procedure:

(1) Construct a bleed hose containing a fitting suitable for making an airtight connection to the shock strut filler opening. The base should be long enough to reach from the shock strut filler opening to the ground when the aircraft is on jacks.

(2) Jack the aircraft until all shock struts are fully extended.

(3) Release the air pressure in the strut to be bled.

(4) Remove the air valve assembly.

(5) Fill the strut to the level of the filler port with an approved type hydraulic fluid.

(6) Attach the bleed hose to the filler port and insert the free end of the hose into a container of clean hydraulic fluid, making sure that this end of the hose is below the surface of the hydraulic fluid.

(7) Place an exerciser jack or other suitable single-base jack under the shock strut jacking point. Compress and extend the strut fully by raising and lowering the jack until the flow of air bubbles from the strut has completely stopped. Compress the strut slowly and allow it to extend by its own weight.

(8) Remove the exerciser jack, and then lower and remove all other jacks.

(9) Remove the bleed hose from the shock strut.

(10) Install the air valve and inflate the strut.

d. *General Maintenance of Shock Struts* . All maintenance personnel should study all technical manuals which pertain directly to the shock strut in question, or aircraft maintenance publications which have a portion of the Instructions devoted to the particular shock strut in question. General maintenance for pneumatic, rubber block, and spring steel shock struts is described in the following paragraphs.

(1) *Pneumatic type* . Use the following procedures for maintenance of pneumatic type shock struts.

(a) Clean the exposed part of the piston tube using the following procedures.

NOTE

Cleaning of piston tubes reduces excessive wear and possible failure of shock strut packing rings.

1 Remove ice, mud, dust, or sand, then wipe using a clean cloth saturated with hydraulic fluid MIL-H-5606.

2 When extreme Ice, dust, mud or sand conditions are encountered, wipe piston tubes before and after each flight.

3 When operating aircraft in freezing temperatures, piston tube can be cleaned more easily.

Immediately after landing, as ice will form on tube when aircraft is left standing without tube being cleaned of water, mud and slush.

(b) Maintain proper air-oil levels in struts as specified on data plates. Use hydraulic fluid, MIL-H5606.

(c) Replace pistons having nicks, scratches, or dents deep enough to cause leakage. Replace elongated bushings. Replace struts that have cracked fittings.

(d) When overhauling a pneumatic shock strut, all ferrous metal parts will be magnetic particle Inspected for cracks and flaws. Inspection will be accomplished in accordance with applicable maintenance manual.

(2) *Rubber block type.* Replacement of compression and rebound rubber blocks, or adjustment of preload tubes shall be as specified in applicable aircraft maintenance manual

(3) *Spring steel type.* Repairs are limited to burnishing minor nicks, burrs, or scratches Replace cracked struts.

9-6. Landing Gear Alignment. The alignment of aircraft landing gear is too critical, and the tolerances too narrow to deal with the subject in a general manner. Reference will be made to applicable aircraft maintenance manual for specific data relating to landing gear alignment.

9-7. Brake Systems. Brake system types and general maintenance are explained In the following paragraphs.

a. *Brake Types*. The three types of brake systems in general use are the independent, power control, and power boost systems. Each is explained in the following paragraphs.

(1) *Independent systems.* In general, the independent brake system is used on small aircraft. This type of brake system is termed independent because it has its own reservoir and is entirely independent of the aircraft main hydraulic system. Independent brake systems are powered by master cylinders similar to those used in the conventional automobile brake system. The system is composed of a reservoir, one or two master cylinders, mechanical linkage which connects each master cylinder with its corresponding brake pedal, connecting fluid lines, and a brake assembly in each main landing gear wheel as shown in figure 9-7..

(2) *Power control systems.* Power brake control valve systems, as shown in figure 9-8, are used on aircraft requiring a large volume of fluid to operate the brakes. As a general rule, this applies to many large aircraft. Because of their weight and size, large wheels and brakes are required. Larger brakes mean greater fluid displacement and higher pressures, and for this reason independent master cylinder systems are not practical on heavy aircraft. In this system a line is tapped off from the main hydraulic system pressure line.

(3) *Power boost systems.* A typical power boost brake system, as shown in figure 9-9, consists of a reservoir, two power boost master cylinders, two shuttle valves, and the brake assembly in each main landing wheel. In this type of system, a line is tapped off the main hydraulic system pressure line, but main hydraulic system pressure does not enter the brakes. Main system pressure is used only to assist the pedals through the use of power boost master cylinders.

b. *Brake Assemblies.* Brake assemblies commonly used on aircraft are the single-disk, dual-disk. The single and dual-disk types are more commonly used on small aircraft.

(1) *Single-disk brakes.* With the single-disk brake, braking is accomplished by applying friction to both sides of a rotating disk which is keyed to the landing gear wheel. There are several variations of the single-disk brake, however, all operate on the same principle and differ mainly In the number of cylinders

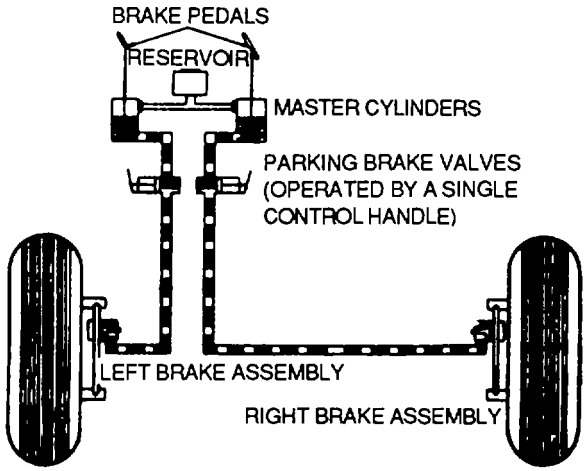

Figure 9-7. Independent Brake System

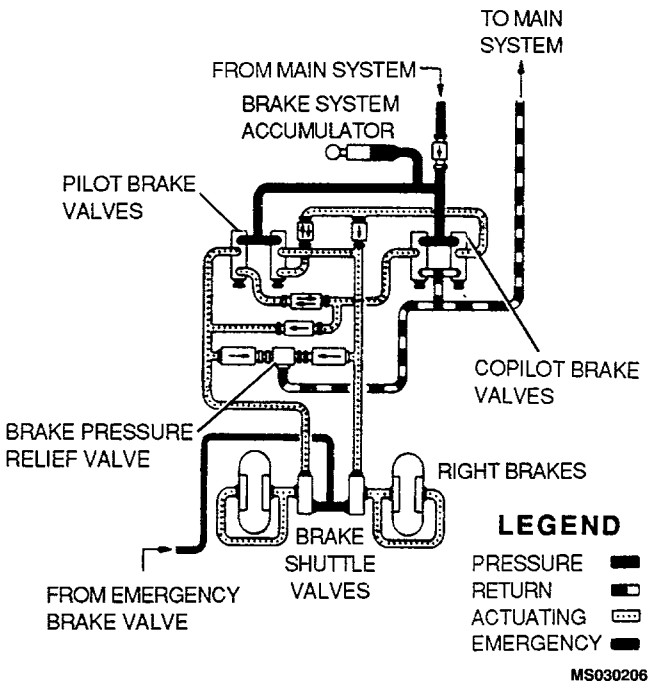

Figure 9-8. Power Control Brake System

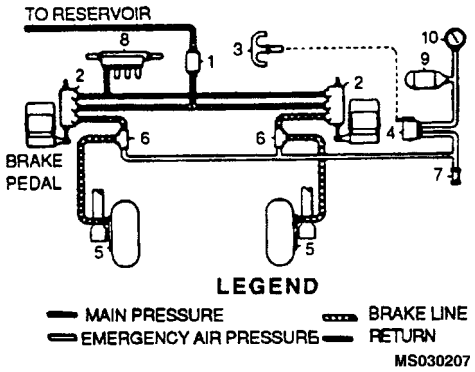

1 BRAKE RESERVOIR
2 POWER BOOST MASTER CYLINDER
3 EMERGENCY BRAKE CONTROL
4 AIR RELEASE VALVE
5 WHEEL BRAKE
6 SHUTTLE VALVE
7 AIR VENT
8 MAIN SYSTEM PRESSURE MANIFOLD
9 EMERGENCY AIR BOTTLE
10 EMERGENCY AIR GAUGE

Figure 9-9. Power Boost Brake System

and the type of brake housing. Brake housings may be either the one-piece or divided type. Figure 9-10 shows a a single-disk brake installed on an aircraft, with the wheel removed. The brake housing is attached to the landing gear axle f ange by mounting bolts.

(2) Dual-disk brakes. Dual-disk brakes are used on aircraft when more braking friction is desired. The dual-disk brake is very similar to the single-disk type, except that two rotating disks instead of one are used.

WARNING

Degreasing Solvent, MIL-PRF-680, is combustible and toxic to eyes, skin, and respiratory tract. Wear protective gloves and goggles/face shield. Avoid repeated or prolonged contact. Use only in well ventilated areas (or use approved respirator as determined by local safety/industrial hygiene personnel). Keep away from open f ames or other sources of ignition.

c. Brake Assembly Cleaning. Disassemble brake assembly and clean parts with Degreasing Solvent, MIL-PRF-680. Clean using a brush or air spray. Remove all blistered, chipped, or loose paint.

d. Brake Assembly Inspection. Inspect brake assemblies using the following general procedures:

(1) Visually inspect brake housing throughly for cracks, chipped or worn mounting holes, stripped threads, and corrosion.

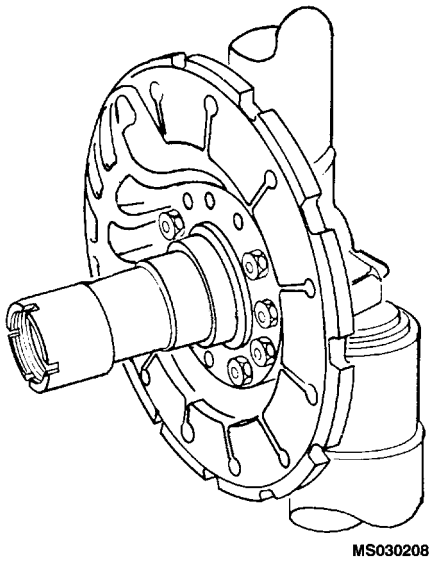

Figure 9-10. Single-Disk Brake

(2) Inspect lining recesses in piston, center carrier, and anvil for indications of wear which could cause loss of lining. Wear of anvil lining recess circumference in excess of 0.005 inch is cause for replacement.

(3) Examine piston cavity for corrosion, excessive wear, or for being out-of-round. When light corrosion extends more than 9/16 inch into piston cavity, or heavy corrosion is evident, replace brake assembly.

NOTE

Corrosion is usually found in carrier housing and in piston cavities. Corrosion in magnesium can be identified by the rough honeycombed appearance of the pit. Pits are usually filled with a yellow or gray powder. Heavy corrosion is defined as pits that exceed 0.025 inch in diameter or grouped with three or more pits of any diameter in an area of ¼ inch square.

e. Corrosion Treatment of Brake Assemblies. Brake assemblies are manufactured from magnesium, aluminum, and steel. Most assemblies have magnesium housings which are very susceptible to corrosion, especially in piston cavities. Treat the surface using the following procedures:

(1) Remove sharp edges of corrosion pits with crocus cloth, Federal Specification P-C-458, lubricated with hydraulic fluid, MIL-H-5606 .

(2) Rework minor dents, nicks, burrs, or gouges to break all sharp edges of indentations which might result in a concentration of stress. Use a smooth cut hand file to accomplish this, followed by fine abrasive paper, Federal Specification P-P-101, to remove tool marks.

(3) Condemn brake assemblies that have deep scratches, gouges, or cracks exceeding limits established in applicable aircraft maintenance manual.

(4) Accomplish surface treatment as outlined in TM 43-0105.

f. Repair and Replacement of Brake Assembly Components. Repair or replace brake assembly components in accordance with the applicable maintenance manual and the following general procedures:

CAUTION

Care must be used when installing seals and cups to prevent damage to feathered edges.

(1) Replace all seals, cups, and O-rings on an availability basis when assembling brakes to prevent possible leakage and brake failure.

(2) Apply a light coat of insulating and sealing compound, MIL-I-8660, to surface of piston cavity and to O-ring or cup seal.

(3) Replace disks that have cracks extending through disc. Any single crack that extends through thickness of brake disk shall be reason for replacement. Minor surface cracks and heat checks are normal and are not cause for replacement.

(4) When necessary to replace one lining because of wear, all linings shall be replaced. Replace linings when any lining thickness is less than 1/16 inch, or shows indications of being overheated.

g. Brake Assembly Servicing. Service brake assemblies in accordance with the applicable maintenance manual. The following are general procedures for all aircraft.

(1) Check for leaks while system is under operating pressure.

NOTE

Tighten loose fittings with the pressure off.

(2) Check all flexible hoses carefully for swelling, cracking, or soft spots, and replace if evidence of deterioration is noted.

(3) Maintain the proper fluid level at all times to prevent brake failure or the introduction of air into the system.

h. Bleeding Brakes. Air in the system is indicated by a spongy action of the brake pedals. If air is present in the system, remove it by bleeding the system. There are two general methods of bleeding brake system. Bleeding from the top downward (gravity method) and bleeding from the bottom upward (pressure method). Each method is explained in the following paragraphs.

(1) Gravity method. A bleeder hose is attached to the bleeder valve, and the free end of the hose is placed in a receptacle containing enough hydraulic fluid to cover the end of the hose, as shown in figure 9-11. The air-laden fluid is then forced from the system by operating the brake. If the brake system is a part of the main hydraulic system, a portable hydraulic test stand may be used to supply the pressure. If the system is an independent master cylinder system, the master cylinder will supply the necessary pressure. In either case, each time the brake pedal is released the bleeder valve must either be closed or the bleeder hose pinched off; otherwise, more air will be drawn back into the system. Bleeding should continue until no more air bubbles come through the bleeder hose into the container.

(2) Pressure method. In the pressure method, the air is expelled through the brake system reservoir or other specially provided location. Some aircraft have a bleeder valve located in the upper brake line. In using this method of bleeding, pressure is applied using a bleed tank, as shown in figure 9-12. A bleed tank is a portable tank containing hydraulic fluid under pressure. The bleeder tank is equipped with an air valve, air gauge, and a connector hose. The connector hose attaches to the bleeder valve on the brake assembly and is provided with a shutoff valve. Perform this method of bleeding strictly in accordance with the specific aircraft maintenance manual.

j. Brake System Safety. Follow all safety precautions given by the applicable maintenance manual. If it is necessary to approach a wheel with a hot brake, do so either from directly in front or directly behind the aircraft.

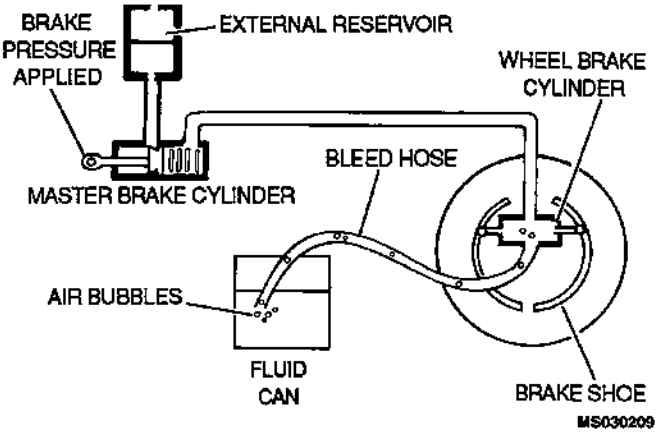

Figure 9-11. Gravity Method of Bleeding Brakes

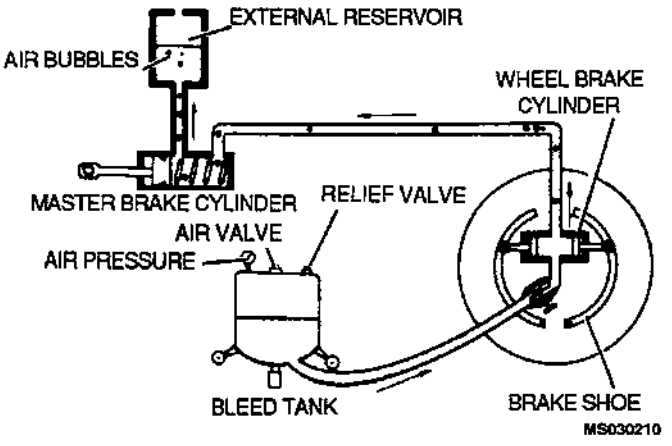

Figure 9-12. Pressure Method of Bleeding Brakes

9-8. Wheel Maintenance. Aircraft wheels are manufactured from magnesium, aluminum, or steel alloy. These materials are susceptible to corrosion, scoring, and gouging. Corrosion contributes to the high replacement rate of wheels. Paint coatings should be maintained in good condition to prevent corrosion. Fatigue cracks and complete wheel failure can result from inadequate corrosion control, as well as scratches and tool marks in critical stress areas. Care should be taken to ensure proper usage of tools. Maintain wheels using the following paragraphs.

a. Wheel Cleaning. The following procedures describe wheel cleaning:

(1) Remove tire, tube, and bearing and disassemble the wheel. See TM 55-2620-200-24 for demounting procedure.

WARNING

Degreasing Solvent, MIL-PRF-680, is combustible and toxic to eyes, skin, and respiratory tract. Wear protective gloves and goggles/face shield. Avoid repeated or prolonged contact. Use only in well ventilated areas (or use approved respirator as determined by local safety/industrial hygiene personnel). Keep away from open flames or other sources of ignition.

(2) Wash demounted wheel in degreasing solvent, MIL-PRF-680.

NOTE

Bearings should be cleaned and repacked if wheel is removed or was submerged in water.

b. *Wheel Inspection.* Inspect aircraft wheels for corrosion, cracks, distortion and damage using the following procedures:

(1) Visually Inspect wheel thoroughly for signs of corrosion, which can be identified by formation of pits in the metal and a powdery substance in and around exposed areas. Corrosion in split type wheel usually will be found in the tie bolt area, torque key area, bearing cavity area, and seal (tubeless tire) area. Corrosion in these areas is considered critical.

(2) Visually inspect wheel for indications of cracks, using at least a six-power magnifying glass.

(3) Visually Inspect for distortion and other damage.

c. *Repair of Wheels*. Repair aircraft wheels in accordance with the applicable maintenance manual and the following procedures.

(1) Etching, corrosion, and minor defects are to be removed to relieve all sharp corners or indention's which might result in concentration of stresses. Use 100-grit emery cloth, followed by final polishing with 240 grit emery cloth so as to maintain repair limitations.

NOTE
Above rework limits are for use on all wheels which do not have repair limitations in the specific aircraft maintenance manual.

(2) Chemical film-treat bare metal surfaces, followed by painting.

d. *Replacement Cntena for Wheels*. Replacement criteria for wheels with corrosion, cracks, distortion, and other damage is explained in the applicable maintenance manual.

(1) *Corrosion*. Wheel Is unserviceable If it cannot be repaired within limits specified in applicable maintenance manual.

(2) *Cracks*. If any cracks are found, wheel should be condemned. If any questionable indication of a crack is found, wheel should be inspected further by means of fluorescent penetrants. Cracks present in spilt-type wheel usually are located In the tie bolt area, torque key area, and webbing and spoke area. Refer to TM 55-1500-335-23, Nondestructive Inspection Methods.

(3) *Distortion*. Check wheel carefully for distortion Replace any wheel with this condition.

(4) *Damage*. Replace any wheel having dents, nicks, burrs, or scratches if the damage cannot be repaired within limits specified in applicable maintenance manual.

NOTE
If one wheel half is determined nonrepairable, replace both halves.

9-9. Tires and Tubes . Aircraft tires, tubeless or tube type, provide a cushion of air that helps absorb the shocks and roughness of landings and takeoffs they support the weight of the aircraft while on the ground and provide the necessary traction for braking and stopping aircraft on landing.

a. *Cleaning.* Clean aircraft tires and tubes in accordance with the applicable maintenance manual.

b. *Inspection*. Inspection of tires and tubes is explained In the following paragraphs.

(1) *Tire Inspection.* Inspect tires for leaks or damage at valve, tread damage, sidewall damage, and uneven wear when tire is mounted on wheel. When tire is dismounted probe all damages to determine their extent. Repair damage if necessary. Inspect for bulges, broken cords, and bead damage.

(2) *Tube inspection.* Inspect tubes for proper size, wrinkles, chafing, and thinning. Examine the tube carefully around the valve stem for leaks, signs of valve pad separation, and bent or damaged valve stems.

c. *Balance*. Balance in aircraft tires and tubes is very important. From a wear standpoint, when the wheels are in landing position a heavy spot in a wheel assembly will have a tendency to remain at the bottom and thus will always strike the ground or runway first. This results in severe wear at one area of the tire tread and can necessitate early replacement In addition, unbalanced tires can cause severe vibration which may affect the operation of the aircraft.

d. *Valve Cores.* Valve cores must be replaced if leaks are present in the valve stem. Always inspect the valve to be sure the threads are not damaged; otherwise, the valve core and valve cap will not fit properly. If threads are damaged, the valve can usually be rethreaded, inside or outside, by use of a valve repair

tool, without demounting the tire from the wheel. Make certain that every valve has a valve cap on it, screwed on firmly with the fingers. The cap prevents dirt oil and moisture from getting inside the valve and damaging the core. It also seals In air and serves as protection in case a leak develops in the valve core.

e. *Installation*. Install tires and tubes in accordance with the applicable maintenance manual.

9-10. Ski Maintenance. Maintenance of skis shall be as specified In the applicable aircraft maintenance manual and the following paragraphs.

a. *Ski Inspection.* It is advisable to examine ski installations frequently to keep them maintained in airworthy condition. If shock cord is used to keep the ski runner in proper trim, periodically examine to assure that the cord has enough elasticity to keep the runner in its required attitude and the cord is not becoming loose or badly frayed. Replace old or weak shock cords. When other means of restraint are provided, examine for excessive wear and binding, and replace or repair when such conditions are found. Examine the points of cable attachment, both on the ski and the airplane structure, for bent lugs due to excessive loads having been imposed while taxiing over rugged terrain, or by trying to break loose frozen skis. If skis which permit attachment to the wheels and tires are used, maintain proper tire pressure, as under inflated tires may push off the wheels. if appreciable side loads are developed in landing or taxiing.

b. Ski Repair. Aluminum tubular members may have negligible damage of surface scratches and smooth contour dents not over 1/16 Inch in depth. All damage, other than negligible, shall necessitate replacement unless otherwise specified in applicable aircraft maintenance manual. Steel tubular members may have negligible damage of surface scratches and small dents not over 0.004 inch in depth. Repairable damage shall consist of straightening slight bends and rewelding existing welds.

9-11. Float Maintenance. In order to maintain floats in an airworthy condition, frequent inspections should be made because of the rapidity with which corrosion takes place on aluminum alloy metal parts, particularly when the aircraft Is operated in salt water. Examine metal floats and all metal parts on wooden or fiberglass floats for corrosion and take corrective action in accordance with the applicable aircraft maintenance manual. All maintenance of floats shall be as specified in the applicable aircraft maintenance manual.

9-12. Flight Controls . The flight control surfaces are hinged or movable airfoils designed to change the attitude of the aircraft during flight. Maintenance of flight controls shall be accomplished by replacing worn, damaged, or defective components, adjusting rigging components, and accomplishing preventive maintenance to the system.

a. *Types.* Ailerons, elevators, the rudder, flaps, and trim tabs are the common types of flight controls. Each is explained in the following paragraphs.

(1) *Ailerons*. The motion of the aircraft about the longitudinal axis is called rolling or banking. The ailerons, as shown in figure 9-13, are used to control this movement. The ailerons form a part of the wing and are located in the trailing edge of the wing toward the tips. Ailerons are the movable surfaces of an otherwise fixed-surface wing. The aileron is in neutral position when it is streamlined with the trailing edge of the wing.

(2) *Elevators.* When the nose of an aircraft is raised or lowered, it is rotated about its lateral axis. Elevators are the movable control surfaces that cause this rotation, as shown in figure 9-14. They are normally hinged to the trailing edge of the horizontal stabilizer. The elevator can be moved either up or down. If the elevator is rotated up, it decreases the lift force on the tail causing the tail to lower and the nose to rise. If the elevator is rotated downward, it increases the lift force on the tail, causing it to rise and the nose to lower. Lowering the aircraft's nose increases forward speed, and raising the nose decreases forward speed.

(3) *Rudder*. Turning the nose of the aircraft causes the aircraft to rotate about its vertical axis. Rotation of the aircraft about the vertical axis is called yawing. This motion is controlled by using the rudder as shown In figure 9-15..

(4) Flaps. Flaps are high-lift devices attached to the trailing edge of the wing. The flap is controlled from the cockpit, and when not in use fits smoothly into the lower surface of each wing. The use of flaps increases the camber of a wing and therefore the lift of the wing, making it possible for the speed of the aircraft to be decreased without stalling. This also permits a steeper gliding angle to be obtained such as in the landing approach. Flaps are primarily used during takeoff and landing. Figure 9-16 shows various types of flaps used on aircraft.

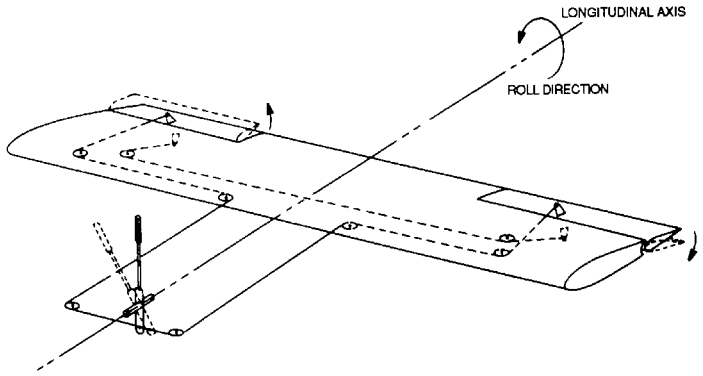

Figure 9-13. Aileron Action

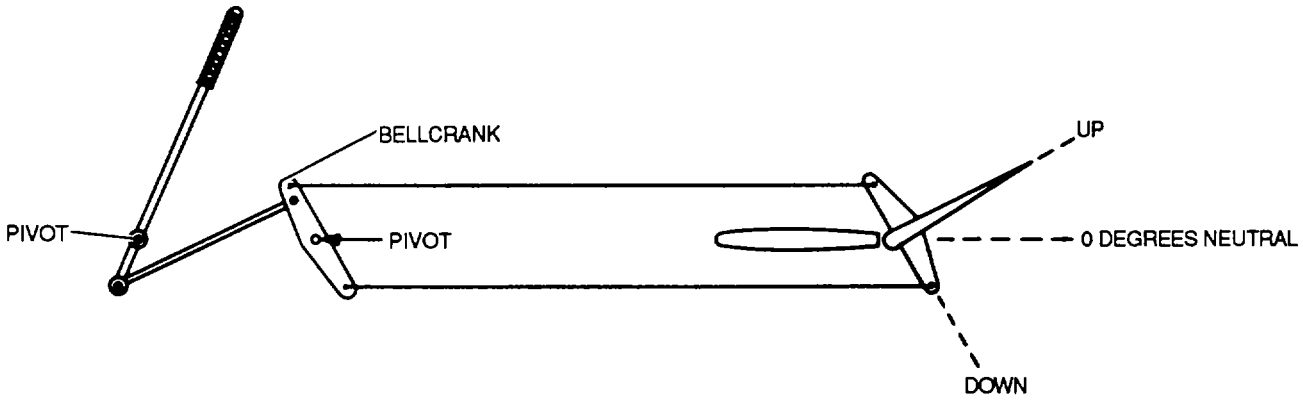

Figure 9-14. Elevator Action

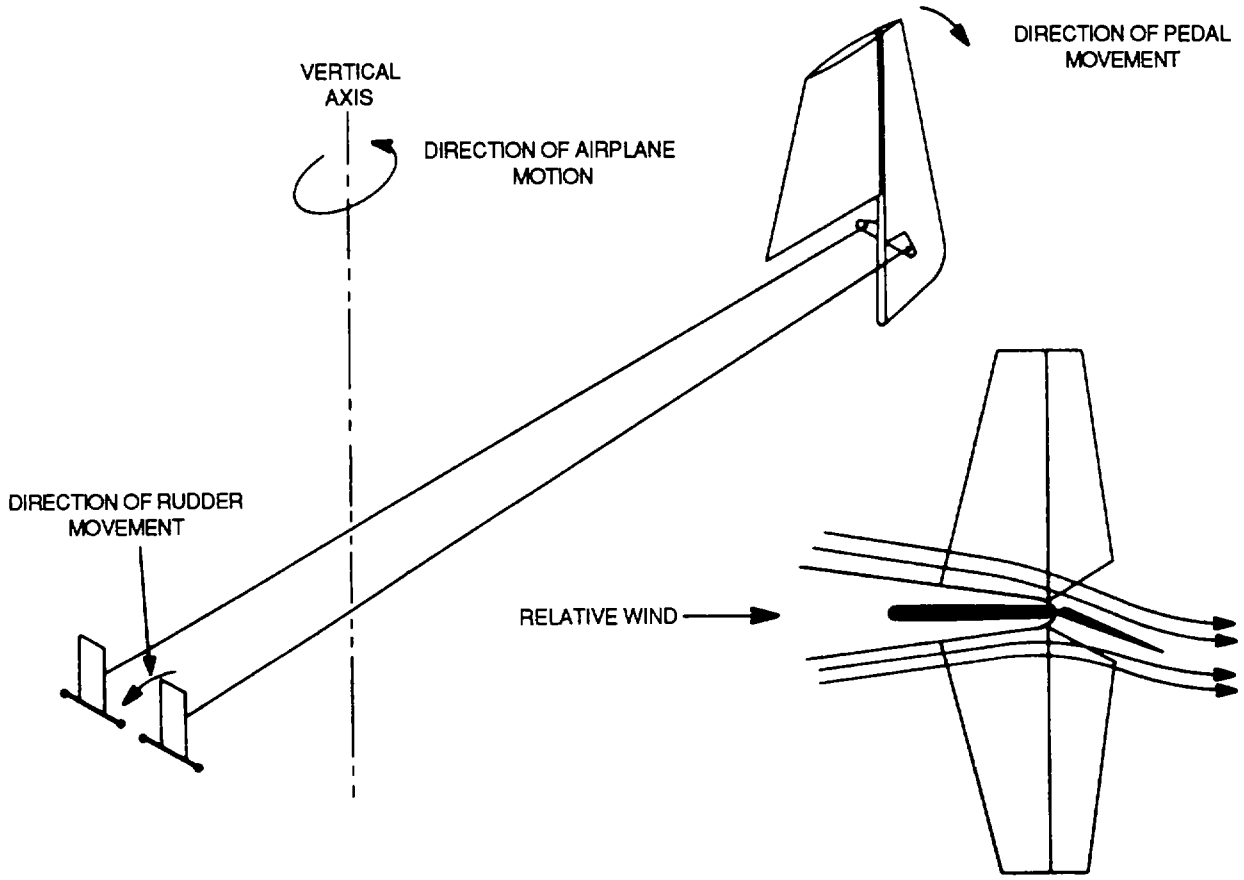

Figure 9-15. Rudder Actlon

(5) Trim tabs. Trim tabs trim the aircraft in flight. To trim means to correct any tendency of the aircraft to move toward an undesirable flight attitude. Trim tabs control the balance of an aircraft so that it maintain straight and level flight without pressure on the control column, control wheel, or rudder pedals. Figure 9-17 shows a trim tab. Note that the tab has a variable linkage which is adjustable from the cockpit. Movement of the tab in one direction causes a deflection of the control surface in the opposite direction. Most of the trim tabs installed on aircraft are mechanically operated from the cockpit through an individual cable system. However, some aircraft have trim tabs that are operated by an electrical actuator. Trim tabs are either controlled from the cockpit or adjusted on the ground before taking off. Trim tabs are installed on elevators, rudders, and ailerons.

b. *Inspection of Flight Controls*. Inspect all flight control surfaces in accordance with the applicable aircraft maintenance manual.

c. *Repair of Flight Controls*. Make all repairs to flight controls in accordance with the applicable aircraft maintenance manual.

d. *Flight Control Operation Systems*. Three types of control systems commonly used are the cable, push-pull, and torque tube systems. The cable system is the most widely used because deflection of the structure to which it is attached do not affect its operation Many aircraft incorporate control systems that are combinations of all three types. The systems which operate the control surfaces, tabs, and flaps include flight control system hardware linkage, and mechanisms. These items connect the control surfaces to the cockpit controls. Included in these systems are cable assemblies, cable guides, linkage, adjustable stops, control surface snubber or locking devices, surface control booster units, actuators operated by electric motors, and actuators operated by hydraulic motors.

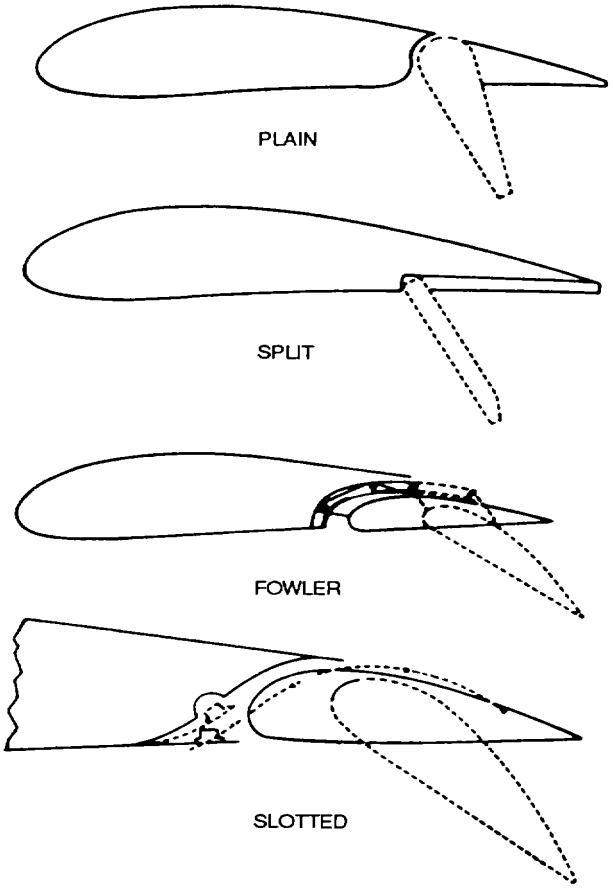

Figure 9-16. Types of Wing Flaps

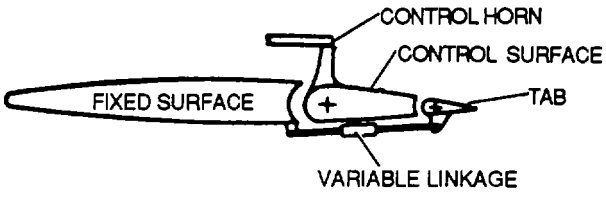

Figure 9-17. Trim Tab Assembly

e. *Control Cables*. Aircraft control cables are generally fabricated from carbon steel or corrosion-resistant steel wire and may consist of either flexible or nonflexible type construction.

(1) *Control cable sizes.* Cable size is measured in diameter as shown in figure 9-18. Control cables vary in diameter, ranging from 1/16 to 3/8 inch. Figure 9-18 also shows common cable designations. Cable designations are based on the number of strands and the number of wires in each strand.

(2) *Control cable inspection and maintenance.* Aircraft cable systems are subject to a variety of environmental conditions and forms of deterioration, such as wear, corrosion, and distortion. The following are general procedures for control cable inspection and maintenance.

(a) Inspect cables for broken wires by passing a cloth along length of cable. Cloth will snag when it passes over broken wire. Figure 9-19 shows cross sections of a 7x7 and a 7x19 cable.

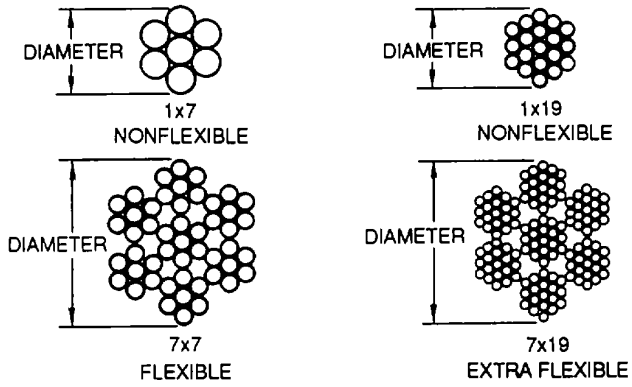

Figure 9-18. Cable Cross Sections

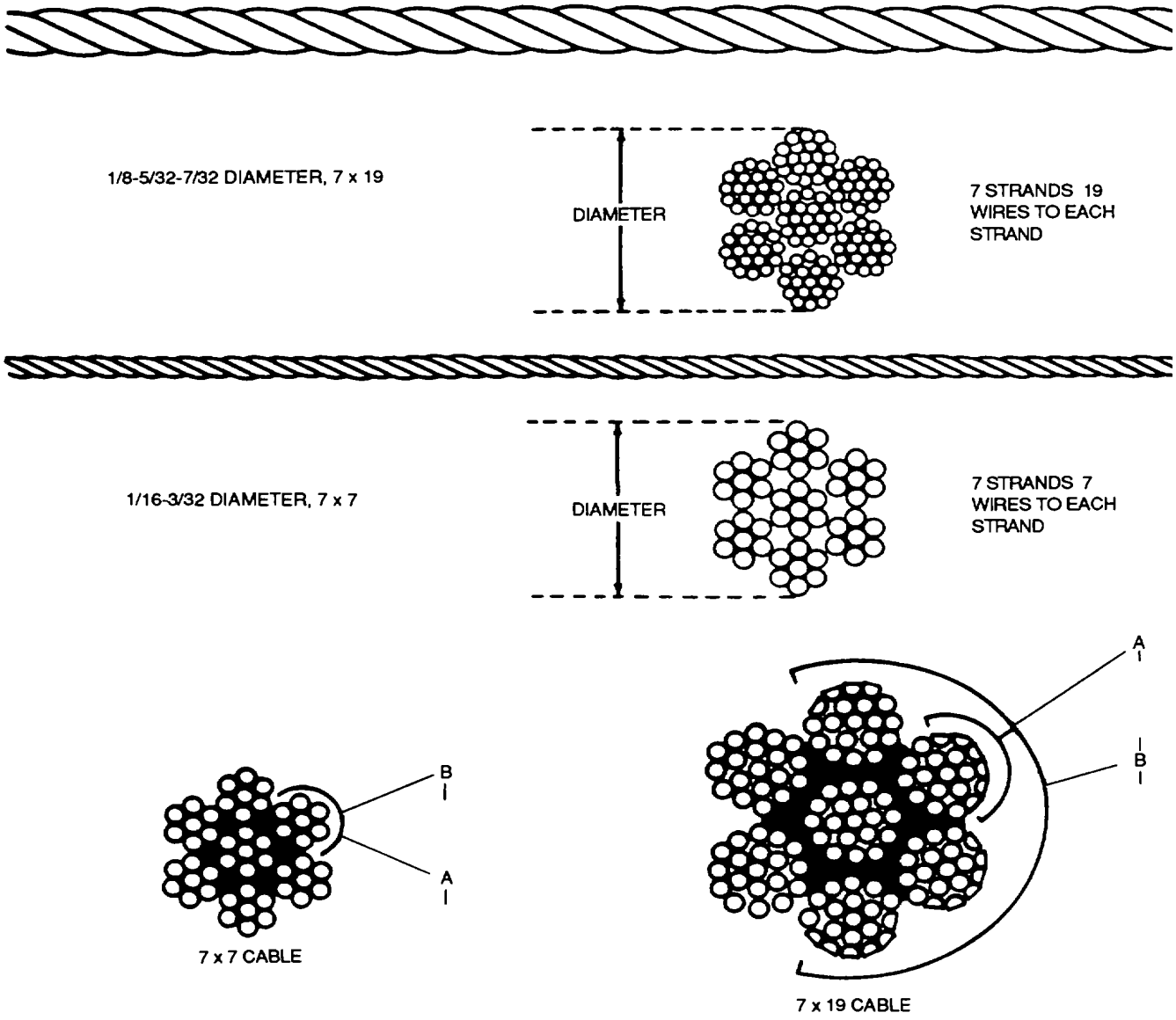

A TYPICAL OUTER WIRE WEAR AREA ON CABLE STRAND HAIRLINE CRACKS BETWEEN WIRES OR FULLY BLENDED SURFACE APPEARANCE OF APPROXIMATELY SIX WIRES FOR 7 x 19 CABLE OR 3 WIRES FOR 7 x 7 CABLE PER OUTER CABLE STRAND INDICATES 50 PERCENT WIRE WEAR IF THIS APPEARANCE IS VISIBLE, THE CABLE SHOULD BE REPLACED

B TYPICAL CABLE WEAR MAY OCCUR ON ONE SIDE ONLY OR ON FULL CIRCUMFERENCE AND MAY EXTEND ALONG THE CABLE FOR A DISTANCE EQUAL TO NORMAL CABLE MOVEMENT

NOTES
1 WHENEVER CABLE WEARS IS FOUND, CAUSE FOR WEAR MUST BE DETERMINED AND CORRECTED
2 ALL DIMENSIONS IN INCHES

Figure 9-19. Control Cable Cross Section and Wear Limits

NOTE

- **Breakage usually occurs in that length of a cable normally passing over a pulley or through a fairlead, as shown in figure 9-20.**
- **Any cable not within specified allowable limits listed in table shall be considered unserviceable and must be replaced.**
- **In addition to limits specified in table 9-1 the maximum allowable number of broken wires shall not occur in any two consecutive inches of cable, that is, if six wires are broken in one inch of a 7 x 19 cable, none would be allowed in the next consecutive inch For any flexible cable, a maximum of three broken wires per inch shall be allowable in the length of cables passing over pulleys, drums, or through fairleads.**

(b) Replace badly worn cables even if number of broken wires is less than specified for replacement.

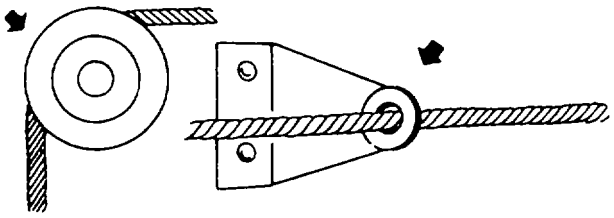

WHERE CABLES PASS OVER PULLEYS OR THROUGH GUIDES OR FAIRLEADS

Figure 9-20. Typical Breakage Point

NOTE

- **Any 7x7 cable having three wires or less per inch worn not more than halfway through the wire diameter, or any 7 x 19 cable having six wires or less per inch worn not more than halfway through wire diameter, shall be considered serviceable if broken wires are present in the worn area.**
- **The cable shall be considered serviceable if broken wires are present but are not in the worn area.**
- **One less worn wire per inch is allowed for each broken wire present in the same inch if more than one worn area is found, but all are within specified limits, the cable is satisfactory, provided no two worn spots are adjacent circumferentially.**
- **Any wire worn completely through, or worn to a point of breaking, shall be considered unserviceable.**
- **Kinked, twisted, or birdcaged cables must be repaired or replaced.**
- **Wear will normally extend along the cable equal to the distance the cable moves at that location Wear may occur on one side of the cable only or on its entire circumference.**
- **Replace cables when the individual wire in each strand appears to blend together (outer wire worn 40 to 50 percent) as depicted in figure 9-19. Actual instances of cable wear beyond recommended point are shown in figure 9-21.**

(c) Move surface controls of the particular cable to the extremities to reveal the cable in the pulley contact, fairlead area, or drum.

Table 9-1. Cable Damage Limits

Cable type	Allowable broken wire
7x7 (flexible)	2 per inch of strand, provided not more than 3 exist in that inch of cable
7x19 (flexible)	3 per inch of strand, provided not more than 6 exist in that inch of cable
1x19 (nonflexible)	None

(d) If the surface of the cable is corroded, relieve cable tension and carefully force the cable open by reverse twisting. Visually inspect the interior.

NOTE

Corrosion on the interior strands of the cable constitutes failure, and the cable must be replaced.

(e) If no internal corrosion is detected, remove loose external rust and corrosion with a clean, dry, coarse-weave rag or fiber brush. After thorough cleaning, apply corrosion preventive, MIL-C-16173 Grade 2, sparingly. Do not apply the material so thick that it will interfere with the operation of cables at fairleads, pulleys, or grooved bellcrank areas.

NOTE

Do not use metallic wools or solvents to clean installed cables. Use of metallic wool will imbed dissimilar metal particles in the cables and create further corrosion problems. Solvents will remove internal cable lubricant allowing cable strands to abrade and further corrode.

(3) Control cable tension adjustment. Rig aircraft as outlined in the applicable aircraft maintenance manual. After rigging, measure for proper tension on control cables, using a tensiometer. Use the following procedures to measure cable tension.

(a) Place cable under the two blocks on instrument, and pull lever on side of instrument down. This pushes up on the center block, called a riser. The force required to raise the center block is indicated by a pointer on the scale.

(b) Convert indicator reading to tension pounds (see figure 9-22).

(c) Adjust cable tension to proper value by either tightening or loosening turnbuckles.

(4) Control cable emergency repair. If possible, duplicate spare cables should be used for replacement. When spare cables are not available and immediate replacement is imperative, use one of the following methods of splicing.

CAUTION

Care must be taken that splice does not foul fairlead or pulley, nor in any other way prevent proper movement of the cable.

(a) Woven spliced terminals. Use woven spliced terminals on cables 3/32 inch diameter or greater in place of swaged terminals. Fabrication components needed are shown in table 9-2. Perform the following procedures to fabricate woven spliced terminals:

1 Sweat solder or wrap cable prior to cutting to prevent fraying.

Table 9-2. Fabrication Components

Nomenclature	Specification
Cable, corrosion-resistant	MIL-W-83420
Wire rope, 1 tinned steel	MIL-W-83420
Cord, serving	V-T-291
Solder, tin-lead	QQ-S-571

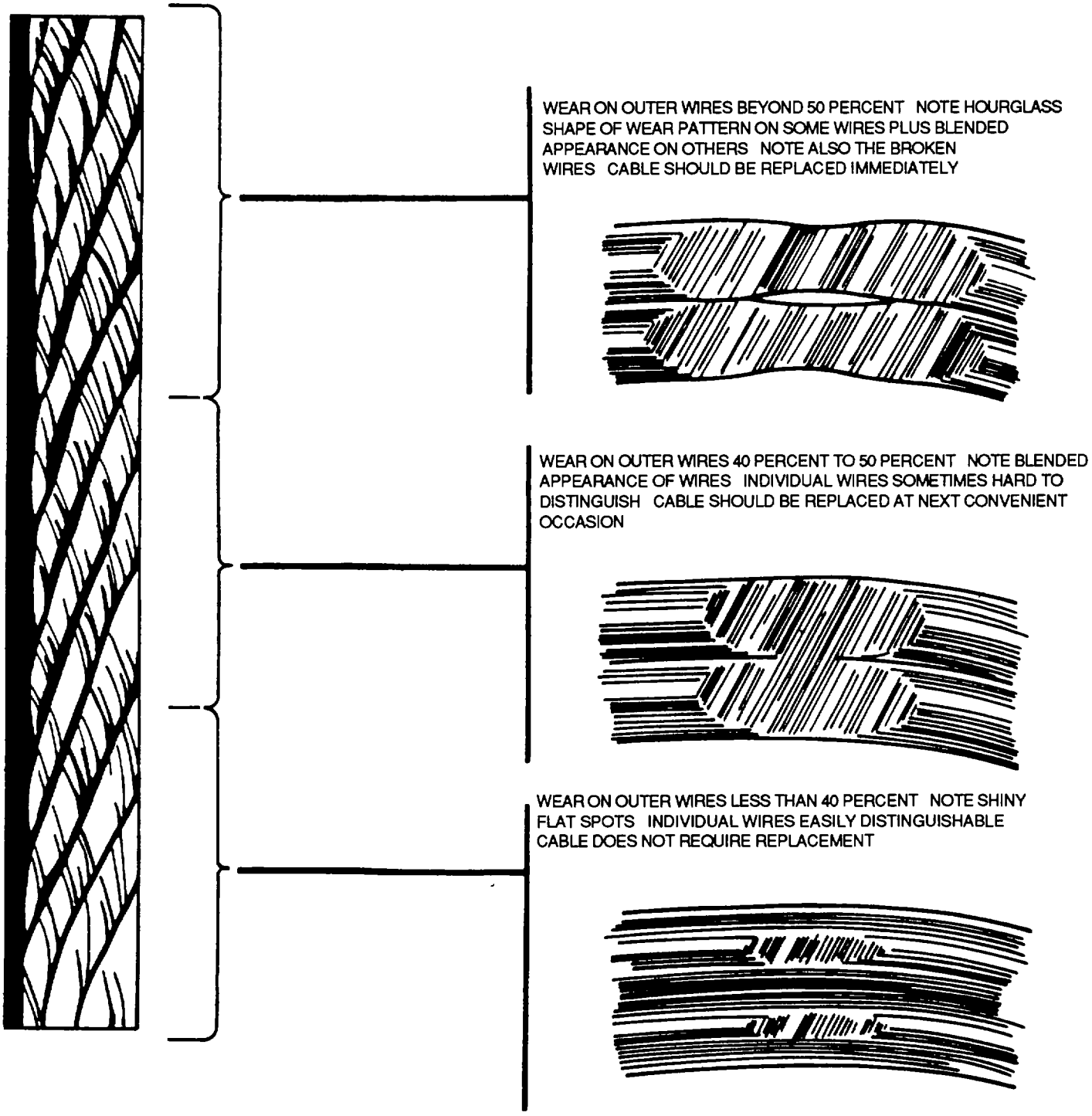

Figure 9-21. Control Cable Wear Limits

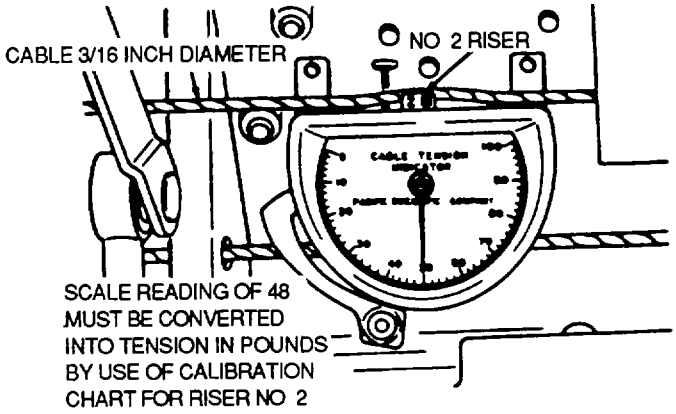

NO 1			RISERS	NO 2		NO 3	
DIA 1/16	3/32	1/8	TENSION LB	5/32	3/16	7/32	1/4
14	17	21	30	18	26		
20	24	28	40	24	32		
25	30	35	50	29	38		
30	35	42	60	34	43		
35	40	48	70	39	48		
39	45	54	80	43	53		
44	50	60	90	47	58		
48	55	65	100	51	62		
52	60	70	110	55	66		
56	64	75	120	59	70		
	68	80	130	63	74		
	72	84	140	66	78		
		89	150	69	82		
		93	160	72	85		
			170	75	89		
			180	78	92		
			190	81	96		
			200	83	99		
TYPED FIGURES ARE INSTRUMENT SCALE READINGS CORRESPONDING TO TENSION			210				
			220				
			230				
CABLE DIAMETERS IN INCHES			240				
			250				

Figure 9-22. Cable Tensiometer

2 Secure cable around a bushing or thimble by means of a splicing clamp leaving 8 inches or more of free end. Secure splicing clamp in a vise with free end to the left of standing wire and away from operator.

3 Select free strand (1, figure 9-23) nearest standing length and separate this strand from rest of separate ends.

4 Insert a marlin-spike under first three stands (A, B, and C) of standing length nearest separated strands of free end and separate them momentarily by twisting marlin-spike.

5 Insert free strand (1) under three separated strands through opening created by marlin spike. Pull free strand taut, using pliers.

6 Unwind a second strand (2), located to left of first strand tucked, and insert this second strand under first two standing strands (A and B).

7 Loosen third free length strand (3) located to left of first two, and insert it under first standing strand (A).

8 Remove center or core strand (7) from free end and insert it under same standing strands (A and B).

9 Temporarily secure core strand to body of standing cable.

10 Loosen strand (6) located to right of first strand (1) and tuck it under last two strands (E and F) of standing cable.

11 Tuck fifth free end (5) around fifth standing strand (E). Tuck fourth free end (4) around sixth standing strand (F).

12 Pull all strands snug toward end fitting with pliers. This completes first tuck.

13 Begin with first free strand (1) and work in a counterclockwise direction, tucking free strands under every other standing strand

14 After completion of every tuck, pull strands taut with pliers. Pull toward end fitting.

15 After completion of third complete tuck, have the number of wires in each free strand. Make another complete tuck with remaining wires.

16 At completion of fourth tuck, again halve number of wires in free strands and make one final tuck with remaining wires.

17 Cut off all protruding strands and pound splice with a wooden or rawhide mallet to relieve strains in wires.

18 Serve spice with waxed line cord. Start 1/4 inch from end of splice and carry wrapping over loose end of cord and along tapered splice to a point between second and third tucks.

19 Insert end of cord back through last five wrappings and pull snug.

20 Cut off end, and when a thimble is used as an end fitting, bend down points.

21 Apply two coats of shellac, Federal Specification TT-S-271, to the cord, allowing 2 hours between coats.

22 Carefully inspect cable strands and spices for local failure. Weakness in a woven splice is made evident by a separation of strands of serving cord.

(b) Wrapped solder splice. The wrapped solder splice may be used on 1/16-inch cable only to fabricate end fittings. The procedure is as follows (see figure 9-24).

1 Arrange cable and fittings as required, allowing approximately 2 1/4 inches of free end.

2 Place assembly in a splicing clamp and secure in a vise.

3 Starting as close as practical to end fittings, press free end standing lengths of cable together tightly, and wrap with a single layer of 0.020 inch brass or copper wire, Federal Specification QQ-W-343, leaving a space of approximately 1/8 inch between every 1/2 inch of wrapping.

NOTE

Care must be exercised to prevent standing length from twisting during this operation.

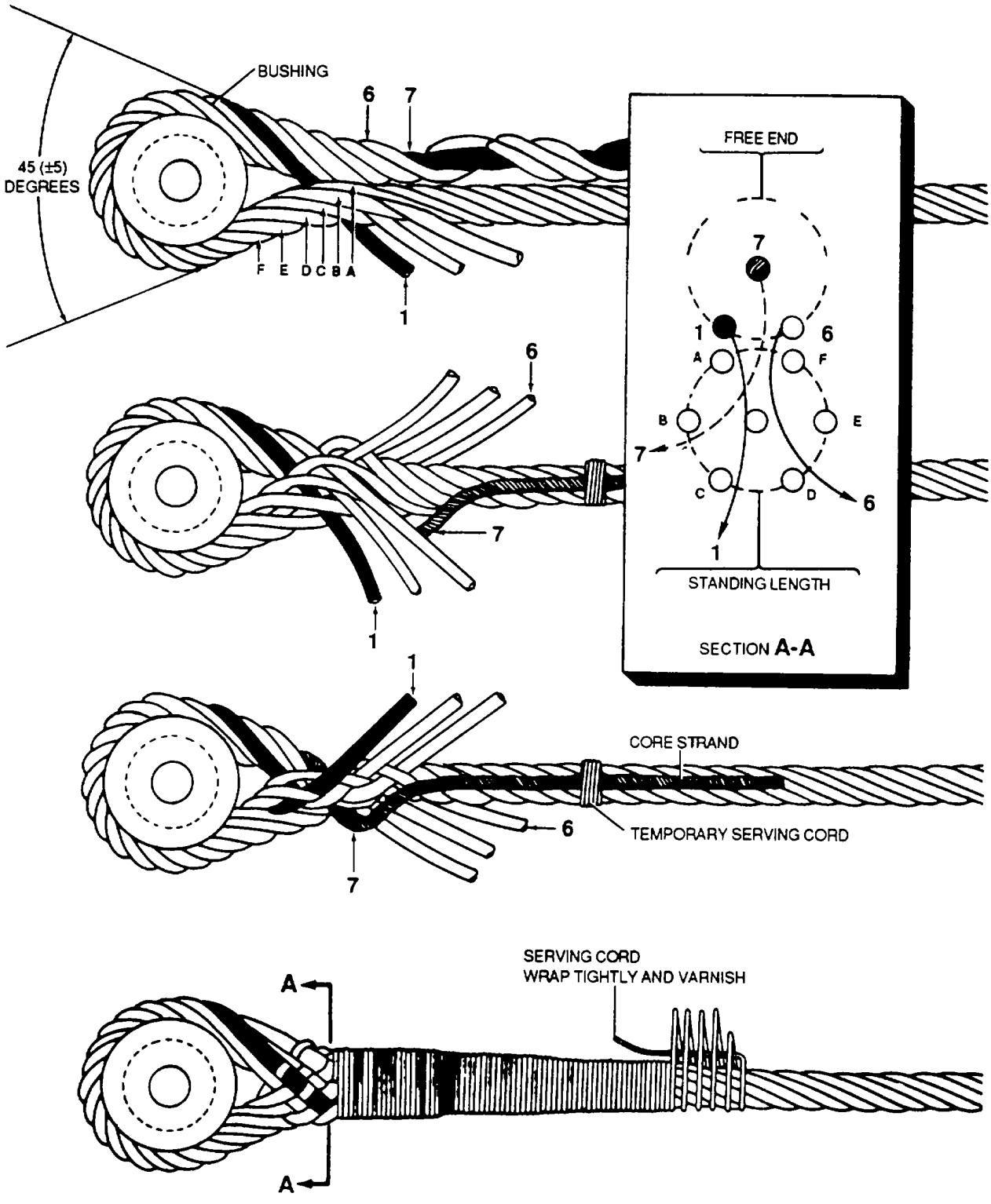

Figure 9-23. Preparation of Woven Cable Splice

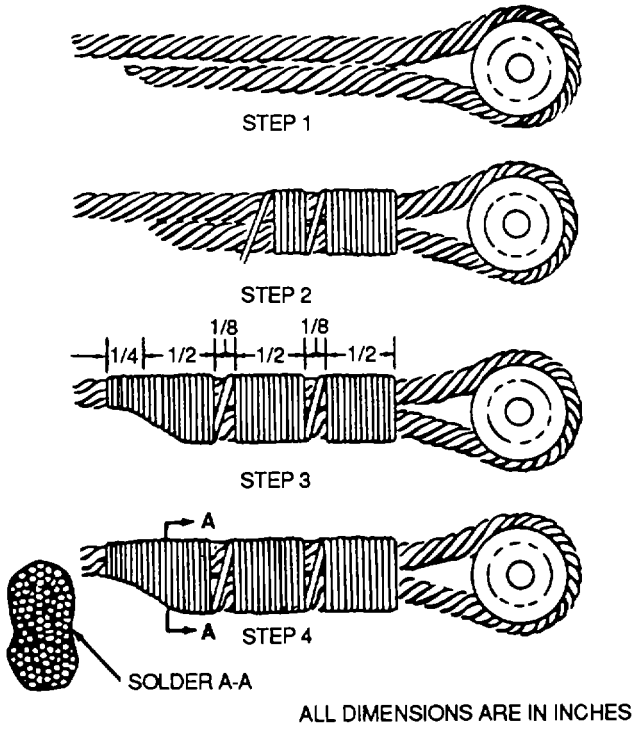

Figure 9-24. Wrapped Solder Splice

4 Allow wrapping to extend approximately 1/4 inch beyond free end.

5 Dip wrapping in tin-lead solder, Federal Specification QQ-S-571.

NOTE

Carefully sweat solder into cable and about wrapping.

6 Apply solder until wrapping wire is barely discernible, and ensure that open spaces between wrap sections are thoroughly impregnated with solder.

7 After splice has cooled, thoroughly wipe clean and remove all solder residue.

8 Wipe cable and impregnate spliced section with corrosion preventive compound, MIL-C-16173, Grade I.

9 Carefully inspect splice. A wrapped soldered splice, easily bent with fingers, is unsatisfactory because of lack of solder penetration.

NOTE

Cracks in solder located between wrapping wire and short space provide between wraps is a positive indication of slippage in wrap soldered splice.

(5) Testing of cables and splices. Test all cables and splices prior to installation using the following procedures:

WARNING

A suitable guard should be placed over cable, during testing, to prevent injury in event of cable failure.

(1) Arrange cable to simulate installation, including pulleys, when required.

(2) Apply test load (refer to Table 9-3) gradually to one end of the cable for 3 minutes.

Table 9-3. Cable Test

Cable size (inches)	Load in pounds1
1/16	288
3/32	552
1/8	1200
5/32	1680
3/16	2520
7/32	3360
1/4	4200
9/32	4800
5/16	5870
3/8	8640

[1]60 percent of minimum allowable breaking strength.

f. *Control System Components*. Control system components are explained in the following paragraphs.

(1) *Turnbuckles.* A turnbuckle assembly is a mechanical screw device consisting of two threaded terminals and a threaded barrel. Figure 9-25 shows a typical turnbuckle assembly. Turnbuckles are fitted in the cable assembly for the purpose of making minor adjustments in cable length and for adjusting cable tension. One of the terminals has right-hand threads and the other has left-hand threads. The barrel has matching right- and left-hand internal threads. The end of the barrel with the left-hand threads can usually be identified by a groove or knurl around that end of the barrel.

(a) *Turnbuckle replacement criteria.* Replace turnbuckles and turnbuckle barrels that are cracked, corroded, or have stripped threads.

(b) *Turnbuckle tolerances.* Turbuckle tolerances are three visible male (cable terminal) threads or four visible female (turnbuckle barrel) threads, each of which should be free of evidence of corrosion at the root of the threads. (The maximum of four visible female (turnbuckle barrel) threads applies only to initial installation of the cable, so that if the cable stretches, the turnbuckle can be adjusted to the desired cable tension, at which time, more or less than four barrel threads may be exposed.) Safety all turnbuckles.

(2) *Cable terminals.* Terminal fittings are generally of the swaged type. They are available in the threaded end, fork end, eye end, single-shank ball end, and double-shank ball end. The threaded end, fork end, and eye end terminals are used to connect the cable to a turnbuckle, bellcrank, or other linkage in the system. The ball-end terminals are used for attaching cables to quadrants and special connections where space is limited. Figure 9-26 shows the various types of terminal fittings. Visually inspect and replace clevis or terminals that are scratched, nicked, dented, corroded, have stripped threads, or are found bent (distorted).

NOTE

Minor nicks, scratches, corrosion pits, less than 0.005 inch deep, may be removed by cleaning and burnishing smooth, to restore the part to useful service.

(3) *Fairleads.* Fairleads, as shown in figure 9-27, are used to guide cables in a straight line through or between structural members of the aircraft. Inspect fairleads for wear, breakage, alignment, cleanness, and security. Examine cable routing at fairleads to assure that deflection angles are no greater than 3 degrees maximum. Determine that all guides and anti-abrasion strips are secure and in good condition. Replace rubber or nylon grommets that show evidence of excessive wear. Replace worn or cracked phenolic fairleads. Reposition fairleads that allow cables to chafe.

(4) *Pulleys.* Pulleys are used to guide cables and change the direction of cable movement. Various cable system malfunctions may be detected by analyzing pulley conditions These include such discrepancies as too much tension, misalignment, pulley bearing problems, and size mismatches between cables and pulleys. Examples of these conditions are shown in figure 9-28 inspect pulleys using the following procedures:

(a) Reposition pulleys that do not align with cables within 2 degrees. Replace inoperative or other- wise defective pulleys.

(b) Inspect pulleys for roughness, sharp edges, and presence of foreign matenal embedded in the grooves.

(c) Inspect pulleys for excessive grooving by visual examination of the surface, and by rotating pulley and observing if the cable twists, rotates, or jumps up and down, as a result of interplay between the grooves of the pulley and the lay of the cable.

(d) Examine pulley bearings to assure proper lubrication, smooth rotation, freedom from flat spots, dirt, and paint spray. Inspect pulley bearings for roughness, binding, noise, rust, lubricant leakage, and excessive looseness compared to a new bearing.

(e) Maintain pulley alignment to prevent the cable from riding on the flanges and chafing against guards, covers, or adjacent structure.

(f) Check all pulley brackets and guards for damage, alignment, and security. Replace if cracked, corroded, or otherwise damaged.

(g) Periodically rotate pulleys, which turn through a small arc, to provide a new bearing surface for the cable.

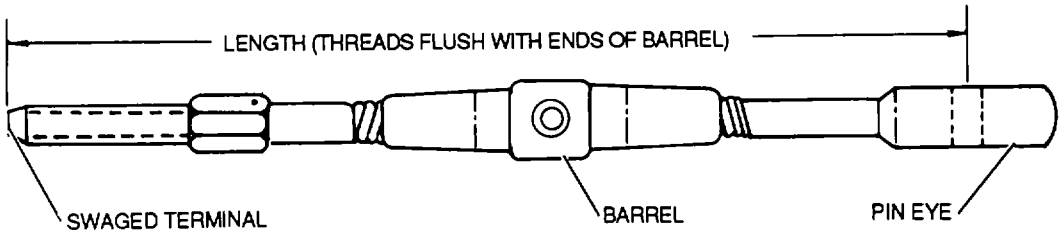

Figure 9-25. Turnbuckle Assembly

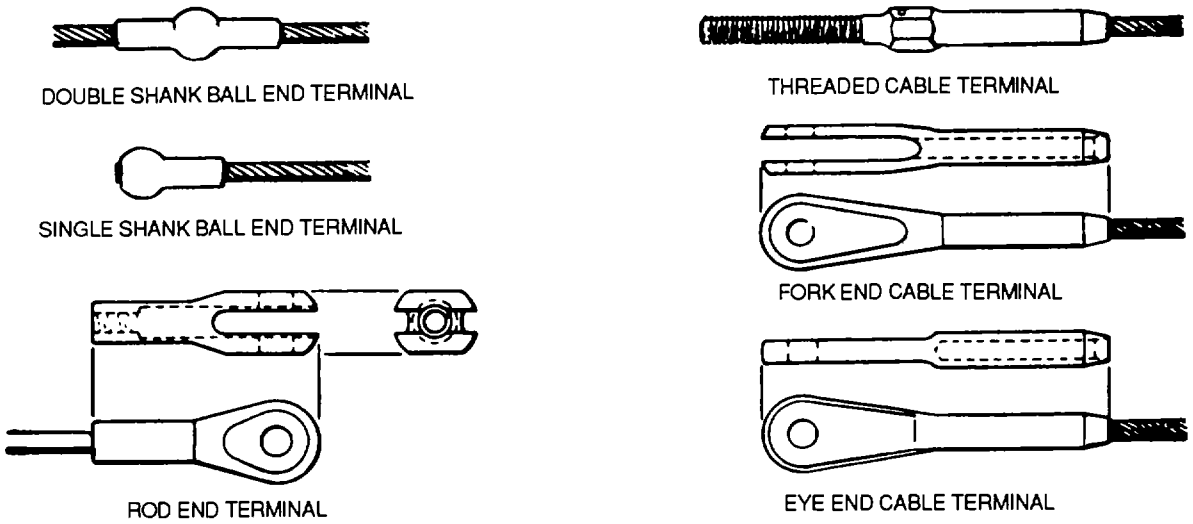

Figure 9-26. Types of Terminal Fittings

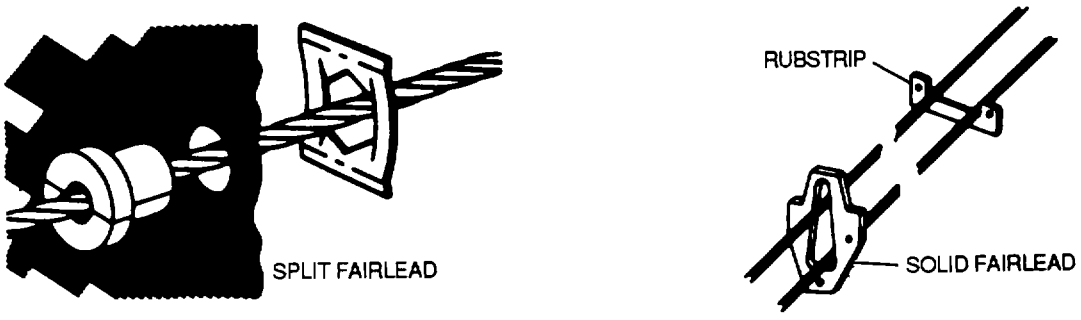

Figure 9-27. Fairleads

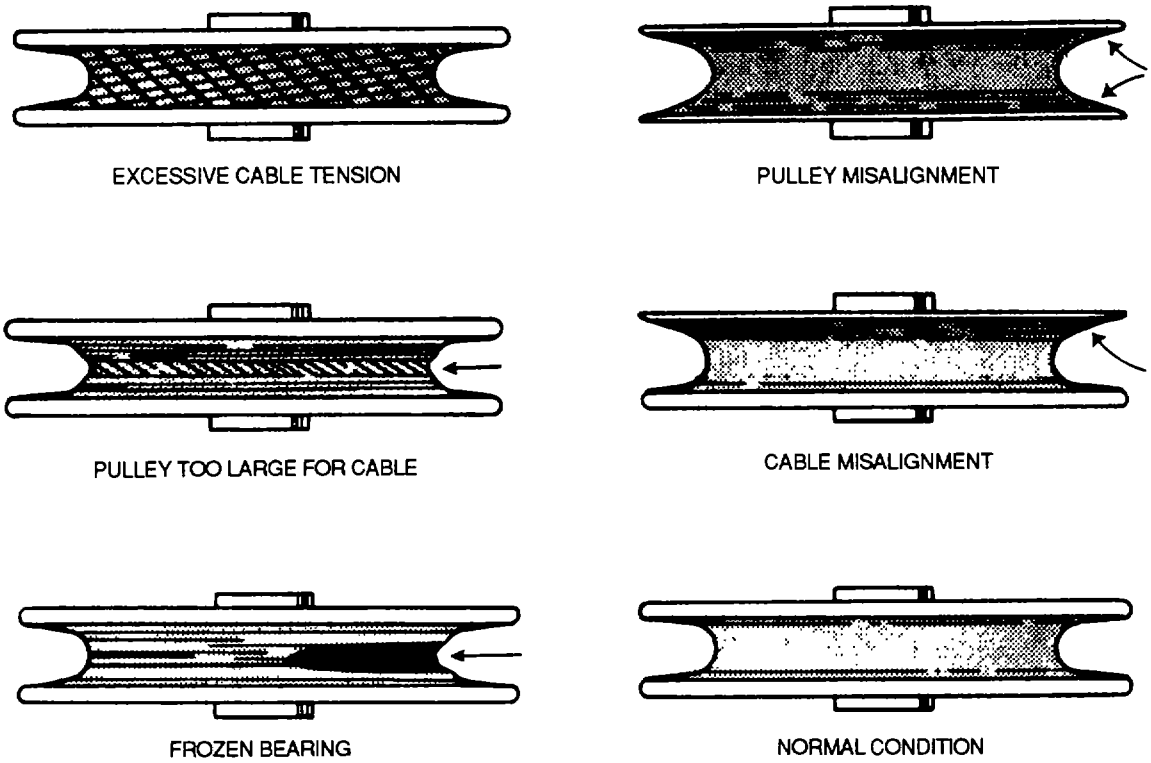

Figure 9-28. Pulley Wear Patterns

NOTE

It is good practice to rotate the pulley 90 degrees while inspecting, so as to relocate the used area to another position and thereby prolong the life of the pulley.

(5) *Control rods.* Control rod assemblies are used as links in mechanical systems to allow remote operation and adjustment of components. Push-pull linkage is designed and constructed so that both torsional and compression forces will be transmitted to the component being operated. Two common types of push-pull linkage are the control tube and the control rod. Control tubes, as shown in figure 9-29, consist of a metal tube, usually made of steel or an aluminum alloy, and two rod ends. One rod end is attached to each end of the metal tube, which may be swaged, expanded, or reamed at the ends to engage the rod ends. The rod ends are welded or riveted to the tube.

NOTE

Operation or adjustment of some accessories or flight controls requires a rotating motion which often is accomplished by means of torque tubes. To effect changes in direction of the torque tube, universal joints are required The most common are MS20270 and MS20271, which are attached to the tube by bolts or rivets.

(a) Inspection of control tubes. The procedure which follows is common to all control tube assemblies Refer to the applicable manual for inspection of each particular component.

1 Check for bent or flattened tube.

2 Check tube for nicks, dents, gouges, scores or scratches, corrosion, and cracks.

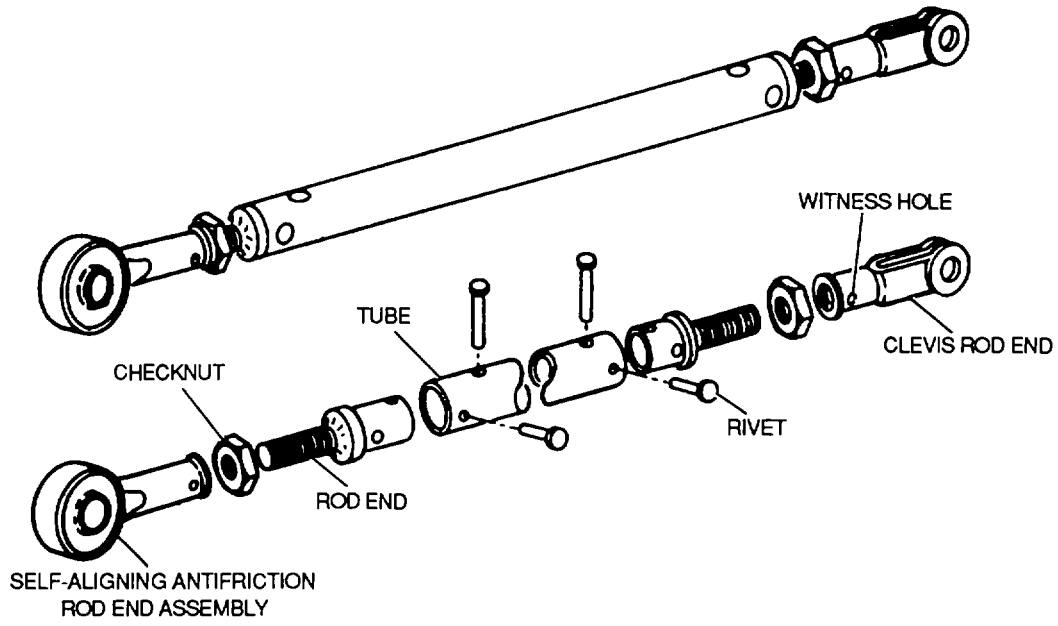

Figure 9-29. Control Tube Assembly

NOTE

If in doubt as to presence of cracks in tube, strip the paint and make a magnetic-particle or fluorescent-penetrant inspection.

3 Check rod ends for security (loose rivets), cracks or breaks, and damaged threaded portions.

(b) Repair of control tubes. Control tubes can be repaired by methods similar to those used on structural members. When repairing a control tube, a perfect straightness must be obtained to preserve the full strength of the tube. Sleeve reinforcements may be added to steel tubes with a scarfed or fishmouth cut and then welded in place. Aluminum alloy tubes can be repaired in the same manner, using rivets for attachment. If possible, the tube should be replaced and the terminals salvaged. AN490 threaded rod ends should be replaced because of difficulty in picking up the original rivet holes.

NOTE

Do not attempt tube repair if center one-third of assembly is damaged. When replacing rod ends that are riveted to control tube, rotate tube 90 degrees and redrill prior to riveting in emergency, repair tubular type control rod by inserting a scarfed or fishmouth sleeve reinforcement.

(c) Installation of control tubes. Install control tube assembly and rod ends as a unit, and make adjustments at time of installation. Consult applicable aircraft manual for proper dimensions and settings. The following are general procedures:

1 Install checknut on tube assembly or threaded end of rod, and attach rod end to assembly.

2 Adjust rod end to obtain correct length of tube assembly Tighten checknut against rod end to prevent its coming loose.

NOTE

Type AN943 internally threaded rod ends are equipped with a witness hole a short distance from the threaded end to ensure adequate thread engagement when installed on an externally threaded rod end. Proper thread engagement is ensured when threads of an externally threaded rod end can be seen and a piece of safety wire cannot be passed through the hole. If you can pass a piece of 0.020 safety wire through the hole, the rod is not screwed in far enough.

3 Install tube assembly with correct bolts, nuts, and washers

NOTE

When connecting a ball beanng rod end, install a plain or countersunk washer, MS20002, of appropriate size under the attaching nut and bolt head to prevent any possibility of rod end slipping off over the bearing retaining nut or bolt head. Attaching nut and bolt must clamp tightly the inner race of bearing to face of washer and supporting structure. Use caution when installing washers so that full movement of rod end is not limited. Nuts and bolts that are only fingertight do not use the beanng for the purpose for which it was intended. Control tubes using clevis rod ends may have washers, if required, installed under bolt and nut heads on outside of fork or between fork and bearing, if space permits. Tighten nuts to torque values shown in applicable aircraft manual.

4 Check for freedom of movement, full travel, and excessive side play.

5 Secure rod ends, bolts, and nuts with applicable safety devices.

(6) Rod ends. Rod ends are used on push-pull linkage as attachment points and to effect minor adjustments. Rod ends are available with threaded, clevis, and bearing ends. Those with internally threaded shanks are used on threaded control rods or control tube assemblies which have threaded rod ends Other rod ends are used to make up control tube assemblies Rod ends are used to make adjustments in control tube length and usually are safetied with a checknut or lockwire

(a) *Inspection of rod ends.* Clean and inspect rod ends using the following procedures:

1 Check for cracks and breaks.

2 Check for threaded portion for damaged threads

3 Check for evidence of corrosion.

4 Check for bent or misaligned clevis forks and elongated bolt holes

5 Thoroughly clean, inspect, and lubricate bearings in accordance with TM 55-1500-322-25.

(b) *Repair of rod ends.* Minor repairs maybe accomplished using the following procedures:

1 Smooth out small nicks and scratches with fine abrasive cloth, Federal Specification P-C-451.

2 Correct minor thread irregularities by chasing threads with a tap or die.

3 Replace defective bearings.

4 Major defects will require replacement of rod end.

(c) Installation of rod ends. Install rod ends and control tube assembly as a unit. Refer to paragraph 9-12f (5)(c).

(7) Bellcranks. Bellcranks, as shown in figure 9-30, change direction of motion and transmit motion to parts such as control rods, cables, and torque tubes Replace all worn, bent, or otherwise defective bellcranks.

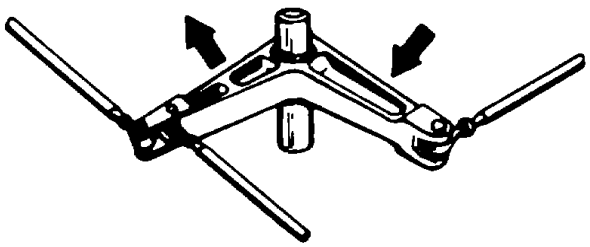

Figure 9-30. Bellcrank

(8) Mixing units. Mixing units combine four motions from the cockpit (pitch, roll, yaw, and thrust) and convert them into two outputs. Inspect and maintain in accordance with the applicable maintenance manual.

(9) Drive chains. Replace defective links in chains and maintain in accordance with applicable maintenance manual.

(10) Speed rigs. Speed rigs are tied in the cable assembly for the purpose of making rapid minor adjustments.

9-13. ENVIRONMENTAL CONTROL SYSTEMS. Environmental control systems heat, cool, and remove moisture from the air supplied to the crew or passenger compartments.

a. Types. The forced air heating system, combustion heater, and pressurized system are used by Army aircraft. Each is explained in the following paragraphs.

(1) Forced air heating system. Heated air is provided for crew comfort, deicing, defrosting, and anti-icing. Air is forced into muffs or jackets installed around the tailpipes. The air routed through the muff or jacket picks up heat by convection through the tailpipe material. The heated air is then routed to an air-to-air heat exchanger before going on to perform various heating functions. Maintenance to this type of system is limited, and will consist of the following:

WARNING

Degreasing Solvent, MIL-PRF-680, is combustible and toxic to eyes, skin, and respiratory tract. Wear protective gloves and goggles/face shield. Avoid repeated or prolonged contact. Use only in well ventilated areas (or use approved respirator as determined by local safety/industrial hygiene personnel). Keep away from open .ames or other sources of ignition.

(a) Wash all metal parts of heating system in degreasing solvent, MIL-PRF-680. Wash .exible tubing with mild soap, Federal Speci.cation P-S-620, and water.

(b) Lubricate valve cranks and push-pull levers with a small amount of molybdenum-disul.de technical powder, MIL-M-7866.

(c) Pressure-test any repair made to heat exchanger tube before installation. A repaired tube is considered a temporary measure and will be replaced when parts become available.

NOTE

Heaters with an engine exhaust heat source require an operational test for carbon monoxide levels upon installation of the heater or following extensive heat exchanger maintenance, modification, or suspected malfunction.

The test will be performed at heat duct opening with the heater full on and the engines operating at full military power. An indication of 50 parts per million (ppm/0.005 percent) or greater requires corrective action prior to heater use. Suggested test equipment is: Detector Kit, Carbon Monoxide, Colorimetric, NSN 6665-00-618-1482 and Indicator Tubes, Carbon Monoxide, NSN 6665-00-276-7545.

(2) Combustion heater. The combustion heater provides heat by routing outside air past a burner section. The outside air picks up heat by convection from the burner section and is then routed to perform various heating functions. Maintenance of heater between overhauls will normally consist of inspection, cleaning, or replacement of parts as explained in the following procedures:

WARNING

DELETED

CAUTION

Do not use a metal instrument, as it may damage core passage.

(a) Clean core tip and body of spray nozzle with degreasing solvent, MIL-PRF-680. Use a wooden stick to scrape off any dirt remaining on spray nozzle.

WARNING

Degreasing Solvent, MIL-PRF-680, is combustible and toxic to eyes, skin, and respiratory tract. Wear protective gloves and goggles/face shield. Avoid repeated or prolonged contact. Use only in well ventilated areas (or use approved respirator as determined by local safety/industrial hygiene personnel). Keep away from open flames or other sources of ignition.

Aliphatic Naphtha, TT-N-95, is extremely flammable and toxic to eyes, skin, and respiratory tract. Wear protective gloves and goggles/face shield. Avoid repeated or prolonged contact. Use only in well ventilated areas (or use approved respirator as determined by local safety/industrial hygiene personnel). Keep away from open flames, sparks, or other sources of ignition.

CAUTION

Do not use chlorinated solvents in order to avoid possible damage to filter element.

(b) Clean filter element by passing air or degreasing solvent, MIL-PRF-680, through it in reverse direction after removal from filter bowl. When these methods fail to clean element, it should be replaced.

(c) Use dry, filtered air to blow out any dust that may have accumulated in ignition unit. Wipe out any oil with a dry, clean cloth .

(d) Secure all heater drain plugs with lockwire to prevent loss of plugs and resultant flame discharge. Prepare drain plugs for safetying as follows:

1 Drill hex head bolts across a corner with a No. 52 drill.

2 Drill countersunk hex head plugs completely through and countersink drilled head 90 degrees by 3/32-inch diameter on both sides of plug.

3 Secure drain plugs to any suitable adjacent point using steel wire, ASTM A580 ANO A313.

NOTE

Combustion heaters require an operation test for carbon monoxide levels upon installation of the heater or following extensive heat exchanger maintenance, modification, or suspected malfunction.

The test will be performed at a heat duct opening with the heater full on. An indication of 50 parts per million (ppm/0.005 percent) or greater requires corrective action prior to heater use. Suggested test equipment is: Detector Kit, Carbon Monoxide, Colorimetric, NSN 6665-00-618-1482 and Indicator Tubes, Carbon Monoxide, NSN 6665-00-276-7545.

(3) Pressurized system. A pressurized system maintains the cabin pressure altitude at a constant value. Pressurized air is pumped into the sealed fuselage from cabin superchargers. The superchargers deliver a constant volume of air at all altitudes up to a designed maximum. Air is released from the fuselage by a device called an outflow valve. The outflow valve, by regulating the air exit, controls the pressure within the aircraft. Maintain in accordance with the applicable maintenance manual.

b. Repair of Flexible Air Ducts. Cracked flexible air ducts, constructed of fiberglass material, will be inspected and repaired on the aircraft when economically feasible. Silicone damage shall not exceed 3.0 inches in length and 1.5 inches wide with limits of two repairs per foot of duct or three percent of total surface area. Reworked areas will be sanded or buffed to fair in with adjoining material. Repair flexible air ducts using the following procedures:

(1) Clean damaged area with Aliphatic Naptha, TT-N-95. Allow cleaned area to air-dry a minimum of 30 minutes.

(2) Apply to a brush coat of Room Temperature Vulcanizing (RTV), MIL-A-46146, on damaged area with a 0.5 inch overlap from edge of damaged area.

(3) Smooth and cure by air drying a minimum of two hours at room temperature or until it is dry to the touch.

NOTE

For repair of damage to the fiberglass cloth, the limitation is no more than 10 percent of surface area after completion of repair.

(4) Clean the complete circumference of the air duct in the vicinity of damaged area with Aliphatic Naptha. Allow cleaned area to air-dry a minimum of 30 minutes.

(5) Use brush to apply a thin coat of adhesive to the complete circumference of the duct in the damaged area and smooth out adhesive.

NOTE

Repairs of flexible ducts made of fiberglass impregnated with chloroprene shall be made with adhesive , NSN 8040-00-390-7960 (P/N Bostick 4006A and 4006B) utilizing fiberglass cloth. Repairs will be accomplished in a well-ventilated area.

9-14. Deicing Systems. Pneumatic deicing systems use rubber deicers, called boots or shoes, attached to the leading edge of the wing and stabilizers. The deicers are composed of a series of inflatable tubes. During operation, the tubes are inflated with pressurized air, and deflated in an alternating cycle as shown in figure 9-31. This inflation and deflation causes the ice to crack and break off. The ice is then carried away by the airstream.

a. Deicing System Precautions. Exercise the following precautions to assure maximum service life of deicer shoes:

- Repair all damage promptly.
- Keep deicer shoes free of oil, gasoline, paint remover, solvents, and other injurious substances.
- Clean deicer shoes, using a mild soap, A-A-50, and water solution not exceeding 180°F (82°C).
- Do not rest ladders of work stands against leading edges having deicer shoes installed. Wrap padding around those portions of work stands which could come in contact with installed deicer shoes.
- Do not drag fuel or oil servicing hoses over the deicer shoes.
- Do not walk or lay tools and objects on upper stretch area of shoes. Deicer shoes, when installed, are under tension and therefore readily susceptible to abrasion.
- Protect deicer shoes from abuse.

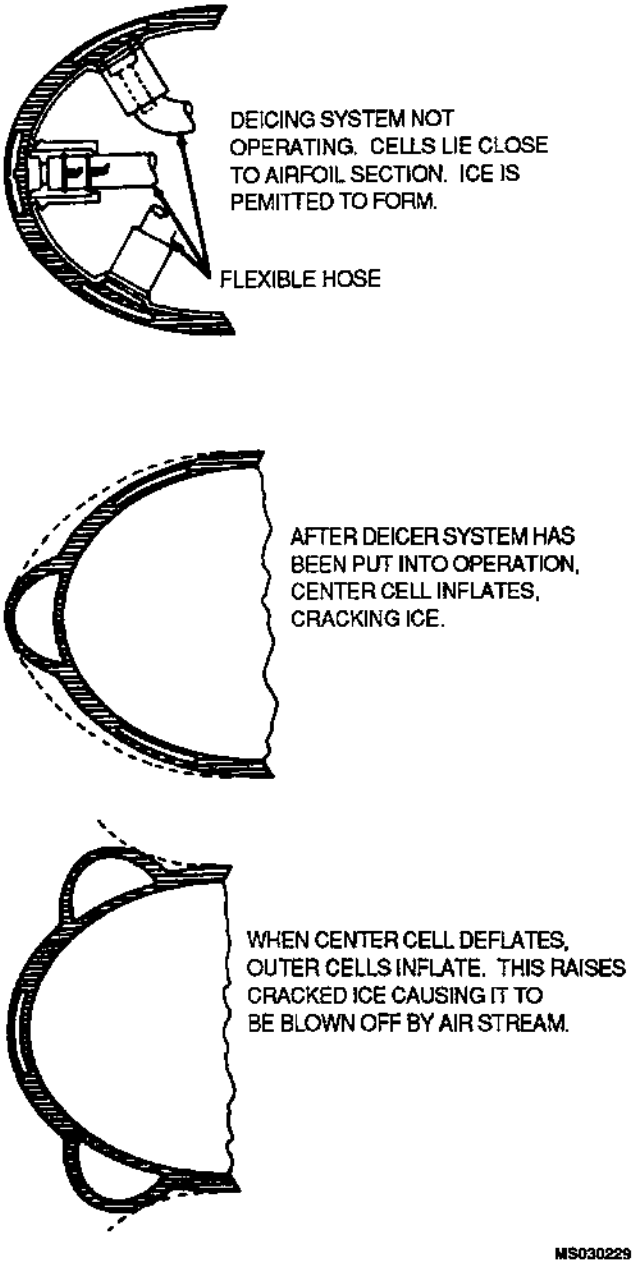

Figure 9-31. Deicer Boot Inflation Cycle

b. Deicing System Preventive Maintenance. Preventive maintenance for deicing systems will entail the following procedures:

CAUTION

DELETED

WARNING

Aliphatic Naphtha, TT-N-95, is extremely flammable and toxic to eyes, skin, and respiratory tract. Wear protective gloves and goggles/face shield. Avoid repeated or prolonged contact. Use only in well ventilated areas (or use approved respirator as determined by local safety/industrial hygiene personnel). Keep away from open flames, sparks, or other sources of ignition.

(1) Thoroughly clean affected Aliphatic Naphtha, TT-N-95.

WARNING

Avoid breathing vapors from cements and solvents utilized during this operation.

(2) Apply a brush coating of sealing area usingcompound, PR-1826 B1/2, approximately 1/32 inch thick over clean area.

(3) Allow sealing compound to dry until no longer tacky.

(4) Rub down sealing compound to remove brush marks and feather edges using abrasive paper, 400 grit, Federal Specification P-P-101, or equivalent.

(5) Remove powdered sealing compound with compressed air or a dry, clean cloth.

(6) Apply one coat of approved conductive cement to entire surface of shoe.

c. Deicing System Troubleshooting. A typical troubleshooting chart for deicing systems is shown in table 9-4.

d. Deicing System Maintenance. Maintenance of deicer system consists primarily of the care and repair of deicing shoes and the replacement of defective component parts. The following paragraphs explain general maintenance for deicing systems.

(1) Patch installation. Install patches using the following procedures:

(a) Thoroughly clean affected area, using Aliphatic Naphtha, TT-N-95.

(b) Buff affected area until completely roughened.

(c) Clean buffed area with a clean cloth completely dampened with Aliphatic Naphtha.

(d) Select a patch of ample size to cover damage.

(e) Apply one coat of Goodrich 60 cement, or equivalent, to damaged area and patch, and allow to dry thoroughly (5 to 10 minutes).

(f) Reactivate both cemented surfaces with a cloth dampened with Aliphatic Naphtha, and apply patch to deicer shoe, starting at edge and working down carefully to avoid trapping air beneath patch.

(g) Allow patch to set 15 minutes, then wipe patch and surrounding area with Aliphatic Naphtha.

(h) Buff and clean a minimum area of ½ inch around patch.

(i) Apply a brush coat of sealing compound, PR-1826 B1/2.

NOTE

Weather-checked surfaces and abraded areas not requiring a patch will be treated as outlined in paragraph 9-14b.

Repair cuts, tears, and severe scuff damage to tube or stretch area with reinforced (one-way stretch) neoprene patches. Damage to non-stretch areas will be repaired with plain neoprene patches.

(2) Cold patch limits. Limits for cold patching are as follows:

(a) Cuts up to one inch on deicer shoes attached with fairing strips.

(b) Cuts up to three inches in length on deicer shoes attached with cement.

9-15. Fire Detection and Extinguishing Systems. Fire detection and extinguishing systems are explained in the following paragraphs.

a. Fire Detection Systems. The fire detection systems are designed to detect the presence of fire in zones such as engine compartment and combustion-type heater compartment, and to light a red warning light in the pilot's compartment in event of fire. To detect fires or overheat conditions, detectors are placed in the various zones to be monitored. Fires are detected in aircraft using one or more of the following:

Table 9-4. Troubleshooting Pneumatic Deicing Systems

Trouble	Probable cause	Remedy
1. Pressure gauge oscillates	a. Faulty lines or connections.	Repair or replace lines. Tighten loose connections.
	b. Deicing boots torn or punctured	Repair faulty boots.
	c. Faulty gauge	Replace gauge.
	d. Faulty air relief valve	Adjust or replace relief valve.
	e. Faulty air regulator	Adjust or replace regulator.
2. Pressure gauge oscillates; peaks at a specified pressure while instrument vacuum gauge shows no reading	a. Vacuum check valves installed improperly	Reinstall correctly.
	b. Vacuum relief valve Improperly adjusted or faulty	Adjust or replace valve as necessary.
	c Faulty lines between pump and gauge	Tighten, repair, or replace faulty lines or connections.
3. Pressure gauge shows no pressure while vacuum gauge shown normal reading.	a. Faulty pressure gauge line	Repair or replace line.
	b. Faulty pressure gauge	Replace gauge.
	c. Pressure relief valve faulty	Adjust or replace as necessary.
	d. Pressure regulator faulty	Adjust or replace as necessary.
4 Cycling period irregular	a. Loose or faulty tubing and connection	Tighten, repair, or replace as necessary.
	b. Boots torn on punctured	Repair faulty boots.
	c. Faulty electronic timer	Replace timer.

- Rate-of-temperature rise detectors
- Radiation sensing detectors
- Smoke detectors
- Overheat detectors
- Carbon monoxide detectors
- Combustible mixture detectors
- Fiber-optic detectors
- Flame detectors
- Observation by crewmembers

b. *Types of Fire Detection Systems.* A fire detection system should signal the presence of a fire. Units of the system are installed in locations where there are greater possibilities of a fire Three detector systems in common use are the thermal switch system, thermocouple system, and the continuous-loop detector system.

(1) *Thermal switch system*. The thermal switch system uses a bimetallic thermostat switch or spot detector similar to that shown in figure 9-32. Each detector unit consists of a bimetallic thermoswitch. These thermal switches are heat-sensitive units that complete electrical circuits at a certain temperature. If the temperature rises above a set value in any one section of the circuit, the thermal switch will close, completing the light circuit to indicate the presence of a fire or overheat condition.

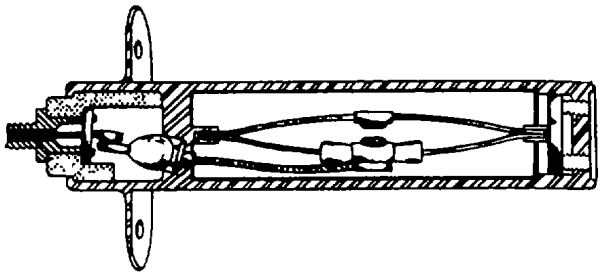

Figure 9-32. Thermal Switch

(2) *Thermocouple system.* The thermocouple is constructed of two dissimilar metals such as chrome and constantan. The point where these metals are joined and will be exposed to the heat of a fire is called a hot junction. There is also a reference junction enclosed in a dead air space between two insulation blocks. A metal cage surrounds the thermocouple to give mechanical protection without hindering the free movement of air to the hot junction. If there is a fire, the hot junction will heat more rapidly than the reference junction. This will complete a circuit from the aircraft power system to the coil of the slave relay which closes and completes the circuit to the fire-warning light.

(3) *Continuous-loop system.* A continuous loop detector or sensing system permits more complete coverage of a fire hazard area than any type of spot-type temperature detectors. Continuous-loop systems are versions of the thermal switch system. They are overheat systems, heat-sensitive units that complete electrical circuits at a certain temperature. There is no rate-of-heat-rise sensitivity in a continuous-loop system. Two widely used types of continuous-loop system are the Kidde and the Fenwal systems.

(a) *Kidde system*. The Kidde continuous-loop system, as shown in figure 9-33, has two wires Imbedded In a special ceramic core within an Inconel tube. One of the two wires In the Kidde sensing system is welded to the case at each end and acts as an internal ground The second wire is a hot lead (above ground potential) that provides a current signal when the ceramic core material changes its resistance with a change in temperature.

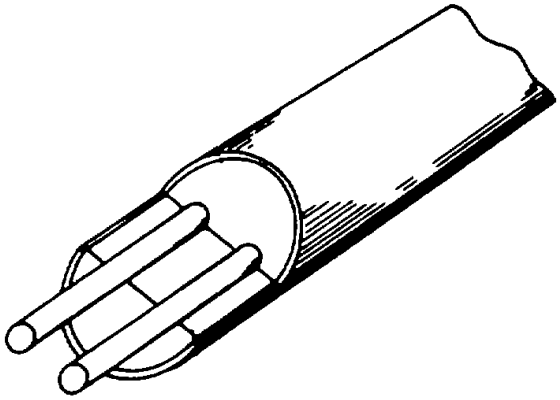

Figure 9-33. Kidde Sensing Element

(b) Fenwal system. The Fenwal system, as shown in figure 9-34, uses a single wire surrounded by a continuous string of ceramic beads in an Inconel tube. The beads in the Fenwal detector are wetted with a eutectic salt which possesses the characteristic of suddenly lowering its electrical resistance as the sensing element reaches its alarm temperature.

c. Maintenance of Fire Detection Systems. Inspect fire detection systems for the following:

- Cracked or broken sections caused by crushing or squeezing between inspection plates, cow panels, or engine components.
- Abrasion caused by rubbing of element on cowling, accessories, or structural members
- Pieces of safety wire or other metal particles which may short the spot detector terminals.
- Condition of rubber grommets in mounting clamps, which may be softened from exposure to oils, or hardened from excessive heat.
- Dents and kinks In sensing element sections

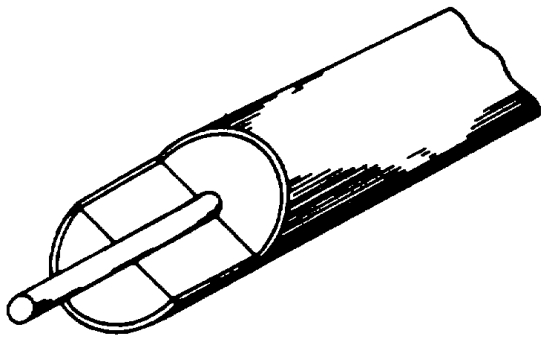

Figure 9-34. Fenwal Sensing Element

NOTE

Limits on the element diameter, acceptable dents or kinks, and degree of smoothness of tubing contour are specified by manufacturers. No attempt should be made to straighten any acceptable dent or kink, since stresses may be set up that could cause tubing failure.

- Loose nuts or broken safety wire at the end of the sensing elements.

NOTE

Loose nuts should be re-torqued to the value specified in the manufacturer's instructions. Some types of sensing element connections require the use of copper crush gaskets. These gaskets should be replaced any time a connection is separated.

- Broken or frayed flexible leads, if used.

NOTE

The flexible leads is made up of many fine metal strands woven into a protective covering surrounding the inner insulated wire. Continuous bending of the cable or rough treatment can break these fine wires, especially those near the connectors Broken strands can also protrude into the insulated gasket and short the center electrode.

- Proper sensing element routing and clamping.

NOTE

Long unsupported sections may permit excessive vibration which can cause breakage. The distance between clamps on straight runs is usually about 8 to 10 inches, and is specified by each manufacturer. At end connectors, the first support clamp is usually located about 4 to 6 inches from the end connector fittings. In most cases, a straight run of 1 inches is maintained from all connectors before a bend is started, and an optimum bend radius of 3 inches is normally adhered to.

- Rubbing between a cowl brace and a sensing element.
- Correct grommet installation.
- Thermocouple detector mounting brackets should be repaired or replaced when cracked, corroded, or damaged.

d. Troubleshooting of Fire Detection Systems. A typical troubleshooting chart for fire detection systems is shown in table 9-5.

e. Repair or Replacement of Fire Detection Components. Repair or replace fire detection components using the following procedures:

(1) Replace defective control unit with a serviceable unit.

CAUTION

Do not bend sharply, kink, or twist sensing element during installation Minimum allowance curve radius is one inch. Damage may otherwise result.

Table 9-5. Troubleshooting of Fire Detection Systems

Trouble	Probable cause	Remedy
1. Intermittent alarms	a. Short In the detector system wiring.	Repair or replace defective wiring.
	b. Kinks and bends in sensing element.	Repair damaged areas of sensing element.
2. False alarms	a. Short between loop connections and control units.	Repair or replace defective wiring.
	b. Bent areas of sensing loop in contact with hot parts of the engine.	Repair bent areas of sensing loop.
	c. Short In the sensing loop.	Replace shorted section of sensing loop.
	d. Moisture in detection system.	Remove moisture contamination.
3. Failure to obtain an alarm signal when the test switch Is actuated	a. Defective test switch or control unit.	Replace test switch or control unit.
	b. Lack of electrical power.	Provide electrical power.
	c. Inoperative Indicator light.	Replace indicator light.
	d. An opening in sensing element or connecting wiring.	Repair sensing element or connecting wiring.

(2) Replace sensing element only when physical damage such as cha.ng, bending, twisting, or breaking has occurred. Replace attaching parts when found to be defective.

CAUTION

Bends will not be less than two inches in radius.

(3) Replace cable detector only when physical damage such as cha.ng, bending, twisting, or breaking has occurred. Make all bends and routing with .ngers only. Replace attaching parts when found to be defective.

(4) Replace mounting brackets of thermocouple detectors when cracked, corroded, or damaged. Replace attaching parts when found to be defective.

NOTE

When replacing thermocouple detector, note which wire is connected to identi.ed plug terminal of defective unit, and connect replacement in the same way.

f. Testing of Fire Detection System. Test .re detection system using the following procedures:

(1) Test system for proper operation by turning on power supply and placing FIRE DET TEST switch in test position. Red warning light should flash on within 10 seconds. Turn switch and power off.

(2) Test required after repair or replacement of units in fire detector system or when system is inoperative as follows:

- Replace lamp in warning light, when warning light does not flash on.
- Polarity, ground, resistance, and continuity tests are required for systems with thermocouple detect or units.
- Resistance and continuity tests are required for systems with sensing elements or cable detector units.

WARNING

Repeated or prolonged exposure to high concentrations of bromochloromethane (CB) or decomposition products should be avoided. CB is a narcotic agent of moderate intensity but of prolonged duration. It is considered less toxic than carbon tetrachloride, methylbromide, or usual products of combustion. Normal precautions should be taken while using bromochloromethane including use of oxygen masks when available. Injury to personnel may otherwise result.

Monobromotrifluoromethane (CF_3Br) is highly volatile but is not easily detected by its odor. Although nontoxic, it must be considered to be about the same as other freons and carbon dioxide, causing danger to personnel primarily by reduction of oxygen available for proper breathing. The liquid should not be allowed to come into contact with skin, as it may cause frostbite or low temperature burns.

g. Fire Extinguishing Systems. The fire extinguisher system is the one-shot type consisting of one or more charged containers of bromochloromethane or monobromotrifluoromethane (CB and CF_3Br), discharging tubing, overboard discharge tube, discharge indicator, circuit breakers, and control panel switch. The container is charged with monobromotrifluoromethane under pressure, which is discharged through tubing into the engine compartments by actuating FIRE EXT switch to the ON position.

h. Maintenance of Fire Extinguishing Systems. Maintenance of fire extinguisher system consists of inspection and replacement of defective parts using the following procedures:

(1) Check for specific pressure on pressure gauge as given in applicable aircraft maintenance manual.

(2) Inspect overboard discharge indicator for evidence of system being discharged due to thermal expansion.

CAUTION

Do not flush system with water. Damage to system may otherwise result.

(3) Purge system thoroughly with clean, dry, compressed air immediately after landing when system has been used in flight, or immediately after discharged on the ground. Absorb residual bromochloromethane remaining on surface areas with dry cloths and clean, dry, compressed air.

(4) Inspect compartments and components that may have come in contact with extinguishing agent for possible damage. Replace defective parts.

(5) Inspect rubber materials and insulations where extinguisher was used. Replace when found defective.

(6) Relubricate all lubricated parts exposed to extinguishing agent.

(7) Replace overboard discharge indicator disc after system has been discharged.

CAUTION

Disconnect positive electrical lead on solenoid valve before removing container, and do not connect lead until all circuit tests have been completed and firing switch on control panel is in OFF position. Damage to equipment may otherwise result.

(8) Replace discharged container and bonnet assembly with fully charged assemblies.

WARNING

Before attempting to perform continuity test of the fire extinguishing electric circuit, the extinguisher cartridges must be removed to preclude accidental firing during test.

(9) Make a visual inspection of the electrical circuit wiring for obvious damage. Test the continuity of the entire circuit excluding the fire extinguisher container cartridge.

NOTE

Install cartridges in the assigned locations (see DA Form 2408-18) to preclude incorrect age life control removals at a later date.

9-16. HOIST SYSTEMS. The hoist system which provides a means of raising and lowering equipment or personnel during flight or ground operation is of two types: hydraulic and electric.

a. Hydraulic Hoist System. Maintenance and testing procedures for hydraulic hoist systems are explained in the following paragraphs.

(1) Maintenance of hydraulic hoist system. Maintenance of the hydraulic hoist system consists of replacement of defective parts using the following procedures:

(a) Service system with fluid, MIL-H-5606, and maintain indicated reservoir level.

(b) Cap all tubing disconnected during removal of units to prevent entry of foreign matter.

(c) Replace damaged tubing. Use old tubing or a piece of string as a pattern in routing new tubing.

(d) Reuse fittings of hose and tube assemblies unless damaged.

NOTE

Clean and thoroughly flush tubing and hose prior to installation.

(e) Replace hoist cable when kinked or when cable has broken.

(f) Replace micronic filters periodically to assure delivery of uncontaminated fluid.

(g) Lubricate hoist as prescribed in the applicable aircraft maintenance manual.

(2) Testing of hydraulic hoist system. Test hydraulic hoist system for operation periodically (and when a new unit is installed in the system) by performing a functional check using the following procedures:

NOTE

Use an external hydraulic test unit or the aircraft hydraulic system with engine operating.

(a) Check operation of down-limit switch by unwinding winch to Its limit to assure that winch will stop when cable If fully unwound.

(b) Check operation of up-limit switch by running cable until up-limit switch is actuated.

b. Electrical Hoist System. Maintenance and testing procedures for electric hoist systems are explained in the following paragraphs.

(1) Maintenance of electric hoist system. Maintenance of the electric hoist system consists primarily of replacement of defective parts using the following procedures.

(a) Replace hoist cable when kinked or when cable has been broken strands.

(b) Replace monorail attaching parts when found to be defective.

(c) Lubricate hoist as prescribed in the applicable aircraft maintenance manual.

(2) Testing of electric hoist system Perform a functional check, to test the electric hoist system for operation periodically, and when a unit or electrical wiring is replaced in the system.

9-17. Oxygen Systems. Oxygen system types, maintenance, and servicing is explained in the following paragraphs.

a Oxygen System Types. The design of the various oxygen system types used in aircraft depends largely on the type of aircraft, Its operational requirements, and, where applicable, the pressurization system. In some aircraft a continuous-flow oxygen system is installed for both passengers and crew. The pressure demand system is widely used as a crew system, especially on the larger transport aircraft. Many aircraft have a combination of both systems which may be augmented by portable equipment.

(1) Continuous-flow system. The continuous flow oxygen system is shown in figure 9-35. The oxygen flows from the charged cylinder through the high-pressure line to the pressure-reducing valve, which reduces the pressure to that required at the mask outlets. A calibrated orifice in the outlets will control the amount of oxygen delivered to mask.

(2) *Pressure-demand system.* A simple pressure-demand oxygen system is shown in figure 9-36. Note that there Is a pressure-demand regulator for each crewmember, who can adjust the regulator according to his requirements.

b. Maintenance of Oxygen Systems . Maintenance of oxygen systems Is described in the following paragraphs.

(1) *Oxygen leaks.* Use soap test to locate leaks unless individual leaks are large enough for personnel to hear or feel. Apply soap solution, using mild soap, A-A-50, to suspected part using a soft brush and watch carefully for frothing, bubbling, or growing bubbles

WARNING

Do not allow petroleum base products to come in contact with components of the oxygen system, as explosion or fire may result.

CAUTION

Drain tubing of all solutions and blow out with oxygen prior to installation in aircraft. Contamination may otherwise result.

(2) *Tubing and fitting*s. Maintenance, repair, replacement, and Installation of oxygen system tubing is given in TM 1-1500-204-23-2.

(3) *Cylinders* Replace all damaged cylinders. No maintenance is authorized on installed low or high pressure cylinders.

NOTE

All low pressure oxygen cylinders which carry a maximum charge of 450 psi will be painted yellow. High pressure oxygen cylinders which carry a maximum of 2000 psi will be painted green.

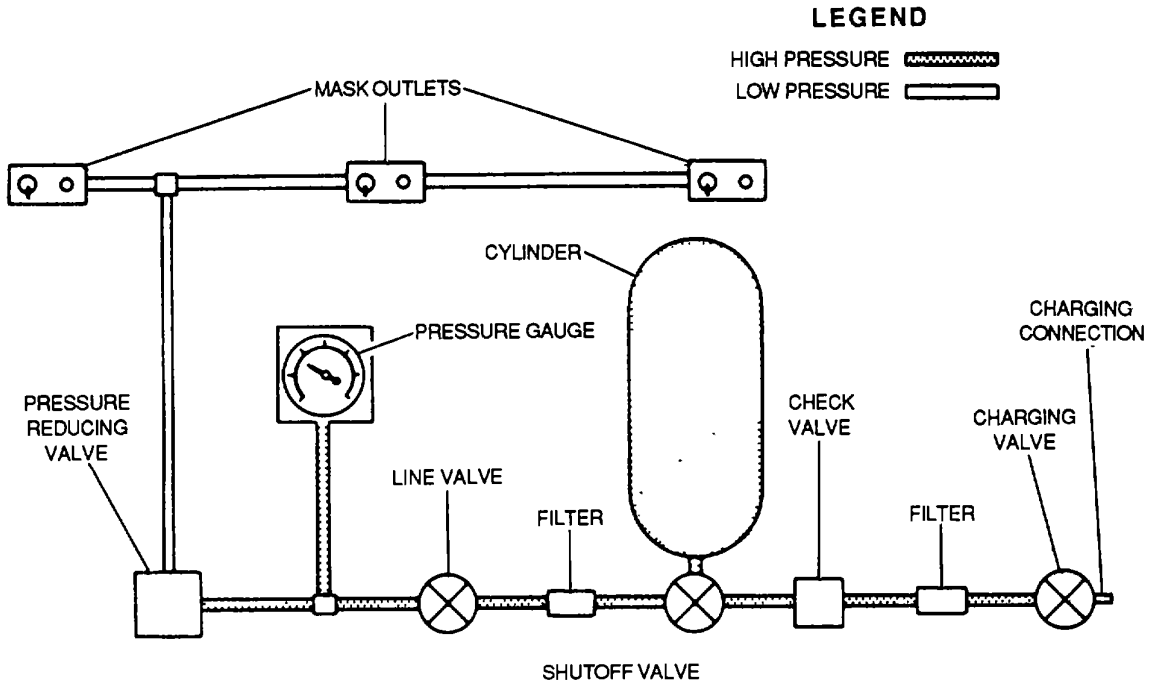

Figure 9-35. Continuous Flow Oxygen System

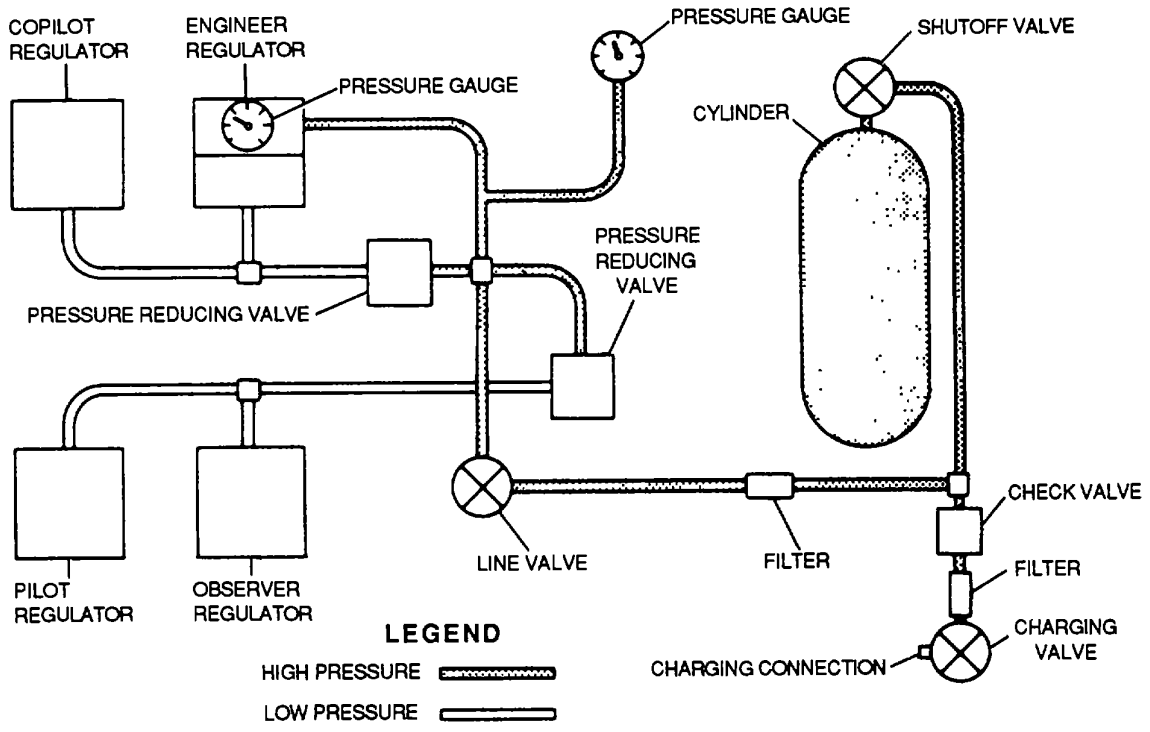

Figure 9-36. Pressure-Demand Oxygen System

(4) *Check valves.* Replace all faulty check valves as complete units. Check valves cannot be repaired.

WARNING

Do not use masking tape to seal openings in oxygen regulators. Its use on either serviceable or repairable oxygen equipment constitutes a safety hazard.

(5) *Regulators.* Do not apply oil or grease to any part of an oxygen regulator.

(6) *Flexible hose.* Maintain flexible hose using the following procedures

(a) To remove contamination other than oil and grease from flexible hose, remove hose and clean with mild soap, A-A-50, and warm water solution, thoroughly rinse with fresh water and thoroughly dry with a stream of clean, dried, water-pumped air or nitrogen.

(b) Replace hoses damaged or contaminated with oil or grease. Repair and replacement procedures for flexible hose are outlined in TM 1-1500-204-23-2.

(c) Examine fittings for tightness.

(7) *Open lines.* Plug or cap all open lines and equipment when opening system for replacement of any part When system has been accidentally left open, system will be purged by one of the following methods:

- In aircraft having filler lines connected to one end of cylinder, and distribution lines connected to opposite ends of cylinder, purging will be accomplished by connecting a service trailer to aircraft filler valve With all regulators open, pass oxygen through system for at least 30 minutes at a pressure of 50 psi at filler valve.

- In aircraft having filler lines and distribution lines commonly connected at one end of cylinder, purging will be accomplished by filling system with oxygen and then draining system This cycle shall be performed at least three times.

(8) *Charging after flight.* Charge oxygen system on aircraft that have had all the oxygen supply drained during flight within two hours after landing. When oxygen system is not charged within two hours after landing, system will be purged.

NOTE

- **Do not use lubricant other than antiseize tape, MIL-T-27730, on aircraft oxygen systems.**

- **Do not use cleaning solutions, or any other solutions, inside any part of oxygen system when Installed in aircraft.**

- **Do not use any gases other than oxygen Inside any part of oxygen system when Installed in aircraft.**

c. Servicing of Oxygen Systems. Prior to servicing an aircraft oxygen system, personnel shall familiarize themselves with the system, precautions, and instructions for handling gaseous oxygen, operation of servicing equipment, and potential hazards involved. Oxygen servicing requires the utmost precautionary measures due to the highly explosive and flammable capabilities of oxygen All personnel shall heed the following precautionary procedures when servicing:

CAUTION

Only qualified personnel shall be authorized to operate equipment for servicing of an aircraft oxygen system Damage to equipment may otherwise result.

(1) Aircraft shall not be serviced with oxygen when any of the following conditions prevail:

- Aircraft electrical switches are on.

- Ground powered equipment is operating within 50 feet of the servicing area.

- Aircraft is being serviced with fuel, oil, or anti-icing fluids.

- Any combustible materials, fluids, etc., are evident around oxygen servicing equipment.

(2) When aircraft is being serviced with oxygen within 50 feet of an area where smoking is permitted, NO SMOKING signs shall be placed at a 50-foot radius around the servicing area.

(3) All aircraft parked outside will be grounded and bonded, in accordance with FM 1-500, to the aerospace ground equipment while servicing oxygen systems.

CAUTION

Oxygen equipment shall be kept clean at all times. No organic matter or flammable substance of any nature shall be allowed to contact oxygen. Ensure that all components of the systems are free of moisture, oil, and grease at all times. Oxygen is a nonflammable gas; however, it supports combustion and lowers the flash or Ignition point of all combustible materials. Oxygen shall be handled as a flammable gas.

(4) To prevent overfilling of tanks, personnel shall observe aircraft oxygen system gauges at all times during servicing operation.

(5) Personnel shall be stationed at the oxygen servicing unit at all times during servicing operation to shut off unit valves immediately upon receiving a command from personnel watching aircraft system gauge.

(6) Service aircraft from cylinders clearly labeled DRY or AVIATOR'S BREATHING OXYGEN. Other Oxygen may have moisture which could cause flow stoppage at temperatures below freezing.

(7) Always use a pressure-reducing device when servicing low-pressure oxygen system from high pressure bottles.

(8) Fill oxygen system slowly to prevent explosion resulting from heat generated by filling too fast.

(9) An aircraft oxygen system not equipped with shutoff devices at cylinders shall be completely discharged of all pressure prior to removing components. All electrical power shall be shut off during oxygen discharge operations.

(10) Refer to applicable aircraft maintenance manual for additional information and maintenance procedures.

9-18. Relief Tube System. Maintenance of relief tubes primarily consists of cleaning and replacing of parts. Clean or replace parts using the following procedures:

a. To clean and deodorize relief tube systems, a solution of 1 1/2 ounces of MIL-SPEC A-A-1634 general purpose deodorant and 5 gallons of water will be used to wash area around relief tube exit and relief tube entrance.

b. Pour remainder of solution through the tube. When an offensive odor remains, use a stronger solution and reclean until odor is removed.

NOTE

The area of relief tube exhaust will be primed with zinc chromate primer, Federal Specification TT-P-1757, and painted with acid proof lacquer, Federal Specification TT-L-54.

c. Replace deteriorated hose, broken or damaged horn, and broken or damaged attaching parts.

NOTE

Install hose so as to eliminate any residue pockets.

9-19. Windshield Wiper System. Maintenance and adjustment of the windshield wiper system is explained in the following paragraphs.

a. Maintenance of Windshield Wiper System. The maintenance of the windshield wiper system consists primarily of replacement of defective parts, as follows.

(1) Replace wiper motor, wiper units, wiper arms, and flexible cables that are inoperative, cracked, bent or otherwise defective.

(2) Replace wiper blades that are worn, deteriorated, or torn, or when rubber has lost its elastic qualities.

b. Adjustment of Windshield Wiper System. The windshield wiper system shall be adjusted as follows:

CAUTION

Do not operate wipers on dry glass.

(1) Loosen locknut on wiper blade, align blade, and tighten locknut.

(2) Remove locknut from wiper unit shaft, adjust position of arm on shaft to give full sweep on windshield, and reinstall locknut.

(3) Adjust tension nut at base of wiper arm until blade exerts 1 ½ to 2 pounds pressure against windshield.

NOTE

Measure tension at tip of wiper arm in a direction perpendicular to windshield surface.

9-20. Aircraft Seats. Maintenance of aircraft seats shall be accomplished in accordance with the procedures explained in the following paragraphs.

a. Troop Seats. Cleaning, repair and installation and removal procedures for fabric or cotton canvas troop seats are explained in the following paragraphs.

(1) Cleaning. Clean troop seats as follows:

(a) Unfold and place parts face up.

(b) Brush with a firm bristle brush to remove excess dirt.

(c) Prepare a cleaning solution of 1 ounce of anionic synthetic detergent (alkyl benzene sulfonate), Federal Specification P-D-410, per gallon of water.

(d) Work up heavy suds by repeatedly squeezing of a sponge saturated with detergent solution. Apply heavy suds to soiled areas.

(e) Scrub soiled areas briskly, using a firm bristle brush or heavy cloth. Wipe off with a damp cloth.

(f) Allow treated area to dry. Brush to raise nap.

WARNING

Degreasing Solvent, MIL-PRF-680, is combustible and toxic to eyes, skin, and respiratory tract. Wear protective gloves and goggles/face shield. Avoid repeated or prolonged contact. Use only in well ventilated areas (or use approved respirator as determined by local safety/industrial hygiene personnel). Keep away from open flames or other sources of ignition.

(g) Remove grease spots with degreasing solvent, MIL-PRF-680.

(h) Remove blood stains by use of cold water applied with sponge. Remove residue with a 10 percent solution of ammonia hydroxide, MIL-STD-612, or a paste of cornstarch, Federal Specification N-C-541. Allow treated area to dry. When cornstarch is used, brush dried material from fabric.

(2) Repair. Repair and patch fabric material of troop seats using repair procedures outlined in paragraph 9-22.

(3) Installation and removal. Follow instructions contained in the applicable aircraft maintenance manual for installation and removal procedures.

b. Metal Seats. Cleaning, repair, and installation and removal procedures are explained in the following paragraphs.

WARNING

DELETED

(1) Cleaning. Clean with clean cloth moistened with degreasing solvent, MIL-PRF-680.

(2) Repair. Patches and reinforcement repairs to metal seats will be accomplished in accordance with repair procedures in TM 1-1500-204-23-10.

(3) Installation and removal. Follow instructions contained in the applicable aircraft maintenance manual for installation and removal procedures.

c. Upholstered Seats. Cleaning, repair, and installation and removal procedures are explained in 'the following paragraphs.

(1) Cleaning. Clean upholstered seats by using cleaning materials and methods as prescribed in paragraph 9-20a.

(2) Repair. Repair small rips or tears with a sewed or unsewed patch. Attach unsewed patches with adhesive, Federal Specification MMM-A-1617.

(3) Installation and removal. For instructions installation and removal, refer to the applicable maintenance manual for particular aircraft.

d. Raschel Knit Seat Covers. Raschel knit seat cover maintenance limits are listed below:

- Deterioration or discoloration which indicates a strength decrease to the point where it affects the integrity of the seat(s) is not allowed.
- Tears, cuts, or holes greater than 2.5 inch in length or diameter are not allowed; the seat should be replaced.
- Tears, cuts, or holes less than 2.5 inch in length can be repaired. Repair is not allowed for seat covers with holes, cuts, or tears in raschel kit material that are located close to the seams of the adjoining panels and do not allow sufficient space for the darning procedure. Repair should be used as a temporary measure until new seat covers or back covers can be installed. In the fine-mesh duck cloth surrounding the raschel knit material, tears, cuts and holes up to 2.5 inches in length can be repaired. A different method for repairing is required and is as follows:

  Tears, cuts or holes less than 0.5 inch in length may be repaired by stitching which extends 0.5 inch into the sound material surrounding the damaged area.

  Tears, cuts or holes of up to 1.0 inch in length may be repaired with the use of a patch made of the same material as the seat cover. Locate on the underside of the damaged area and sew a zigzag stitch over the tear area and into patch extending 0.5 inch into the sound material surrounding the damaged area.

  Tears, cuts, or holes of 1.0 to 2.5 inches in length may be repaired with the use of a patch made of the same material as the seat cover. The patch should be sized to extend 1.0 inch in all directions to the damaged area and include 0.50 inch of material to fold under to finish all the edges of the patch. The patch should be located on the underside of the damage area with the folded edges to the inside. Zig-zag sew the damage area into the patch, followed by a minimum of two (2) rows of stitching around the patch using 6-9 stitches per inch.

NOTE

A 24 month service life pertains only to those covers which are used in an energy attenuation application.

- Replace the original nylon spall shield, or use new ballistic nylon MIL-C-12369 for replacement. Apply a thin even coat of contact adhesive EC 1300L (FSCM 04963) to the tile surface. Allow adhesive to dry until tacky. Carefully mate the spall shield to the tile, working it on by hand pressure. Fit the nylon snugly over the fiberglass patch (or patches). Do not wrap the spall shield over the edge of the panel. Tears in the spall shield shall not exceed 3 inches. Any unbonded area of the spall shield, (as evidenced by bulges), shall not exceed a diameter of 1 inch.
- Seat covers made of raschel knit nylon cloth shall have a service life of 24 months. Seat covers that are not marked with an installation date shall be assumed to have the same date as the day of acceptance of the aircraft. Replacement covers shall be marked with contrasting ink conforming to MIL-I-6903. The size of marking shall be of sufficient size and location so that it can easily be read. The following is an example of marking installation date: 7 Mar 88.

e. Polyester Fabric Seat Covers (Uh-60). Cleaning, repair, and installation and removal procedures for polyester fabric seat covers are explained in the following paragraphs.

(1) Cleaning. Clean the polyester fabric seat and back using the following procedures:

(a) Brush fabric with firm bristle brush removing excess dirt.

(b) Use enough liquidto allow complete immersion of the seat cover to be washed.

(c) Mix 3 ounces of low strength laundry soap, Federal Specification P-S-1792, to each gallon of water. Synthetic detergentis permissible as an alternative.

NOTE
The water temperature should not exceed 100°F (37°C).

(d) Immerse one cover at a time in the soap solution, let stand for 20-25 minutes, and hand wash for 5 minutes.

(e) Rinse cover In clean water until all soap is removed.

NOTE
If machine washed, use complete wash and rinse cycles.

(f) Spread covers on a clean surface out of direct sunlight to dry.

(2) Repair. Repair polyester fabric covers using the following procedures.

(a) Inspect for cuts, tears, punctures, bums and broken stitches. Any damage less than 2-1/2 inches long x 1 inch wide in the seat bottom may be repaired. Replace seat bottoms with damage greater than 2-1/2 inches long x 1 inch wide.

NOTE
Seat backs do not have a damage size limit for repair.

(b) All seats will be repaired using polyester thread, Specification Federal V.T. 285 and cloth polyester (P/N SS9512) as required.

(c) Repairs will be accomplished using the details in figure 9-37.

(d) Damage that Is close to the edge of the seat cover which has insufficient space to allow a complete patch pattern will not be repaired.

(3) Installation and removal. For instructions on installation and removal, refer to the applicable maintenance manual for the particular aircraft.

9-21. Aircraft Litters . Litters installed in Army aircraft shall be installed and removed as described in the following paragraphs.

a. *Installation*. Install Litters using litter kits provided with each aircraft. Refer to the applicable aircraft maintenance manual for specific installation procedure.

b. *Removal*. Upon completion of mission involving litters, remove from aircraft and return to supplying agency. Stow litter kit in original container in aircraft when applicable.

9-22. Protective Covers . The instructions contained below are applicable to all types of aircraft protective covers and shields used by the Army.

a. *Installation and Removal Precautions.* Installation and removal precautions for the protective covers are as follows.

- Protective covers shall be Installed to protect airframe ccmponents which are affected by extreme weather conditions.
- Covers shall be Installed when aircraft is to remain in an exposed area for any extended length of time, or when snow or ice is anticipated.
- To keep out dust, rain, and foreign matter, protective shields, such as intake duct and exhaust covers, shall be Installed to cover openings and passages in the aircraft structure and engine nacelle which leads to internal components of aircraft.
- Do not drag covers over sharp objects; prevent contact with ground when Installing and removing.
- Spread wet covers out to dry before folding and storing.
- When installing and removing covers, do not allow attaching buckles to scratch or mar plexiglass sections of aircraft.

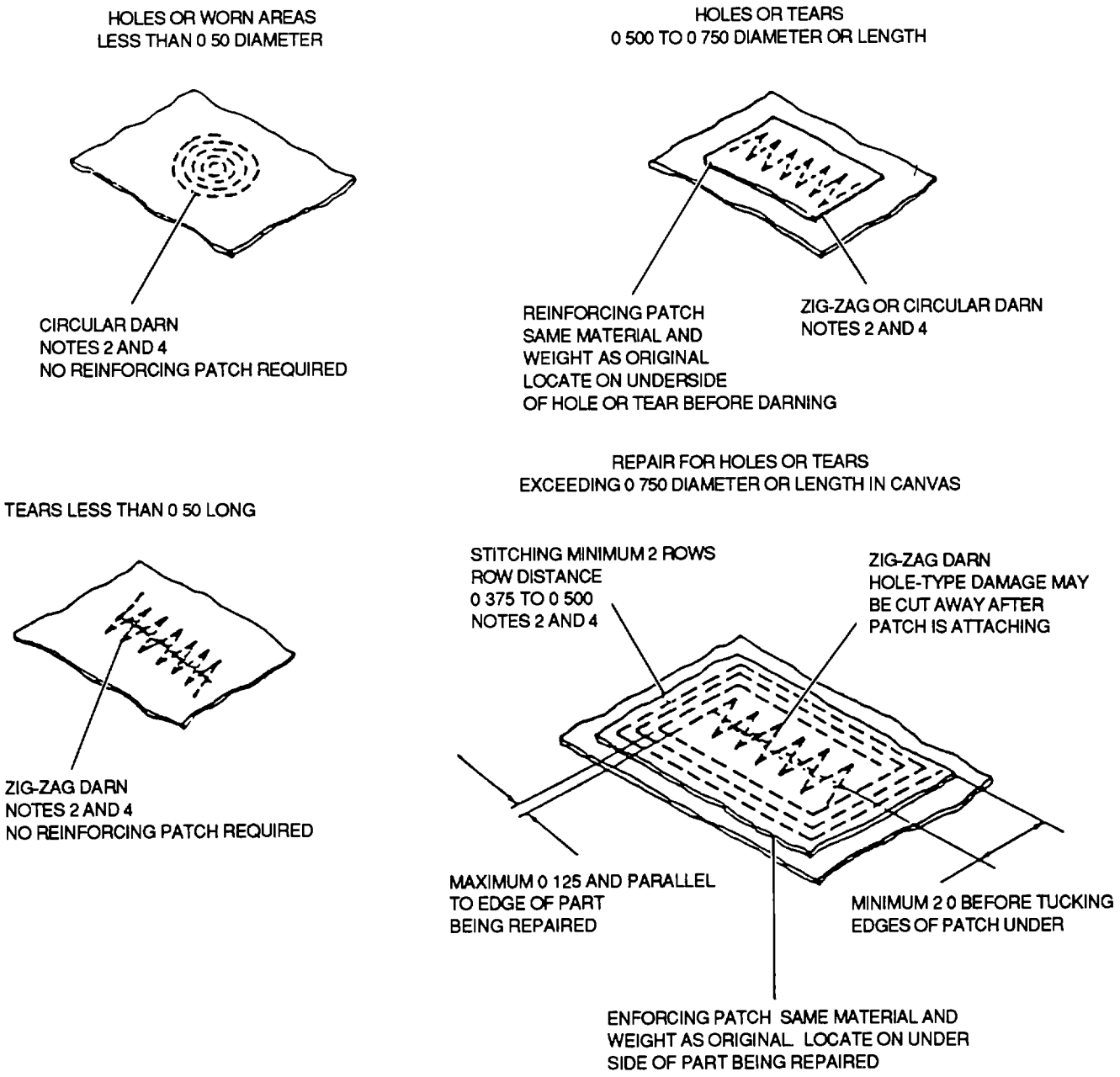

NOTES

1 ALL DIMENSIONS ARE IN INCHES
2 STITCHING TO BE IN ACCORDANCE WITH DDD-S-751 5 TO 8 STITCHES PER INCH DEPENDING UPON WEIGHT OF MATERIAL USE FEWER STITCHES PER INCH FOR HEAVIER MATERIAL
3 INSERT TO BE SAME MATERIAL AND WEIGHT AS ORIGINAL
4 USE THREAD VT285 COLOR TO MATCH COLOR OF ORIGINAL MATERIAL

Figure 9-37. Repair Pattern for Polyester Cloth

b. *Maintenance of Protective Covers.* Cleaning, repair, waterproofing, and storage of protective covers are explained in the following paragraphs.

(1) *Cleaning.* Protective covers contaminated with salts from the atmosphere, specifically chlorides (in marine areas) and sulphur compounds (in industrial areas), can promote corrosion of aircraft skins. Grease, oil, or dirt can mar or discolor plexiglas portions of the aircraft Therefore, only clean covers will be used. Clean protective covers using the following procedures.

NOTE

To increase life expectancy, protect covers against rain, wind, snow, sand, and mildew when not Installed on aircraft.

(a) Remove all possible ropes and wooden attaching parts.

(b) Tape or wrap all attaching parts, such as buckles, snaps, hooks, and D-rings to prevent tearing and snagging of covers during soaking or washing.

(c) Brush soiled section with firm bristle brush to remove excessive soil.

(d) Select a container that will hold enough liquid to allow complete immersion of cover to be washed.

(e) Mix soap solution containing 3 ounces of low strength laundry soap, Federal Specification P-S-1792, to each gallon of water. Synthetic detergents are permissible when available.

NOTE

The temperature of water should not exceed 100°F (37°C).

(f) Immerse one cover at a time in soap solution for a period not to exceed 30 minutes.

(g) Rinse over In clean water until all soap has disappeared.

(h) Spread covers on a clean surface to dry.

(2) Repair. Make prompt repairs to aircraft protective covers to prolong service life. Inspect for damage immediately after use and make repairs using the following paragraphs.

(a) Puncture, snagged, or torn areas. Repair punctured, snagged or torn areas as follows:

1 Repair punctured, snagged, or torn areas by sewing in place a patch of material equal to basic material in weight, quality, and color.

2 Reinforce and darn punctures and small holes (1/2 Inch or less).

3 Trim and turn under frayed edges to make a neat and durable repair.

4 Use circular patches on small holes and rectangular patches on larger holes, irregular snags, or tears.

5 Mend a cluster of holes with one suitable patch, after first removing damaged area and turning under all edges.

6 Provide best possible water drainage by extending patch seams diagonally from centerline of cover section whenever possible.

7 Do not extend patches over more than one section of cover (seam to seam).

8 Restitch all open seams. Stitch pattern and type thread will follow as near as possible the type stitch and thread used in original construction of item being repaired.

(b) *Edge damage*. Repair edge damage as follows.

1 Repair damaged areas along edge of covers where grommets or attaching points are located by folding a piece of material equal to the basic material over damaged area by sewing In place.

2 Replace corner areas where attaching points are located by sewing on a patch composed of three thicknesses of material equal to basic material.

3 Replace any worn or missing webbing keepers, defective elastic webbing, or reinforcement patches.

(c) *Attaching equipment damage.* Repair attaching equipment damage as follows.

1 Repair, when practicable, or replace all damaged attaching equipment such as straps, buckles, webbing, keepers, cords, cables, cable fittings, grommets, etc.

2 Dip ends of all new webbing in a mixture of 50 percent paraffin, Federal Specification VV-W-95, and 50 percent beeswax, Federal Specification C-B-191.

3 Dip ends of sash cords In shellac, Federal Specification TT-S-271.

(3) *Waterproofing*. Restore water, mildew, and weather resistant qualities of a protective cover by coating with water repellent textile finish compound as follows:

WARNING

Solvents contained in the compounds are highly flammable and toxic; therefore all work shall be accomplished In an open area away from any flame.

(a) Stir compound thoroughly until uniform mixture is obtained.

(b) Spread cover out completely on a clean flat surface, with Inside of cover down.

WARNING

Solvents contained In compound may tend to irritate skin, therefore, prolonged contact shall be avoided.

(c) Apply moderate application of compound to outside of cover with a brush or spray.

(d) Apply compound well into seams, as they are particularly susceptible to mildew and leakage.

(e) Dry cover thoroughly until odor of compound has completely disappeared.

(4) *Storage*. Store protective covers as follows:

(a) Fold covers neatly to facilitate easier and faster installation when covers are needed.

(b) Store covers in a dry place on a platform or on slats of wood. Never store covers on ground or concrete.

9-23. Armor Plating . The repair instructions that follow are limited to composite armor composed of a ceramic facing bonded to a fiberglass reinforced plastic backing. The ceramic facing is covered with a flexible spall shield to protect the crew members from ballistic fragments. A rubber molding is also provided on the edges of some panels for crew protection. These repair procedures were developed with the objective of matching, to a high degree, the original strength and ballistic properties of the undamaged armor panel, with a minimum increase in weight. Extending the service life of armor panels will facilitate the mission capabilities of organizational units by the effective use of material assets. The ceramic facing may consist of one of the following materials.

- Aluminum Oxide (AI203)
- Boron Carbide (B4C)
- Silicon Carbide (SiC)

a. *Armor Plating Inspection and Repair Definitions* . Table 9-6 gives definitions relative to inspection and repair criteria.

b. **General Inspection of Armor Plating** . Radiographic inspection of the assembled armor panel is the primary method used for nondestructive testing in determining the extent and location of internal damage. The radiographic skills and equipment required for this type of testing, while available at Depot installations, are not available to Army field units. Therefore, for field units, a visual inspection of the panels must be made, which requires removal of the nylon spall shield. Remove the edge molding and peel off the nylon spall shield. Exercise care when removing the spall shield to avoid damage to the cloth. Use the following inspection procedures.

CAUTION

Handle armor panels with care. Ceramic tile is brittle and cracks easily.

Table 9-6. Armor Plating Definitions

Terms	Definitions
Panel	Each individual removal unit or module of the total assembled armor protective system.
Delamination	Any area where the fiberglass ply or plies have become detached from the binding resign in the reinforced plastic backing.
Backing	The ballistic energy absorber and structural support system for the brittle ceramic tile. The backing is a composite of fiberglass lamination impregnated with plastic resign.
Spall Shield	A cover on the ceramic tile to protect crew members from flying fregments during a ballistic impact. The spall shield is made of nylon cloth MIL-C-12369.

(1) Inspect for the following damages which cannot be repaired In the following substeps (a) and (b), the allowable deviation is zero; therefore the panel must be scraped. In the Note following substep (c) an acceptance tolerance is specified, therefore, do not scrap panels that are within the allowable tolerance Send panel to a higher level of maintenance for repair.

(a) Inspect all panels for ballistic damage. Do not repair armor panels with any ballistic damage (direct hit).

(b) Inspect for cracked resign or ridges in the backing that show evidence of a structural failure.

NOTE

This damage will be matched by a tile crack generally paralleling the failure line in the backing This damage may occur at a weaker reduced sections of the panel, such as the area around the head Accidental blows from tools or hard objects, and the use of armor panels as handholds, are usually the cause of this type of damage Do not repair armor panels with any cracked resin or ridges In the backing.

(c) Inspect the panel for unbonded tiles

NOTE

To check for unbonded tile on armor having multiple tile sections, lightly tap the ceramic surface using a coin Any area that has a lack of bond between the tile and plastic backing should respond with a dull thud, as opposed to the higher pitched sound of a well bonded area However, the distinction between the bonded and unbonded area will not always be clearly evident.

NOTE

To determine a characteristic sound, compare with a well-bonded area, such as along a panel edge. Press firmly by hand all over the tile surface, observing any tile movement on release of hand pressure. Outline any unbonded area on the face of the tile for reference A 100 percent bond between tile and backing Is not required for ballistic efficiency. Do not make allowance for any additional support of the tile by the spall shield. Do not repair armor panels having a total unbonded area In excess of 20 percent for each tile section For monolithic armor (one piece cast tile), the tile bond as a whole should be adequate.

(2) Refer to the repair procedures in paragraph 9-23 d for inspection of damage and for damage limitations other than those specif ed. If the panel is damaged beyond the limits specif ed, it cannot be repaired.

WARNING

Aliphatic Naphtha, TT-N-95, is extremely f ammable and toxic to eyes, skin, and respiratory tract. Wear protective gloves and goggles/face shield. Avoid repeated or prolonged contact. Use only in well ventilated areas (or use approved respirator as determined by local safety/industrial hygiene personnel). Keep away from open f ames, sparks, or other sources of ignition.

c. Adhesives, Resins, and Solvents for Repair of Armor. The following paragraphs explain adhesives, resins, and solvents used for repair of armor.

(1) Adhesives. For adhesives, follow manufacturer instructions concerning storage, agitation, mixing, thinning, temperature, range, f re and health hazards, plus contamination by moisture and dust. The adhesive used for repair can be applied to the fraying surfaces by any convenient means that will give a smooth, uniform spread of the adhesive. Use methods such as a brush, a hand roller, an extrusion gun and squeegee. Clean all tools immediately after each use with Aliphatic Naphtha, TT-N-95. Do not let adhesive polymerize (cure) before cleaning.

NOTE

Use Polysulf de Sealing Compound, PR-1826 B1/2, Class A-2 or B-2 for adhesive. Pro-Seal 890 (FSCM 83527) is a qualif ed product meeting or exceeding the requirements of PR-1826 B1/2. Use Pro-Seal 890, Class B-2 for application by squeegee or extrusion gun. Use Pro-Seal 890BT, Class A-2 for application by brush or hand roller.

(2) Resins. Many tertiary amines, phenolic materials, alcohols and water catalysts accelerate the reaction between the Diethylene Triamine (DTA) curing agent and EPON resin. Although catalysts are used to control the curing rate of resins, they reduce the pot life of a mixture formulation, such as DTA and EPON. Do not use any curing agent accelerators. Since water is an accelerator, avoid any contact of the mixture formulation with water.

NOTE

- As the room temperature decreases the resin curing rate time falls rapid. The DTA curing agent may be applied at a temperature as low as 55°F (13°C), although the time to reach a given stage of cure is at least double that required at normal room temperature.
- The viscosity of the resin may be too high for some methods of application. Add methyl ethyl ketone, TT-M-261, up to a maximum of f ve percent by weight of the total solution content, to lower viscosity.

(3) Solvents. For solvents and cleaning solutions, observe all of the usual precautions for ventilation to prevent the accumulation of toxic vapors and to avoid a f re hazard.

(4) Instructions for Pro-Seal 890 sealant. Instructions are as follows:

NOTE

- Bonding material Pro-Seal 890 consists of two parts: Pro-Seal 890 Sealant and Pro-Seal 890A Curing Agent .
- Both Pro-Seal 890 and its curing Agent Pro-Seal 890A should be used as received. Do not thin with solvent.
- Curing agent Pro-Seal 890A contains no solvent to assure a minimum amount of shrinkage when mixed with Pro-Seal 890 Sealant. Pro-Seal 890A contains an oxidizing compound, therefore avoid prolonged contact with the skin. Wash hands thoroughly before eating or smoking.

(a) Open curing agent Pro-Seal 890A and thoroughly mix it in the container until it becomes a smooth paste.

(b) Thoroughly mix 10 parts of Pro-Seal 890A to 100 parts of Pro-Seal 890 by weight, or 8.4 parts of Pro-Seal 890A to 100 parts of Pro-Seal 890 by volume.

(c) Carefully fold the material upon itself and blend for a period of at least f ve minutes. This will give a satisfactory mix.

NOTE

Avoid violent agitation in order to beat as little air into mixture as possible. Also, frictional heat developed from violent agitation may reduce work life of the material.

(5) Curing requirements for Pro-Seal 890 sealant (2 cure option). Requirements are as follows:

- Mixed, uncured Pro-Seal 890 sealant material (Class A-2 or B-2) requires 72 hours at room temperature for a full cure.
- If the production schedule is not f exible enough to allow for the long-time room temperature cure, accelerated step curing conditions may be employed to fully cure the sealant material in four hours at elevated temperatures. The step curing conditions are two hours at 120°F (49°C), followed by an additional two hours at 158°F (70°C). This means that you should use two ovens set at the two different temperatures specif ed to fully cure the uncured material under accelerated conditions.

d. Repair of Armor Plating. Specif c repairs and inspections for armor plating are described in the following paragraphs.

(1) Repair and inspection of cracked tile. Repair and inspection procedures are as follows:

(a) Inspect for cracked tiles.

NOTE

Multiple cracks converging at an angle of 15 degrees or less are not repairable. You may repair cracks occurring in the ceramic tile 1/16 of an inch or less in width, provided that the backing is not damaged beyond repair. Do not repair armor panels where a crack (or cracks) wider than 1/16 if an inch is found. Total allowable defects are three or less cracks, chips, or spalls in any 2-inch square area.

(b) Repair cracked tile by bonding a 1/8 inch thick sheet of f berglass, type GEE, MIL-P-18177, over the crack (or Cracks) overlapping the damaged area by three (3) inches on each side, using Polysulf de Sealant Pro-Seal 890 (FSCM 83527).

(c) Bevel all edges of the f berglass patch ¼ inch deep and 30 degrees from the top surface so the nylon spa shield will f t smoothly over the patch.

NOTE

For ceramic having raised edges at the joints, one side of the patch may be cut short of the 3 inch overlap requirement. If the crack extends through a raised edge on the tile, shape the patch, by undercutting, to f t over the raised edge. Use good judgment in determining this, bearing in mind that the patch is to restore structural integrity of the panel. When patching along a panel edge, cut patch to f t the edge boundary along periphery of the tile.

WARNING

Aliphatic Naphtha, TT-N-95, is extremely f ammable and toxic to eyes, skin, and respiratory tract. Wear protective gloves and goggles/face shield. Avoid repeated or prolonged contact. Use only in well ventilated areas (or use approved respirator as determined by local safety/industrial hygiene personnel). Keep away from open f ames, sparks, or other sources of ignition.

(d) Remove existing sealant residue from the tile surface by using Aliphatic Naphtha, TT-N-95.

(e) Lightly abrade the f berglass patch and ceramic surface surrounding the cracked area where the patch (or patches) is to be bonded.

(f) Clean the abraded ceramic and patch surface using a clean cloth moistened with Aliphatic Naphtha, TT-N-95. To obtain satisfactory adhesion, apply sealant only to a clean dry surface, free of oil and grease.

NOTE

Do not use reclaimed solvents when preparing a surface for bonding.

(g) Mix Pro-Seal sealant according to paragraph 9-23c(4).

(h) Apply sealant to the ceramic surface, and press the f berglass patch over the crack (or cracks) to be repaired.

(i) Apply metal clamps or weights to the patch to apply contact pressure equal to about f ve pounds per square inch.

(j) Place pieces of 1/8 inch f berglass of ¼ inch plywood pads under the clamps to distribute the clamping force.

NOTE

Do not use rigid pads, as these will concentrate the clamping force on the point of contact and may crack the ceramic tile. Maintenance activities having the necessary equipment may use the vacuum bag method for clamping the patch to the tile surface. The vacuum bag process is used for both fabrication and repair of glass fabric reinforced plastic sheets . The process consists of applying pressure by vacuum and then curing by infrared heat heat lamp or oven. An autoclave is also used to apply heat and pressure for curing.

(k) Cure Pro-Seal sealant according to paragraph 9-23c(5).

(2) Repair and inspection of spalled or chipped tile. Repair and inspection procedures are as follows:

(a) Inspect for spalled or chipped tiles.

(b) Repair spalled areas or chips in the ceramic tile, except at the tile joints that do not exceed 1 square inch, and whose depth (at any point) does not exceed 1/10 of the thickness of the ceramic material.

NOTE

- Do not repair armor panels where spalled areas or chips have a total area greater than 1 square inch or a depth exceeding 1/10 of the thickness of the ceramic material.
- Total allowable defects are 3 or less cracks, chips, or spalls in any 2-inch square area. Edge chips or spalling are acceptable without limit within the ¾-inch edge boundary of the tile around the periphery of the armor panel.

(c) Repair spalled areas or chips occurring in the ceramic, if they do not exceed the limits as specif ed, by applying Polysulf de Sealant Pro-Seal 890.

(d) Fill the chipped or spalled areas with sealant, smooth f ush with the ceramic surface and apply a 1/8 inch thick f berglass patch. The f berglass patch should overlap the chipped or spalled areas by three (3) inches on each side.

(e) Bevel all edges of the f berglass patch ¼ inch deep and 30 degrees from the top surface so that the nylon spall shield will f t smoothly over the patch.

WARNING

Aliphatic Naphtha, TT-N-95, is extremely f ammable and toxic to eyes, skin, and respiratory tract. Wear protective gloves and goggles/face shield. Avoid repeated or prolonged contact. Use only in well ventilated areas (or use approved respirator as determined by local safety/industrial hygiene personnel). Keep away from open f ames, sparks, or other sources of ignition.

NOTE

For ceramic having raised edges at the joints, one side of the patch may be cut short of the three inch overlap requirement. If the crack extends through a raised edge on the raised edge. When patching along a panel edge, cut patch to f t the edge boundary along periphery of the tile.

(f) Remove existing sealant residue from the tile surface by using Aliphatic Naphtha, TT-N-95.

(g) Lightly abrade the f berglass patch, the ceramic surface surrounding the spalled or chipped area where the patch (or patches) are to be bonded, and the inside surface of the chipped or spalled area.

WARNING

Aliphatic Naphtha, TT-N-95, is extremely flammable and toxic to eyes, skin, and respiratory tract. Wear protective gloves and goggles/face shield. Avoid repeated or prolonged contact. Use only in well ventilated areas (or use approved respirator as determined by local safety/industrial hygiene personnel). Keep away from open flames, sparks, or other sources of ignition.

(h) Clean the abraded ceramic surface, including the fiberglass patch and the chipped or spalled surface, using a clean cloth moistened with Aliphatic Naphtha, TT-N-95. To obtain satisfactory adhesion, apply only to a clean dry surface, free of oil and grease.

NOTE

Do not use reclaimed solvents when preparing a surface for bonding.

(i) Mix Pro-Seal sealant according to paragraph 9-23c(4).

(j) Apply Sealant mixture to the ceramic surface, but first fill all spalled or chipped areas with sealant and spread flush with the ceramic surface.

(k) Press the fiberglass patch (or patches) over the filled area to be repaired.

(l) Attach metal clamps or weights to the patch to apply contact pressure equal to about five pounds per square inch.

(m) Place pieces of 1/8 inch fiberglass of ¼ inch plywood pads under the clamps to distribute the clamping force.

NOTE

Do not use rigid pads, as these will concentrate the clamping force on the point of contact and may crack the ceramic tile. Maintenance activities having the necessary equipment may use the vacuum bag methods.

(n) Cure Pro-Seal sealant according to paragraph 9-23c(5).

(3) Repair and inspection of delaminated edges of backing. Repair and inspection procedures are as follows:

(a) Inspect edges of the backing for delamination of the fiberglass layers.

NOTE

A delamination 3 inches or less in length may be repaired. No repairs can be made if a delamination if longer than 3 inches or if panel has more than one delamination.

(b) Remove dirt and grease from the delaminated cavity before repairing as follows:

1 Inject Aliphatic Naphtha, TT-N-95, into cavity with a syringe. Let solution soak for a few minutes to loosen the dirt and grease.

2 Draw out the contaminated naphtha with the syringe, or position the panel to allow the naphtha to flow out by gravity. Repeat the procedure until the cavity is clean.

3 Volatize the naphtha using an electric hot air gun, or vacuum nozzle directed into the cavity. Continue procedure for 10 to 15 minutes. Do not use compressed air because oil and dirt in the air may contaminate the cavity.

(c) Repair delamination of fiberglass plies along the edges of the backing by filling the voids with epoxy resin using a DTA curing agent. Mix 100 parts by weight of EPON 828, MIL-R-9300 (FSCM 36131) with 10 parts by weight of DTA O-D-1271 as follows:

1 Inject the resin with a syringe until the cavity is filled, then brush the edge surface smooth.

2 Attach metal clamps to the repaired area to rebond the fiberglass plies.

3 Place pieces of 1/8 inch fiberglass or ¼ inch plywood pads under the clamps to distribute the clamping force.

NOTE

Do not use rigid pads, as these will concentrate the clamping force on the point of contact and may crack the ceramic tile.

(4) Repair and inspection of internal delamination of backing. Repair and inspection procedures are as follows:

(a) Inspect panels for internal deliminations You can find the location and size of any internal delamination by lightly tapping the fiberglass reinforced plastic backing using a coin or small hammer.

NOTE

- **The tapping sound will be a clear metallic ring over well-bonded areas, and a dull thudding sound over delaminated areas. Trace the outline of and delaminated area with chalk for reference during repair.**

- **Internal delamination up to 4 inches in diameter are acceptable without repair. Although a ballistic degradation does occur from a delamination of fiberglass plies, excessive resin in the delamination cavity has a greater degrading effect. Excessive resin promotes ballistic shearing as opposed to bulging of the fiberglass backing. Do not repair armor panels with any internal delamination in excess of 4 inches in diameter or with more than one area of internal delamination.**

(b) Repair internal delaminations by using a resign and curing agent mixed as specified in paragraph 9-23d(3)(c).

(c) Drill a small hole at each end of the void (marked during inspection).

(d) Slowly inject resin using a syringe until void is filled and epoxy discharges from opposite hole. See figure 9-38 Additional holes may be needed if air entrapment occurs when injecting the resin.

(e) Attach metal clamps or brace the panel in a fixture to apply the required high contact pressure to seal the filled area. Use care to distribute the contact pressure to prevent damage to the ceramic tile.

(f) Cure the panel at room temperature for five days.

NOTE

- **Maintenance activities desiring to repair internal delaminations must have the required tools and fixtures to assure a tight relamination.**

- **If the delamination cavity is filled with resin without rebonding the fiberglass plies, the repair will have reduced ballistic protection.**

(5) Repair and inspection of minor scars and fraying of backing. Repair and inspection procedures are as follows:

(a) Inspect panel for scars or surface abrasion, and for fraying along edges of the backing.

NOTE

After a time, fraying will occur on some permanent, exposed edges of the panel having no protective edge molding. You may repair frayed edges, but only to edges normally having no protective molding.

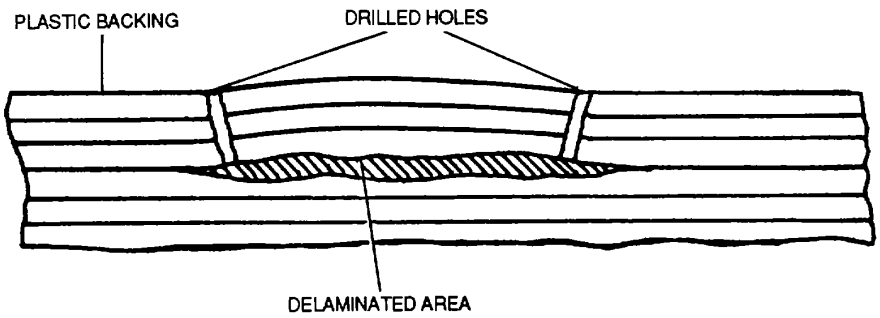

Figure 9-38. Delaminated Repair

WARNING

Aliphatic Naphtha, TT-N-95, is extremely flammable and toxic to eyes, skin, and respiratory tract. Wear protective gloves and goggles/face shield. Avoid repeated or prolonged contact. Use only in well ventilated areas (or use approved respirator as determined by local safety/industrial hygiene personnel). Keep away from open flames, sparks, or other sources of ignition.

(b) Repair scars, scratches, or surface abrasion not penetrating through the facing, or fraying of the edges of the backing by first cleaning the damaged or frayed surface thoroughly and carefully using a clean cloth moistenedwith Aliphatic Naphtha, TT-N-95 (or other approved cleaning agent).

(c) Lightly sand the damaged surface using No. 280 grit abrasive cloth. Clean the surface thoroughly using Aliphatic Naphtha. Remove moisture and solvents completely to prevent inhibiting the curing of the resin .

(d) Apply one or two coats (depending on severity of the abrasion or fraying) of epoxy resin using DTA curing agent. Mix 100 parts by weight of Epon 828-MIL-R-9300 (FSCM 36131) with 10 parts by weight of DTA O-D-1271. Brush the surface smooth. Methyl ethyl ketone may be added to lower viscosity of the solution for brushing using a maximum of 5 percent by weight.

(e) Over this coated surface, apply a sheet of cellophane L-C-110, or polyvinyl alcohol (PVA) film extending 2 or 3 inches beyond the surface. Cellophane or polyvinyl alcohol film will prevent exposure to the air, and will provide a smooth bubble-free surface for the resin to cure.

(f) Tape the cellophane or PVA film in place and work out all air bubbles and excessive resin by hand or by using a rubber squeegee.

(g) Cure at room temperature for 24 hours. After the resin has cured or set, remove the cellophane or PVA film for finishing.

(6) Repair and inspection of cuts and gouges in backing. Repair and inspection procedures are as follows:

(a) Inspect for cuts and gouges in the backing using special care to determine extent of the damage.

(b) Count the number of fiberglass plies that have been damaged as accurately as possible. Mark the number on the backing next to the damaged area.

(c) Repair cuts or gouges not exceeding three layers of fiberglass by first removing successive layers of damaged laminate in approximately oval patches (round corner rectangular patches are permissible).

NOTE

Patches must form a step pattern as shown in figure 9-39. Steps should be at least ¼ to ½ inch long. Use a cutting tool with a controlled cutting depth to facilitate the cutout and to avoid possible damage to the layers underneath.

(d) Remove these sections by peeling from the center and working carefully back to the desired perimeter of the cutout. Cut through the overlaying ply in a series of cuts.

NOTE

Exercise care not to peel back or to rupture the adhesion of the lamination layers beyond the cutout perimeter.

(e) Scrape each step and wipe clean with a cloth moistened with Aliphatic Naphtha, TT-N-95.

(f) Cut pieces of fiberglass cloth, type 181, Cl 2, MIL-C-9084 to extract size, with the weave direction such that they will overlay the original layup.

(g) Use the wet layup technique. Place the first ply of precut cloth on a clean layup table. Spread 45 to 50 percent of resin by weight on the cloth, using a squeegee to thoroughly impregnate all of the fabric.

(h) Layup the resin impregnated cloth in the previously prepared cutout, being careful not to entrap any air under the fabric. Repeat the same procedure with the next ply.

(i) Place the last ply dry in the cutout after first coating the surface of the previous ply with resin.

(j) Replace each piece of fabric being careful to maintain the wet resin content (by weight) between 45-50 percent. Use resin and curing agent as specified in paragraph 9-23d(3)(c).

(k) Cover the repair with cellophane L-C-110 or polyvinyl alcohol (PVA) film and press down to smooth the patch and to expel air bubbles.

(l) Cure at room temperature for 24 hours. After resign has cured or set, remove cellophane or PVA film for finishing.

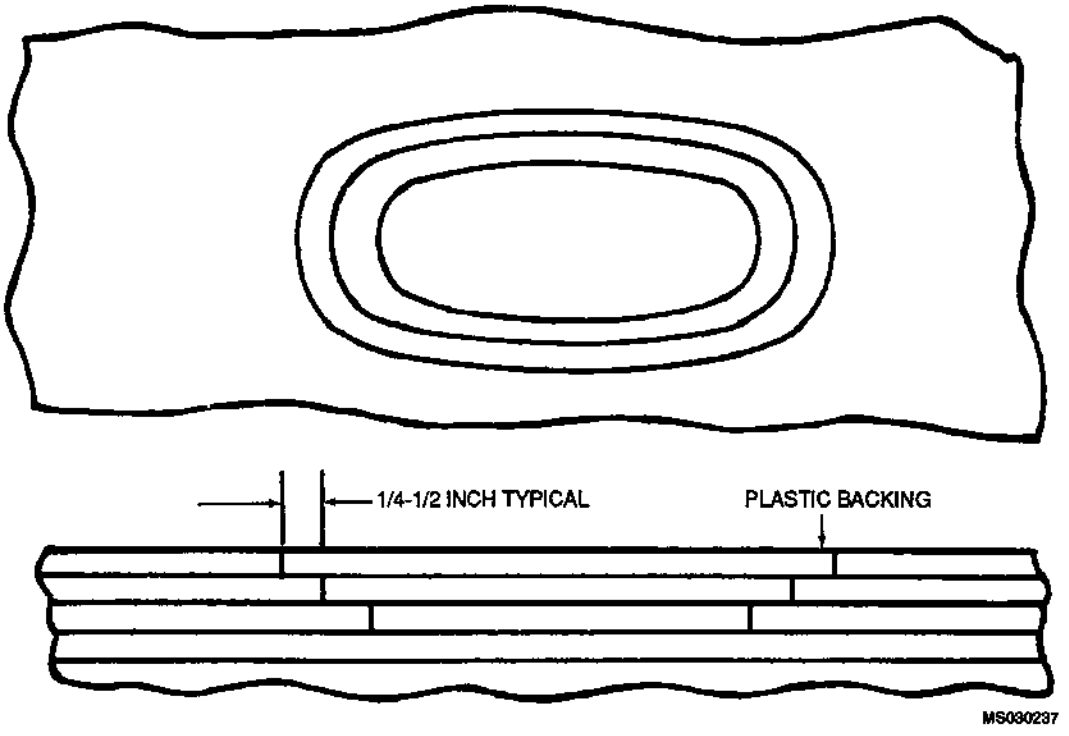

Figure 9-39. Gouge Repair

(m) Sand smooth all repaired areas after curing using No. 320-400 grit abrasive cloth.

(7) Repair and inspection of threaded inserts in backing. Repair and inspection procedures are as follows:

(a) Inspect panel for loose inserts or damaged threads.

NOTE

Inserts in a composite fiberglass-plastic type of backing have a tendency to work loose. It is important to replace any missing insert as the heavy armor panels are severely strained during a shock loading, such as a hard landing.

(b) Repair damaged insert threads, where possible, using the proper sized tap to chase threads.

(c) Where an insert is loose, drill two small holes, 180 degrees apart, in the fiberglass backing next to the insert. Angle the holes toward the bottom of the insert.

(d) Inject bonding compound, Metalset A4 (FSCM 90414) with a syringe into one hole. Fill around insert until compound discharges from second hole.

WARNING

Aliphatic Naphtha, TT-N-95, is extremely flammable and toxic to eyes, skin, and respiratory tract. Wear protective gloves and goggles/face shield. Avoid repeated or prolonged contact. Use only in well ventilated areas (or use approved respirator as determined by local safety/industrial hygiene personnel). Keep away from open flames, sparks, or other sources of ignition.

NOTE

Metalset A4 resin cement is furnished as two compounds, Part A (resin) and Part B (hardener). Thoroughly mix Part A and Part B in a 1 to 1 ratio by weight or volume. Allow bonding compound to cure at room temperature for 24 hours. For accelerated curing cure bonding compound at 150°F (66°C) for two hours. Excess Metalset A4 must be removed before it hardens. Remove excess resin with Aliphatic Naphtha, TT-N-95.

(e) Replace rubber edge molding after abrading the inside surface using a fine wire wheel (0.004 inch diameter wire) or abrasive cloth.

WARNING

Aliphatic Naphtha, TT-N-95, is extremely flammable and toxic to eyes, skin, and respiratory tract. Wear protective gloves and goggles/face shield. Avoid repeated or prolonged contact. Use only in well ventilated areas (or use approved respirator as determined by local safety/industrial hygiene personnel). Keep away from open flames, sparks, or other sources of ignition.

(f) Wipe with a cloth moistened with Aliphatic Naphtha, TT-N-95.

(g) Apply a sufficient amount of contact adhesive 1300L to cover the inside surface of the rubber and the mating surface.

(h) Allow adhesive to dry until tacky.

(i) Carefully fit and press the molding over the edge of the panel.

(j) Clean dirt and dust accumulation from the repaired panel using general purpose detergent. Do not use methyl ethyl ketone for cleaning the fiberglass backing.

CAUTION

Prolonged contact of the fiberglass to methyl ethyl ketone or acetone will result in deterioration of the resin.

(k) Rinse the washed area with clear water and dry panel with a soft cloth. Then permit panel to dry out thoroughly.

(l) Touch up repaired areas of spall shield and fiberglass backing with acrylic lacquer, MIL-L-81352.

(m) Apply a base coat of epoxy primer, MIL-PRF-23377. Feather the primer coating onto to surrounding color coat.

(n) Allow the primer to air dry for a minimum of 30 minutes.

(o) Appy two coats of acrylic lacquer to match the original finish color as applicable.

9-24. Cargo Tiedown Equipment. Cargo tiedown equipment devices may be assembled from webbing, nets, rope, cables, or fittings. Use snaps, hooks, clamps, buckles or other acceptable fasteners. Install tensioning devices or other means to provide a method of tightening and adjusting restraint system. Provide covers or guards to prevent damage to or jamming of aircraft equipment, structure, or control cables. Inspect and repair in accordance with the applicable maintenance manual.

9-25. Vibration Isolators. Vibiation isolators are shock absorbing mountings which absorb vibrations or movements of a component. They are utilized with armament equipment, electronic equipment, photographic equipment, instruments, instrument panels, and other like equipment requiring shock mounting.

a. Type of Vibration Isolators. Vibration isolators are commonly classified in three types: open-type, closed-type, and combined vibration isolator mounting base type.

(1) Open-type. Open-type vibration isolators are those on which the shock absorbing material is exposed, and are usually so constructed that the load is supported on rubber in shear (A and B, figure 9-40) or compression (C, figure 9-40).

(2) Closed-type. Closed-type vibration isolators are those on which the shock absorbing material is enclosed by a metal cup or housing. The shock absorbing material is usually a coil spring, rubber, or metal mesh in compression, or a combination of these materials as shown in figure 9-41.

(3) Combined vibration isolator mounting base type. Combined vibration isolator mounting base type vibration isolators are formed by combining resilient material such as sponge rubber, metal mesh pads, or coil springs with a mounting base and supporting structure as shown in figure 9-42.

b. Installation of Vibration Isolators. Installation of vibration isolators should be accomplished in such a manner as to allow free movement of mounted equipment with adequate clearance around brackets, piping lines, and other items of equipment. Accomplish the following procedures when installing vibration isolators:

(1) Measure vertical and horizontal clearance between equipment and nearest supporting structure.

NOTE

A vertical and horizontal clearance of 1/16 inch shall be maintained. Maintain adequate distance between mounted equipment and nearest object (bracket, pipe, line, structure, etc.).

(2) Move equipment to extreme positions in every direction to ensure that retaining fasteners are secure and the isolators have not sagged.

NOTE

Prior to any attempt to install vibration isolators, the high, or low side, must be found. Each isolator has a low side and a high, or load side. in some instances, the words LOAD SIDE will be stamped in the high side of the isolator to facilitate identification.

c. Inspection of Vibration Isolators. To prevent unsatisfactory isolation and eliminate damage, vibration isolators shall be inspected and replaced in accordance with the applicable phase maintenance inspection checklist. The following are general inspection procedures for all types of vibration isolators:

(1) Using a standard thickness gauge or 6 inch scale, measure vertical and horizontal clearance between isolated load (equipment case, mounting base, or instrument panel), and nearest support structure (isolator mounting cup, mounting base, or aircraft structure) with vibration isolators with any vertical or horizontal clearances of less than 1/16 inch.

(2) Move equipment or instrument panel to extreme positions in every direction to determine if isolators have sagged, or retaining rivets or holddown screws are loose.

(a) When elastic rubber parts of open-type vibration isolators are stretched to their extreme position, examine rubber for cracks, or separation of rubber to metal bond. Replace isolators with any of these conditions visible.

(b) When equipment on combined vibration isolator mounting base is moved to extreme positions in all directions, examine sponge rubber or metal mesh pads for deterioration and permanent packing. Replace vibration isolators with cracked or deformed pads which seriously affect isolation efficiency of mounting system.

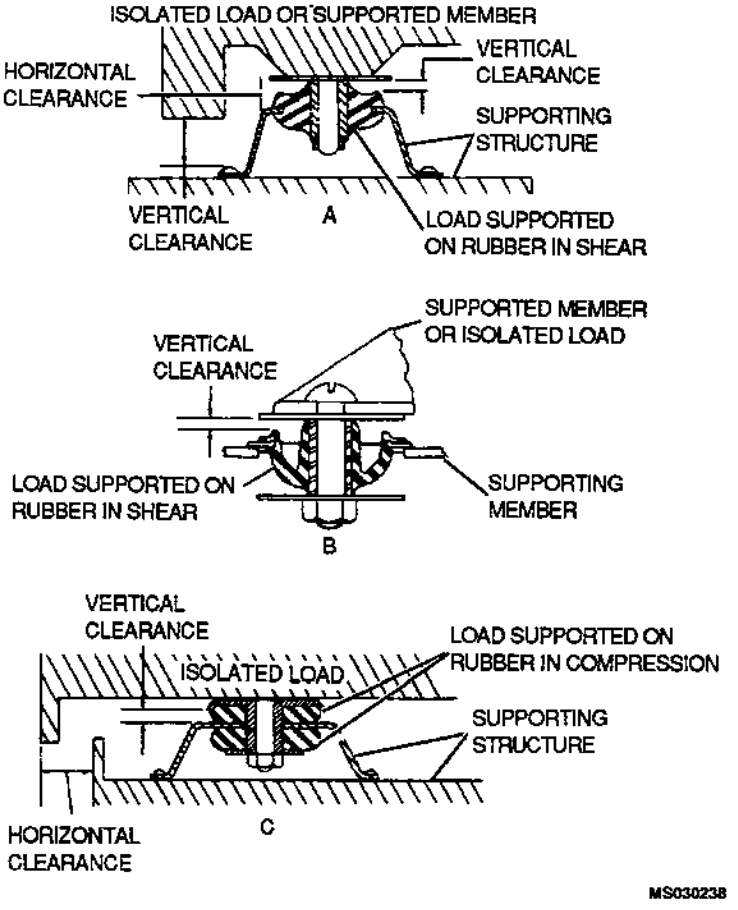

Figure 9-40. Open-Type Vibration Isolators

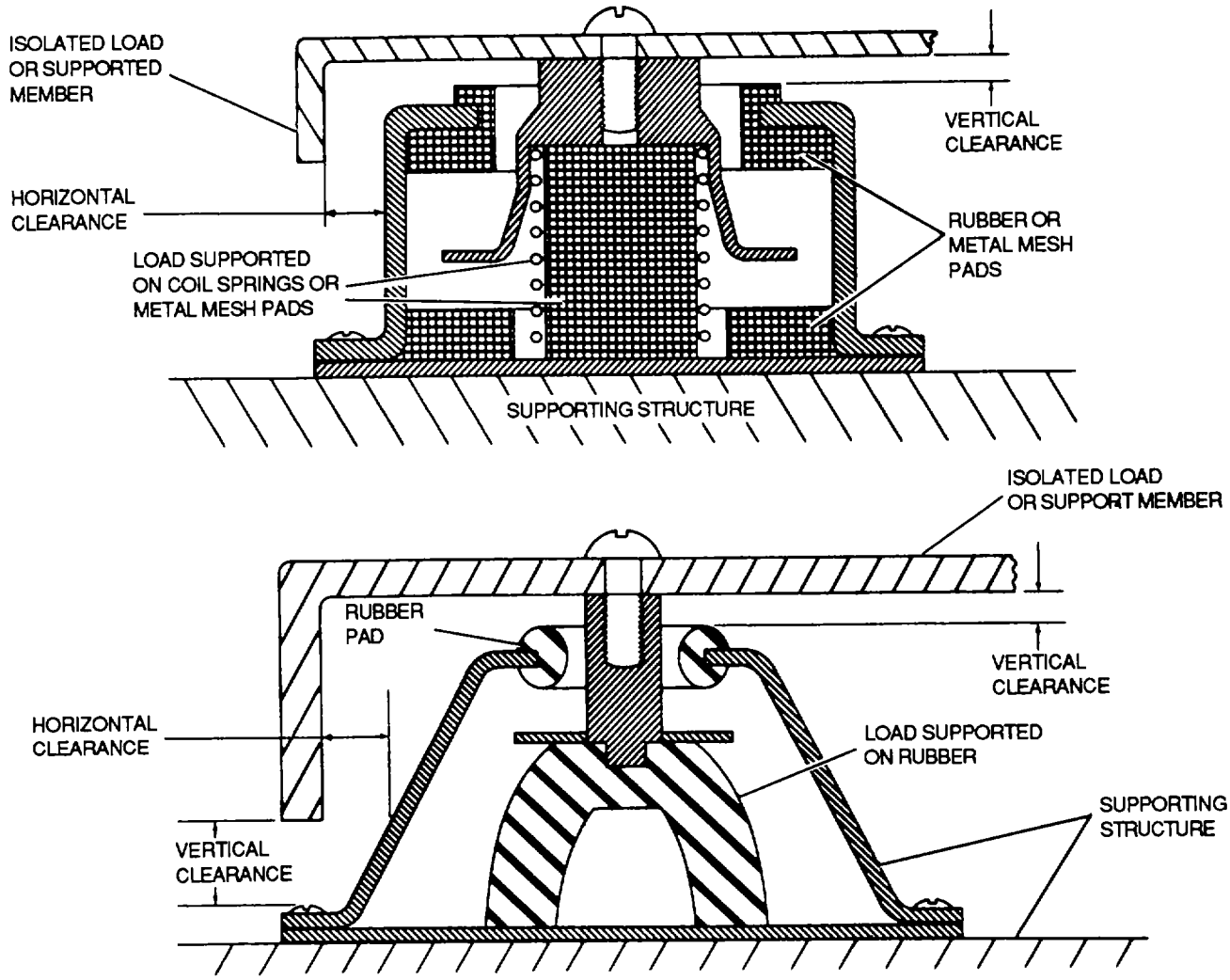

Figure 9-41. Closed-Type Vibration Isolators

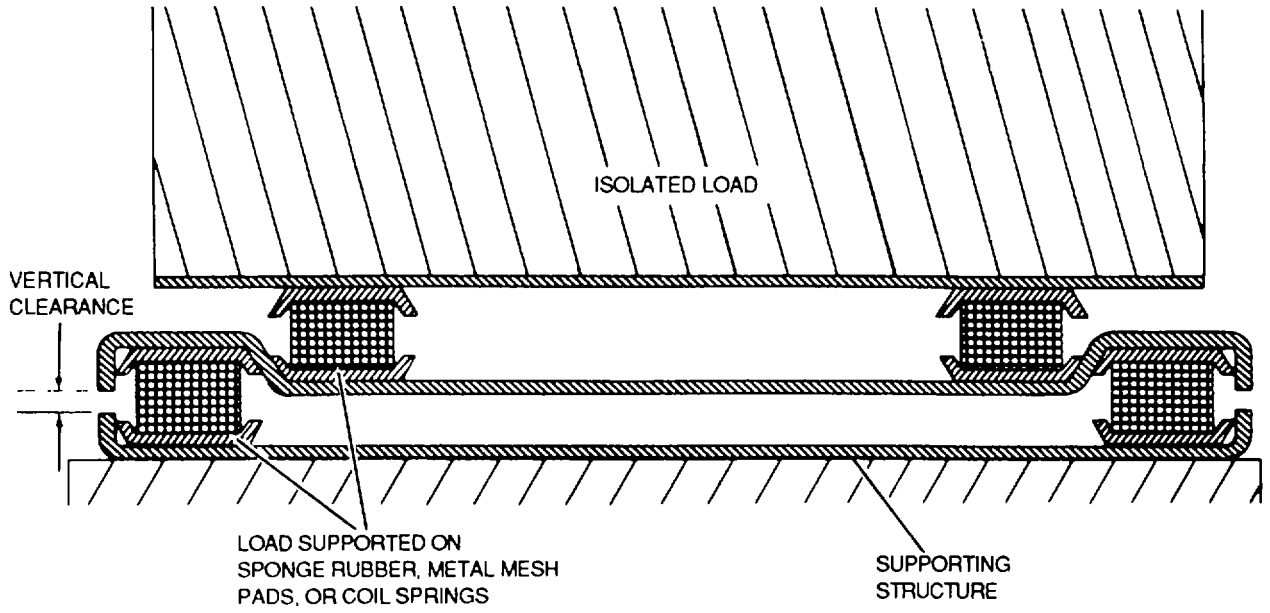

Figure 9-42. Combined Vibration Isolator Mounting Base

9-26. Elastic Shock Cord Assemblies Elastic shock cord assemblies are explained in the following paragraphs.

a. *Inspection and Testing*. Inspection and testing of elastic shock cord assemblies are described in the following paragraphs.

(1) *Inspection.* All cords installed in aircraft shall be visually inspected at each phase maintenance inspection. Any cord that shows irregularity in diameter must be replaced. Cords found to be over five years old will not be considered serviceable Observe the following inspection requirements:

- Cords in stock shall be inspected and tested every six months as specified below. At the time a test is made, a serviceable parts tag shall be affixed to the spool or cord as follows:

  INSPECTED
  DATE..
  ACCORDING TO
  TM 1-1500-204-23-1
  TO BE REINSPECTED AND RETESTED
  6 MONTHS FROM DATE HEREON

NOTE

Sections of cord shipped to service activities shall have a duplicate tag affixed to provide information for reinspection date.

- Cords in stock at all activities other than depots shall be visually inspected for irregularities in diameter or other evidence of deterioration and to see that serviceable parts tag is attached as specified.

- Cords that fail to meet test requirements shall not be installed on aircraft, but will be made available for use on ground equipment or for other uses.

- Cord requiring reinspection will be retested and retagged if facilities are available. If facilities are not available, cord shall be returned to depot for reinspection.

- Cords not suitable nor required for ground equipment or other uses shall be administratively condemned or condition condemned.

(2) Testing. Cords requiring testing shall be tested when facilities are available. When facilities are not available, return cords to depot for testing. Elongation testing should be accomplished in the following manner:

(a) Test bungee or endless ring type cord as a complete unit using suitable jigs or spools and test load specified in table 9-7.

(b) Jigs or spools for stretching shock absorber cords should be smooth and not less than 1 1/2 inches in diameter to prevent damaging cords during testing.

(c) Prepare straight and elastic exerciser cords for testing by marking 6-inch gauge lengths on one side of cord. Use soft lead pencil for marking.

(d) Mark bungee cords with 6-inch gauge marks penciled on opposite sides of ring.

(e) Attach cord to be tested to suitable jigs or spools. Apply specified test pressure slowly.

(f) After test load has been applied, remove cord from rig and measure between gauge marks.

(g) Reject cords which elongate more than 100 percent during test.

(h) Reject cords which have gauge marks more than 6 1/4 inches apart 10 minutes after pressure is released.

(i) After testing, fill in and attach an Acceptable or Serviceable Tag (DD Form 1574) to cord with a note:

To be reinspected and retested 6 months from date hereon.

b. *Fabrication Requirements*. Elastic shock cord used for fabrication of assemblies shall not be over 20 quarters (5 years)old from date of manufacture. Date of manufacture of elastic shock cord shall be determined from table 9-8 Date of manufacture is indicated by colored threads in the cotton braid. The first two colored threads indicate the year of manufacture and the third colored thread indicates the quarter Replace cord using the following procedures.

(1) Cut the elastic shock cord square with a knife or other sharp cutting tool.

Table 9-7. Test Loads

Cord	Diameter Inches	Load pounds
Straight cord	1/4	13
	3/8	80
	1/2	155
	5/8	225
	3/4	360
Endless ring bungee	3/8	155
	7/16	235
	1/2	315
	9/16	380
	5/8	450
	11/16	585
	3/4	720
	113/16	1000
Elastic Exerciser	3/16	5
	5/16	7

Table 9-8. Color Coding

Year Identification		
1984	-	Yellow
1985	-	Black
1986	-	Green
1987	-	Red
1988	-	Blue
1989	-	Yellow
1990	-	Black
1991	-	Green
1992	-	Red
1993	-	Blue
Quarter Identification		
January February March		Red
April May June		Blue
July August September		Green
October November December		Yellow

NOTE

For succeeding years and quarters, this cycle repeats.

(2) Wrap cord with masking tape prior to cutting to prevent raveling of cotton braid during subsequent fabrication or handling operations.

(3) Stretch elastic shock cord to 2 1/4 times its original free length.

NOTE

Stretch fixtures used to elongate elastic shock cord will be capable of securely holding ends of cord without slippage. When elastic shock cord is stretched to twice its original free length, stretch fixture shall not damage cord ends.

(4) Dip or brush cut ends of elastic shock cord with a coat of sealant MIL-S-4383, and allow to air-dry.

NOTE

Coating should be heavy enough to prevent raveling of cotton braid.

(5) Locate lockrings approximately 1/2 inch from ends of elastic shock cord, however, do not extend ends of cord outside body of terminal fastener.

(6) Stretch elastic shock cord 50 percent in area of lockring or splice location prior to crimping lockring in place or serving elastic cord.

(7) Crimp lock rings securely in place to form a continuous ring around elastic shock cord.

(8) Accomplish serving of elastic shock cord using the following items:

- Elastic cord, MIL-C-5651.
- Cotton cord, Style A, No. 10 (Use for serving elastic shock cord 1/2-inch and smaller in diameter.)
- Nylon Cord, MIL-C-5040, Type I (Use for serving elastic shock cord larger than 1/2-inch diameter.)

NOTE

Minimum serving lengths are specified in table 9-9.

Table 9-9. Minimum Serving Length

Elastic cord diameter (Inches) (Inches)	Serving length
1/4	1 1/2
3/8	2
1/2	2 1/2
5/8	3
3 /	4
1	4

c. *Identification*. Colored threads in the outer cover are used to indicate date of manufacture. The color code for threads is given in table 9-8. Bungee and shock absorber cords have two threads to indicate year and one to indicate quarter. Elastic exerciser cords have three threads to indicate year and one for quarter. Elastic shock cord, used in some compass mounts, is covered with a solid black braid with no colored thread to indicate date of manufacture. Although these cords do not have a limited shelf life, they must pass the elongation test before installation.

d. *Fabrication Procedures* . Fabricate elastic shock cord assemblies using the following procedures.

(1) Cut elastic shock cord a minimum of 4 inches longer than required finished assembly length.

(2) Wrap ends of cut elastic shock cord with masking tape to prevent raveling of cotton braid.

(3) Center mark required finished assembly length on elastic shock cord as shown in figure 9-43.

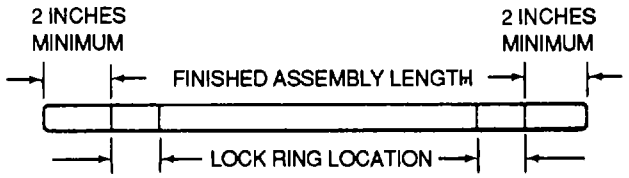

Figure 9-43. Marking Elastic Shock Cord

(4) Measure back from each end of marked finished assembly length a distance equal to lockring dimension specified in table 9-10, and mark this dimension.

Table 9-10. Lockring Locating Dimensions

Cord size	3/8 Inch	1/2 Inch	5/8 Inch
Lockrlng Locating dim	1.5 Inch	2.0 inch	2.25 inches

(5) Install end fittings back to back on elastic shock cord.

(6) Clamp elastic shock cord in a stretch fixture in such a manner that markings for finished assembly length and lockring locations are approximately equal distances between stretch fixture jaws.

(7) Stretch elastic shock cord until distanc between cord markings has increased 50 percent.

(8) Crimp lockrings on cord at marked locations. Crimp each ring until ring ends are in contact with each other.

(9) Remove elastic shock cord from stretch fixture and cut elastic shock cord approximately 3/4 inch beyond lockrings.

NOTE
After cutting elastic shock cord, ends will shrink approximately 1/4 inch.

(10) Dip or brush cut ends of elastic shock cord with a coat of sealant, MIL-S-4383, and allow to air-dry. Coating should be heavy enough to prevent raveling of cotton braid.

(11) Reinstall assembly in stretch fixture, and pull until finished assembly length has increased 50 percent. Ensure that there is no slippage of lockrings or end fittings.

e. *Serving Elastic Shock Cord.* Serve elastic shock cord using the following procedures:

(1) Secure adjacent sections of elastic shock cord in stretch fixture and mark minimum length of cord to be served. Minimum serving lengths are specified In table 9-9.

(2) Stretch elastic shock cords until marked serving length has Increased 100 percent. Maintain this length during entire serving operation.

(3) Use a piece of serving cord of sufficient length to form a loop extending a minimum of 1 inch past mark used to designate one end of elongated serving area.

(4) Form a tail extending a minimum of 6-inches past mark used to designate other end of elongated area, as shown in figure 9-44.

(5) Place loop on top of elastic shock cords over area to be served.

NOTE

Types of serving cord are specified in paragraph 9-26b, step (8).

(6) Hold loop firmly on top of adjacent sections of elastic shock cord and wrap serving cord around elastic shock cord. Make wraps over loop using a half hitch knot in serving cord at completion of each wrap. Pull serving cord tight.

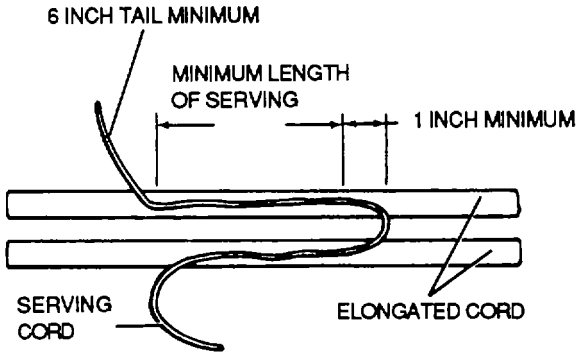

Figure 9-44. Preparation for Serving Shock Cord

(7) Continue serving elastic shock cord as specified above until required length of serving has been applied.

NOTE

While serving, keep tail end of loop outside of half hitches for a distance of half the length of the required serving. Keep it under serving for reminder of required distance as shown in figure 9-45.

(8) When the required length of elastic shock cord has been served, put end of serving cord through loop and pull tail end until both ends have been pulled through. Cut ends of serving cord as close as practical to serving wraps.

f. *Process Control*. The following procedures are used for elastic shock cord process control:

(1) Accomplish periodic checks of storage area to assure requirements of paragraph 9-26b are complied with.

(2) Maintain control of elastic shock cord as specified in TM 1-1500-204-23-6.

(3) Crimp lockrings securely in place with ends of ring in contact with each other.

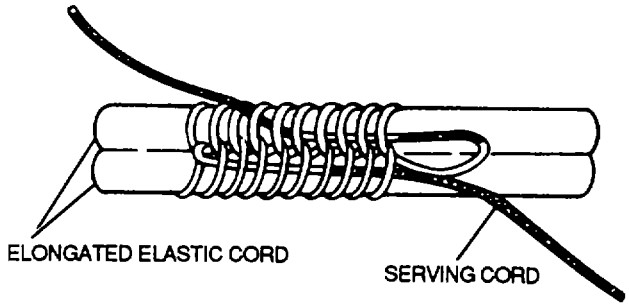

NOTE:
LOOPS AROUND ELASTIC CORD ARE SHOWN SEPARATED FOR CLARITY OF SERVING OPERATION.

Figure 9-45. Serving Elastic Shock Cord

NOTE

Slight marking on ring caused by crimping tool shall not be cause for rejection. Cotton braid caught between crimped ends of lockring will not be cause for rejection providing no elastic bands In shock cord are pinched or cut.

(4) Assure that minimum of 1/2 inch of elastic shock cord extends beyond last wrap of serving cord.

(5) Test finished elastic shock cord assemblies as outlined in paragraph 9-26d, step (11).

g. Storage of Elastic Shock Cords. In addition to the general storage requirements for rubber items in TM 1-1500-204-23-6, the following practices shall be employed during storage of shock absorbers and elastic exerciser cords.

- Store cords so they shall not be subject to stresses.
- Keep stocks of cord at a minimum, but consistent with operating requirements.
- Maintain temperature of storage area between 32 and 80 °F (0 and 270C) when possible During summer months, keep elastic shock cord and assemblies In the coolest part of the storage area.
- Locate storage area where elastic shock cord and assemblies shall be free of contact with oil, grease, solvent, fumes, direct sunlight, or local heat concentrations. Avoid storage adjacent to steam pipes, space heaters, or like conditions.
- Do not store items containing chemicals harmful to rubber products near elastic shock cord and assemblies.
- Store elastic shock cord and assemblies from storage areas for manufacture or delivery on the basis of the oldest material being used first. This assures that no cord shall spend an excessive time in storage and thus lessen its active service life.
- Dispense elastic shock cord and assemblies from storage areas for manufacture or delivery on the basis of the oldest material being used first. This assures that no cord shall spend an excessive time in storage and thus lessen Its active service life.

CHAPTER 10

ARCTIC, DESERT, AND TROPIC MAINTENANCE

10-1. General. Arctic, desert, and tropic maintenance, inspections, and operations are explained In the following paragraphs.

10-2. Arctic Maintenance. The following paragraphs contain the basic principles and procedures which are essential for efficient utilization of aircraft, equipment, and personnel in arctic areas. The operation of aircraft In arctic regions is seriously handicapped because of the effect of the elements on both personnel and equipment. With a decrease in temperature, an increase In time required to perform duties is inflicted due to reduced flexibility of packings and rubber parts, higher viscosity of lubricants, and binding of metal parts due to contraction. General procedures for all aircraft are discussed within these paragraphs. For specific problems on a particular aircraft or piece of equipment, refer to the applicable maintenance manual.

a. *Precautions.* Maintenance personnel shall observe the following precautions as a guide to successful performance of duty In severe weather.

(1) Exercise care when stepping or walking on snow or frost-covered or very cold surfaces. Wearing proper shoes will aid In walking on slippery surfaces and reduce the possibility of injures from slipping.

(2) Exercise caution when touching very cold metal with bare hands, moisture on hands will tend to freeze skin to metal. When practical, wear gloves and cover metal tool handles.

(3) Do not exert excessive torque or tension on bolts, nuts, cables, or similar items when making repairs on equipment that has been exposed to extreme cold. These items tend to freeze or snap as metal expands upon warming.

b. *Preheating.* The following paragraphs explain general procedures for preheating aircraft and engines.

CAUTION

Do not permit air from heaters with temperature In excess of 251°F (122°C) to blast against ignition harness, flexible hose, self-sealing tanks, or other rubberized or fabric materials. Damage may otherwise result.

(1) *Preheat requirements*. Engine preheat is normally required only on reciprocating engines. Jet engines do not require preheat unless the available auxiliary power unit is not sufficient to overcome additional starter loads. Preheat requirements can be considerably reduced by following proper oil dilution procedures.

(2) *Preheat for starting*. At low temperature, apply heat to engine as a starting aid. Reduce starter loads by preheating engine, thereby reducing oil viscosity. Generally, preheat will not be required If temperature is above 0 °F (-180C) and engine oil has been properly diluted.

(3) *Preheat time.* Preheat time required to prepare an engine for starting depends on outside air temperature, size of engine, heater output, and velocity and direction of wind. Also, when oil dilution, method of preheat application, or use of covers and nose shields are inefficiently applied, the required preheat time will be lengthened.

(4) *Preheat application*. Apply heat to both the power and accessory sections until cylinder heat, temperature reaches 68 °F (20 °C). Do not rely entirely upon temperature gauge as readings may be misleading because of thermocouple being located in path of heater blast. Where heater supply is limited, concentrate heat on rear accessory section, particularly main oil drain, oil lines, and oil sump, with second priority going to nose gear, propeller hub, and power section.

(5) *Preheat for accessories* . At temperature below -22°F (-30°C), apply heat to batteries, feathering pumps, master brake cylinder, and actuating cylinders. Aircraft with constant speed drives for alternators should have drives heated.

(6) *Heater placement*. Prevent possible heat loss during preheat period by placing heaters as close as possible to aircraft, but avoid areas under fuel and oil drains, vents, or supplies Inspect heater ducts for leaks. Cover heater and ducts with noncombustible canvas covers Provide adequate fire bottles In flight area.

CAUTION

Do not apply heat directly against plastic or plexi-glass windshields or windows. Directly applied heat will cause crazing, cracking, and discoloration. Remove existing snow deposits before heating crew compartment. When cabin heat is applied on the ground with temperatures below freezing, the snow will melt and cause accumulation of Ice on top of fuselage and windshields.

(7) *Preheat off light compartment*. Apply heat to flight compartment and cabin to ensure operation of instruments and equipment, reduce windshield frosting, soften canopy seals, and Increase crew comfort. Heater ducts may also be positioned so as to direct heated air toward any valves found to be sticking. Preheat vacuum pumps in aircraft employing vacuum-driven Instruments to ensure low viscosity of oil In and around pumps and to prevent pump drive shaft from shearing.

c. *Pre flight.* The following procedures and inspections shall be accomplished during preflight for aircraft operating in arctic conditions.

(1) During severe weather, delay removal of engine covers, propeller covers, flight compartment covers, and miscellaneous covers until just prior to engine start. Leave wing and empennage covers in place until just prior to taxiing.

CAUTION

Exercise care to prevent flow of melted Ice into areas where freezing would cause restricted movement of flight controls and restricted flow of air through vents. Where water flows toward any of these areas, It shall be mopped up Immediately.

(2) Inspect entire aircraft for snow, frost, or ice. Any deposit can cause loss of lift and treacherous stalling characteristics. Brush off loose snow or frost. Remove remaining ice by spraying or brushing on a coat of anti-icing and deicing-defrosting fluid, MIL-A-8243. Work from upper surfaces downward to prevent accumulation of ice on previously cleared surfaces.

(3) When rapid frosting occurs after initial removal, apply a coat of defrosting fluid to retard accumulation of frost before taxiing. Also apply a coat of defrosting fluid after the last flight of the day to help retard further accumulation of ice, snow, or frost.

(4) Inspect control surfaces for freedom of operation. Sudden temperature drops will cause ice to form on the inside of the surfaces as well as on the outside. When evident that ice has formed on the inside restricting control surface movement, remove by application of heat.

(5) Inspect windows and windshields for cracks. To prevent cracking, open all windows before removing aircraft from heated hanger.

(6) Inspect fuel and oil tank caps and vents and crank-case breathers for presence of ice, snow, or frozen condensate. Plugged lines or vents can cause collapsing fuel tanks and swelling of oil tanks.

(7) Inspect wing and fuselage drains and vents for ice and snow. Thaw clogged drains or vents.

(8) Inspect fuel and oil tank sumps for ice. Where water condensate has frozen, heat to permit drainage.

(9) Inspect hydraulic reservoirs for evidence of freezing. If evident, apply heat to thaw.

(10) Inspect cylinder struts and hydraulic pistons for accumulation of dirt and ice. Ice and grit which will damage cylinder strut packings shall be removed. Pistons shall be wiped with a clean cloth saturated in hydraulic fluid, MIL-H-5606.

(11) Using an auxiliary power source, check radios and electrically operated controls and equipment for proper operation.

(12) Inspect exposed limit switches and microswitches for presence of Ice or snow and for proper operation.

(13) Inspect hydraulic accumulators, landing gear struts, and tires for proper inflation. Air pressures will drop due to a temperature drop.

NOTE

Exposure of aircraft to low temperatures will cause contraction of metals and hardening of rubber seals. Frequent inspections for leakage and looseness of connections is necessary to prevent leakage.

d. *Anti-Icing, Deicing, and Defrosting*. A protective coating of unheated, undiluted, anti-icing and deicing-defrosting fluid will prevent frozen accumulations from forming on aircraft surfaces if applied before freezing conditions begin and as often as necessary during the precipitation. Any frost or thin layer of ice that does form can be removed easily by application of additional fluid. A protective coating of fluid applied before installation of covers will permit easy removal with a minimum sticking of covers.

WARNING

When handling and applying glycol-water products, wear eye, hand, and body protection. Avoid Inhaling vapors and skin contact. Follow Material Safety Data Sheet procedures for individual product use Injury may otherwise result.

(1) *Types of fluid* Anti-icing, deicing, and defrosting fluid characteristics are explained in the following paragraphs.

(a) *Ethylene/propylene glycol.* Anti-icing and deicing-defrosting fluid, specification MIL-A-8243B, is basically a mixture of ethylene glycol and propylene glycol and Is recommended for preventing formation and removing deposits of frost, ice, and snow on exterior aircraft surfaces on the ground in temperatures ranging from -65 to 32 °F (-54 to 0 °C). Ethylene glycol and propylene glycol are formulated with intrinsic corrosion Inhibitor, as prescribed In MIL-A-8243B.

(b) *Glycol-water.* Glycol-water anti-icing and deicing-defrosting fluids, including MIL-A-8243 anti-Icing fluid, are not recommended for use around aircraft electronic equipment which employs silver or silver coated electrical/electronic circuitry.

WARNING

Rapid oxidation and fire can occur when glyco-water solutions come in contact with a short across bare or defective insulated silver or silver-coated electrical circuits such as wiring, switches, and circuit breakers which carry positive direct current (dc), such as electronic black boxes.

NOTE

The fluid shall be homogenous and free of sediment and abrasive. A slight waxy separation in the fluid shall be no cause for rejection if the separation is dispersable by several seconds of moderate agitation Fluid shall remain dispersed for at least 24 hours.

(2) *Fluid application* . The following paragraphs describe methods and equipment used to apply antiicing, deicing, and defrosting fluids.

WARNING

Special care must be taken by personnel to prevent slipping and falling when walking on wing surfaces coated with deicing fluid. Otherwise death or injury may result.

(a) *Spray method.* If hangars, covers, or equipment for heating fluid-water solutions are unavailable, the preventive spray method will be used to maintain standby and alert aircraft in a state of readiness. The preventive spray method Is application of cold, undiluted fluid on surface to be protected in a quantity to wet the area thoroughly without excessive drainage

(b) *Spray pattern* . Suitable spray equipment should be used, as application of fluid is done best by spraying surfaces. Spray should not be applied in a solid stream, but be fine enough to prevent waste. A fanshaped pattern is recommended

(c) *Spray equipment*. Cleaning or other decontaminating equipment may be modified to spray deicing fluids. Spray guns on this equipment can be used as they are, but better spray coverage can be obtained if they are modified slightly. A common garden hose nozzle will give satisfactory result In accumulation removal if the solid stream is used. This nozzle also can be used to apply a protective coating of fluid if a fine conical spray is used.

(d) *Spray nozzles*. The three nozzles shown in figure 10-1 may be fabricated in any base shop and used with equipment in the preceding paragraph (c) with good results. Each is explained in the following paragraphs.

1 *Bent tube nozzle.* The bent tube nozzle is made by drilling approximately 60 holes along the longitudinal axis through one side of an aluminum, brass, or steel tube. Holes are 0.043-inch diameter. Tube is capped and bent in a tube bender to give about a 90-degree fan spray.

2 *Pipe nipple nozzle* . The pipe nipple nozzle consists of a one-inch pipe nipple with 0.0512-inch holes drilled radially around 90 degrees from outer edge.

3 *Pipe cap nozzle*. The pipe cap nozzle is hardest to fabricate. It consists of a 3/4 or one-inch pipe cap with 0.0312-inch drilled holes in center and 0.0469-inch drilled holes toward edges, all radiating from a point In base of cap.

(e) Aftemate application method. Cold deicing fluid may be applied with a mop, broom, or soft bristle brush if spray equipment is unavailable.

(f) Support equipment. Use of maintenance stands and work platforms is recommended to position personnel safely near wing and tail surfaces during application of fluid.

e. P*revention and Removal of Snow, Ice, and Frost Deposits* . The following paragraphs contain methods for the prevention and removal of snow, ice, and frost deposits.

(1) Prevention of deposits. The following paragraphs explain the prevention of snow, ice, and frost deposits.

(a) *Snow deposit prevention*. If snow is expected, wing and tail covers should be used. Deicing fluid should not be used for protective coating if snow is predicted, except in conjunction with installation of covers. If attempts are made to use the fluid to prevent snow accumulation, a frozen deposit will be encountered which is difficult to remove. The fluid is diluted by the melting snow to form a slush which freezes in place. Use of covers after coating aircraft surfaces with fluid will prevent snow from forming directly on aircraft and permit easy removal of covers. If covers are unavailable, the best method of preventing heavy snow accumulation is constant removal by brushing or sweeping during the snowfall.

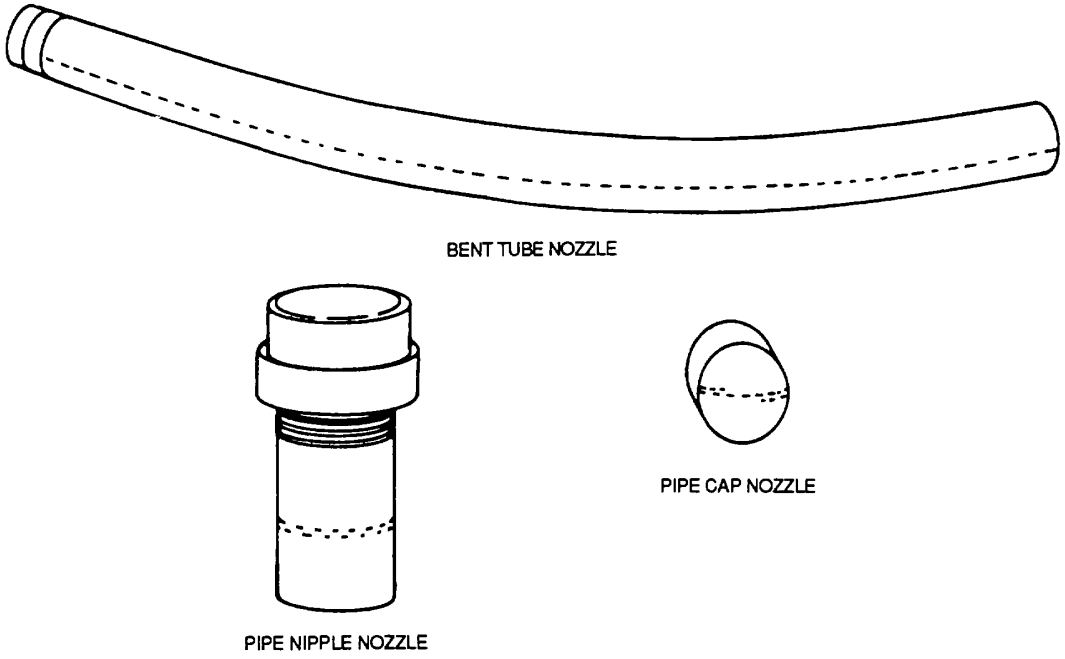

Figure 10-1. Types of Spray Nozzles

(b) *Ice deposit prevention*. Deicing fluid will protect aircraft surfaces as long as it remains on the surfaces. However, freezing rain will tend to wash surfaces clean of fluid, as well as dilute the fluid to the point at which ice will form. The amount of protection afforded by the fluid depends on the amount of freezing rain. The following steps should be taken if ice caused by freezing rain is expected.

1 On aircraft for which covers are available, a coating of fluid applied before covers are installed will prevent covers from freezing on aircraft surfaces and make removal of covers much easier. However, care should be taken to ensure that only a minimum amount of rain is allowed to blow under covers Otherwise, dilution of fluid will allow freezing to occur.

2 On larger aircraft for which covers are unavailable, the best method of prevention is to keep the surfaces wet with fluid. As long as this fluid remains on the surface, protection is afforded. Since rain eventually will dilute the fluid and render it ineffective for preventing ice formation, protection must be maintained during precipitation by continual spraying of fluid. If weather conditions are such that It is impossible to prevent ice formation, removal should be accomplished.

(c) Frost deposit prevention. A satisfactory procedure for protection of aircraft from frost is the application of a layer of unheated, undiluted, de-icing fluid to aircraft surfaces after the last flight of the day or as close to midnight as possible, whichever is later. This should permit early morning departure without further fluid application. The length of time that an aircraft will be protected by a single coat of fluid depends on the climatic conditions.

(2) Removal of deposits. The following paragraphs explain the removal of snow, ice, and frost deposits.

CAUTION

Extreme care shall be taken to prevent damage to aircraft. Sharp instruments, such as picks, knives, or screwdrivers, will not be used to loosen ice formation.

(a) Snow removal. Deicing fluids should not be used to remove heavy snow accumulation. Snow absorbs wasteful amounts of fluid to form a slush which is difficult to remove and eventually will refreeze. The slush will get into control surface hinges and freeze, causing additional difficulty. Snow will be removed by brushing or sweeping or by moving the covers. Usually after snow removal, a layer of rough ice remains. This frozen crust can be removed with hot, diluted, deicing fluid. In an emergency when aircraft must get off ground as quickly as possible, thin layers of snow can be removed with hot, diluted, deicing fluid. If sufficient fluid is used, the combination of heat from fluid and force of the stream will permit removal of slush, as it Is formed without refreezing. Quantity of heated fluid required for snow removal Is prohibitive. Remove snow, water and Ice from aircraft fuel filler cap wells before removing fuel filler cap. Only one filler cap should be removed at a time, and it should be replaced immediately after servicing is completed.

(b) *Ice and frost removal*. If hangars and covers cannot be used to prevent frozen formations on aircraft, but equipment is available for heating fluidwater solutions, removal of frozen formations by hot, diluted, deicing fluid will be used in place of preventive spraying. Accumulations should be allowed to form and then be removed just after each precipitation or just before each flight, whichever is most practicable or compatible with operational mission of the aircraft.

f. Preventive Maintenance. Accomplish the following preventive maintenance procedures.

(1) Avoid parking aircraft in wet or slushy areas.

(2) Use caution when towing aircraft In extremely low temperatures to prevent damage to hydraulic seals which would result In strut leakage.

(3) Inspect oil and fuel drains and crankcase breathers for ice and frost Remove any existing frost or ice.

(4) If layovers are to be over 4 hours and temperature is below -20°F (-290°C), remove battery and store in a warm place.

(5) Drain oil system when there is no provision available for preheating oil and a long layover period is anticipated.

(6) When temperature rises above freezing during a long layover, drain fuel and oil tank sumps of water before temperature drops.

(7) Install protective covers and shields to protect aircraft from accumulation of snow, frost, or ice.

(8) Partly open canopy when parking aircraft for the night, or provide some other opening to prevent accumulation of frost on windows.

(9) Clean dirt, ice, and grit from landing gear struts and hydraulic pistons. Wipe struts with a clean cloth saturated in hydraulic fluid, MIL-H-5606. Inspect struts for proper inflation.

(10) Inspect tires for proper Inflation.

(11) Install or remove snow and ice-grip tires to comply with change of seasons. Use of snow and ice grip tires on clear, hard surfaced runways reduces the life and effectiveness of the tires.

(12 In emergency arctic conditions, tie down aircraft using trees or the arctic-type mooring anchor shown in figure 10-2. The following procedures can be used to construct an arctic-type mooring.

(a) Thaw ground with fire where pit is to be dug.

CAUTION

During thawing operation, no aircraft will be parked within a 100-foot radius of operation. Damage to equipment may otherwise result.

(b) Dig pit a minimum of 3 feet deep and wide enough to accommodate a 3-foot length of log or similar object.

(c) Connect rope, insert log or similar object and fill pit with gravel and snow.

10-3. Desert Maintenance . The following paragraphs contain the basic principles and procedures which are essential for efficient utilization of aircraft, equipment, and personnel in desert areas. In the desert, aircraft can be protected from deterioration problems by using protective covers, preventive maintenance, and maintaining regular inspections. These paragraphs are not considered as a substitute for detailed maintenance and operating instructions, but as a supplement to each aircraft operation and maintenance manual.

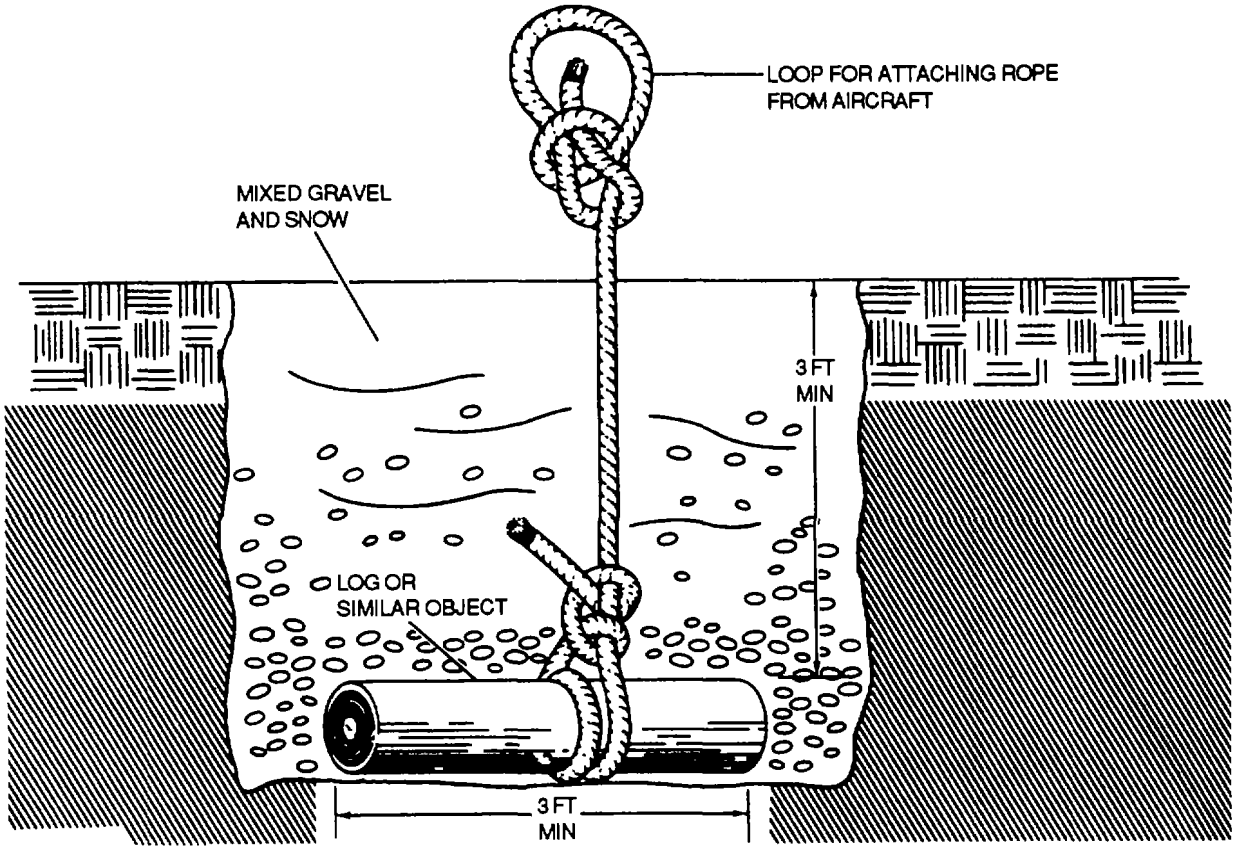

Figure 10-2. Arctic-type Mooring

a. Deterioration Factors. Deterioration problems result from sand and dust, high day temperatures, temperature fluctuations, ultraviolet radiation, and terrain. Considerations for each problem are explained in the following paragraphs.

(1) Sand and dust. The large quanti ties of loose sand and dust create serious erosion problems for rotor blades, propellers, turbine engine compressors, windshields and other exposed surfaces of the aircraft While sitting on the ground, the aircraft is exposed to blowing sand and dust from frequent desert windstorms and sand and dust clouds created by vehicular traffic and operation of other aircraft nearby. Sand and dust particles collect on all surfaces of the aircraft and will penetrate almost any crack or crevice to accumulate Inside the aircraft. Electronic gear and optical equipment are very susceptible to sand and dust. Weapons are particularly susceptible since many parts are often covered with a light coat of lubricant.

(2) High day temperature. In the desert, heat creates serious problems for people and equipment. The temperature inside a parked aircraft which has been closed up to keep the sand and dust out can reach temperatures much higher than outside temperatures Extreme heat can cause the failsafe device in electronic gear to shut the equipment off. High temperatures can cause lubricants to break down, distort seals and gaskets, and result in Increased leaking problems. Other problems due to high temperatures include softening of plastics, high stress on pressurized containers, and shortened battery life.

(3) Temperature fluctuations Daytime temperatures can reach over 100 °F (38 °C), while night time temperatures could reach freezing (or close to it) The condensation resulting from this extreme temperature variation contributes to increased corrosion.

(4) Ultraviolet radiation. The abundant desert sunlight produces a high level of ultraviolet radiation which can cause unprotected plastic components to become very brittle and easily cracked Ultraviolet radiation also accelerates deterioration of nylon webbing used in seats and restraint systems.

(5) Terrain. The terrain causes problems with moving aircraft and associated support equipment on the ground Sand can bog a vehicle or aircraft down to the axles. A condition known as Cap Rock Is often encountered The terrain appears rocky, however, the substrate will not support weight and a vehicle can sink up to the frame when attempting to travel over Cap Rock. Aircraft tires can easily be damaged In rocky desert terrain.

b. Precautions. Maintenance personnel will observe the following precautions as a guide to successful performance of duty under desert conditions:

WARNING

Severe burns can result when bare skin touches metal parts of aircraft or equipment.

- Exercise caution when touching aircraft surfaces or metal tools that have been exposed to the sun. Wear gloves and use mats or pad, when practical, to prevent burns or blisters.

- Use extreme care when handling engine fuel at temperatures above 120°F (49°C), to prevent possible sparks and explosion. Open gasoline drums with bronze or other nonsparking tools.

- Electronic gear and optics must be shielded from direct sunlight and/or otherwise cooled for efficient operation.

c. Inspection and Maintenance . The following procedures are for the inspection and maintenance of aircraft operating in desert conditions:

NOTE

Aircraft should be cleaned daily Frequent use of a vacuum cleaner will prevent accumulation of sand and dust in aircraft. Pay particular attention to abrasion/erosion problems during Inspections.

(1) Inspect bungee cords, seals, tires, etc., frequently for blisters and other signs of deterioration.

(2) Inspect vibration Isolators every two weeks and replace where cracking or permanent set is excessive.

(3) Keep a chart showing engine oil consumption. A sharp rise on the chart will indicate faulty or inefficient engine operation. An inefficient engine should not be continually operated. It is better to correct the trouble so the engine will operate at peak performance.

(4) Inspect, clean, or replace filters at regular intervals. Sand and dust quickly choke fuel and oil filters and air cleaners. Keep an adequate reserve stock of cleaners and filters.

(5) Keep parachute pack flaps sealed and covered when not in use. Seals must be removed before takeoff.

(6) Inspect and clean flags, control hinges pulleys, bearings, worm gears, cowl slides, landing gear, and tail wheel assemblies regularly to arrest corrosive action.

(7) Inspect aircraft regularly for adequate lubrication, leakage, contaminated hydraulic fluid, specific cable tension, and condition of materials, such as rubber and hydraulic equipment. Excess lubricant must be wiped off all exposed bearing surfaces, joints, fittings, components, and fuselage.

(8) Carefully smooth pitted propellers (if not beyond permissible limits) with a fine file and emery cloth. Remove all rough burrs and ragged edges around pits at frequent intervals.

(9) Inspect dead air spaces in wings, fuselage, and tail group at regular intervals for accumulation of sand. Remove accumulated sand to prevent a weight and balance change of aircraft.

(10) Clean engines, where possible, with a highpressure spray gun filled with appropriate cleaning fluid.

(11) Clean instrument filters thoroughly at regular intervals. Replace wornout filters promptly.

(12) Clean oil and gasoline tanks periodically, as sand accumulates in corners, seams, and bottom of tanks.

(13) Clean metal parts not In use carefully, cover with grease, and either wrap or store away from sand and dust.

(14) Clean Plexiglas surfaces with clean water. Do not rub Plexiglas surfaces during cleaning nor use Plexiglas cleaning kit.

d. Preventive Maintenance . Accomplish the following preventive maintenance procedures:

(1) Protect aircraft from excessive surface temperatures by covering with canvas or native matting. Use protective covers as soon as possible prior to operation. Covers over Plexiglas should be installed so that they do not touch the surface of the glass. Barrier material may be installed for this purpose.

NOTE

Ensure that all weather stripping on doors, panels, covers, etc, is serviceable and that these items are adjusted to make proper contact with sealing surface.

(2) Leave canopy partly open, except during dust or rain storms, to permit circulation of air within the flight compartment.

NOTE

Ensure that sealant Installed around windows, seams, chin bubbles, and sheet metal repairs is serviceable.

(3) Install protective covers and dust excluder plugs on all engine openings, vents, air intakes, exhaust outlets, breathers, propeller hubs and feathering domes, cowls, and other vital openings to prevent entry of sand and dust. Keep aircraft pointed into wind when not being serviced or prepared for flight.

(4) Run up engine on a hard surface, as shown In figure 10-3, such as a landing mat, or sand and dust-free area, to prevent sand blasting, rotor blade, propeller, fuselage, and tail surfaces. Landing/taxi area should be located as far as possible from maintenance area and allow as much space between aircraft as tactically feasible.

(5) Never taxi aircraft under its own power unless necessary. This will aid preventing pitting of the rotor blade, propeller, fuselage, and tail surfaces Tow aircraft, using proper tow fittings. Do not move aircraft over desert crust or hardpan any more than necessary.

(6) Keep pitot heads and gyro Instrument venturi covered when not in use.

(7) Make all possible ground checks before starting engine. Inspect controls for freedom of movement to ensure no binding is caused by sand.

(8) Do not run up aircraft in such a manner as to damage other aircraft or injure personnel by blown sand. Engine should never be run on ground longer than necessary. Use ground guides to prevent landing gear from resting on sharp rocks while parking aircraft.

(9) Do all shop (bench) repairs in enclosed shelter. Never use sand-encrusted tools on aircraft.

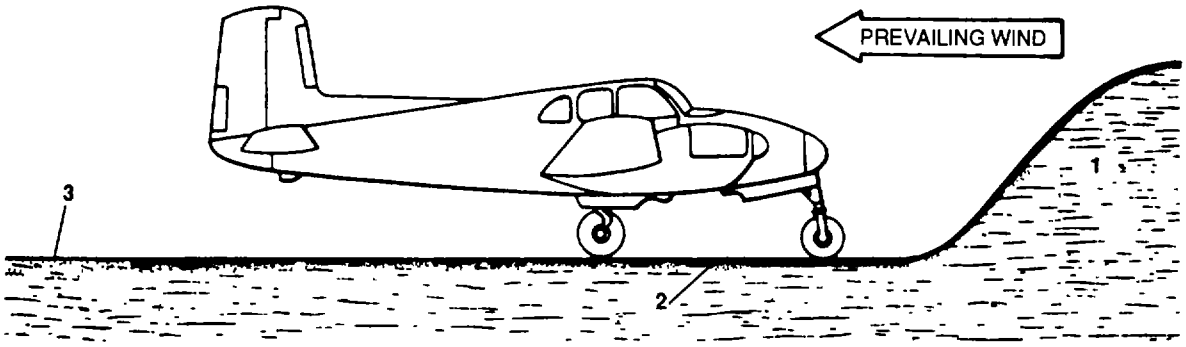

CROSS SECTION OF A GOOD NATURAL HARD STANDING

LEGEND

1 CRUST RISING INTO UP-WIND PROTECTIVE TOPOGRAPHICAL FEATURE
2 TIGHTLY PACKED HARD SAND CRUST
3 AREA OF LOOSE SAND, WELL DOWN-WIND OF HARD STANDING AREA

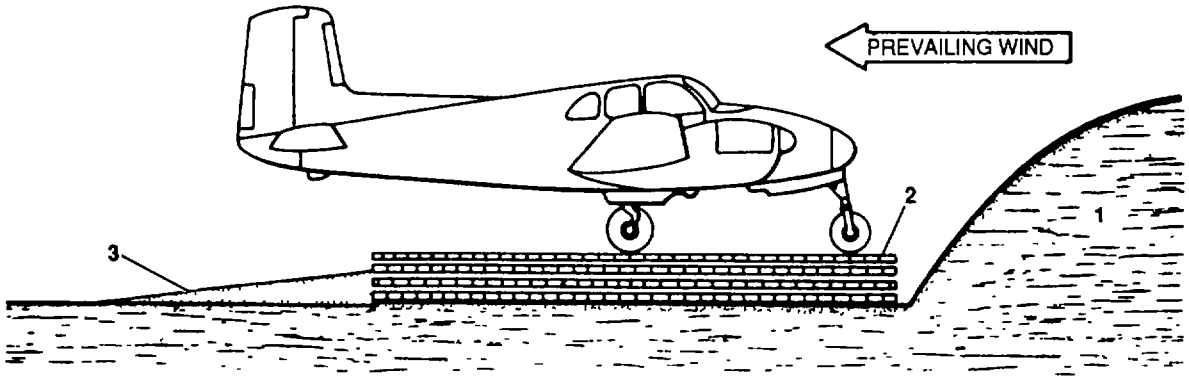

LEGEND

1 DESERT CRUST RISING TO PROTECTIVE TOPOGRAPHICAL FEATURE
2 STACK OF STEEL LANDING MATS
3 AREA OF LOOSE SAND

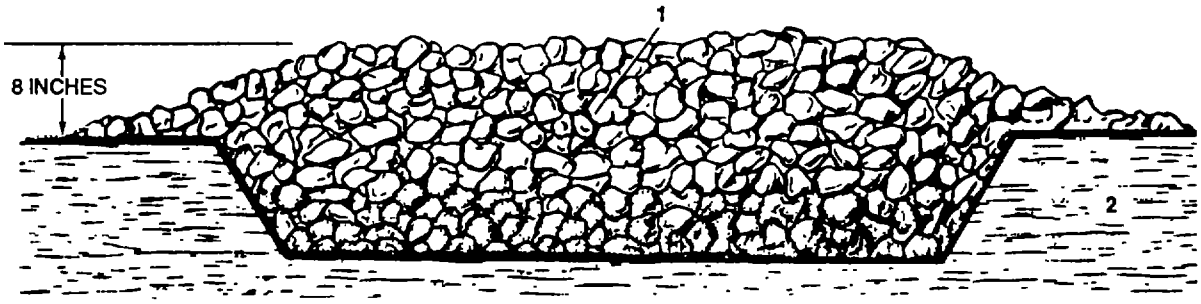

LEGEND

1 PIT FILLED WITH ROCK ROCK EXTENDING ABOUT 8 INCHES ABOVE DESERT SURFACE

2 PIT WILL ALLOW SAND TO FILTER DOWN THROUGH ROCKS AND OUT OF REACH OF ENGINE BLAST ROCK MUST BE TAKEN OUT AND PIT CLEANED OF ACCUMULATED SAND AT INTERVALS

Figure 10-3. Construction of Hard Stands

(10) When possible, accomplish repairs and servicing during early morning hours, or in late afternoon, evening, and night, when heat is less intense. Desert camouflage netting can be used for shade.

(11) Ground aircraft, funnel, and fuel nozzle during refueling operation. Accomplish filling of gasoline from cans, using a filter funnel that fits snugly into tank opening Exercise every precaution to exclude sand from gasoline and oil during servicing operations.

(12) Where possible, service oil system directly from can to oil tank, without using an intermediate measuring can.

(13) Keep lubricants and gasoline drums covered, and where possible, maintain storage temperature below 120°F (49°C).

(14) Use polarized sunglasses during sunlight hours.

(15) Use eye protection in blowing sand/dust. Extra measures should be used to secure aircraft and shelter.

(16) Ensure voltage regulators are properly set during all temperature changes.

(17) Tape all opening or seams around windows, chin bubbles, seldom used access panels, etc, being sure not to Inhibit or restrict airflow required for cooling, or increase Infrared (IR) signature. An entry is required on DA Form 2408-13 in the aircraft log book after tape has been Installed. Use tape MIL-T-21595 Type I.

10-4. Tropic Maintenance. The following paragraphs contain basic principles and procedures essential for efficient utilization of aircraft equipment and personnel in tropic areas. Factors having deteriorating influence on fabrics in tropic areas can be categorized as high humidity, high temperatures, salt-laden air, and sunshine. These factors create corrosion, rot, mildew, and mold Preventing these deteriorating effects to ensure safety and proper operation requires constant, regular Inspections and preventive maintenance measures This paragraph is not to be considered as a substitute for detailed maintenance and operating instruction, but as a supplement to each aircraft operation and maintenance manual.

a. I nspection and Preventive Maintenance . Proper cleaning, packaging, and storing ensures longer life and serviceability of aircraft and equipment. The following practices should be used as a guide:

(1) Treat corrosion-affected area.

(2) Prevent rot, mildew, and mold by keeping fabrics, rubber, and other susceptible items as dry as possible. Clean fabrics in aircraft daily. The effects of moisture and fungus on fabrics are listed in table 10-1.

(3) Operate all heat-producing electrical equipment daily to remove moisture. When this procedure is not practical, dry equipment using a ground heater or by placing in sun.

(4) Wash aircraft often, and lubricate moving parts when aircraft is exposed to salt-laden air or mud.

CAUTION

Before drilling holes, ensure that the aircraft will not be weakened structurally and the operating characteristics will not be adversely affected. Damage may otherwise result.

(5) Keep all drain holes clear of obstructions, and drill holes where necessary in wings, fuselage, enclosed equipment, etc., (when approved by the maintenance officer), to facilitate draining where a noticeable accumulation of water Is observed.

(6) Leave canopy windows or doors open when aircraft is parked In sun to permit air circulation within flight compartment Protect windshields and windows from sun by covering with canvas.

(7) Blow out brakes frequently with compressed air when operating from muddy or dusty fields to prevent damage to brake disks.

(8) To prevent rust, wipe control cables daily with an oily rag.

(9) Check battery every third day to maintain proper electrolyte level.

(10) Every 25 hours, dip paper air filter cartridges in leaded gasoline and dry thoroughly.

(11) Drain all fuel traps and strainers immediately prior to flight.

(12) While aircraft is on ground, avoid excessive water in fuel systems by keeping fuel tanks completely filled.

Table 10-1. Part and Fabrics Affected by Moisture and Fungi

Part or fabric	Effects of moisture and fungi
Cotton, Linen, Paper, and Cellulose Derivatives: Insulation, coverings, webbing, belting, laminations, dielectrics, etc.	Insulating and dielectric properties are lost or impaired by moisture, causing arcing, flash-overs and cross talk. Fungi causes rot and complete destruction.
Fiber: Terminal strips and insulators.	Moisture causes electrical leakage paths to form, in turn, causing flash-overs, cross talk, and loss of insulating properties Fiber terminal strips and insulators are destroyed by fungi.
Fiber: Washers, supports, etc.	Moisture causes swelling which, in turn, causes supports to misalign, resulting in binding of supported parts Washers are destroyed by fungi.
Glass Lenses, windows, etc.	Fungi grow on organic dust, insect tracks, insect feces, dead insects, etc. Dead mites and fungus growth on glass obscures visibility and corrodes nearby metal parts.
Laminated Plastics: Terminal strips and boards, switchboard panels, etc, tube sockets and coil . forms, and connectors	Moisture causes electrical leakage paths to form, in turn, causing flash-overs, cross talk, and loss of insulating properties Delamination occurs and fungi grow on surfaces and around edges Extreme temperature changes cause expansion and contraction.
Leathers Straps, cases, gaskets, etc.	Fungus destroys tanning and protective materials, causing rotting due to moisture bacteria fungi.
Metals	High temperature and moisture vapor cause rapid corrosion Fungus and bacterial growth produce acids and other products which speed corrosion, etching of surfaces, and oxidation This interferes with the operation of moving parts, screws, etc. and causes dust between terminals, capacitor plates, air condensers, etc, thus causing noise, loss in sensitivity, and arc-overs.
Metals Two or more.	Different metals which have different potentials when moisture is present cause electrolysis, thus causing formation of salts and beep etching of surfaces as one metal is plated onto the other This happens at riveted and bolted joints, bearings, slides, and screw threads.

Table 10-1. Parts and Fabrics Affected by Moisture and Fungi - CONT

Part or fabric	Effects of moisture and fungi
Molded Plastics: Terminal strips and boards, switchboard panels, connectors, etc., and tube sockets and coil forms.	Machined, sawed, or ground edges or surfaces are supporters of fungi, causing shorts and flash-overs. Fungus growth reduces resistance between parts mounted on plastic to such an extent that the item Is useless.
Soldered joints	Excessive soldering flux on terminal boards holds moisture, which speeds up corrosion and growth of fungi Soldering irons should not come in contact with wire insulation.
Wax: For impregnation	Fungus-inhibiting waxes which are not clean support fungi, thus causing destruction of insulating and protective qualities and permitting entrance of moisture which destroys parts and unbalances electrical circuit.
Wood: Cases, houses and housings, plastics fillers, masts, etc.	Moisture and fungi cause dry rot, swelling, and delamination.

(13) Run up reciprocating engines at least once every third day.

(14) Operate gas turbine engines at least once every seven days for approximately 10 minutes at flight idle.

(15) Inspect webbing for wear and fungi.

(16) Inspect canvas or duct covers for wear, torn seams, stains, fungi, etc.

b. Parts and Fabrics Affected by Moisture and Fungi. Parts and fabrics affected by moisture and fungi are shown In table 10-1.

CHAPTER 11
AVIATION LIFE SUPPORT EQUIPMENT MAINTENANCE

11-1. General. Organizing Aviation Life Support Equipment (ALSE) servicing facilities is based on many factors, such as the number of aircrew members assigned, and the type and quantity of equipment. With this in mind, the ALSE maintenance shop should be tailored to the needs of the aviation unit, activity or facility. The minimum standards for the ALSE facility and equip ment contained in this Technical Manual (TM) are not mandatory requirements, but are standards which can be used for planning purposes. Local Commanders are authorized to deviate from these standards whenever circumstances cannot be reasonably obtained. It will be the responsibility of the local Commander to be certain that any deviation permitted will not foster unsafe or unsanitary practices, recognizing that ALSE has specific areas of supporting the user in hostile conditions i.e., high altitude, in water, land survival, etc. This equipment must perform to standards the first time upon being activated for use. These standards will not be compromised.

11-2. Administration. Administration of the unit Life Support Program must have the Commander's approval. The unit Training Officer must provide scheduling time and training for ALSE. Included should be Code of Conduct/Survival, Evasion, Resistance, and Escape (SERE) Training in accordance with AR 350-30. The unit Aviation ALSE Officer must not only supervise the ALSE technician's work, but also the training of the unit aircrew personnel in the care and use of ALSE, and survival training. The ALSE technician will inspect, repair/replace, and service the equipment in accordance with the applicable Technical Manuals (TMs), Technical Orders (TOs), and Naval Air Manuals (NAVAIRs), and maintain the required forms and records as well as supervise the ALSE training performed by aircrew personnel.

11-3. Safety. The ALSE maintenance area will comply with all Army safety regulations and unit Standing Operation Procedures (SOP). The area will have all regulatory signs i.e., NO SMOKING, EXIT, OXYGEN, etc., conspicuously posted. Horseplay will not be tolerated or permitted in the area at any time. Personal safety equipment will be used while working/servicing ALSE i.e., goggles, face shield, apron, gloves, etc. Fire extinguishers will be located as needed by type and weight. It is recommended an extinguisher be located in each of the work, storage, and administrative areas.

11-4. Personnel. Maintenance of ALSE will be performed only by school-trained, qualified personnel, either military or civilian personnel trained in accordance with paragraph 11-19 may inspect first aid kit. General purpose, panel mounted, NSN 6545-00-919-6650, for aircraft. Also maintenance personnel must be graduates of the U.S. Army 600-ASIQ2, U.S. Air Force C3AABR92230-000, U.S. Navy LSE C-602-2010, or other courses of instruction approved by U.S. Army Aviation Logistics School (USAALS), Ft. Eustis, VA. USAALS has responsibility for training ALSE maintenance personnel. Refresher courses do not qualify personnel to service ALSE.

11-5. Publications. ALSE consists of equipment unique to aviation needs while flying or in a survival condition. This equipment covers several Federal Supply classifications i.e., Clothing 8415, Flotation Equipment 4220, Aircraft Air-Conditioning, Heating and Pressurizing 1660, etc. Each stock classification is initially assigned to a command to manage i.e., stock classification 1660 is assigned to the Air Force Logistics Command while 4220 is assigned to Naval Sea Systems Command. Army Technical Manuals are assigned numbers by basic series and stock classification i.e., (TM 55-1600, 55 signifies transportation while 1660 signifies aircraft air-conditioning and pressurizing equipment). Because the management responsibility is fragmented between many managers, which includes engineering and maintenance, all ALSE items cannot be combined into a single TM. The following paragraphs will described the ALSE items and then reference the repair manuals for that item.

11-6. Administration Area. The ALSE administration area should have a desk and chair, bookcase file cabinet, and enough chairs for the efficient use of the area. A library containing the necessary Army Regulations (ARs) and the applicable TMs, TOs, and NAVAIRs for the ALSE being used by the unit/units being serviced. Included should be a microfiche viewer with current maintenance and publications fiche. A supply of ALSE maintenance forms will be maintained and used in accordance with DA PAM 738-751. Visual boards relating to ALSE maintenance scheduling shall be located near the desk of the individual assigned to that particular equipment for quick reference, (Refer to FM 1-508). Loitering of personnel in the ALSE area will not be permitted. Loitering fosters horseplay and other unsafe actions by personnel.

11-7. Maintenance Area. The ALSE maintenance area consists of work, storage, and fitting areas. Access to a classroom adjacent to or in close proximity of the life support area is desired for lectures and instructions on the equipment being used and survival conditions. The shop should contain not less than 1,000 square feet of usable area that is environmentally controlled within a range of +60°F (15.6°C) to 75°F (23.8°C) and have a potable water source i.e., hot and cold water. The area will be protected from pilferage, dampness, fire, dust, insects, rodents, direct sunlight, and be free from uncontrolled foot and vehicle traffic. To ensure that all ALSE is maintained in a high state of readiness through inspecting, cleaning, fitting, testing, adjusting, and repairing, all maintenance will be in accordance with the applicable TM, TO, or NAVAIR. For additional information refer to FM 1-508. Table 11-1 lists recommended test equipment for the ALSE work area.

11-8. Work Area Criteria. The work area will have bench surfaces free from rough or abrasive materials, splinter-free tops with a nonporous surface. The area is to be well-lighted with accessible electrical outlets to all bench and desk areas. Cabinets and work benches/ tables with locks should be used for securing test equipment, tools, and supplies. Units that have oxygen equipment will have an area set aside for oxygen maintenance that will have hot and cold running water, stainless steel sinks, and floors that are sealed and protected from spills. The area will be restricted to ALSE personnel only. Units supporting flotation equipment will have a moisture and oil-free source of low-pressure, high-volume air and a vacuum source. A vacuum cleaner may be used; however, the vacuum cleaner must not be used for cleaning at any time, because dirt and dust must not be induced into the flotation cells. The floor of the work shop will be sealed and coated to prevent chemical spills from penetrating the floor surface. The work area will have hot and cold running water for cleaning equipment as well as a wash area. Cleanliness is very important in maintaining the equipment. Smoking, eating or drinking should not be permitted in the area.

11-9. Storage Area Criteria. The storage area will be well-ventilated, out of direct sunlight, and well-lighted. The storage area will have storage shelves and cabinets that provide security for the stored equipment and be free from dust, moisture, fire, insects, and rodents. The floor is to be sealed and covered with a dust-free flooring material. A refrigerator will be used to store batteries used in life support equipment; because of health and food service regulations, food will not be stored in refrigerators.

11-10. Fitting Area Criteria. The fitting area will be well-lighted and have enough space so personnel may be fitted with clothing and equipment being assigned to them, i.e. survival vest, flight clothing, flight helmet, parachute harness, etc.

11-11. Tools and Special Repair Equipment. All ALSE items will be serviced and repaired in accordance with applicable TM/TO. The required and authorized tools and special repair equipment are found in the Repair Parts and Special Tools List (RPSTL) of the applicable TWO.

11-12. Training Equipment. Most equipment used for training can be returned to service, providing the equipment is serviceable and can pass all inspection criteria for that item, before it is returned to service. The exceptions are as follows:

- All flotation equipment - these are to be marked FOR TRAINING ONLY in accordance with TM 5-4220-202-14.
- Sleeping bags - either those packed inside a 12" by 12" by 1" hard fiberglass container or the new vacuum packed soft plastic package.
- DELETED

11-13. Temporary Storage of Life Support Equipment. Equipment being stored is subject to dry rot, rodent damage, mildew and other contamination. It is important for the area to be environmentally controlled as well as secured from pilferage.

a. Survival Kits. Survival kits to be in temporary storage will:

- Be inspected, repaired, and if needed, cleaned.
- Have components replaced if necessary.
- Have matches and pyrotechnics removed and stored in accordance with post policy for units operating within a military base, or local policy for those units not operating on a military base.
- Have kits appropriately tagged with annotations about items not in the kit being stored.

Table 11-1. Test Equipment

Nomenclature	NSN
Multimeter, AN/PSM-45	6625-01-139-2512
Test set, AN/PRM-32A	6625-01-013-9900
Test set, AN/R/TS-24	6625-01-128-8588
Test set, strobe	6625-01-085-9669
Test set, TS-2530A/UR	6625-00-238-0223
For flotation equipment	
Cleaner, vacuum (not for cleaning purposes)	7910-00-550-9123
C02 Transfer unit	3655-00-288-0309
Manometer	6685-00-526-5323
Scale, dial and beam	6670-00-255-0239
Separator, oil and water	4920-00-242-4100
For oxygen equipment	
Parts kit, oxygen mask repair	1660-00-672-3945
Regulator	1660-00-700-9776
Tester, oxygen mask, MQ-1A	1660-01-097-0441
Tester, oxygen regulator	4920-00-128-8584

NOTE

Storage cabinets or workbenches/tables with storage shelves/drawers that can be secured with locks should be used for securing test equipment, tools, equipment, and supplies The storage cabinets, workbenches/tables will be marked to identify the tools, equipment, supplies and test equipment contained within them.

- Be stored on shelved well-ventilated and out of direct sunlight.

b Survival Vests . Survival vests to be put In temporary storage will:

- Be inspected, repaired, and if needed, cleaned.
- Have components replaced if necessary
- Have signal kits, personnel distress removed and stored in accordance with post policy if unit is operating from a military base, or local policy if unit is operating off a military base.
- Have radios removed from vest. Battery will be removed from the radio and put into refrigerated storage.
- Have the light marker distress removed from the vest and the battery from the light marker removed and put Into refrigerated storage.
- Have vest appropriately tagged and Items not In vest annotated on the tag. The vest will be hung on a hanger for storage, out of direct sunlight.

c. Flotation Equipment. Flotation equipment to be put into storage will be stored in accordance with TM 5-4220-202-1 4/T.O.14S-1-102.

d Pyrotechnics. Pyrotechnics will be stored in accordance with post policy, if unit is operating on a military post, or in accordance with local policy if unit operates off a military base.

e. Oxygen Equipment. Oxygen equipment to be put into storage in accordance with TM 55-1660-24513/TO 15X-1-1.

f. New Equipment. All newly assigned ALSE equipment prior to storage will be inspected upon receipt from supply/individual turn-in, and prior to issue/reissue, and then in accordance with TM 55-1680-317-23&P or the applicable TM/TO for that piece of equipment.

11-14. Flight Clothing. Flight clothing consists of flight coveralls, nomex flight jackets, nomex or leather flight gloves, anti-exposure suits, flight helmet, and aircrew body armor. Nylon flight jackets are no longer authorized for flight duty use.

a. Inspection. Inspection of flight clothing, anti-exposure suits, flight helmet, and aircrew body armor will be in accordance with the applicable TM, TO, or NAVAIR.

b. Repair. Repair will be In accordance with TM 10-8400-201-23, General Repair Procedure for Clothing and Inspection Equipment The applicable TM/TO, for the item to be repaired, will be the damage repair criteria guidance.

c. Cleaning. Cleaning will be done in accordance with the applicable TM/TO Clothing will not be returned to unit supply, Repairable Exchange (RX) point, or salvage points needing to be cleaned. Cleaning of all flight clothing is the responsibility of the aircrew member The ALSE technician will instruct the users in the proper use and care of flight clothing. Table 11-2 gives references for flight clothing.

11-15. Survival Kits. Survival kits currently are issued only to individual aircrew personnel and only for the climatic zone they will be operating in. The current survival kits are' Individual Hot Climate, Individual Cold Climate, Individual Overwater, and the Rigid Seat Survival Kit (RSSK). The RSSK kit will contain only one of the following climatic conditions: Hot Climate, Cold Climate or Overwater Included are two types of survival vest kits; the SRU-21 IP is used by all aircrew personnel except OV-1 aircrews who wear the vest designed for the OV-1 aircraft. Both types of vests come in two sizes; the median chest size is 37 inches, and that determines which size is to be used by the wearer The survival kits contain items to support the aircrew personnel in a particular environment, i e. , land, either Hot or Cold Climate, or Overwater The Overwater kit contains a one man liferaft This is the only kit that contains flotation equipment. The survival vests ensure the individual will have a limited amount of survival equipment. The vests are a supplement to the survival kits. Individual underarm flotation equipment is available to those aircrew personnel who fly overwater and is worn with the vest. AR 95-1 and AR 95-3 regulate the use of survival equipment for Army aircraft and aircrews. Table 11-3 gives references for survival kits.

a. Inspection. Inspection of the survival kits will be in accordance with TM 55-1680-317-23&P, Army Aircraft Survival Kit Maintenance Manual.

b. Repair. Repair/replacement will be in accordance with TM 55-1680-317-23&P, and FM 10-16, General Fabric Repair Most survival items will be required to be replaced rather than repaired This is due to the nature of packaging for the particular item or the shelf life. The RSSK lid and lower container may be repaired in accordance with TM 55-1500-204-25/1, using Parts Kit Repair, Fiberglass NSN 1560-00-8569222. This Is for the fiberglass repair of the container.

c. Cleaning. Clean survival kits using the following procedures.

(1) Clean the canvas inner or outer cases using procedures. In TM 10-8400-201-23 for lightweight load carrying equipment.

(2) Clean the RSSK lid and lower case using soap and warm water; rinse with clean, warm water, and dry with a clean cloth. On the lid, finish the drying process by using compressed air to ensure no moisture remains In the release mechanism.

(3) Empty the contents of all pockets of the survival vest and remove any flotation equipment. Wash the empty vest using soap and warm water. Rinse with clean, warm water. Put vest on a hanger and air dry out of direct sunlight. The vest may be machine washed using a delicate wash cycle.

Table 11-2. References for Flight Clothing

Publication	Description
TM 10-8400-201-23	Organizational and Direct Support Maintenance Manual: General Repair Procedures for Clothing and Individual Equipment
TM 10-8400-202-13	Maintenance Instructions for NOMEX Flight Gear Coveralls Types CWU-27/P and CWU-28P; Gloves, Type GS-FRP-2; Jacket Flyer's, Summer, Type CWU-35/P and Winter, Type CWU-45/P Hood, Flyer's (CWU-17/P Jacket); Trousers, Flyer's Extreme Cold Weather, CWJ-18/P (TO 14P3-1-112)
TM 10-8415-206-12P&P	Operator's and Organizational Maintenance Manual Including Repair Parts and Special Tools List for Helmet, Flyer's, Protective, Model SPH-4 Regular and X-Tra Large
TM 10-8470-202-13	Operation and Service Instructions for Ground and Aircrew Body Armor (TO 14P3-1-102)
TM 10-8475-200-13	Use, Inspection, Fitting, and Maintenance Instructions for Anti-Exposure Assembly. Type CWU-21/P (TO 14P3-5-81)
TM 10-8475-202-13	Operation, Service and Maintenance Instructions for Quick Donning Anti-Exposure Flying Coverall, Type CWU-16/P TO 14P3-5-61
TM 10-227	Fitting of Army Uniforms and Footwear
FM 10-16	General Fabric Repair
FM 10-267	General Repair for Clothing and Textiles
FM 21-15	Care and Use of Individual Clothing and Equipment
CTA 50-900	Clothing and Individual Equipment
FED STD 757	Stitches, Seams, and Stitching
FM 1-508	Maintaining Aviation Life Support Equipment (ALSE): Maintenance Program

11-16. Flotation Equipment. Flotation equipment consists of underarm flotation bladders (life preservers), one man liferafts, seven man liferafts and 20 man multi-place liferafts. All flotation equipment contains an air bladder or air chambers, an inflation device, inflating gas (usually CO_2) in cylinders of varying sizes and capacities to fit the particular piece of flotation equipment, and a topping off valve to replenish lost gas or to relieve excess pressure. The device will either be an oral inflation tube or a hand pump in the case of multi-place rafts. The type and quantity of flotation equipment will depend on the type of aircraft being flown and the number of aircrew and passengers on board (refer to table 11-4, Liferafts for Aircraft.) Any and all flotation equipment used for training will not be used as serviceable equipment for survival kits or issued for individual use in lieu of serviceable flotation equipment. There will be no waivers for this policy. Flotation equipment used for training equipment will be visibly marked FOR TRAINING ONLY in accordance with TM 5-4220-202-14/TO 14S-1-102. Table 11-5 gives references for flotation equipment.

Table 11-3. References for Survival Kits

Publication	Description
TM 9-1370-203-20P& P	Organizational Maintenance Manual for Military Pyrotechnics
TM 10-8400-201-23	General Repair Procedures for Clothing and Individual Equipment
TM 55-1680-316-10	Operator's Manual for Rigid Seat Survival Kit and Survival Vest for OV-1 Aircrews
TM 55-1680-317-23P & P	Maintenance Manual for Army Aircraft Survival Kits
TM 55-1680-322-12	Operation and Service for Distress Marker Light, P/N SDU-5/E
TM 55-1680-348-10	Survival Kit, Cold Climate, Individual
TM 55-1680-349-10	Operator's Manual for Survival Kit, Hot Climate
TM 55-1680-350-10	Operator's Manual for Survival Kit Overwater, Individual
TM 55-1680-351-10	Operator's Manual for SRU-21/P Army Vest
FM 1-508	Maintaining Aviation Life Support Equipment (ALSE): Maintenance Program
FM 10-16	General Fabric Repair
FM 10-267	General Repair for Clothing and Textiles
FM 10-1269	Repair of Canvas and Webbing
FM 21-15	Care and Use of Individual Clothing and Equipment
FED STD 757	Stitches, Seams and Stitching
DA PAM 738-751	Functional Users Manual for the Army Maintenance Management System-Aviation (TAMMS-A)
TB 9-1300385	Munitions Suspended or Restricted
TB 740-10	Quality Control Depot Storage Standards. Appendix M Medical Supplies.
DOD Medical Catalog	VOL I, VOL II, VOL III MCRL I, II, III
DOD 5154.4S	DOD Ammunition and Explosives Safety Standards
SB 8-75 SERIES	Army Medical Department Supply Information 8-75-1 thru 8-75-35
SB11-6	FSC Class 6135; Dry Battery Supply Data
SB11-30	FSC Class 6135; Dry Battery Management Data

Table 11-3. References for Survival Kits - CONT

Publication	Description
SB742-1370-94-721	Signal, Smoke and Illumination, Marine MK13, MOD O Surveillance Function Test

a. Precautions. Comply with the following precautions when handling or accomplishing maintenance on liferafts:

(1) Prevent hydrocarbons, such as gasoline, oil, or grease from contacting liferaft materials.

(2) Do not drop or throw liferafts, as damage to liferaft or accessories may occur.

(3) Do not step or sit on packed liferafts, or place weights or items on liferafts which are not required.

(4) Do not step on any part of liferaft while wearing shoes when accomplishing inspections or repairs.

b. Stowage in Aircraft. Liferafts shall be stowed in aircraft as follows:

CAUTION

Do not sit or place equipment or tools on liferafts stowed in aircraft. Keep the liferaft free of oil, grease, and other rubber deteriorating agents. Damage to liferaft may otherwise result.

Table 11-4. Liferafts for Aircraft

Aircraft Type	Aircraft Model	Maximum number on board Crew	Pax	Total	Authorized liferaft one-man	Authorized optional liferaft 7-man	Authorized- liferaft 10-12 man	Optional liferaft 20-man
OV-1	B,C,D	1	1	2	2			
RV-1	C,D	1	1	2	2			
U-8	F	1	5	6	6	1	1	
UV-18	A	2	18	20	20	3	2	
U-21	A,D,F,H,J	2	6	8	8	1	1	
RU-21	A,B,C,D	2	6	8	8	1	1	
AH-1	G,S	2	0	2	2			
TH-1	G	2	0	2	2			
AH-64	A	2	0	2	2			
RC-12	D,G	2	1	3	3			
C-12	A,C,D							
CH-47	A,B,C,D	3	33	36				2
CH-54	A,B	5	0	5	5			
CH-54	A,B, with pod	5	45	50	50			2
OH-6	A	1	3	4	4			
OH-58	A,C	1	3	4	4			
OH-58	D	2	0	2	2			
UH-1	B,X	2	4	6	6	1		
UH-1	B,C,M	2	7	9	9	1	1	
UH-1	D,H	2	11	13	13	2		
UH-60	A	3	14	17	17	2		
T-42	A	1	3	4	4	1		

NOTE

Underarm flotation devices must be worn by all persons on board all Army Aircraft flying over water. This requirement complies with AR 95-3.

(1) Prior to stowing liferaft assemblies in aircraft, inspect liferaft compartment or stowage area to ensure freedom from oil, dust, water, sharp protruding edges, or any foreign substances or articles that could cause damage to the liferaft.

(2) Refer to aircraft manuals for proper installation and location within the particular aircraft.

(3) Leave liferaft assemblies stowed in fuselage (not in compartment) in the carrying cases. Stow auxiliary kit in same manner.

(4) Heavy multi-place liferafts are to be carried, not dragged over floor areas.

c. Inspection. All flotation equipment will be inspected in accordance with TM 5-4220-202-14/TO 14S-1-102.

d. Repair. All repairs of flotation equipment will be in accordance with TM 5-4220-202-14/TO 14S-1-102. The flotation maintenance facility will conform to the requirements of the same TM/TO.

Table 11-5. References for Flotation Equipment

Publication	Description
TM 55-1680-321-12	Inspection, Maintenance and Disposition Instructions, Desalter Kit, Type MK-2
TM 5-4220-202-14/ TO 14S-1-102	Maintenance Instructions with Parts Breakdown USAF Flotation Equipment
FM 1-508	Maintaining Aviation Life Support Equipment (ALSE): Maintenance Program

Table 11-6. References for Oxygen Equipment

Publication	Description
TM 55-1660-245-13 TO 15X-1-1 NAVAIR 03-50-1	Maintenance Instructions: Oxygen Equipment
TM 55-1669-247-12 TO 15X-3-6-1	Operation, Fitting, Inspection and Maintenance Instructions for MBU-12/P Pressure-demand Oxygen Mask.
TM 55-6695-217-13	Operation and Maintenance Instructions for Tester, Oxygen Mask, Headset, Microphone and Flash Goggles Type MQ-1A
TM 55-6695-217-23 & P	Aviation Unit and Aviation Intermediate Maintenance Repair Parts and Special Tools List, Tester Oxygen Mask, Headset, Microphone and Flash Goggles Type MQ-1A.

e. Cleaning. All cleaning of flotation equipment will be in accordance with TM 5-4220-202-14 and TO 14S-1-102.

11-17. Oxygen Equipment. Oxygen equipment for ALSE consists of that equipment not a permanent/integral part of the aircraft/aircraft airframe. Oxygen to be used is Oxygen, Breathing, Aviator's, MIL-0-27210. The cylinder is color-coded with a green top, white band, green band and a green body in accordance with MIL-STD 101. There are several types of oxygen. Aviation oxygen is dry compared to the wet medical oxygen. Dry oxygen for aviation is required because of high altitude and low temperatures. Medical oxygen, which is wet, can freeze causing malfunction of oxygen equipment and oxygen masks. The handling of oxygen demands the safe handling, care, and attention to details. Refer to TM 55-1660-245-13 and TO 15X-1-1. There are many restrictions to servicing oxygen equipment; all must be adhered to. A clean environment is required to service personal oxygen equipment, masks-regulators-oxygen bottles, etc. The mask, because it is on the users face, if not properly serviced, could cause facial skin, throat, and lung problems, or at worst, no oxygen flow when needed causing hypoxia and possible death. Table 11-6 gives references for oxygen equipment.

a. Inspection. Inspection of all oxygen equipment will be in accordance with the applicable TM/TO.

b. Repair. Repair of all oxygen equipment will be in accordance with the applicable TM/TO/NAVAIR. The maintenance facility will conform to the requirements of TM 55-1660-245-13/TO 15X-1-1/NAVAIR 03-50-1) a tri-service manual for oxygen and some oxygen equipment maintenance including the requirements for the oxygen maintenance area.

c. Cleaning. Cleaning of oxygen equipment will be in accordance with the applicable manual for that piece of oxygen equipment.

11-18. Signaling Devices. Signaling devices are flares, whistles, reflections from shining surfaces (mirrors, plexiglass from doors or windows etc.), smoke, radios, sea dye, cloth, vegetation, and rocks. The use of these items are found in FM 21-76 Survival Manual or AFM 64-5 Survival Manual or the applicable survival radio TM/TO. Caution must be used with flares and fire signals. Table 11-7 gives references for signaling devices.

a. Inspection. Inspection will be accomplished in accordance with the applicable TM/TO/NAVAIR.

b. Repair. Repairs, if any, will be accomplished in accordance with the applicable TM/TO/NAVAIR.

c. Cleaning. Cleaning will be accomplished in accordance with the applicable TM/TO/NAVAIR.

11-19. First Aid Kits. This section establishes the responsibility and procedures for installation and inspection, and furnishes information regarding source of supply of approved First Aid Kit, General Purpose, Panel Mounted, NSN 6545-00-919-6650, for aircraft. This kit provides first aid essentials for use by flight crews and passengers sustaining injuries due to combat, accident, malfunctioning of equipment, or survival conditions.

NOTE

This publication will be used as authority to identify and inspect first aid kits for Army aircraft. Other references in this chapter are used only for purposes specified.

a. Basis of Issue. The property book officer for authorized activities will submit requests for first aid kits to the supporting medical supply officer, based on one per crew compartment in Army aircraft; and one for each five passenger seats/capacity or fraction thereof.

b. First Aid Kit Installation. Maintenance personnel will insure that serviceable first aid kits are installed in aircraft, as specified in the applicable -10 manual. The absence of required serviceable first aid kits from an aircraft combined with the inability of securing and installing required kits prior to flight shall warrant placing the aircraft in a limited (one kit in crew compartment and one kit for each five passenger seats installed or fraction thereof) operable status, IAW DA PAM 738-751. Kits will be installed in aircraft locations indicated in the applicable aircraft maintenance technical manual. When the required quantity of first aid kits, for troop transport mission(s) is in excess of the provisions for installation of the kits, the additional kits will be carried on board as loose equipment. Upon completion of mission(s), the additional first aid kit(s) will be removed and turned in.

c. Identification. There are two configurations of authorized first aid kits, with identical NSN part numbers for use on aircraft. The older design as shown in figure 11-1 is marked with a red cross, and the words First Aid Kit, Airplane, appear on the outer fabric case. It has a side pocket compartment. The newer configuration as shown in figure 11-2 is marked with a red cross and the words First Aid Kit, General Purpose, appear on the outer fabric case. The older design kit will be used until stocks are depleted and the kit is no longer serviceable. Original markings will not be changed for standardization purposes. See TM 55-1500-345-23 in the event that the markings on kits must be restored.

d. Protection of Contents. The first aid kit will be closed and sealed when carried in aircraft. Serviceable kits will always be tagged with a DD Form 1574 (Serviceable Tag-Materiel) as shown in figure 11-3, properly completed and attached. This will be the responsibility of designated personnel.

NOTE

This seal will be broken on installed first aid kits only when the contents are to be used for first aid treatment of an injury. When the seal has been broken, it will be annotated on DA Form 2408-13-1/DA Form 2408-13-1-E (Aircraft Inspection and Maintenance Record).

e. Controlled Substances. All narcotics and non-narcotic controlled substances have been deleted from this medical kit. Controlled substances are normally not included in the medical kit. Amphetamines will not be added to medical kits under any circumstances.

Table 11-7. References for Signaling Devices

Publication	Description
TM 9-1300-200	Ammunition, General
TM 9-1300-206	Ammunition and Explosives Standards
TM 9-1300-214	Military Explosive
TM 9-1300-250	Ammunition Maintenance
TM 11-5820-640-15	Operator's, Organizational, Direct Support, General Support Depot Maintenance Radio Sets AN/URC-10, AN/URC-10A and ACR RT-10
TM 11-5820-640-25P	Combined Organizational, DS, GS, and Depot Maintenance Including Repair Parts and Special Tools List Radio Set AN/URC-10A
TM 11-5820-767-12	Operator's and Organizational Maintenance Manual Including Repair Parts and Special Tools List; AN/URC-68
TM 11 -5820-767-20P	Organizational Maintenance Manual Including Repair Parts and Special Tools List Radio Set AN/URC-68
TM 11 -5820-767-30P	Direct Support Maintenance Repair Parts and Special Tools List for Radio Set AN/URC-68
TM 55-5820-767-34	Direct Support Maintenance and General Support Maintenance Manual for Radio Set AN/URC-68
TM 11-5820-800-13 & P	Operator's Aviation Unit and Intermediate Maintenance M anual Including Repair Parts and Special Tools List for Radio Set AN/PR C90
TM 11-6625-2631-14	Operator's Organizational, Direct Support and General Support Maintenance Manual for Test Set Battery TS-2530/UR and Test Set TS-2530A/UR
TM 11-6625-2631-40P	General Support Maintenance Repair Parts and Special Tools List for Test Set, Battery TS-2530/UR and TS-2530A/UR
TM 11-6625-2632-14	Operator's Organizational, Direct Support and General Support Maintenance Manual Including Depot Maintenance Repair Parts and Special Tools List for Radio Test Set AN/PRM-32
TM 11-6625-2632-14-1	Operator's, Organizational, Direct Support and General Support Maintenance Manual Radio Set AN/PRM-32A

Table 11-7. References for Signaling Devices - CONT

Publication	Description
TM 11 -6625-2632-24P-1	Organizational, Direct Support, and General Support Maintenance Repair Parts and Special Tools List for Radio Test Set AN/PRM-32A
SB 11-6	FSC Class 6135, Primary Battery Supply Data
SB 11-30	FSC Class 6135; Primary Battery Management Data
SB 742-1370-94-721	Signal, Smoke and Illumination Marine: AN-MK 13, MOD O (L275) Ammunition Surveillance Surveillance Procedures
TM 55-1680-317-23 & P	Maintenance Manual for Army Aircraft Survival Kits
TM 55-1680-322-12	Operator's and Service, Distress Marker, Light, SDU-5/E

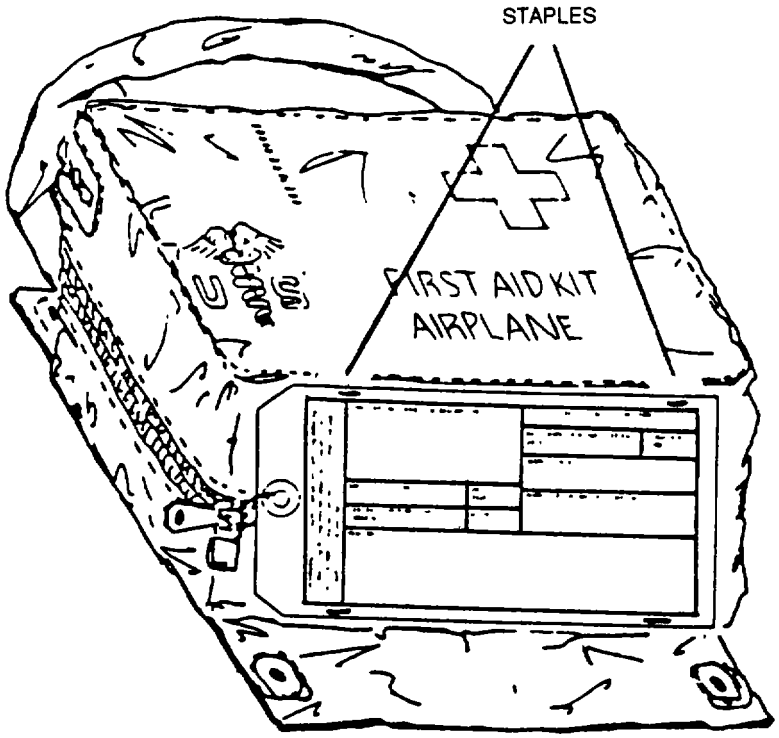

Figure 11-1. First Aid Kit, Airplane (Older Configuration)

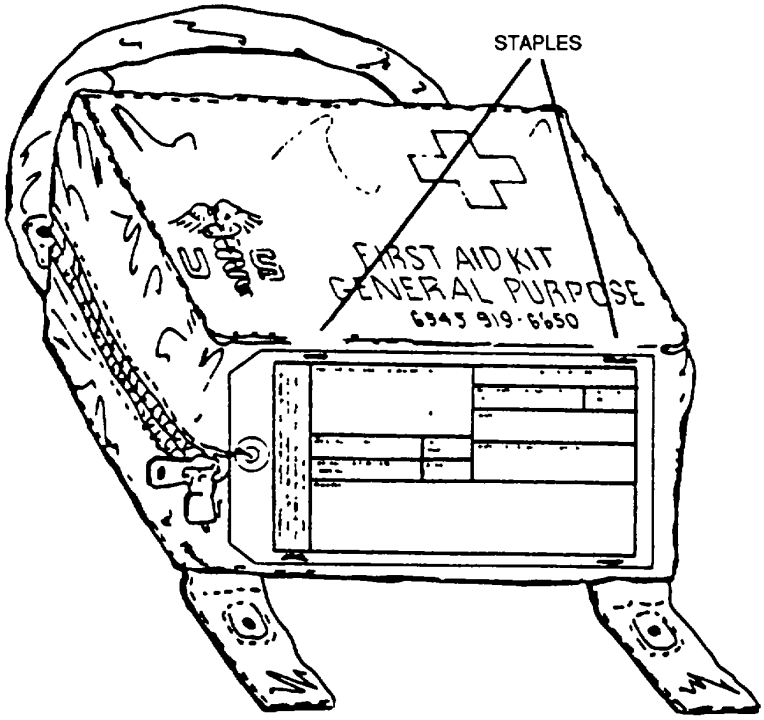

Figure 11-2. First Aid Kit, General Purpose (Newer Configuration)

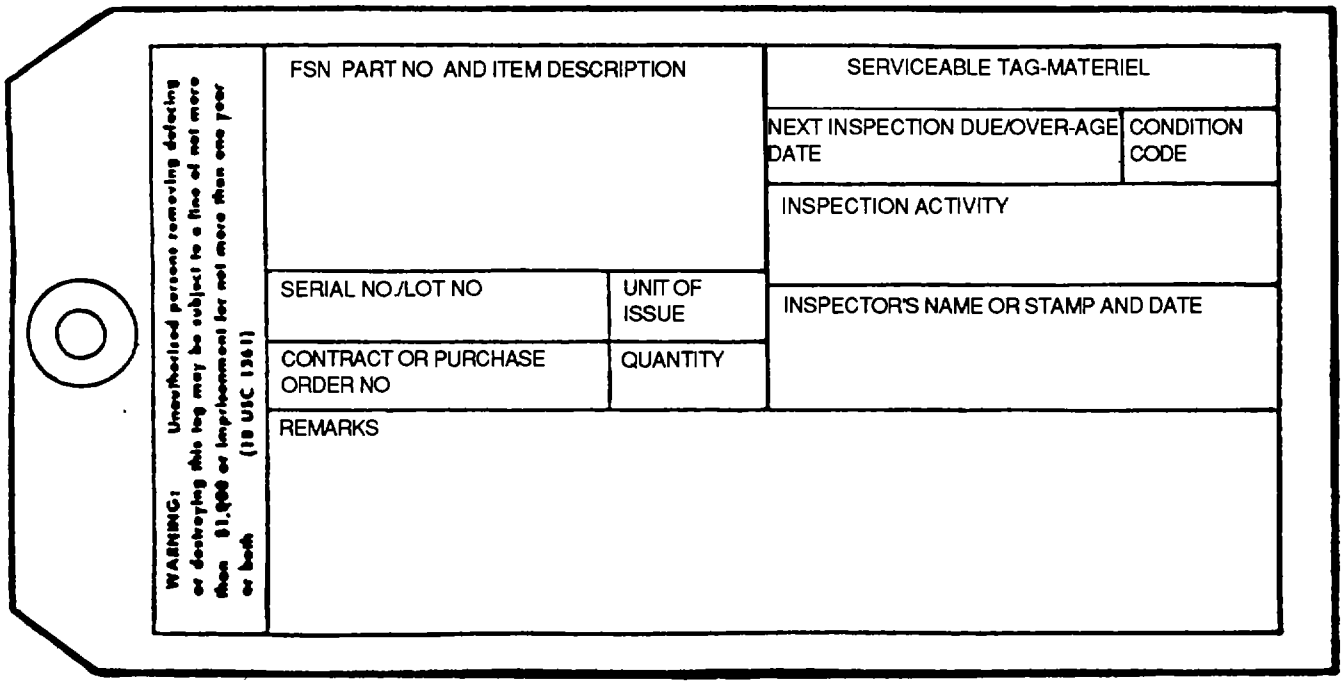

Figure 11-3. Serviceable Tag-Materiel (DD Form 1574) (Yellow)

f. Inspection. Inspections of first aid kits by ALSE medical personnel, or other certified personnel are described in the following paragraphs.

(1) Inspection by ALSE, medical or other certified personnel. First aid kits will be inspected for serviceability and completeness upon receipt. Inspecting personnel will annotate the DD Form 1574 with the date of the shortest expiration dated item contained in the kit. This date will be used to schedule the next inspection due, or when:

- Suspension of the kit, or an item within the kit, is announced by the supporting medical supply officer, the US Army Medical Materiel Agency, or the Medical Supply Bulletin (SB8-75-SERIES).
- The kit is turned in by using activities. Using activities will ensure that the kit is removed for inspection and quality assurance prior to the next inspection due/overage date or immediately upon receiving notice from the supporting medical supply officer of an applicable item suspension. Personnel may be medical, ALSE, TIs or safety personnel as authorized in writing by the unit commander.

(a) Inspection procedures. ALSE medical or certified personnel shall accomplish the following inspection procedures:

1 Ensure kit is properly marked using the appropriate material condition tags and labels listed in paragraph 5-3.

2 Replace all expiration dated items with less than 12 months shelf/service life whenever possible. The NEXT INSPECTION DUE DATE annotated on the serviceability tag will be that of the item that has the shortest expiration date or one year after the inspection which ever comes first.

3 Ensure that the kit contains no Schedule II controlled medical items unless a current MACOM authorization is on file.

4 Ensure that contents of the kit are complete and serviceable.

5 Ensure that items are inspected in accordance with the following inspection tests.

a Replace bandages, dressings, and compresses when there is evidence of mildew, mold, dry rot, discoloration, or when instructions are illegible.

b Replace adhesive tape when the adhesive mass separates from the backing fabric upon unwinding (unwinding shall consist of not less than six inches nor more than seven inches of length from the starting end) or when the adhesive mass is not uniform.

c Replace petrolatum gauze when there is evidence of separation or delamination of the package material or evidence of petrolatum seepage.

d Replace ammonia inhalant ampules when there is evidence of broken glass or the container shows staining marks.

e Replace surgical razor blade when there is evidence of rust, corrosion or pitting on the metal surface of the blade.

f Ensure that a list of contents is included in the kit. Local reproduction of the listing, Table 11-8 is authorized.

g Ensure that component items of first aid kit that are deleted through normal supply actions are replaced or withdrawn from the kit. It is not necessary to recall the kit in use to effect replacement of deleted items unless otherwise specified.

NOTE

Using activities may use the inspection codes identified in DLAM 4155.5, Quality Control, Depot Serviceability Standards manual, for additional assistance in the identification of serviceable/non-serviceable medical material contained in the first aid kit.

(2) Inspection by maintenance personnel. Installed First Aid Kit will be inspected by maintenance personnel at the Preventive Maintenance Daily inspection as prescribed in the applicable aircraft Preventive Maintenance Daily (PMD) inspection checklist.

NOTE

If a seal has been broken, and no kit is immediately available, a circled red X status symbol will be entered in block 16 and a statement entered in Part I, Fault Information Section of DA Form 2408-13-1/ DA Form 2408-13-1-E (Aircraft Inspection and Maintenance Record) restricting the aircraft to a specified number of passengers until a serviceable kit is installed. Kits on which seal has been broken will be turned in to designated ALSE personnel for a replacement kit.

When kit is due for an inspection or kit is considered unserviceable due to missing or illegible materiel condition tag, torn case, broken seal, or (on older design) incomplete side pocket contents, etc., inspector will remove DD Form 1574 (Serviceable Tag-Materiel) and retag kit with DD Form 1577-2 Unserviceable (Repairable) Tag-Materiel, as shown in figure 11-4.

g. *Sealing*. The following paragraphs describe the materials and procedures used to seal first aid kits.

(1) *Materials*. Requisition the following materials through normal supply channels:

- Seal, lead, 3/8-inch-diameter, 1/8-inch-thick, with 5-½-inch 27 AWG single-crimped copper wire, NSN 5340-00-391-4240.
- Flat-head pin, NSN 5315-00-989-7631.
- Seal, anti-pilferage, NSN 5340-00-779-3516 (alternate seal).
- Seal, anti-pilferage, NSN 5340–01–004–9387 (alternate seal).
- Copper wire, NSN 5340-00-391-4240.

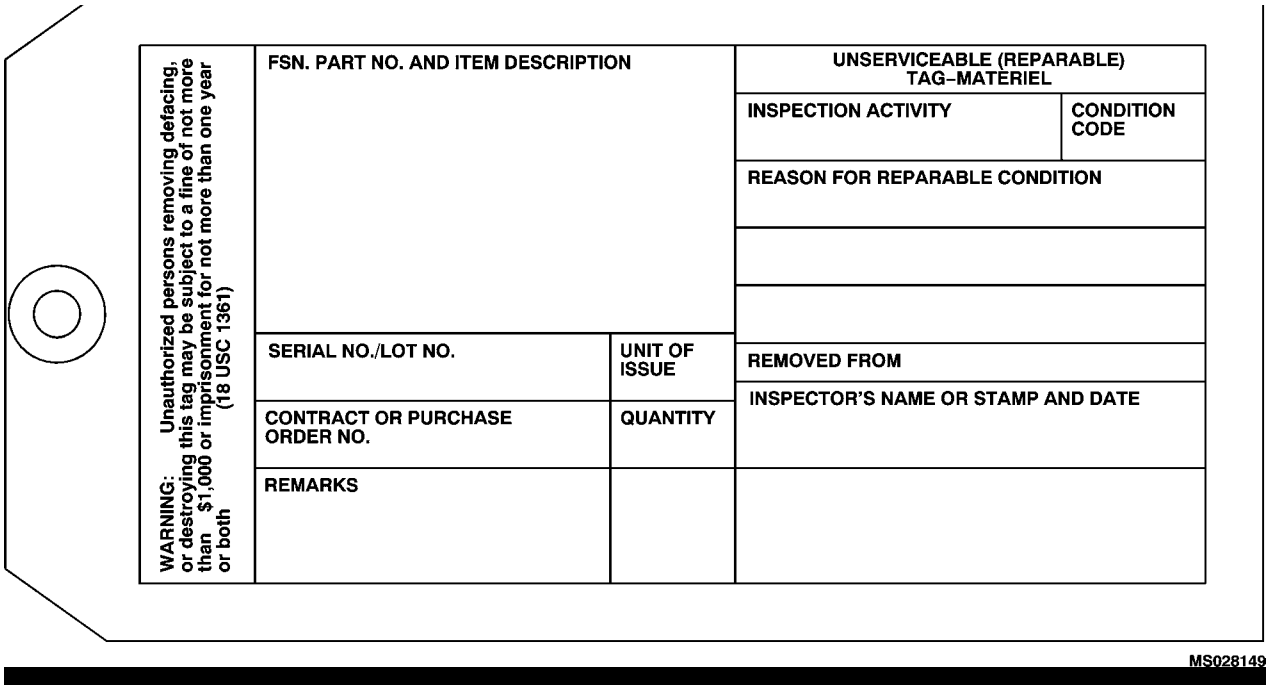

Figure 11-4. Unserviceable (Repairable) Tag-Material (DD Form 1577–2) (Green).

NOTE

If copper wire, NSN 5340-00-391-4240, is not available, use copper wire, NSN 6145-00-234-4991, and lead seal NSN 5340-00-598-3417. Use press seal NSN 5120-00-221-1668 for crimping the lead seal.

(2) ***Sealing procedures*****.** Accomplish the following procedures when sealing first aid kits:

(a) Complete DD Form 1574 in accordance with DA PAM 738-751.

NOTE

The inspection DUE DATE will be no longer than the first item with an expiration period. That date will become the DUE DATE for the next inspection.

Supplies of Materiel Condition Tags will be requisitioned through normal publication channels.

(b) Reseal kit by closing zipper and placing slide fastener tab in down and locked position, and install flat-head pin into slide fastener loop.

(c) Slip free end of sealing wire through hole in end of flat-head pin already installed in loop and pull wire through until lead seal is against end of pin.

(d) Continue by passing free end of wire through one of the holes in seal and pull wire so that seal is held tightly against end of pin.

(e) Proceed, by passing end of wire through hole of materiel condition tag.

(f) Position tag along with wire, approximately one inch away from seal, continue by passing the free end of wire through one of the holes in the lead seal.

(g) Extend wire so that both wires from tag to seal are even, then take free end of wire, and pass it through hole in materiel condition tag again.

(h) Crimp seal, then twist materiel condition tag three or four times. This will create a loop that will hold tag in position.

(i) After completing the resealing action, position tag to the double edge of fabric, as shown in figure 11-5, with a minimum of two staples from a standard office type stapler. This action is intended to reduce the inadvertent loss of the tag due to wind movement when operating aircraft with door/windows open.

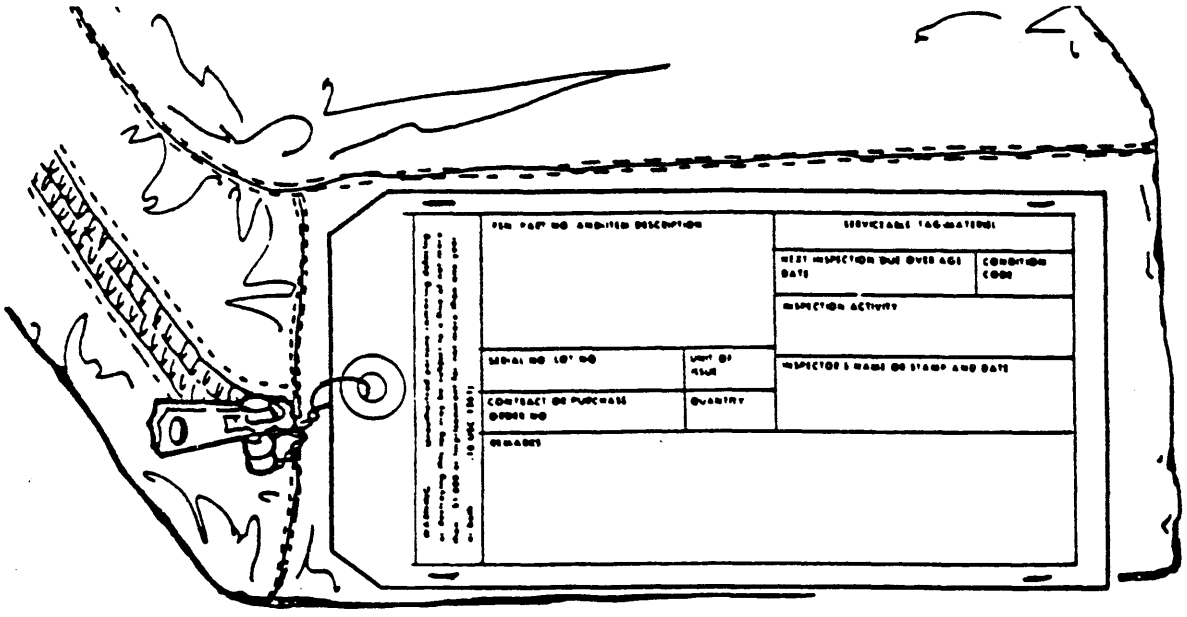

Figure 11-5. Properly Attached Flat-Head Pin, Lead Seal, and Identification Tag.

NOTE

Only one strand of 27 AWG is to be put through the lead seal. Using more than a single strand of 27 AWG wire could make the breaking of the seal more difficult and hinder ready accessibility to the first aid components.

Any slack in wire between lead seal and end of pin is to be avoided; however, do not place pin under such extreme tension that the possibility of accidental breakage is increased.

h. Replacement of Components. A kit will be considered unserviceable after the expiration date of the first item that expires within the kit, or when the DD Form 1574 tag is missing, or the seal is missing. The kit will be retagged with a DD Form 1577-2 tag and the inspector will annotate in Reason for Repairable Condition block, Inspection Due, per paragraph 11-19f or the applicable aircraft maintenance manual. Kits requiring replacement of items will be reconstituted by authorized unit ALSE/ Certified personnel in accordance with the list of items contained inside each kit and with DOD Medical Catalog. Replenishment items will be requested from the supporting medical supply officer.

i. First Aid Kit Components. First aid kit items required are listed in table 11-8 and references in table 11-9.

j. Inspection Training Procedures. Only those personnel medically trained (MOS 91B, C or 91Q) and qualified, or ALSE school trained (with an ASI of Q2), may certify and instruct other unit personnel in the inspection of first aid kit, general purpose, panel mounted, aircraft. ALSE personnel school trained, with an ASI of Q2, will not be subject to retraining at the unit level. Only certified ALSE, medical or other certified personnel will be appointed on unit orders by the Commander, to perform inspections on the first aid kit, general purpose aircraft.

(1) Training. Training will consist of the following using an aircraft first aid kit:

(a) Using the instruction from paragraph f for inspection procedures.

(b) Using the instructions from paragraph f and TB 740-10, Appendix M, for the replacement of time expired components of the first aid kit.

(c) Using the instructions from paragraph g for the sealing and tagging of the kits.

(d) Describing what effects outdated or contaminated components would have on an injured or wounded person.

(2) Certification. Upon successfully completing the course of instruction, will be noted on a memorandum from the certifying individual to the unit commander concerned.

NOTE

Under no circumstances will personnel, other than ALSE qualified, authorized under the guidance of this paragraph, maintain other ALSE equipment including those first aid kits in survival kits in accordance with AR 95-3.

11-20. Nuclear, Biological, and Chemical Equipment. Unit chemical personnel are supposed to support training and maintenance of all Nuclear, Biological, and Chemical (NBC) equipment. If the ALSE technician has been assigned this task, particularly the aircrew members equipment, the ALSE technician should become very proficient in the care, use, inspection, repair or replacement of NBC equipment and train the aircrewmembers in the care and use of their NBC equipment. NBC equipment consists basically of the following: a breathing apparatus, mask with filters to eliminate airborne chemicals, protective clothing to protect the individuals from airborne chemicals, cooling apparatus to cool the individuals body while wearing the protective clothing, and warning devices to alert personnel of contamination by chemicals of the air in the immediate vicinity, or dangerous radiation levels in the area. Table 11-10 gives references for NBC equipment.

a. Inspection. Inspections will be accomplished in accordance with the applicable TM, TO, NAVAIR for the particular item involved.

b. Repair. Repairs will be accomplished in accordance with the applicable TM, TO, or NAVAIR for the item at the authorized maintenance level.

c. Cleaning. Cleaning will be accomplished in accordance with the applicable TM, TO or NAVAIR for the particular item needing to be cleaned.

Table 11-8. First Aid Kit Components

Stock No.	Nomenclature	Unit	Quantity	Shelf life (months)
6545-00-912-9860	Case, medical instrument and supply set, nylon non-rigid, No. 2, 7-1/2 inches long by 4-3/8 inches wide by 4-1/2 inches high	EA	1	Conditional
	Inside upper, pocket			
6505-00-106-0875	Ammonia inhalant solution, aromatic 15 to 22 PCT Ammonia and 35 to 40 PCT Ethyl Alcohol	PG	10	Conditional
6510-00-200-3075	Compress and bandage, camouflaged, 2 by 2 inches, 4S	PG	1	Conditional
6510-00-201-1755	Bandage, muslin, compressed, camouflaged, 37 by 37 by 52 inches.	EA	1	Conditional
6510-01-112-6414	Gauze, petrolatum, 3 by 36 inches, 3s	PG	3	Conditional
6515-00-754-0426	Blade, surgical prep razor, straight single edge, 5s	PG	1	Conditional
	Inside lower, pocket			
6510-01-060-1639	Adhesive tape, surgical, camouflaged, 1 inch by 2 yards	PG	3	36
6510-00-159-4883	Dressing, first aid, field, camouflaged, 4 by 7 inches	EA	3	Conditional
6545-00-853-6309	First aid kit, eye dressing	EA	1	36
	In outside, pocket (If old type case is used)			
6510-01-010-0307	Providone-iodine solution, USP, 10 percent pads, individually packaged	PK	10	36
6510-00-200-3185	Bandage, gauze, compressed, camouflaged, 3 inches by 6 yards	EA	2	Conditional
6510-00-913-7909	Bandage, adhesive, 3/4 by 3 inches (When newer kit is used, these three items will be located in lower pocket)	EA	18	36
6515-01-364-8554	Glove, Patient Examining (Glove is placed inside of Dential Prosthesis Bag)	PG	4	48
6520-00-926-9041	Bag, Dental Prosthesis	PG	1	Conditional

Table 11-9. References for First Aid Kits

Publication	Description
DOD Medical Catalog	VOL I, Identification/Management Data VOL II, Sets, Kits, and Outfits VOL III, MCRL 1, II, & III
SB 8-75-Series	Army Medical Department Supply Information 8-75-1 thru 8-75-33
TB 740-10	Quality Control Depot Storage Standards, Appendix M, Medical Supplies

Table 11-10. References for Nuclear, Biological, and Chemical Equipment

Publication	Description
TM 3-4230-216-10	Operator's Manual for Decontaminating Kit, Skin M258A1, and Training Aid Skin Decontaminating M581A
TM 3-4240-280-10	Operator's Manual for Mask Chemical-Biological: Aircraft ABC-M24 and Accessories Mask Chemical-Biological, Tank M24/M24A1 and Accessories
TM 3-4240-280-23 & P	Organizational and Direct Support Maintenance Manual Including Repair Parts and Special Tools List Mask Chemical-Biological: Aircraft ABC-M24 and Accessories and Mask, Chemical-Biological, Tank, M25/M25A1 and Accessories
TM 3-4240-312-12 & P	Aviation Unit Maintenance, Chemical-Biological Mask Aircrew M43
TM 55-1660-248-12	Operation and Maintenance Instructions Aircrew Chem-Defense Ensemble
FM 3-3	NBC Contamination Avoidance
FM 3-4	NBC Protection
FM 3-5	NBC Decontamination
FM 3-6	Field Behavior of NBC Agents (including smoke and incindaries)
FM 3-10	Employment of Chemical Agents
FM 3-100	NBC Operations

11-21. Restraint Equipment. Restraint equipment, as used in this section, includes safety lap belts, shoulder harnesses, and other fabric devices used in Army aircraft for personnel restraint purposes. Restraint equipment is to be installed as directed in the applicable maintenance manual. On all pilot/copilot and crewman seat belts, the safety belt release handle should point to the left.

NOTE

Seat belts will not be replaced for cosmetic reasons.

a. *Inspection*. All personnel restraint equipment is to be visually inspected at time of installation and at specified intervals thereafter. Inspections are explained in the following paragraphs.

- New Restraint Equipment. Perform daily inspection for new seat belt latches (MS3488(AS)) also Inspect for fingertip access.
- New Assemblies of Restraint Equipment This equipment requires no inspection during depot storage.
- Seat belt latch (MS3488(AS)). Inspect for fingertip clearance. Inspect each seat belt latch by using a steel scale to measure the clearance distance between the inside face of the top of the grip and the top of the webbing, as shown In figure 11-6.

WARNING

Except for leg garters used with the MK-5D ejection seat, all restraint assemblies made of cotton webbing shall be removed from service. Use extreme caution when inspecting restraint equipment on ejection seat equipped aircraft. Ensure appropriate safety pins are installed. Injury to personnel may otherwise result.

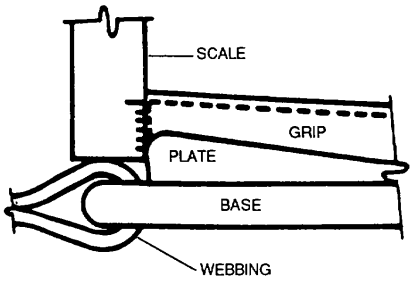

Figure 11-6. Measuring Fingertip Clearance

(1) *Installation inspection* . Visually inspect all restraint equipment prior to installation. Seat belt latches shall be inspected for fingertip clearance in accordance with the following procedures.

(a) Inspect each seat belt latch by using a steel scale to measure the clearance distance between the inside face of the top of the grip and the top of the wedding, as shown in figure 11-6.

(b) If the distance measured above is less than the thickness of gloved fingers (minimum 0.8 inch) alter latch using the following procedures:

1 Open latch so that sides may be placed in vise equipped with aluminum or brass protective plates on jaws.

2 Squeeze sides of latch handle together using constant, even vise pressure until jaws are approximately 1 3/4 inches apart. Latch will deform upward and inward, as shown in figure 11-12.

3 Repeat as necessary to obtain 7/8-inch clearance dimension due to spring back of metal.

4 Perform visual inspection for cracks.

5 Check operation of latch and detent for complete lock and release.

NOTE

When new nylon webbing is installed, it will be .exed by pulling it across or around a metal bar approximately ¼ inch in diameter. This action is accomplished by holding each end of the new webbing and pulling it in a back and forth motion. This will assist in making the webbing pliable by breaking down the .nishing glaze that is applied to new nylon fabric. Repeat the back and forth motion until the glaze on the fabric is broken down to such an extent that the belt or harness can be readily adjusted. The .exing procedure will be accomplished on both sides of the webbing.

(2) Daily inspection. Perform the daily inspection using the following procedures:

(a) Check seat belt shoulder harness, restraint harness, inertia reel strap webbing for:

- Deterioration resulting from contact with foreign matter, (i.e. acid, petroleum based products, strong caustic soaps) shall be cause for removal from service. Surface mold or mildew may be removed by washing. If no deterioration is evident after washing, webbing shall be considered serviceable.

NOTE

Surface mold or mildew may be removed by washing. If no deterioration is evident after washing, webbing shall be considered serviceable.

- Cuts of the webbing caused by a sharp-edged instrument or object that severs the vertical or horizontal yarns of the webbing, shall be reason for removal.

- Broken stitches identi.ed by missing, skipped, torn or ruptured threads in the stitch pattern. Stitching may be repaired and will not be cause for rejection TM 1-1500-204-23-1.

- Fraying of the exterior surface of the webbing, causing separation or rupture of yarns suf.cient to obscure the identity of any yarn exceeding 20 percent of the width or 2 inches in length, shall render the webbing unserviceable. Fuzzing of the exterior surface caused by broken individual filaments in the yarns is not cause for rejection.

NOTE

Fuzzing of the exterior surface caused by broken individual filaments in the yarns is not cause for rejection.

- Discoloration of webbing caused by contact with strong caustic soaps, or acid shall be reason for removal from service. Webbing discoloration resulting from contact with metal articles and hardware is not cause for removal.

NOTE

Webbing discolored or soiled by grease, oil, aviation fuels and hydraulic fluids shall be cleaned, I.A.W. paragraph d , c . Fading of webbing by subjection to sunlight is an unreliable indicator of deterioration and shall not be cause alone for webbing rejection.

(b) Any metal restraint hardware which is corroded or defective in operation shall be inspected for operational use and replaced if found to be substandard or excessively damaged. Missing or unserviceable adjuster webbing retarder springs and loose or missing bolts will be replaced.

(c) Check buckle mechanisms for ease of locking and releasing. When locked, the latch should not have a tendency to release inadvertently, nor should it be excessively difficult to release.

(d) Pilot/troop type belts, check for freedom of movement of the link within the mated hook and guide bar. The link shall not bind in any position (i.e. pivot and hook tip) within its operating limits.

(e) Inertia reels, check for damage, security, positive locking and unlocking, manual lock-unlock control for proper operation.

(f) Examine restraint system attaching points to aircraft. Check for loose bolts, deformity, corrosion or sharp and jagged edges which may damage webbing.

b. Repair. Broken or missing stitches can be repaired using a sewing machine in accordance with the following repair requirements:

- If five or more stitches are broken or loose within one linear inch, restitching is required.

NOTE

When restitching safety belts, restraint harness, hoist operators harness, gunners harness, stitch directly over the original stitching and follow the original stitch pattern as closely as possible.

- Only one repair per stitch pattern is authorized. Restitching should be accomplished with thread which matches the color of the original stitching, when possible. Restitching should be locked by over stitching each end of the stitch formation by ½ inch. All stitching shall be with nylon thread conforming to Spec V-T-295, thread size, stitching pattern and stitches per inch shall be I.A.W. original construction.
- Restitching should be locked by over stitching each end of the stitch formation by ½ inch.
- All stitching shall be with nylon thread conforming to Spec V-T-295, thread size, stitching pattern and stitches per inch shall be in accordance with original construction.

c. Cleaning. Cleaning of personnel restraint equipment will be accomplished when webbing is soiled using the following procedures:

CAUTION

Do not use a bleach. Bleach may cause webbing to deteriorate. No cleaning is authorized to inertia webbing strap. Acids or caustic soaps will cause deterioration of the polymer webbing. Polymer webbing should only be cleaned with mild soap (soap, laundry (CAGEC 881348) P/N P-S-1792 and water.

NOTE

Surface mold or mildew may be removed by washing if not deterioration is evident after washing, webbing shall be considered serviceable.

(1) Prepare a concentrated soap and hot water solution, using laundry soap chips, Federal Specification P-S-1792, or equivalent. Cool the solution not to exceed 100°F (38°C), prior to application.

(2) Dampen an approved clean brush, such as NSN 7920-00-244-7431, with the soap solution and rub lightly over the affected surface area.

(3) Rinse the webbing thoroughly with clear, lukewarm water.

(4) Place webbing in open air or a drying room to dry.

NOTE

Do not expose the wet webbing to freezing temperatures or to direct sunlight during cleaning, drying, or storage. Redying or painting is prohibited.

(5) After cleaning visually inspect in accordance with paragraph a.

WARNING

Improper cleaning or drying of the harness restraints and buckle can weaken them, reduce their effectiveness and can result in serious personal injury or death.

NOTE

Belts utilized in aircraft conducting salt water pick-up training shall be washed in fresh water and corrosion preventive compound (MIL-C-81309, NSN 8030-00-938-1947) shall be applied to metal components.

d. Replacement. Equipment determined to be unserviceable by visual inspection will be replaced. Unserviceable equipment will be disposed of through normal disposal channels to the nearest property disposal activity. The following personnel restraint equipment having dacron or nylon webbing is to be replaced if determined to be unserviceable.

- Safety lap belts (crew or troop)
- Shoulder harness (crew or troop)
- Safety belt tiedown straps

- Personnel restraining harness (gunner and hoist operator)
- Safety belts (airline type)
- Inertia reel strap (webbed strap only)
- Leg restraints
- Litter straps

NOTE

- **Safety belts will not be replaced for cosmetic reasons.**
- **Safety belts having cotton webbing are to be removed from service.**
- **Replace loose, missing, or damaged bolts, nuts, washer, and shims in the anchoring points.**

(1) Spring webbing retarder. Replace spring webbing retarder used in shoulder harness and seat belt webbing adjusters as follows:

(a) For shoulder harness webbing adjuster, P/N MS22007, use spring, P/N 65D34083-7 and the following procedures

1 Hook one end of webbing retarder spring around flat end of knurled locking bar as shown in figure 11-7.

2 Cut a 16-inch length of type 1 nylon cord, and tie the loose ends together to form a loop in the cord.

3 Insert the nylon cord loop through the slot of the adjuster plate, and hook loop over the webbing retarder spring hook end.

4 Pull the nylon cord through adjuster plate slot and around the bar.

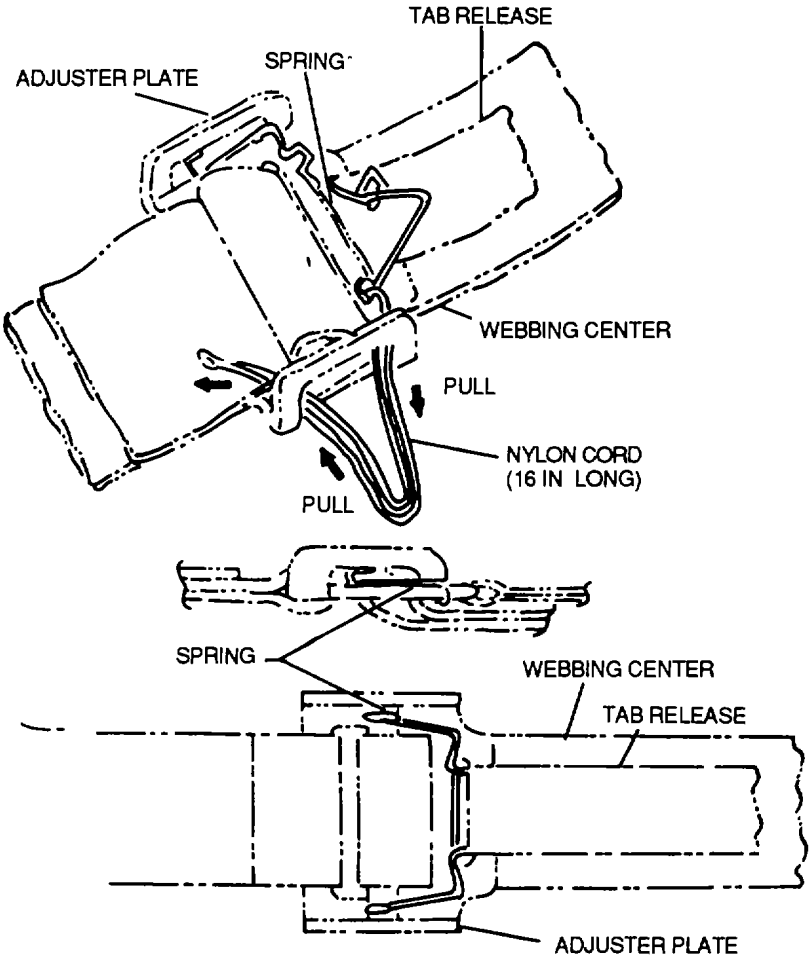

Figure 11-7. Shoulder Harness Webbing Retarder Spring Installation

5 Press the locking bar back with the left thumb, leaving enough space to side the loop through adjuster plate slot once the hook end of the retarder spring has engaged on the locking bar.

6 Pull the nylon cord over the knurled locking bar to disengage the cord from the retarder spring.

7 Work the center of the webbing retarder spring into the adjuster plate pull tab slot.

8 Ensure that shoulder harness webbing is centered on adjuster plate locking bar and can be adjusted, (fig. 11-7).

(b) For seat belt webbing adjuster P/N MS22004-1 NSN 1680-00-876-0971 use spring P/N 62B4407 NSN 1680-00-975-2987 and the following procedures.

1 For ease in replacing webbing retarder spring, remove adjustment webbing from adjuster plate. Spring can be replaced without removal of seat belt from aircraft.

2 Hook one end of webbing retarder spring around flat end of knurled locking bar. Work other end of spring around opposite flat end of knurled bar as shown in figure 11-8.

3 Insert center section of webbing retarder spring into adjuster plate tab release, (fig 11-8).

4 Replace adjuster webbing in adjuster plate. Ensure that webbing is centered on adjuster plate knurled bar and can be adjusted as desired.

(2) Installation or replacement of snap safety pin. Install or replace snap safety pin on personnel restraint harness as follows:

(a) Secure the snap (MS22042-1) in a vise, and ensure that the snap guard Is not contained within the jaws.

(b) Drill a 3/32-inch diameter hole through both sides of snap guard as shown in figure 11-9. Remove all metal burrs and filings from the snap.

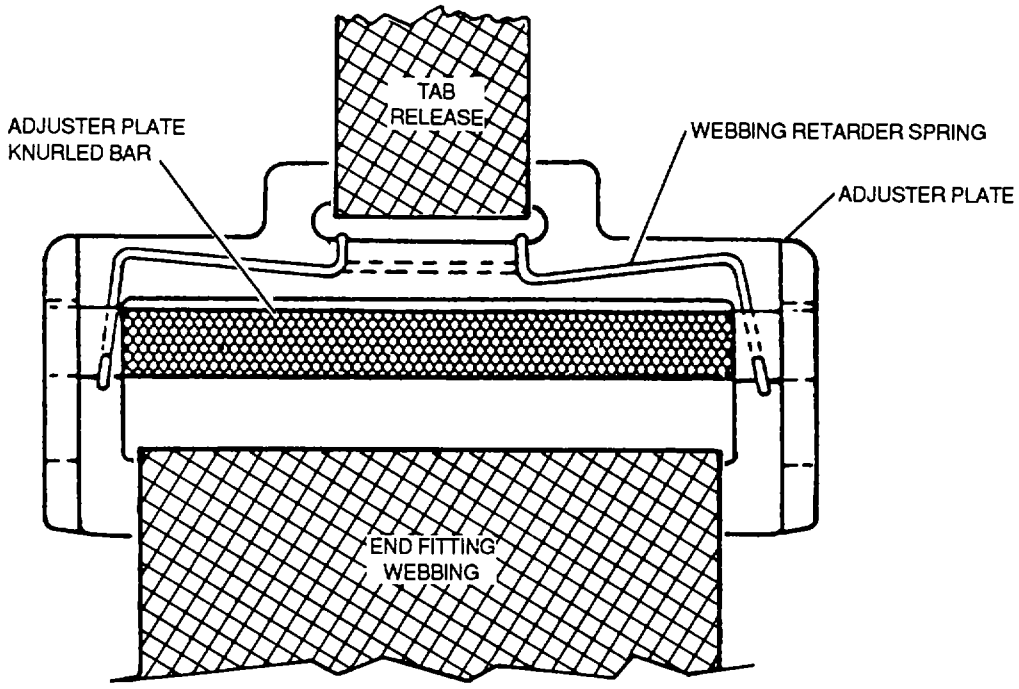

Figure 11-8. Seat belt webbing retarder spring installation

(c) Cut a five-inch length of 0.080-inch diameter corrosion-resistant wire (NSN 9505-00-8924616), and construct a safety pin as shown in figure 11-10.

(d) Cut a 15-inch length of type III nylon cord (NSN 4020-00-246-0688). Remove the inner core threads and sear the ends of the cord.

(e) Pass half of the cord length through the safety pin loop. Tie a square knot up against the loop. Tie another square knot about 4-1/2 inches from previously tied knots.

(d) Pass one loose end of the cord through the snap where the webbing Is attached. Tie the two cord ends together with a square knot as shown in figure 11-11. Tie an overhand knot in each loose end of cord.

11-22. Personnel Parachute and Parachute Harness. Inspection criteria, procedures, and report for the personnel parachute assembly and parachute harness are explained in the following paragraphs.

a. *Inspection Criteria*. Any of the equipment listed below which is in use, installed in aircraft as extra equipment, located in an aviation unit ready-for-use facility, or in the possession of aircraft crew members will be inspected on a routine basis every 30 days and prior to issue for use. When an aviation unit Is not conveniently located, E.G. on same installation as their supporting parachute packing activity, designated parachute inspectors will check and ensure that shelf/service life items are withdrawn from use at the end of their service life in accordance with TB 43-0002-4 and will sign the required document to support turn-in of expired items.

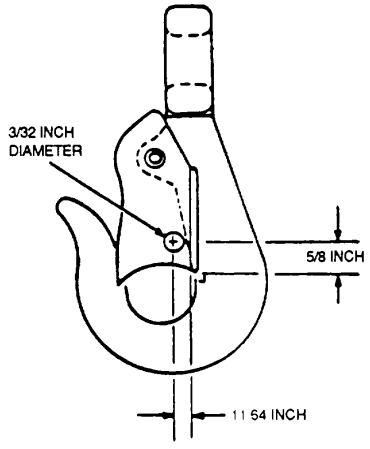

Figure 11-9. Snap Hook Safety Guard Drill Details

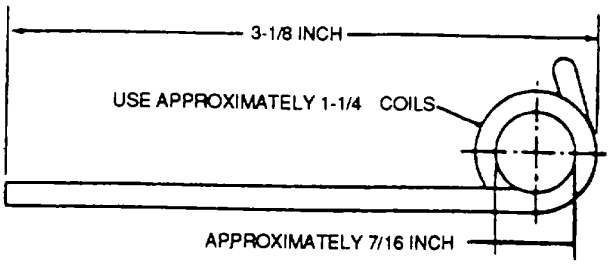

Figure 11-10. Snap Hook Safety Pin Construction Details

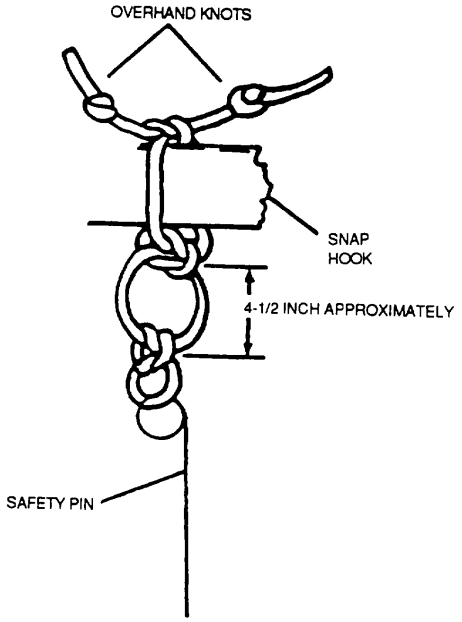

Figure 11-11. Safety Pin Retaining Cord Secured to Snap Hook

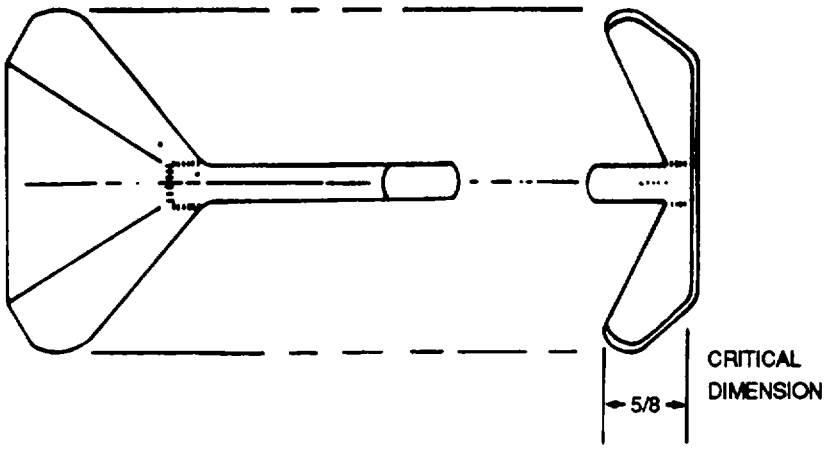

ORIGINAL SEAT BELT LATCH

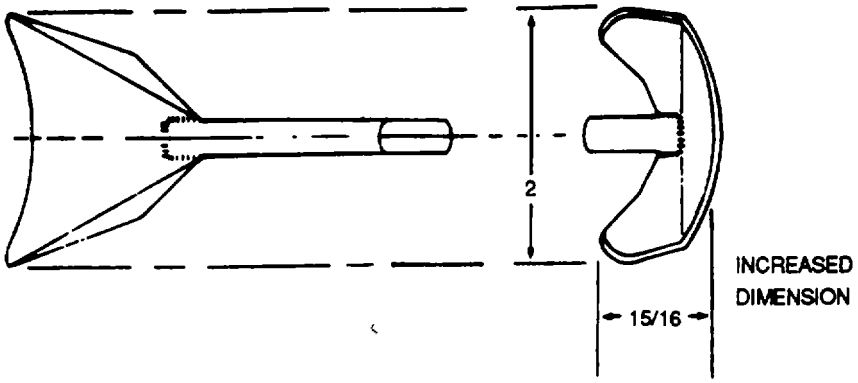

MODIFIED SEAT BELT LATCH

NOTE:
DIMENSIONS ARE IN INCHES

Figure 11-12. Seat Bet Latch Modification

NOTE

- **Aircrew members who perform flight duties away from home station or assigned unit will ensure that Individual emergency type parachutes and harnesses are inspected every 30 days by qualified parachute inspectors. However, if a situation occurs which precludes inspection due to a lack of qualified parachute inspection, personnel, parachutes and harnesses may continue to be used until arrival at a facility which can satisfy the inspection criteria, as soon as practical. In no case will the 30 day inspection requirement exceed 60 days.**
- **Unit commanders/aviation life support personnel will ensure that individual emergency type parachutes, i.e., seat, back, chest, or ejection seat type including drogue chutes and harnesses when separate from the parachute, I.E. chest harnesses and ejection seat harnesses, including seat belts, when integrated into the harness such as the MK-J5D parachute system, will be inspected every 30 days by an individual qualified to perform 30-day parachute inspections. These personnel will have been trained in parachute inspection methods by a qualified parachute rigger. This training will be documented in individual training folders and designated as parachute inspectors on unit orders by the aviation unit commander.**
- **Generic Description of Equipment**
  - **(1) Parachutes, personnel, emergency type: back, chest and seat types.**
  - **(2) Parachutes, personnel and drogue, ejection seat type.**
  - **(3) Harnesses, personnel parachute, used with above parachutes.**

b. *Inspection Procedures*. Inspection procedures for personnel parachute assemblies and the MK-J5 ejection seat personnel parachute harness are explained in the following paragraphs.

(1) Personnel parachute assemblies. Inspection procedures for emergency type personnel parachute assemblies including back, seat, and chest types are as follows:

(a) Remove DA Form 3912 from assembly log record and survival manual pocket. Check record for date of last pack. An emergency-type personnel parachute which has exceeded 120 days (200 days for MK-J5 ejection seat parachute) since the last pack will be considered unserviceable. Process for repack according to step j. After determining the last pack date, return the form to the log record and survival manual pocket.

NOTE

An emergency type chest parachute has two parachute log records. One log record is located on the parachute pack, and the other is found on the harness. Each of these log records shall be maintained. On an emergency type back parachute, the log record may be located either on the pack right wing flap or on the pack bottom stiffener panel.

(b) Ensure that a copy of TM 10-1670-1 is located in the log record and survival manual pocket. On a chest parachute assembly, the technical manual will be found in the pocket on the parachute harness.

(c) Without opening the pack, visually check external condition of pack and harness for defects or deterioration of webbing, canvas fabric, or stitching, and broken or loose tacking.

(d) Check metal components for cracks or rust. Check ripcord housing for dents or breaks.

(e) Inspect the two canopy release assemblies, if applicable, to ensure that each release is assembled and locked properly.

(f) Inspect ripcord grip pocket to ensure the ripcord grip is secure and the grip protrudes enough to allow immediate accessibility. Ensure that removal of ripcord is not obstructed by misplaced stitching or tacking and that harness chest strap on back parachute is not routed through ripcord grip.

(g) Ensure that each pack opening spring band is connected. Check the elasticity of each band.

(h) Open ripcord protector flap and inspect ripcord pins for proper seating in the pack release cones. Ensure that pins are not bent or corroded. On back of personnel parachute, each ripcord pin shall extend 3/4 inch beyond pack release cone (measuring from top of pin to eye of cone).

(i) On back personnel parachute, grasp harness webbing at a point on the lift web above the ripcord grip pocket. Pull against the weight of pack assembly to ensure the ripcord pins will not move from the prepositioned location given in (h) above.

(j) If after completing steps *(a)* thru (i) above, it is determined conditions exist which require repair, repack, or more extensive Inspection, prepare DD Form 1577-2 as shown in DA PAM 738-751. Attach form to the item. The item then shall be segregated from serviceable items by a physical barrier and evacuated to a parachute maintenance facility. An emergency type personnel parachute which is considered serviceable will have the inspection recorded as described in paragraph c, and the parachute will be returned to service.

(2) MK-J5 ejection seat personnel parachute harness. Inspection procedures for the MK-J5 ejection seat personnel parachute harness are as follows:

(a) Remove DA Form 3912 from harness log record and survival manual pocket located on inside lower right of harness stiffener. Check record for date of last 200 day MK-J5 ejection seat harness inspection. A parachute harness which has exceeded 120 days (200 days for MK-J5 ejection seat harness) since last technical rigger-type inspection, will be considered unserviceable. After determining the last inspection date, return the form to the log record and survival manual pocket.

(b) Ensure that a copy of TM 10-1670-1 is located in the log record and survival manual pocket.

(c) Visually examine harness webbing for cuts, frays, tears, broken or loose stitching, worn areas, discoloration, dampness, or evidence of contact with petroleum products.

(d) Check harness shoulder pads, chest strap ejector snap pads, and leg strap ejector snap pads for damage, broken or loose stitching, and broken or loose tacking. Ensure that tacking between each ejector snap and adjacent pad Is not broken or loose.

(e) Inspect strap fasteners, quick release adapters, connector links, ejector snaps and survival kit retention buckles for bends, breaks, and corrosion Check all moving metal components for ease of operation. Ensure that spring tension is maintained in each ejector snap.

(f) Check elastic webbing retainers for cuts, frays, tears, loose or broken stitching, and loss of elasticity.

NOTE

An MK-J5 ejection seat personnel parachute harness with any defects above will be considered unserviceable. Process for evacuation according to step (1) (j). A harness which is considered serviceable will have the inspection recorded as described in paragraph c, and the harness will be returned to service.

c. *Inspection Report* . Record and report inspection MK-J5 ejection seat personnel parachute harness on DA Form 2407 in accordance with DA PAM 738-751. Further inspection record will be made on the individual parachute harness DA Form 3912 as follows:

(1) Open DA Form 3912 to page, entitled jump inspection and repack data, for the routine inspection entry accomplishment.

(2) Enter inspection date In date column.

(3) Make checkmark in routine Inspection column.

(4) Repeat the number entered previously in the jumped or dropped columns.

(5) Enter signature in the inspector's name column.

(6) Enter designation of the unit to which inspector is assigned in the unit column.

NOTE

The 30-day routine inspection requires recording on DA Form 3912.

11-23. Consolidated List of ALSE References.
Table 11-11 gives a list of references to be used as a guide only. Do not maintain manuals that do not pertain to the units Life Support Equipment authorized and on hand. Department of the Army Pamphlet 25-30 should be consulted frequently for the latest changes or revisions of the references listed in table 11-11 and for new publications covered in this section. Instructions for establishing and maintaining a library are found in DA Pam 310-13.

Table 11-11. Consolidated List of ALSE References

Publication	Description
	Army Regulations (AR)
AR 25-400-2	The Modern Army Record Keeping Systems (Marks)
AR 32-15	Classification and Inspection
AR 40-5	Preventive Medicine
AR 40-8	Temporary Flying Restrictions Due to Exogenous Factors
AR 40-61	Medical Logistics Policies and Procedures
AR 40-501	Standards of Medical Fitness
AR 40-656	Veterinary Surveillance Inspection of Subsistence
AR 40- 657	Veterinary Medical Food Inspection and Laboratory Service
AR 40-660	DOD Hazardous Food and NON Prescription Drug Recall System
AR 95-1	Army Aviation Flight Regulations
AR 95-3	General Provisions; Training, Standardization and Resource Managements
AR 190-11	Physical Security of Arms, Ammunition, and Explosives
AR 310-70	Equipment Interservicing of Technical Manuals and Related Technology
AR 340-1	Records Management Program
AR 350-30	Code of Conduct/Survival, Evasion, Resistance, and Escape (SERE) Training
AR 385-32	Protective Clothing and Equipment
AR 385-64	Ammunition and Explosives Safety Standards
AR 385-95	Army Aviation Accident Prevention
AR 700-89	Identification, Control, and Utilization of Shelf Life Items
AR 710-1	Centralized Inventory Management of the Army Supply System
AR 710-2	Supply Policy Below the Wholesale Level
AR 725-50	Requisitioning, Receipt, and Issue System

Table 11-11. Consolidated List of ALSE References- CONT

Publication	Description
	Army Regulations (AR) - CONT
AR 750-1	Army Material Maintenance Policies
AR 750-32	Airdrop, Parachute Recovery and Aircraft Personnel Escape Systems
AR 755-1	Reporting, Utilization, and Redistribution of Installation USAMC, and Overseas Command Excess Property
AR 755-2	Disposal of Excess, Surplus, Foreign Excess, Captured and Unwanted Material
	Department of Defense Publications (DOD Pub)
DOD 4160.21-M	Defense Utilization and Disposal Manual
DOD 5154 4S	DOD Ammunition and Explosives Safety Standards
	Defense Logistics Agency
DLAM 4155 5	Quality Control Depot Serviceability Standards (Medical Supplies), Appendix M
Medical Catalog	Containing VOL I, VOL II, VOL III
	NOTE
	Department of Defense Customer Assistance Program call Autovon 284-7871. They will mail copies
FED STD 757	Stitches, Seams, and Stitching
	Technical Manual (TM)
TM 3-4230-216-10	Operator's Manual for Decontaminating Kit Skin: M25H1 and Training Aid, Skin Decontaminating M58A1
TM 3-4240-212-14&P	Operator's Organizational, Direct Support and General Support Maintenance Manual (Including Repair Parts and Special Tool List) Breathing Apparatus, Oxygen Generating, M20
TM 5-803-4	Planning of Army Aviation Facili ties
TM 5-4220-201-12	Operator's and Organizational, Maintenance, Life Preserver, Underarm, Parachutist (B-7)

Table 11-11. Consolidated List of ALSE References-- CONT

Publication	Description
	Technical Manual (TM) (Cont)
TM 5-4220-202-14	Maintenance Instructions with Parts Breakdown USAF Flotation Equipment (TO. 14S-1-102)
TM 9-1290-333-15	Operators, Organizational, Direct Support, General Support, and Depot Maintenance Manual (Including Repair Parts and Special Tools List) Compass Magnetic Unmounted M2
TM 9-1300-206	Ammunition and Explosives Standards
TM 9-1370-203-34&P	Direct Support and General Support Maintenance Manual (Including Repair Parts and Special Tools List) Military Pyrotechnics
TM 9-1370-206-10	Operator's Manual: Pyrotechnic Signals
TM 9-4940-461-15P	Operator's Organizational, DS, GS, and Depot Maintenance Repair Parts and Special Tools List for Separator Oil and Water, Spray Gun, Wall MTD
TM 10-1670-1	Survival and Emergency Use of the Parachutes (AFP 64-15)
TM 10-1670-250-20	Organizational Maintenance Manual (Including Repair Parts and Special Tools List). Parachute System Used w/Martin Baker MK-J5D Ejection Seat
TM 10-1670-213-10	Operator's Manual for Parachute Personnel, Types 28 Foot Diameter, Back, 28 Foot Diameter, Chest; NB-8 Back and Martin Baker Ejection Seat Harnesses
TM 10-1670-251-12	Operator's and Organizational Maintenance Manual (Including, Repair Parts and Special Tool List). Lowering Device, Cargo and Personnel, 500 LB Capacity
TM 10-1670-262-12	Operator's and Organizational Maintenance Manual (Including, Repair Parts and Special Tools List)' For Personnel Stabo Extractson System and Cargo and Personnel Lowering Anchor Device
TM 10-3530-202-24	Organizational and Field Maintenance Manual Sewing Machines for the Repair of Parachutes and Allied Equipment
TM 10-8400-201-23	Organizational and Direct Support Maintenance Manual General Repair Procedures for Clothing and Individual Equipment
TM 10-8415-206-12&P	Operator's and Organizational Maintenance Manual (Including Repair Parts and Special Tools List). For Helmet, Flyer's Protective, Model SPH-4 Regular and X-Tra Large

Table 11-11. Consolidated List of ALSE References -CONT

Publication	Description
	Technical Manual (TM) - CONT
TM 10-8475-200-13	Use, Inspection, Fitting, and Maintenance Instructions for Anti-Exposure Assembly, Type CWU-21/P or CWU-21A/P(TO 14P3-5-81)
TM 10-8475-202-13	Operation, Service and Maintenance Instructions for Quick Donning Anti-Exposure Flying Coveralls Assembly. Type CWU-16/P (T O 14P3-5-61)
TM 11-5820-640-15	Operator's Organizational, Direct Support, General Support, and Depot Maintenance Manual: Radio Sets, AN/URC-10A, AN/URC-10A, and ACR RT-10
TM 11-5820-767-12	Operator's and Organizational Maintenance Manual Including Repair Parts and Special Tools List, Radio Set, AN/URC-68
TM 11-5820-767-34	Direct Support and General Support Maintenance Manual Including Repair Parts and Special Tools List (Including Depot Maintenance Repair Parts and Special Tools) for Radio Set, AN/URC-68
TM 11-5820-800-13&P	Operator's and Organizational Maintenance Manual, (Including Repair Parts and Special Tools List) Radio Set AN/PRC-90
TM 11-5965-279-13P	Operator's Organizational and Direct Support Maintenance Repair Parts and Special Tools List for Headset-Microphone Kit MK-896/AIC for Helmet, Flyers Protective SPH-4
TM 11-5965-285-23	Organizational and DS Maintenance Manual (Including Repair Parts and Special Tools List) Headset Microphone 19LB-87
TM 11-6625-2631-14	Operator's Organizational, Direct Support and General Support Maintenance Manual Including Repair Parts and Special Tools List. Test Set, TS-2530/UR and TS-2530A/UR
TM 11-6625-2632-14	Operator's Organizational, Direct Support and General Support Maintenance Manual (Including Depot Maintenance Repair Parts and Special Tools) For Radio Set AN/PRM-32
TM 38-711-2	Standard Army Intermediate Level Supply Subsystem (SAILS) Procedures for Customers
TM 55-1660-247-12	Operation, Fitting, Inspection and Maintenance Instructions with Illustrated Parts Breakdown for MBU-12/P Pressure Demand Oxygen Mask
TM 55-1680-316-10	Operator's Manual for Rigid Seat Survival Kit and Survival Vest for OV-1 Aircraft

Table 11-11. Consolidated List of ALSE References - CONT

Publication	Description
	Technical Manual (TM) - CONT)
TM 55-1680-317-23P&P	Organizational and DS Maintenance Manual Including Repair Parts and Special Tools List for Army Aircraft Survival Kits
TM 55-4240-284-12&P	Operating and Maintenance Manual, Rescue Seat, Forest Penetrating Including Repair Parts and Special Tools List
TM 55-1680-248-10	Operator's Manual: Survival Kit, Cold Climate, Individual
TM 55-1680-249-10	Operator's Manual: Survival Kit, Hot Climate, Individual
TM 55-1680-350-10	Operator's Manual: Survival Kit, Overwater, Individual
TM 55-1680-351-10	Operator's Manual for SRU-21/P Army Vest, Large/Small
TM 55-1680-322-12	Operations and Service, Distress Marker, Light Part No. SDU-5/E
TM 750-244-1 -2	Procedures for the Destruction of Life Support Equipment to Prevent Enemy Use
TM 750-244-1-5	Procedures for Destruction of Aircraft and Associated Equipment to Prevent Enemy Use
	Field Manuals (FM)
FM 1-100	Combat Aviation Operations
FM 10-16	General Fabric Repair
FM 10-267	General Repair for Clothing and Textiles
FM 20-151	Aircraft Emergency Procedures Overwater
FM 21-15	Care and Use of Individual Clothing and Equipment
FM 21-76	Survival
FM 38-725-23	Logistic Codes NICP/Depot and DS/GS/Installation
	Technical Bulletins (TB)
TB CML 93	Adapter, Compressed Air Breathing Apparatus, M4 (End Item Code 201) and Detector Kit, Carbon Monoxide, Colormeter, M23
TB 9-1300-385	Munitions: Suspended or Restricted
FM 1-508	Maintaining Aviation Life Support Equipment (ALSE): Maintenance Program

Table 11-11. Consolidated List of ALSE References - CONT

Publication	Description
	Technical Bulletins (TB) - CONT
TB 34-9-127	Medical Gas Cylinders
TB 34-9-210	NATO Standardization Agreement for Air Pyrotechnics Interchangeability Chart STANG 3398
TB 34-9-242	Aircraft Gaseous Oxygen Replenishment Connections
TB 34-9-243	Aircraft Compressed Air Replenishment Connections
TB 34-9-245	Compressed Breathing Air Characteristics
TB 34-9-330	Mask, Protective, Aircraft, ABC-M24 and Hood Aircraft Protective Mask, ABC-M7
TB 43-0002-4	Maintenance Expenditure Limits for FSC Group 16, FSC Classes 1610, 1615, 1620, 1630, 1650, 1660, 1670, and 1680
TB 43-180	Calibration and Repair Requirements for the Maintenance of Army Material
TB 740-10	Quality Control Depot Serviceability Standards
	Supply Bulletins (SB)
SB 3-30-2	Chemical, Biological Canisters and Filter Elements Serviceability Lists
SB 8-75 SERIES	Army Medical Department Supply Information SB 8-75-1 through 8-75-35
SB 11-6	FSC Class 6135; Dry Battery Supply Data
SB 11-30	FSC Class 6135; Primary Battery Management Data
SB 11-576	Cold Weather Batteries for Radio Sets AN/PRC6,8,8A, 9A, 10, 10A, 25,28 and 77 and Cable Assemblies for Cold Weather Operation of Transmitting Set Radio AN/PRT-4 and Receiving Set, Radio AN/PRR-9
SB700-20	Army Adopted/Other Items Selected for Authorization/List of Reportable Items
SB708-30	Department of Defense Ammunition Code (Cataloging Handbook H3) (GSA-FSS-H-3)

Table 11-11. Consolidated List of ALSE References - CONT

Publication	Description
	Supply Bulletins (SB) - CONT
SB 708-6	Federal Item Directory for Supply Cataloging
SB 708-21	Federal Supply Classification; Part 1 -Groups and Classes (Cataloging Handbook H2-1)
SB 708-22	Federal Supply Classification; Part 2 Numeric Index of Classes (Cataloging Handbook H2-2) (GSA-FSS-H2-2)
SB708-41/SB 708-42	Federal Supply Code for Manufacturers; United States and Canada-Name to Code (Cataloging Handbook H4-1) (GSA-FSS-H4-1/H4-2)
SB 708-43	Cataloging Handbook H4/H8 Commercial and Government Entity (GAGE)
SB 742-1	Ammunition Surveillance Procedures
SB742-1370-94-721	Signal, Smoke and Illumination, Marine: AN-MK 13 MOD O Ammunition (DODAC 1370-L 275) Surveillance Procedures
	Supply Catalogs (SC)
SC5180-91-CL-R07	Tool Kit, Electronic Equipment, TK-105/G
SC5180-91-CL-R13	Tool Kit, Electronic Equipment, TK-101/G
	Department of the Army Supply Catalogs (Federal)
C 1 ARMY	Introduction to the Federal Supply Catalog and Related Publications
C 6500-AL	Federal Supply Catalog: Alphabetical Index (Medical Materiel)

Table 11-11. Consolidated List of ALSE References - CONT

Publication	Description
	Department of the Army Supply Catalogs (Federal) - CONT
C 6505-GL	FSC Glossary of Colloquial Names and Therapeutic Index (FSC Class 6505)
MCRL-1	Master Cross Reference List - 1, Cross Reference from Part Number to NSN
MCRL-2	Master Cross Reference List - 2, Cross Reference from NSN to Part Number
C 6700/9500-ML	Management Data List: FSC Groups 67 Thru 95 (Items of Medical Materiel Only)
C 8900-SL	Federal Supply Catalog: Stock List, FSC Group 89, Subsistence
	Department of the Army Pamphlets (PAM)
PAM 25-30	Consolidated Index of Army Publications and Blank Forms
PAM 310-10	The Standard Army Publications System (STARPUBS) User's Guide
PAM 310-13	Posting and Filing Publications
PAM 700-3	Why and How to Use SF 364 to Report Package Discrepancies
PAM 710-2-1	Using Unit Supply System Manual Procedures
PAM 738-751	Functional User's Guide to the Army Maintenance Management System-Aviation (TAMMS-A)
	Common Tables of Allowance (CTA)
CTA 8-100	Army Medical Department Expendable/Durable Items
CTA 50-900	Clothing and Individual Equipment
CTA 50-909	Field and Garrison Furnishings and Equipment
CTA 50-970	Expendable/Durable Items (Except: Medical, Class V, Repair Parts and Heraldic Items)

Table 11-11. Consolidated List of ALSE References - CONT

Publication	Description
	Air Force Technical Orders (TO)
TO: 0-1-01	Numerical Index
TO: 0-1-02	Numerical Index
TO: 00-5-1	Technical Order System
TO: 00-5-2	Technical Order Distribution System
TO: 00-35A-39	Instructions for Procurement, Issue, Use and Maintenance of Medical Kits
TO: 11A-1-1	Ammunition Restricted or Suspended
TO: 11A10-24-7	Storage and Maintenance Procedures, Pyrotechnics
TO 12R2-2PRC90-2	PRC-90 Survival Radio
TO 12R2-2PRC90-3	PRC-90 Survival Radio
TO 12R2-2PRC90-4	PRC-90 Survival Radio
TO 14S-1-102	Maintenance Instructions with Parts Breakdown USAF Flotation Equipment
TO: 14S1-4-1	Distillation Kit
TO: 14S10-2-2-SDU-5/E	Marker Distress Light
TO: 14S1-4-22	Desalting Kit
TO 15X1-1	Oxygen Equipment
TO: 15X1-4-2-4	Bail Out Bottles (Parts Manual)
TO: 15X1-4-2-12	Bail Cut Bottles (Maintenance Manual)
TO: 15X3-3-4-3	MB4 Diluter Demand
TO: 15X5-3-6-1	MBU-12/P Pressure-Demand Oxygen Mask Operation, Fitting, Inspection and Maintenance Instructions with Illustrated Parts Breakdown
TO: 15X5-4-1-101	Oxygen Mask Connector (CRU-60/P)

Table 11-11. Consolidated List of ALSE References - CONT

Publication	Description
	Naval Publications
	Department of the Army (DA) Forms
DA Form 12-R	Request for Establishment of a Publications Account
DA Form 12 Series	Requirements for DA Publications
DA Form 17	Requisition for Publications and Blank Forms
DA Form 17-1	Requisition for Publications and Blank Forms (Continuation Sheet)
DA Form 581	Request for Issue and Turn-In of Ammunication

Table 11-11. Consolidated List of ALSE References- CONT

Publication	Description
	Department of the Army (DA) Forms - CONT
DA Form 2028	Recommended Changes to Publications and Blank Forms
DA Form 2062	Hand Receipt/Annex Number
DA Form 2063-R	Prescribed Load List (LRA)
DA Form 2064	Document Register for Supply Actions
DA Form 2402	Exchange Tag
DA Form 2404	Equipment Inspection and Maintenance Worksheet
DA Form 2405	Maintenance Request Register
DA Form 2407	Maintenance Request
DA Form 2407-1	Maintenance Request - Continuation Sheet
DA Form 2408-21	Life Raft Inspection Record
DA Form 2408-22	Helmet and Oxygen Mask/Connector Inspection Record
DA Form 2408-23	Survival Radio/Emergency Locator Transmitter (ELT) Inspection Record
DA Form 2408-24	Survival Kit Inspection and Maintenance Record
DA Form 2408-25	Mesh Net Survival Vest Inspection Record
DA Form 2408-26	Life Preserver Inspection Record
DA Form 2408-27	Life Preserver Data
DA Form 2408-28	Oxygen Console Service Record
DA Form 2408-29	Anti-Exposure Coveralls Inspection Record
DA Form 2696-R	Operational Hazard Report
DA Form 2765-1	Request for Issue or Turn-In
DA Form 3161	Request for Issue or Turn-In
DA Form 3749	Equipment Receipt
DA Form 4569	USAPC Requisition Code Sheet

Table 11-11. Consolidated List of ALSE References - CONT

Publication	Description
	Department of Defense (DD) Forms - CONT
DD Form 173/1	Joint Message Form
DD Form 448	Military Interdepartmental Purchase Request
DD Form 1348	DOD Single Line Item Requisition System Document (MANUAL)
DD Form 1348-1	DOD Single Line Item Release/Receipt Document
DD Form 1348-6	DOD Single Line Item Requisition System Document (MANUAL-LINE FORM)
DD Form 1574	Serviceable Tag-Materiel
DD Form 1574-1	Serviceable Label-Materiel
DD Form 1575	Suspended Tag-Materiel
DD Form 1575-1	Suspended Label-Materiel
DD Form 1576	Test/Modification Tag-Materiel
DD Form 1576-1	Test/Modification Label-Materiel
DD Form 1577	Unserviceable (Condemned) Tag-Materiel
DD Form1577-1	Unserviceable (Condemned) Label-Materiel
DD Form 1577-2	Unserviceable (Repairable) Tag-Materiel
DD Form 1577-3	Unserviceable (Repairable) Label-Materiel
	Standard Forms (SF)
SF 364	Report of Discrepancy (ROD)
SF 368	Quality Deficiency Report (Category II)

CHAPTER 12

PYROTECHNICS

12-1. General. The following paragraphs explain pyrotechnics used on Army aircraft. Refer to TM 9-1377200-20&P for descriptive information, care and handling of stock class 1377 cartridges.

WARNING

Electrically activated cartridges shall be protectively wrapped in aluminum foil or electrically shunted whenever removed from the aircraft installation to preclude "STRAY" electrical voltage activation and resulting personal injury.

12-2. Ejection Seats. Ejection seats use pyrotechnics for seat ejection, automatic parachute deployment, and separation of seat from occupant after ejection.

WARNING

Electrically activated cartridges shall be protectively wrapped in aluminum foil or electrically shunted whenever removed from the aircraft installation to preclude "STRAY" electrical voltage activation and resulting personal injury.

12-3. Fire Bottle Cartridges. Fire bottles use cartridges to discharge extinguishing agents when activated by aircraft crewmember or automatic detecting device.

12-4. External Stores Cartridges. External stores cartridges are used to release external stores from racks

CAUTION

Do not use damaged cartridges. Damaged cartridges may function erratically and cause damage to equipment.

NOTE

- **Shelf life (storage life) for the cartridge is established at 8 years, beginning from date of manufacture stamped on cartridge or on hermetically sealed metal container, of which not more than 12 months shall have elapsed after opening container. Cartridges are overage if either of these time limits is exceeded. When a container is opened, the service life expiration date (month and year) shall be marked with indelible ink on the side of the cartridge.**

- **Cartridge is considered unserviceable after ten insertions and removals from ejector rack, or after the expiration date marked on the side of the cartridge. Each time a cartridge is removed, place a radial mark on the base of cartridge with indelible ink. Monitor service life by record of inked markings and expiration date.**

WARNING

Electrically activated cartridges shall be protectively wrapped in aluminum foil or electrically shunted whenever removed from the aircraft installation to preclude "STRAY" electrical voltage activation and resulting personal injury.

12-5. Cable Cutter Cartridges . The cargo hoist cable cutter is a mechanical cable shearing device mounted on the hoist cable guide. It is actuated by an electrically fired cartridge. When the pilot throws the CABLE SHEAR switch or the aft pilot throws the HOIST CABLE SHEAR switch, electrical power, supplied by the 28 vdc primary bus through the HOIST CABLE SHEAR circuit breaker on the overhead circuit breaker panel, fires the cartridge, actuating the cable cutter, and shearing the cable. After firing, the cable cutter assembly must be replaced.

12-6. Pyrotechnic Pistols. The pyrotechnic pistol fires devices such as flares. The following procedures are for the maintenance of these pistols:

a. Clean and oil pistol thoroughly after firing, using lightweight preservative lubricating oil, MIL-L-7870. Also, perform this maintenance function at regular inspection intervals as prescribed in aircraft organizational maintenance manual.

b. Daily maintenance is required under dusty, wet, or salt. air conditions.

12-7. Pyrotechnics Storage and Handling. Existing safety requirements and precautions shall be complied with by all personnel handling pyrotechnic signal flares. This type pyrotechnic is hazardous due to the nature of its explosive, flammable, or toxic filler. The following precautions in handling. signals and flares used in pyrotechnic pistols will be followed in order to prevent personal injuries.

a. Store flares and signals in a dry, well-ventilated place, out of direct rays of sun and protected against excessive or variable temperatures.

b. Post NO SMOKING signs in storage area.

WARNING

Handle pyrotechnic flares with the same care as high explosives. Personnel injury may result from improperly handled flares.

c. Protect flares and signals from moisture.

NOTE

Open all containers which show signs of dampness or moisture. Destroy contents when there is evidence of moisture.

d. Disassembly of flares is strictly prohibited.

e. Do not use flares when dented or deformed.

f. Avoid any rough handling, throwing, or dropping of pyrotechnics.

g. Remove flares and signals from aircraft that are parked in maintenance or storage hangars, and from survival kits placed in storage.

CHAPTER 13
AIRCRAFT CLEANING

13-1. GENERAL. Proper and frequent cleaning is the most important part of a corrosion control program. Frequency of cleaning and related treatment will depend on type of aircraft and local conditions. All aircraft shall be washed and cleaned every 30 days, unless aircraft are stationed within two miles of salt water. Extended or low level operations over salt water require daily fresh water rising. External corrosion prone areas will require more frequent cleaning.

WARNING

Do not use synthetic wiping cloths with highly .ammable solvents having a .ash point of 100°F (37.8°C) or less, such as aliphatic naphtha TT-N-95. Static electricity may build up and cause ignition.

CAUTION

DELETED

NOTE

Use only authorized cleaning materials and equipment.

13-2. CLEANING PRACTICES AND PROCEDURES. The following paragraphs explain preparation for cleaning, cleaning methods, cleaning of corrosion prone areas, and post-cleaning.

a. Preparation for Cleaning. Prepare aircraft for cleaning by accomplishing the following procedures:

CAUTION

Make sure that static vents are not fouled by tape adhesive transfer. Cover static vents with a properly sized disc of suitable material, then apply masking tape. Fouled vents will give wrong readings.

(1) Prior to lubricating any components or parts, remove all foreign matter from joints, .ttings, and bearing surfaces. Cleaning cloth CCC-C-46 shall be used for this purpose. Clean up all spilled or excess oil or grease. Some solvents can damage rubber, neoprene, and electrical insulation. They can also damage paint and should be removed as soon as possible.

(2) To protect against cleaning solution entrapment, inspect all lubrication points that have exposure type lubrication .ttings. Lubricate those that have not been regularly lubricated in accordance with the applicable maintenance manual.

(3) Close all doors and emergency openings.

(4) Make sure that all drain holes are clear by inserting a probe such as a pipe cleaner, except where pressurized .apper valves are located.

WARNING

Cleaning Compound, MIL-PRF-85570, Type II, can irritate eyes, skin, and respiratory tract. Wear protective gloves and goggles. Avoid repeated or prolonged contact. Use in well ventilated areas.

b. Cleaning Methods. Various cleaning methods are explained in the following paragraphs. The method used depends upon the availability of tap water.

(1) Waterless wipedown. Waterless wipedown procedures will be used when water is not available for rinsing or when cold weather prevents the use of water. The preferred waterless wipedown method for removing soils and corrosive salt residues is accomplished using the following procedures.

WARNING

Open all circuit breakers associated with battery power prior to application of MIL-C-43616 leaning compound. This compound is flammable.

DELETED

(a) Spray the exterior surfaces of the aircraft with water emulsion cleaning compound MIL-PRF-85570.

(b) When the foam begins to break, wipe cleaner and soil from the surface.

(c) Rinsing with a cloth wet with fresh water following the use of MIL-C-43616 is desirable.

(d) Rinse the cleaned surface with fresh water when water becomes available.

(2) Detergent cleaning with limited water. When limited water is available, the following no rinse procedures may be used:

WARNING

Open all circuit breakers associated with battery power prior to application of MIL-C-43616 leaning compound. This compound is flammable.

DELETED

(a) Mix one part of aircraft cleaning compound MIL-C-43616 or MIL-C-25769 and nine parts of water in a bucket.

(b) Apply the cleaner with a scrub brush, sponge, rag, or cleaning and polishing pad. Apply to one small area at a time.

(c) Scrub the area and remove the cleaner and loosened soil with a cloth.

NOTE

For soils that are resistant to the limited water procedure, clean again with a mixture of one part cleaner in four parts water.

(d) Apply MIL-PRF-81309 Type II and wipe with a clean dry cloth.

(3) Water detergent cleaning (preferred method). Where water of suitable quality is available for rinsing purposes, the following procedures shall be used:

WARNING

Open all circuit breakers associated with battery power prior to application of MIL-C-43616 leaning compound. This compound is flammable.

DELETED

(a) Mix one part of aircraft cleaner MIL-PRF-85570 or MIL-PRF-87937 with nine parts water.

(b) Apply the mixture using foaming equipment with aircraft washing kit or fiber brush.

(c) To prevent streaking, start at the lower surfaces, working upward and out. Scrub the surface with the washing kit or fiber brush.

CAUTION

Do not rinse aircraft with a solid stream of water. Use a soft, spray pattern to avoid damaging fragile sections or causing water intrusion.

(d) Rinse away the loosened soil and cleaner with a stream of water. For rinsing, a rubber padded shutoff-spray nozzle is recommended.

(4) Rinsing. Rinse the cleaner and loosened soil from aircraft surface with pressure equipment having a fan spray nozzle. Direct water at an angle between 15 and 30 degrees from the surface to rinse it. Continue rinsing until all evidence of cleaner and soils have been removed from aircraft.

(5) Deluge rinsing. To prevent buildup of salt deposits, the deluge rinse facilities shall be used as frequently as possible.

NOTE

Use of deluge rinsing facilities does not replace aircraft washing requirements.

c. Cleaning of Corrosion Prone Areas. Specific efforts shall be made to clean all corrosion prone areas as frequently as possible, even if unusual conditions prevent complete aircraft cleaning. Refer to the applicable maintenance manual.

d. Post-Cleaning. Corrosion prevention depends on carrying out the prescribed preservation and lubrication procedures. Strict compliance with the following procedures is essential Post-cleaning procedures shall be done in the following order:

(1) Remove covers from all static vents, pilot tubes, air ducts, heater ducts, etc. Tape shall be removed from all other openings sealed with masking tape.

(2) Clean all drain holes by inserting a probe such as a pipe cleaner except where pressurized flapper valves are located. Assure that all areas accumulating water have been drained. Whenever this is recurring problem, procedures shall be developed and implemented to remove entrapped water and prevent accumulation.

(3) Inspect for corrosion and deterioration as part of routine maintenance procedures.

(4) Relubricate, preserve, and seal.

(5) Polish and wax.

13-3. Cleaning Safety. All cleaning procedures should be accomplished with the applicable maintenance manual. Proper precautions must be taken when working with cleaning substances.

NOTE

The use of cleaning agents with high alkaline content should not be used. Failure to comply with this note will cause components and assemblies to corrode at an accelerated rate. At no time should cleaners high in alkaline be used in areas that have parts made of magnesium or aluminum or other areas not protected by a corrosion protective coating.

APPENDIX A
REFERENCES

AFM 64-5	
ANA Bulletin 166	
AR 25-400-2	The Modern Army Record Keeping Systems (Marks)
AR 32-15	Classification and Inspection
AR 40-5	Preventive Medicine
AR 40-8	Temporary Flying Restrictions Due to Exogenous Factors
AR 40-61	Medical Logistics Policies and Procedures
AR 40-501	Standards of Medical Fitness
AR 40-656	Veterinary Surveillance Inspection of Subsistence
AR 40-657	Veterinary Medical Food Inspection and Laboratory Service
AR 40-660	DOD Hazardous Food and NON Prescription Drug Recall System
AR 95-1	Army Aviation: Flight Regulations
AR 95-3	General Provisions; Training, Standardization and Resource Management
AR 190-11	Physical Security of Arms, Ammunition, and Explosives
AR 310-70	Equipment Interservicing of Technical Manuals and Related Technology
AR 340-1	Records Management Program
AR 350-30	Code of Conduct/Survival, Evasion, Resistance, and Escape (SERE) Training
AR 385-10	The Army Safety Program
AR 385-30	Safety Color Code Markings and Signs
AR 385-32	Protective Clothing and Equipment
AR 385-64	Ammunition and Explosives Safety Standards
AR 385-95	Army Aviation Accident Prevention
AR 700-89	Identification, Control, and Utilization of Shelf Life Items
AR 710-1	Centralized Inventory Management of the Army Supply System
AR 710-2	Supply Policy Below the Wholesale Level
AR 725-50	Requisitioning, Receipt, and Issue System
AR 746-1	Packing of Army Materiel for Shipment and Storage
AR 750-1	Army Material Maintenance Policies
AR 750-5	Army Materiel Maintenance Policies
AR 750-23	Engine Operating Time Limits
AR 750-32	Airdrop, Parachute Recovery and Aircraft Personnel Escape Systems
AR 755-1	Reporting, Utilization, and Redistribution of Installation USAMC, and Overseas Command Excess Property
AR 755-2	Disposal of Excess, Surplus, Foreign Excess, Captured and Unwanted Material
C 1 ARMY	Introduction to the Federal Supply Catalog and Related Publications
C 6500-AL	Federal Supply Catalog: Alphabetical Index (Medical Materiel)

APPENDIX A - CONT
REFERENCES

C 6505-GL	FSC Glossary of Colloquial Names and Therapeutic Index (FSC Class 6505)
C 6545-IL-VOL 2	Federal Supply, Catalog: Identification List, FSC 6545, Medical Sets, Kits and Outfits
C 6700/9500-ML	Management Data List: FSC Groups 67 Thru 95 (Items of Medical Materiel Only)
C 8900-SL	Federal Supply Catalog: Stock List, FSC Group 89, Subsistence
CTA 8-100	Army Medical Department Expendable/Durable Items
CTA 50-900	Clothing and Individual Equipment
CTA 50-909	Field and Garrison Furnishings and Equipment
CTA 50-970	Expendable/Durable Items (Except: Medical, Class V, Repair Parts and Heraldic Items)
DA FORM 12-R	Request for Establishment of a Publications Account
DA FORM 12 SERIES	Requirements for DA Publications
DAFORM 17	Requisition for Publications and Blank Forms
DA FORM 17-1	Requisition for Publications and Blank Forms (Continuation Sheet)
DA FORM 581	Request for Issue and Turn-In of Ammunication
DA FORM 2028	Recommended Changes to Publications and Blank Forms
DA FORM 2062	Hand Receipt/Annex Number
DA FORM 2063-R	Prescribed Load List (LRA)
DA FORM 2064	Document Register for Supply Actions
DA FORM 2402	Exchange Tag
DA FORM 2404	Equipment Inspection and Maintenance Worksheet
DA FORM 2405	Maintenance Request Register
DA FORM 2407	Maintenance Request
DA FORM 2407-1	Maintenance Request - Continuation Sheet
DA Form 2408	
DA Form 2408-1-E	
DA Form 2408-13-1 DA Form 2408-13-1	
DA FORM 2408-1-13-1-E	
DA Form 2408-5	
DA Form 2408-13	
DA FORM 2408-13-1 DA FORM 2408-13-1	
DA Form 2408-16	
DA Form 2408-18	
DA FORM 2408-21	Life Raft Inspection Record
DA FORM 2408-22	Helmet and Oxygen Mask/Connector Inspection Record
DA FORM 2408-23	Survival Radio/Emergency Locator Transmitter (ELT) Inspection Record
DA FORM 2408-24	Survival Kit Inspection and Maintenance Record
DA FORM 2408-25	Mesh Net Survival Vest Inspection Record
DA FORM 2408-26	Life Preserver Inspection Record
DA FORM 2408-27	Life Preserver Data

GLOSSARY

ATOMIZATION -	The process of changing liquid particles to a fine spray.
BONDING -	Two or more layers held together by adhesive.
DATUM -	A reference used as a basis for calculating or measuring.
DESICCANT -	A drying agent that absorbs moisture.
FOD -	Foreign Object Damage.
GROUNDING -	Electrically connecting an object with the earth.
HYPOXIA-	A deficiency of oxygen reaching the tissues of the body.
OHM -	A measurement of electrical resistance.
PHENOLIC -	A cotton fabric filled with a phenolc resin to form a hard material.
SERVING -	The process of winding wire tightly around cable for protection.
SPECIFIC GRAVITY -	Ratio of solid or liquid density compared to pure water.
VAPORIZATION -	The process of converting a liquid into a vapor.
VISCOSITY -	A fluid's Internal resistance to flow.

INDEX

VOLUME 1

Subject	Paragraph Figure, Table Number
A	
Accessories	7-4h
Accessory Section	8-5h
Additional Metal Particles Test	7-5g
Adhesive Operations	2-2k, 2-3k
Adhesives, Resins, and Solvents for Repair of Armor	9-23c
Adjusting Mixture and Idle Speed	7-9c
Adjustment of Windshield Wiper System	9-19b
Administration	11-2
Administration Area	11-6
Air Induction System	7-7
Inspection, Maintenance, Cleaning, and Replacement	7-7a
Turbocharger and Supercharger Maintenance	7-7b
Aircraft and Equipment, Parking of, in Hangars	2-6
Aircraft Cleaning, General	13-1
Aircraft Component, Preservation and Packing	4-12
Aircraft Grounding Receptacle Installation	F3-2
Aircraft, Liferafts	T11-4
Aircraft Litters	9-21
Installation	9-21a
Removal	9-21b
Aircraft Preparation for Storage	4-4
Aircraft Refueling	3-5
Fuel Truck Operations	3-5d
Open-Port Hot Refueling	3-5b
Open-Port Refueling	3-5a
Rapid Hot Refueling	3-5c
Aircraft Removal from Storage	4-9
Aircraft Seats	9-20
Metal Seats	9-20b
Polyester Fabric Seat Covers (UH-60)	9-20e
Raschel Knit Seat Covers	9-20d
Troop Seats	9-20a
Upholstered Seats	9-20c
Aircraft, Shipment	4-11
Aircraft, Static Grounding of	3-4
Aircraft Storage and Shipment, General	4-1
Aircraft Storage and Shipment, Responsibility	4-3
Airframe Maintenance, General	9-1
Airplane, First Aid Kit (Older Configuration)	F11-1
Alignment, Landing Gear	9-6
Anti-Icing, Deicing, and Defrosting	10-2d
Application and Installation of Identification Tapes	6-3
Application and Removal of Decals, General	6-1
Application of Identification Tapes	6-3c

INDEX - CONT

VOLUME 1

Subject — **Paragraph Figure, Table Number**

A - Continued

Approach Route, Fuel Truck F3-3
Arctic-Type Mooring F10-2
Armor Plating 9-23
  Adhesives, Resins, and Solvents for Repair of Armor 9-23c
  Armor Plating Inspection and Repair Definitions 9-23a
  General Inspection of Armor Plating 9-23b
  Repair of Armor Plating 9-23d
Armor Plating Definitions T9-8
Armor Plating Inspection and Repair Definitions 9-23a
Arctic Maintenance 10-2
  Anti-Icing, Deicing, and Defrosting 10-2d
  Precautions 10-2a
  Preflight 10-2c
  Preheating 10-2b
  Prevention and Removal of Snow, Ice, and Frost Deposits 10-2e
Preventive Maintenance 10-2f
Arctic, Desert, and Tropic Maintenance, General 10-1
Assemblies, Connecting Rod F7-9
Assemblies, Elastic Shock Cords 9-26
Assembly, Cylinder F7-11
Assembly, Turbine, Elements F8-10
Aviation Life Support Maintenance, General 11-1
Axial Flow Compressor, Rotor and Stator Components of F8-7
Axial-Flow Engine F8-2

B

Backing Approach, Fuel Truck F3-5
Balance (of Tires and Tubes) 9-9c
Balancing Equipment 2-2l, 2-3l
Basic Mechanical Failure 7-5k
Basis of Issue, First Aid Kits 11-19a
Bearing Types F7-8
Bearings 7-4c
Bleeding Brakes 9-7i
Booster Coil F7-20
Brake Assemblies 9-7b
Brake Assembly Adjustment 9-7g
Brake Assembly Cleaning 9-7c
Brake Assembly Inspection 9-7d
Brake Assembly Servicing 9-7h
Brake System Safety 9-7j

INDEX - CONT

VOLUME 1

Subject — **Paragraph Figure, Table Number**

B - Continued

Brake Systems 9-7
- Bleeding Brakes 9-7i
- Brake Assemblies 9-7b
- Brake Assembly Adjustment 9-7g
- Brake Assembly Cleaning 9-7c
- Brake Assembly Inspection 9-7d
- Brake Assembly Servicing 9-7h
- Brake System Safety 9-7j
- Brake Types 9-7a
- Corrosion Treatment of Brake Assemblies 9-7e
- Repair and Replacement of Brake Assembly Components 9-7f

Brake Types 9-7a
Built-in Timing Marks F7-17

C

Cable Cutter Cartridges 12-5
Cable Damage Limits T9-3
Cable Test T9-5
Can-Annular Combustion Chamber Components and Arrangement F8-9
Can-Type Combustion Chamber Arrangement F8-8
Can-Type Combustion Chamber F8-9
Carbon Monoxide Detection 3-12c
Carburetion and Fuel Injection 7-9
- Adjusting Idle Mixture and Idles Speed 7-9c
- Depreservation 7-9b
- Inspection 7-9a
- Installation 7-9f
- Preservation 7-9e
- Repair or Replacement 7-9d

Cargo Tiedown Equipment 9-24
Cartridges, Cable Cutter 12-5
Cartridges, External Storage 12-4
Cartridges, Fire Bottle 12-3
Categories of Storage 4-2
- Flyable Storage 4-2a
- Intermediate Storage 4-2c
- Long Term Storage 4-2d
- Short Term Storage 4-2b

Centrifugal-Flow Compressor Components F8-6
Centrifugal-Flow Engine F8-1

INDEX - CONT

VOLUME 1

Subject — **Paragraph Figure, Table Number**

C - Continued

Chain Hoists 2-3e
Checking Propeller Shaft Runout F7-21
Cleaning, Flight Clothing 11-14c
Cleaning, Flotation Equipment 11-16e
Cleaning Methods 13-2b
Cleaning, Nuclear, Biological, and Chemical Equipment 11-20c
Cleaning of Corrosion Prone Areas 13-2c
Cleaning, Oxygen Equipment 11-17c
Cleaning Practices and Procedures 13-2
  Cleaning Methods 13-2b
  Cleaning of Corrosion Prone Areas 13-2c
  Post-Cleaning 13-2d
  Preparation for Cleaning 13-2a
Cleaning, Restraint Equipment 11-21c
Cleaning Safety 13-3
Cleaning, Signaling Devices 11-18c
Cleaning, Survival Kits 11-15c
Cleaning, Tires and Tubes 9-9a
Clothing, Flight 11-14
Cockpit Check Sheet, Engine Conditioning F7-23
Coding, Color (Elastic Shock Cords) T9-8
Coil, Booster F7-20
Cold Section Maintenance 8-6g
Color Band, Solid, System F6-2
Color Coding (Elastic Shock Cords) T9-8
Color-Coded Tapes F6-1
Combustion Chamber, Can-Type F8-9
Combustion Chamber, Can-Type, Arrangement F8-8
Combustion Section 8-5e
Complete Engine Conditioning 7-6a
Component Replacement Criteria 8-7b
Components and Airflow of a Double-Annular Chamber F8-10
Components and Arrangement, Can-Annular Combustion Chamber F8-11
Components, Fabrication (for Cables) T9-2
Components, First Aid Kits T11-8
Compressed Air and Water Outlets 2-2f
Compressed Air Panels 2-3f
Compressor Blade Damage F8-17
Compressor Blade Inspection and Repair 8-6h
Compressor Blade Repair Limits, Typical F8-18
Compressor Cleaning 8-6f

INDEX - CONT

VOLUME 1

Subject — **Paragraph Figure, Table Number**

C - Continued

Compressor Section 8-5c
Compressor, Centrifugal-Flow, Components F8-6
Conditioning, Engine 7-6, T7-2
Connecting Rod Assemblies F7-9
Connecting Rods 7-4d
Consolidated List of ALSE References 11-23, T11-11
Construction of Hard Stands F10-3
Consumable Materials 1-3
Consumption, Oil, Chart F7-22
Control Cables 9-12e
Control System Components 9-12f
Control Systems, Environmental 9-13
Control, Speed-Sensitive F8-13
Controlled Substances, First Aid Kits 11-19e
Controls, Flight 9-12
Corrosion Preventive Mixture, Discharge Nozzle for F7-24
Corrosion Treatment of Brake Assemblies 9-7e
Covers, Protective 9-22
Crankcase Opposed-Type F7-4
Crankcase, Radial-Typpe F7-5
Crankcases 7-4a
Crankshaft, Opposed-Type (Six-Cylinder) (Six-Throw) F7-6
Crankshaft, Radial-Type (Single-Throw) F7-7
Crankshafts 7-4b
Criteria, Fitting Area 11-10
Criteria, Storage Area 11-9
Cntena, Work Area 11-8
Cylinder Assembly F7-11
Cylinder, Marking of F7-12
Cylinders 7-4f

D

Damage Limits, Cable T9-1
Damage, Compressor Blade F8-17
Decal Types 6-2
  Metal Decals 6-2c
  Paper Decals 6-2a
  Vinyl Film Decals 6-2b
Defects of Turbine Engines, Marking of 8-8
Definitions, Armor Plating T9-6
Deicing System Maintenance 9-14d

INDEX - CONT

VOLUME 1

Subject — **Paragraph Figure, Table Number**

D - Continued

Deicing System Precautions 9-14a
Deicing System Preventive Maintenance 9-14b
Deicing System Troubleshooting 9-14c
Deicing Systems 9-14
  Deicing System Maintenance 9-14d
  Deicing System Precautions 9-14a
  Deicing System Preventive Maintenance 9-14b
  Deicing System Troubleshooting 9-14c
Depreservation 4-9a
Depreservation of Installed Reciprocating Engines, Supplemental Instructions 4-10
Depreservation (of Carburetors) 7-9b
Depreservation of Reciprocating Engines 7-13
  Depreservation Run 7-13b
  Preoiling 7-13a
Depreservation Run 7-13b
Desert Maintenance 10-3
  Deterioration Factors 10-3a
  Inspection and Maintenance 10-3c
  Precautions 10-3b
  Preventive Maintenance 10-3d
Design and Construction, Turbine Engine 8-5
Designation Examples 8-2b
Designation Examples (Reciprocating Engines) 7-2b
Details, Snap Hook Safety Guard Drill F11-9
Details, Snap Hook Safety Pin Construction F11-10
Detection and Extinguishing Systems, Fire 9-15
Deterioration Factors 10-3a
Devices, Signaling 11-18
Diffuser Section 8-5d
Discharge Pressure Pickup Line, Turbine F8-21
Disconnect, Electrical F8-22
Disconnect, Fuel Line F8-23
Disconnect, Power Level F8-24
Divided Entrance Inlet Duct (Centrifugal-Flow Engine) F8-4
Double-Annular Chamber, Components and Airflow of a F8-10
Duplex Fuel Nozzle F8-18
Dust and Dirt Control 2-2i, 2-3i

INDEX - CONT

VOLUME 1

Subject — **Paragraph Figure, Table Number**

E

Earth Ground Testing 3-4c
Earth Grounds 3-4b
Ejection Seats 12-2
Elastic Shock Cord Assemblies 9-26
- Fabncation Procedures 9-26d
- Fabrication Requirements 9-26b
- Identification 9-26c
- Inspection and Testing 9-26a
- Process Control 9-26f
- Serving Elastic Shock Cord 9-26e
- Storage of Elastic Shock Cords 9-26g

Electrical Disconnect F8-20
Electncal Hoist System 9-16b
Electncal Safety 2-5a
Electrical Utilities 2-2g, 2-3g
Emergency Evacuation of Aircraft from Hangar 2-6i
Emergency Extension Systems 9-3b
Engine Components, Major (Reciprocating Engines) 7-4
Engine Conditioning 7-6, T7-2
- Complete Engine Conditioning 7-6a
- Minor Engine Conditioning 7-6b

Engine Conditioning Cockpit Check Sheet F7-23
Engine Mounting Systems 7-11
Engine Operation 3-10
- Reciprocating Engines 3-10b
- Safety Procedures 3-10a
- Turbine Engines 3-10c

Engine Overspeed 7-5l
Engine Removal Criteria (Reciprocating Engine) 7-5
- Additional Metal Particles Test 7-5g
- Basic Mechanical Failure 7-5k
- Engine Overspeed 7-5l
- Excessive Maintenance 7-5n
- Excessive Manifold Pressure 7-5m
- Excessive Oil Consumption 7-5o
- Excessive Spark Plug Copper or Silver Runout 7-5h
- Expiration of Operating Time Limit 7-5a
- Identification of Metal Particles 7-5e
- Low Cylinder Compression 7-5i
- Metal Particles in Oil 7-5d
- Parts Failure 7-5j
- Significance of Metal Particles 7-5f

INDEX - CONT

VOLUME 1

Subject — **Paragraph Figure, Table Number**

E - Continued

Sudden Engine Stoppage 7-5b
Sudden Reduction In Engine RPM..... 7-5c
Engine Replacement Criteria 8-7a
Engine Types and Designations..... 7-2, 8-2
Designation Examples 7-2b, 8-2b
Types 7-2a, 8-2a
Engine, Axial-Flow F8-2
Engine, Centrifugal-Flow..... F8-1
Engine, Opposed-Type F7-2
Engine, Turbine, Theory..... 8-3
Engines and Components, Replacement Criteria for 8-7
Entries in Aircraft Forms..... 4-7
Entries, Method of Accomplishing 5-4
Environmental Control 2-2m
Environmental Control Systems 9-13
Repair of Flexible Air Ducts 9-13b
Types 9-13a
Equipment, Flotation 11-16
Equipment Maintenance Forms..... 2-4d
Equipment Mounted In Mobile Shelters..... 2-3c
Equipment, Nuclear, Biological, and Chemical 11-20
Equipment, Oxygen 11-17
Equipment, Restraint 11-21
Equipment, Test..... T11-1
Equipment, Training 11-12
Excessive Maintenance..... 7-5n
Excessive Manifold Pressure 7-5m
Excessive Oil Consumption..... 7-5o
Excessive Spark Plug Copper or Silver Runout..... 7-5h
Exhaust Section 8-5g
Exhaust System 7-8
Expiration of Operating Time Limit 7-5a
External Storage Cartridges 12-4

F

Fabncation Components (for Cables)..... T9-2
Fabrication of Ground Cable 3-4d
Fabrication of Static Grounding Cable Assembly..... F3-1
Fabrication Procedures 9-26d
Fabrication Requirements (Elastic Shock Cords)..... 9-26b

INDEX

VOLUME 1

Subject	Paragraph, Figure, Table Number
F - Continued	
Fingertip Clearance, Measuring	11-6
Fire Bottle Cartridges	12-3
Fire Detection and Extinguishing Systems	9-15
Fire Detection Systems	9-15a
Fire Extinguishing Systems	9-15g
Maintenance of Fire Detection Systems	9-15c
Maintenance of Fire Extinguishing Systems	9-15h
Repair or Replacement of Fire Detection Components	9-15e
Testing of Fire Detection System	9-15f
Troubleshooting of Fire Detection Systems	9-15d
Types of Fire Detection Systems	9-15b
Fire Detection Systems	9-15a
Fire Detection Systems, Troubleshooting of	T9-5
Fire Extinguisher Nameplates	F2-3
Fire Extinguishing Systems	9-15g
FireSafety	2-5c
First Aid Kit Components	T11-8
First Aid Kit, Airplane (Older Configuration)	F11-1
First Aid Kit, General Purpose (Newer Configuration)	F11-2
First Aid Kit, References	T11-9
First Aid Kits	11-19
Basic of Issue	11-19a
Controlled Substances	11-19e
First Aid Kit Components	11-19i
Identification	11-19c
Inspection	11-19f
Inspection Training Procedures	11-19j
Installation	11-19b
Protection of Contents	11-19d
Replacement of Components	11-19h
Sealing..	11-19g
Fitting Area Criteria	11-10
Flammable Materials	2-3n
Flat-Head Pin, Lead Seal, and Identification Tag, Properly Attached	F11-5
Flight Clothing	11-14
Cleaning	11-14c
Inspection	11-14a
Repair	11-14b
Flight Clothing References	T11-2
Flight Control Operating Systems.	9-12d
Flight Controls	9-12
Fire Extinguisher	2.5C(5)F2-3

INDEX- CONT

VOLUME 1

Subject	Paragraph, Figure, Table Number
F - Continued	
Flightline Equipment	3-2g
Flightline Operations General	3-1
Flightline Safety	3-2
Flightline Equipment	3-2g
Foreign Object Damage	3-2b
Hearing Protection	3-2a
Parking and Mooring	3-2e
Preparation of Aircraft for Storms	3-2f
Reflectorizing of Equipment	3-2h
Safety Around Airplanes	3-2d
Safety Around Helicopters	3-2c
Float Maintenance	9-11
Flotation Equipment	11-3c, 11-16
Cleaning	11-16e
Inspection	11-16c
Precautions	11-16a
Repair	11-16d
Storage in Aircraft	11-16b
Flotation Equipment References	T11-5
Flyable Storage	4-2a. 7-12e
Flyable Storage for Depreservation of Installed Reciporcating Engines	4-10a
Flyable Storage for Preservation of Installed Reciporcating Engines	4-5a
Foreign Object Damage	3-2b
Foreign Object Damage Inspection	8-6e
Form Entries for Aircraft	4-8
Fuel Line Disconnect	F8-21
Fuel Nozzle, Duplex	F8-16
Fuel Nozzle, Simplex	F8-15
Fuel System	8-6o
Fuel Systems..	8-5k
Fuel Truck Approach Route	F3-3
Fuel Truck Backing Approach	F3-5
Flue Truck Operations	3-5d
Fuel Truck Required Spacing	F3-4
G	
General Position Indicators	9-3d
General Airframe Maintenance	9-1
General Inspection of Armor Plating	9-23b

INDEX - CONT

VOLUME 1

Subject — **Paragraph Figure, Table Number**

G - Continued

General Maintenance of Shock Struts 9-5d
General Procedures (Turbine Engine Inspection and Maintenance) 8-6a
General Procedures (Ground Handling) 3-3a
General Purpose First Aid Kit (Newer Configuration) F11-2
General Reciprocating Engine Maintenance Practices 7-1
General Turbine Engine Maintenance 8-1
General, Aircraft Cleaning 13-1
General, Aircraft Storage and Shipment 4-1
General, Application and Removal of Decals 6-1
General, Arctic, Desert, and Tropic Maintenance 10-1
General, Aviation Life Support Maintenance 11-1
General, Flightline Operations 3-1
General, Hangar and Shop Operations 2-1
General, Marking of Aeronautical Items 5-1
General, Pyrotechnics 12-1
Governor, Speed-Set F8-12
Governors and Fuel Controls 8-51
Grade 1100 Oil, Percent Dilution Versus Temperature for F7-25
Ground Handling 3-3
- General Procedures 3-3a
- Pushing 3-3c
- Standard Visual Signals 3-3d
- Towing 3-3b

Ground Receptacle Criteria 3-3e
Ground Receptacle Testing 3-4f
Grounding Receptacle Installation, Aircraft F3-2
Grounding Requirements 3-4a

H

Handling, Ground 3-3
Hangar and Shop Operations, General 2-1
Hangar and Shop Safety 2-5
- Electrical Safety 2-5a
- Fire Safety 2-5c
- Machine Tool Safety 2-5b

Hard Stands, Construction of F10-3
Harness, Ignition F7-18
Health Indication Test 8-6b
Hearing Protection 3-2a
Hoist Systems 9-16
- Electrical Hoist System 9-16b
- Hydraulic Hoist System 9-16a

INDEX - CONT

VOLUME 1

Subject — **Paragraph Figure, Table Number**

H - Continued

Hoisting 2-7b
Hoisting and Jacking 2-7
Hot Section Maintenance 8-6i
Hot Start Inspection 8-6c
Hydraulic Fluid Servicing 3-8
Hydraulic Hoist System 9-16a

I

Identification, First Aid Kits 11-19c
Identification of Elastic Shock Cords 9-26c
Identification of Metal Particles 7-5e
Identification Tag, Flat-Head Pin, Lead Seal, Properly Attached F11-5
Identification Tapes, Application and Installation of 6-3
Application of Identification Tapes 6-3c
Installation of Identification Tapes 6-3d
Printed-Symbolized System 6-3a
Solid Color Band System 6-3b
Igniter Plugs, Typical F8-14
Ignition Harness F7-18
Ignition System 7-4i
Ignition System Maintenance 8-6k
Ignition System, Typical, One Side of a F8-13
Ignition Systems 8-5j
Indicator, Top Center F7-15
Induction Vibrator F7-19
Induction Vibrators, Repairing T7-1
Induction, Air, System 7-7
Inlet Duct, Divided Entrance (Centrifugal-Flow Engine) F8-4
Inlet Duct, Single Entrance (Axial-Flow Engine) F8-3
Inlet Ducts 8-5a
Inspection 4-9b
Inspection (Carburetors) 7-9a
Inspection (First Aid Kits) 11-19f
Inspection (Flight Clothing) 11-14a
Inspection (Flotation Equipment) 11-16c
Inspection (Nuclear, Biological, and Chemical Equipment) 11-20a
Inspection (Oxygen Equipment) 11-17a
Inspection (Restraint Equipment) 11-21a
Inspection (Signaling Devices) 11-18a
Inspection (Survival Kits) 11-15a

INDEX - CONT

VOLUME 1

Subject — **Paragraph Figure, Table Number**

I - Continued

Inspection (Tires and Tubes) 9-9b
Inspection and Maintenance (Desert) 10-3c
Inspection and Maintenance, Turbine Engine 8-6
Inspection and Preventive Maintenance, (Tropics) 10-4a
Inspection and Testing (Elastic Shock Cords) 9-26a
Inspection Criteria, Personnel Parachute and Parachute Harness 11-22a
Inspection of Flight Controls 9-12b
Inspection of Primer Nozzles T8-1
Inspection of Stored Aircraft 4-5
Inspection of Vibration Isolators 9-25c
Inspection Procedures, Personnel Parachute and Parachute Harness 11-22b
Inspection Report, Personnel Parachute and Parachute Harness 11-22c
Inspection Training Procedures, First Aid Kits 11-19j
Inspection, Maintenance, Cleaning, and Replacement (Reciprocating Engine) 7-7a
Installation (Aircraft Litters) 9-21a
Installation (of Carburetors) 7-9f
Installation (of First Aid Kits) 11-19b
Installation (of Turbine Engines) 8-11d
Installation (Reciprocating Engines) 7-10d
Installation (Seat Belt Webbing Retarder Spring) F11-8
Installation (Shoulder Harness Webbing Retarder Spnng) F11-7
Installation (Tires and Tubes) 9-9e
Installation and Removal Procedures (Protective Covers) 9-22a
Installation of Identification Tapes 6-3d
Installation of Piston Position Indicators F7-16
Installation of Vibration Isolators 9-25b
Intermediate Storage 4-2c
Intermediate Storage for Depreservation of Installed Reciprocating Engines 4-10c
Intermediate Storage for Preservation of Installed Reciprocating Engines 4-5c
Intermediate Storage of Engines Mounted on Aircraft 7-12d
Isolators, Vibration 9-25

J

Jacking 2-7a
Jacking and Hoisting 2-7
Hoisting 2-7b
Jacking 2-7a

INDEX - CONT

VOLUME 1

Subject — **Paragraph Figure, Table Number**

K

Kit, First Aid 11-19
Kits, First Aid 11-15

L

Landing Gear Alignment..... 9-6
Landing Gear Systems 9-2
Landing Gear Systems, Troubleshooting of 9-4
Lead-Acid Batteries (Depreservation)..... 4-13e
Life Support Equipment Temporary Storage 11-13
Liferafts for Aircraft T11-4
Lighting 2-3o
Lighting Requirements 2-2n
Liquid Lock..... F7-13
Litters, Aircraft..... 9-21
Loads, Test (Elastic Shock Cords)..... T9-7
Locating Dimensions, Lockring..... T9-10
Location of Static Ground Points 2-6e
Lock, Liquid F7-13
Lockring Locating Dimension T9-10
Long Term Storage 4-2d
Low Cylinder Compression..... .7-5i

M

Machine Tool Safety 2-5b
Maintenance 4-9c
Maintenance Area..... 11-7
Maintenance of Fire Detection Systems 9-15c
Maintenance of Fire Extinguishing Systems 9-15h
Maintenance of Oxygen Systems 9-17b
Maintenance of Protective Covers..... 9-22b
Maintenance of Shop Equipment..... 2-4
Equipment Maintenance Forms 2-4d
Major Repair 2-4b
Operator Maintenance 2-4a
Painting 2-4c
Maintenance of Stored Aircraft 4-8
Maintenance of Windshield Wiper System 9-19a
Maintenance Operational Checks..... 3-12b
Maintenance Operational Checks, Test Flights and..... 3-12
Maintenance, Arctic 10-2

INDEX - CONT

VOLUME 1

Subject — **Paragraph Figure, Table Number**

M - Continued

Maintenance, Desert 10-3
Maintenance, Float 9-11
Maintenance, Ski 9-10
Maintenance, Tropic 10-4
Maintenance, Wheel 9-8
Major Engine Components (Reciprocating Engines) 7-4
- Accessones 7-4h
- Bearings 7-4c
- Connecting Rods 7-4d
- Crankcases 7-4a
- Crankshafts 7-4b
- Cylinders 7-4f
- Ignition System 7-4i
- Pistons, Pins, and Rings 7-4e
- Valves 7-4g

Major Repair 2-4b
Marking of Aeronautical Items, General 5-1
Marking of Cylinder F7-12
Marking of Defects on Turbine Engines 8-8
Marking Requirements (Aeronautical Items) 5-2
Marking, Materiel 5-3
Materals, Consumable 1-3
Materiel Marking 5-3
Measuring Fingertip Clearance F11-6
Metal Decals 6-2c
Metal Particles in Oil 7-5d
Metal Seats 9-20b
Method of Accomplishing Entries 54
Minimum Serving Length T9-9
Minor Engine Conditioning 7-6b
Modification, Seat Belt Latch F11-12
Moisture and Fungi, Parts and Fabncs Affected by 10-4b, T10-1
Moonng, Arctic-Type F1 0-2
Mounts, Turbine Engine 8-9

N

Nameplates, Fire Extinguisher 2-3
New Equipment 11-13f
Noise Levels 2-2h, 2-3h
Nosewheel Centering 9-3e

INDEX - CONT

VOLUME 1

Subject — **Paragraph Figure, Table Number**

N - Continued

Nuclear, Biological, and Chemical Equipment 11-20
Cleaning 11-20c
Inspection 11-20a
Repair . 11-20b
Nuclear, Biological, and Chemical Equipment References T11-10

O

Oil Consumption 8-6n
Oil Consumption Chart F7-22
Oil Servicing 3-6
One Side of a Typical Ignition System F8-15
Open Storage Areas 2-3r
Open Storage for Repaired Equipment and Consumable Material 2-2r
Open-Port Hot Refueling 3-5b
Open-Port Refueling 3-5a
Operating Cycle (Four-Stroke) Reciprocating Engine F7-3
Operation, Engine 3-10
Operational Check 4-9d
Operator Maintenance 2-4a
Operator Position, Painting of Shop Equipment to Highlight F2-2
Opposed-Type Crankcase F7-4
Opposed-Type Crankshaft (Six-Cylinder) (Six-Throw) F7-6
Opposed-Type Engine F7-2
Overhead Chain Hoist 2-2e
Oxygen Equipment 11-13e, 11-17
- Cleaning 11-17c
- Inspection 11-17a
- Repair 11-17b

Oxygen Equipment References T11-6
Oxygen Servicing 3-7
- Safety Precautions 3-7a
- Servicing 3-7b

Oxygen System Types 9-17a
Oxygen Systems 9-17
- Maintenance of Oxygen Systems 9-17b
- Oxygen System Types 9-17a
- Servicing of Oxygen Systems 9-17c

INDEX - CONT

VOLUME 1

Subject — **Paragraph Figure, Table Number**

P

Packaging Procedures 4-12b
Painting 2-4c
Painting of Shop Equipment to Highlight Operator Position F2-2
Paper Decals 6-2a
Parachute Harness and Personnel Parachute 11-22
Parking and Mooring 3-2e
Parking of Aircraft and Equipment in Hangars 2-6
- Emergency Evacuation of Aircraft from Hangar 2-6i
- Location of Static Ground Points 2-6e
- Parking of Aircraft in Hangars 2-6b
- Parking of Aircraft with Fuel Tanks Less Than Full 2-6c
- Safety Lanes 2-6a
- Static Grounding of Aircraft 2-6g
- Static Grounding of Ground Support Equipment 2-6h
- Testing of Static Ground Points 2-6f
- Usage of Drip Pans 2-6d

Parking of Aircraft in Hangars 2-6b
Parking of Aircraft with Fuel Tanks Less Than Full 2-6c
Particle Separators 8-5b, F8-5
Parts and Fabncs Affected by Moisture and Fungi 10-4b, T10-1
Parts Failure 7-5j
Percent Dilution Versus Temperature for Grade 1100 Oil F7-25
Permanent Shop Installations 2-2
- Adhesive Operations 2-2k
- Balancing Equipment 2-21
- Compressed Air and Water Outlets 2-2f
- Dust and Dirt Control 2-2i
- Electrical Utilities 2-2g
- Environmental Control 2-2m
- Lighting Requirements 2-2n
- Noise Levels 2-2h
- Open Storage for Repaired Equipment and Consumable Material 2-2r
- Overhead Chain Hoist 2-2e
- Shop Equipment Arrangement 2-2d
- Shop Equipment Required 2-2c
- Shop Size 2-2b
- Spray Painting 2-2j
- Storage of Compressed Gases 2-2p
- Storage of High-Value Items 2-2q
- Storage of Shop Stocks, Repair Parts, and Consumable Matenals 2-2o
- Typical Layout 2-2a

INDEX - CONT

VOLUME 1

Subject — **Paragraph Figure, Table Number**

P - Continued

Personnel 11-4
Personnel Parachute and Parachute Harness 11-22
Inspection Criteria 11-22a
Inspection Procedures 11-22b
Inspection Report 11-22c
Pistols, Pyrotechnic 12-6
Piston Position Indicators, Installation of F7-16
Piston, Pin, and Ring Assemblies F7-10
Pistons, Pins, and Rings 7-4e
Plating, Armor 9-23
Pneumatic Deicing Systems, Troubleshooting T9-4
Pneumatic System Servicing 3-9
Polyester Fabric Seat Covers (UH-60) 9-20e
Post- Cleaning 13-2d
Postflight and Parking 3-11c
Power Lever Disconnect F8-22
Practices and Procedures, Cleaning 13-2
Precautions (Arctic Maintenance) 10-2a
Precautions (Desert Maintenance) 10-3b
Precautions (Flotation Equipment) 11-16a
Precautions, Turbine Engine 8-4
Preflight (Arctic) 10-2c
Preheating 10-2b
Preoillng 7-13a
Preparation for Cleaning 13-2a
Preparation for Installation (Reciprocating Engines) 7-10c
Preparation for Installation (Turbine Engines) 8-11c
Preparation for Removal (Reciprocating Engines) 7-10a
Preparation for Removal (Turbine Engines) 8-11a
Preparation of Aircraft for Storage 4-4
Preparation of Aircraft for Storms 3-2f
Preservation (of Carburetors) 7-9e
Preservation and Depreservation of Turbine Engines 8-10
Preservation and Packaging of Aircraft Components 4-10
Packaging Procedures 4-10b
Special Reusable Containers 4-10a
Preservation of Accident-Involved Engines 7-12a
Preservation of Inoperable Engines 7-12c
Preservation of Installed Reciprocating Engines, Supplemental Instructions 4-5
Preservation of Operable Engines to be Removed for Overhaul 7-12b
Preservation of Reciprocating Engines 7-12
Flyable Storage 7-12e

INDEX - CONT

VOLUME 1

Subject — **Paragraph Figure, Table Number**

P - Continued

Intermediate Storage of Engines Mounted on Aircraft 7-12d
Preservation of Accident-Involved Engines 7-12a
Preservation of Inoperable Engines 7-12c
Preservation of Operable Engines to be Removed for Overhaul 7-12b
Prevention and Removal of Snow, Ice, and Frost Deposits 10-2e
Preventive Maintenance (Arctic) 10-2f
Preventive Maintenance (Desert) 10-3d
Primer Nozzles, Inspection of T8-1
Printed-Symbolized System 6-3a
Process Control 9-26f
Propeller Shaft Runout, Checking F7-21
Properly Attached Flat-Head Pin, Lead Seal, and Identification Tag F11-5
Protected Storage Areas 2-3q
Protection of Contents, First Aid Kits 11-19d
Protective Covers 9-22
Installation and Removal Precautions 9-22a
Maintenance of Protective Covers 9-22b
Publications 11-5
Purpose (of Manual) 1-1
Pushing 3-3c
Pyrotechnic Pistols 12-6
Pyrotechnics Storage and Handling 12-7
Pyrotechnics, General 11-13d, 12-1

R

Radial-Type Crankcase F7-5
Radial-Type Crankshaft (Single-Throw) F7-7
Rapid Hot Refueling 3-5c
Raschel Knit Seat Covers 9-20d
Reciprocating Engine Maintenance Practices, General 7-1
Reciprocating Engine Operating Cycle (Four-Stroke) F7-3
Reciprocating Engine Theory 7-3
Reciprocating Engines 3-10b
References, Consolidated List of ALSE 11-23, T11-11
References for First Aid Kits T11-9
References for Flight Clothing T11-2
References for Flotation Equipment T11-5
References for Nuclear, Biological, and Chemical Equipment T11-10
References for Oxygen Equipment T11-6

INDEX - CONT

VOLUME 1

Subject — **Paragraph Figure, Table Number**

R - Continued

References for Signaling Devices T11-7
References for Survival Kits T11-3
Reflectorizing of Equipment 3-2h
Refueling, Aircraft 3-5
Relief Tube System 9-18
Removal (Aircraft Litters) 9-21b
Removal (of Turbine Engines) 8-11b
Removal (Reciprocating Engines) 7-10b
Removal and Installation of Reciprocating Engines 7-10
  Installation 7-10d
  Preparation for Installation 7-10c
  Preparation for Removal 7-10a
  Removal 7-10b
Removal and Installation of Turbine Engines 8-11
  Installation 8-11d
  Preparation for Installation 8-11c
  Preparation for Removal 8-11a
  Removal 8-11b
Removal of Aircraft from Storage 4-8
  Depreservation 4-8a
  Inspection 4-8b
  Maintenance 4-8c
  Operational Check 4-8d
Repair (Flight Clothing) 11-14b
Repair (Flotation Equipment) 11-16d
Repair (Nuclear, Biological, and Chemical Equipment) 11-20b
Repair (Oxygen Equipment) 11-17b
Repair (Restraint Equipment) 11-21b
Repair (Signaling Devices) 11-18b
Repair (Survival Kits) 11-15b
Repair and Replacement of Brake Assembly Components 9-7f
Repair of Armor Plating 9-23d
Repair of Flexible Air Ducts 9-13b
Repair of Flight Controls 9-12c
Repair of Wheels 9-8c
Repair or Replacement (of Carburetors) 7-9d
Repair or Replacement of Fire Detection Components 9-15e
Repair Parts Van 2-3p
Reparing Induction-Vibrators T7-1
Replacement (Restraint Equipment) 11-21d
Replacement Cntena for Engines and Components 8-7
  Component Replacement Criteria 8-7b

INDEX - CONT

VOLUME 1

Subject — **Paragraph Figure, Table Number**

R - Continued

Engine Replacement Cntena 8-7a
Replacement Criteria for Wheels 9-8d
Replacement of Components (First Aid Kit) 11-19h
Required Spacing, Fuel Truck F3-4
Requirements, Marking (Aeronautical Items) 5-2
Responsibility, Aircraft Storage and Shipment 4-3
Restraint Equipment 11-21
- Cleaning 11-21c
- Inspection 11-21a
- Repair 11-21b
- Replacement 11-21d

Retractable Landing Gear Systems 9-3
- Emergency Extension Systems 9-3b
- Gear Position Indicators 9-3d
- Nosewheel Centenng 9-3e
- Retraction Test 9-3f
- Safety Devices 9-3c
- Types 9-3a

Retraction Test (Retractable Landing Gear) 9-3f
Rotor and Stator Components of an Axial-Flow Compressor F8-7
Runup and Taxiing 3-11
- Postflight and Parking 3-11c
- Safety Procedures 3-11a
- Taxiing 3-11b

S

Safety 11-3
Safety Around Airplanes 3-2d
Safety Around Helicopters 3-2c
Safety Devices (Retractable Landing Gear Systems) 9-3c
Safety Lanes 2-6a
Safety Pin Retaining Cord Secured to Snap Hook F11-11
Safety Precautions (Oxygen Servicing) 3-7a
Safety Procedures (Engine Operation) 3-10a
Safety Procedures (Runup and Taxiing) 3-11a
Safety, Cleaning 13-3
Safety, Flightlene 3-2
Scope (of Manual) 1-2
Sealing (First Aid Kits) 11-19g
Seat Belt Latch Modification F11-12
Seat Belt Webbing Retarder Spnng Installation F11-8
Seats, Aircraft 9-20

INDEX - CONT

VOLUME 1

Subject — **Paragraph Figure, Table Number**

S - Continued

Seats, Ejection 12-2
Separator, Particle F8-5
Servicable Tag-Matenel (DD Form 1574) (Yellow) F11-3
Servicing (Oxygen) 3-7b
Servicing of Oxygen Systems 9-17c
Servicing, Hydraulic Fluid 3-8
Servicing, Oil 3-6
Servicing, Oxygen 3-7
Servicing, Pneumatic System 3-9
Serving Elastic Shock Cord 9-26e
Serving Length, Minimum T9-9
Shipment of Aircraft 4-9
Shock Strut Bleeding 9-5c
Shock Strut Operation 9-5a
Shock Strut Servicing 9-5b
Shock Struts 9-5
- General Maintenance of Shock Struts 9-5d
- Shock Strut Bleeding 9-5c
- Shock Strut Operation 9-5a
- Shock Strut Servicing 9-5b

Shop and Hangar Safety 2-5
Shop Equipment Arrangement 2-2d, 2-3d
Shop Equipment Required 2-2c
Shop Equipment, Maintenance of 2-4
Shop Installations, Permanent 2-2
Shop Installations, Temporary 2-3
Shop Size 2-2b, 2-3b
Shop, Temporary, Layout F2-1
Short Term Storage 4-2b
Short Term Storage for Depreservation of Installed Reciprocating Engines 4-10b
Short Term Storage for Preservation of Installed Reciprocating Engines 4-5b
Shoulder Harness Webbing Retarder Spring Installation F11-7
Signaling Devices 11-18
- Cleaning 11-18c
- Inspection 11-18a
- Repair 11-18b

Signaling Devices References T11-7
Significance of Metal Particles 7-5f
Simplex Fuel Nozzle F8-17
Single Entrance Inlet Duct (Axial-Flow Engine) F8-3
Ski Inspection 9-10a
Ski Maintenance 9-10

INDEX - CONT

VOLUME 1

Subject — **Paragraph Figure, Table Number**

S -- Continued

Ski Inspection 9-10a
Ski Repair 9-10b
Ski Repair 9-10b
Snap Hook Safety Guard Drill Details F11-9
Snap Hook Safety Pin Construction Details F11-10
Snap Hook Secured to Safety Pin Retaining Cord F11-11
Solid Color Band System 6-3d, F6-2
Special Repair Equipment and Tools 11-11
Special Reusable Containers 4-12a
Speed-Sensitive Control F8-11
Speed-Set Governor F8-12
Spray Nozzles, Types of F10-1
Spray Painting 2-2j, 2-3j
Standard Visual Signals 3-3d
Static Grounding Cable Assembly, Fabncation of F3-1
Static Grounding of Aircraft 2-6g, 3-4
Earth Ground Testing 3-4c
Earth Grounds 3-4b
Fabrication of Ground Cable 3-4d
Ground Receptacle Critena 3-4e
Ground Receptacle Testing 3-4f
Grounding Requirements 3-4a
Static Grounding of Ground Support Equipment 2-6h
Storage and Handling, Pyrotechnics 12-7
Storage Area Criteria 11-9
Storage Categories 4-2
Storage in Aircraft, Flotation Equipment 11-16b
Storage of Compressed Gases 2-2p
Storage of Elastic Shock Cords 9-26g
Storage of High-Value Items 2-2q
Storage of Shop Stocks, Repair Parts, and Consumable Materials 2-2o
Stored Aircraft, Inspection of 4-6
Stored Aircraft, Maintenance of 4-7
Struts, Shock 9-5
Sudden Engine Stoppage 7-5b
Sudden Reduction In Engine RPM 7-5c

INDEX - CONT

VOLUME 1

Subject — **Paragraph Figure, Table Number**

S - Continued

Survival Kits 11-13a, 11-15
Cleaning 11-15c
Inspection 11-15a
Repair 11-15b
Survival Kit References T11-3
Survival Vests 11-13b
System, Exhaust 7-8
Systems, Brake 9-7
Systems, Deicing 9-14
Systems, Hoist 9-16
Systems, Landing Gear 9-2
Systems, Oxygen 9-17

T

Tag-Materiel, Serviceable (DD Form 1574) (Yellow) F11-3
Tag-Materiel, Unserviceable (Repairable) (DD Form 1577-2) (Green) F11-4
Tapes, Color-Coded F6-1
Taxiing 3-11b
Taxiing and Runup 3-11
Temperature and Humidity Control 2-3m
Temporary Shop Installations 2-3
Adhesive Operations 2-3k
Balancing Equipment 2-3l
Chain Hoists 2-3e
Compressed Air Panels 2-3f
Dust and Dirt Control 2-3i
Electrical Utilities 2-3g
Equipment Mounted in Mobile Shelters 2-3c
Flammable Materials 2-3n
Lighting 2-3o
Noise Levels 2-3h
Open Storage Areas 2-3r
Protected Storage Areas 2-3q
Repair Parts Van 2-3p
Shop Equipment Arrangement 2-3d
Shop Size 2-3b
Spray Painting 2-3j
Temperature and Humidity Control 2-3m

INDEX - CONT

VOLUME 1

Subject — **Paragraph Figure, Table Number**

T - Continued

Typical Shop Layout 2-3a
Temporary Shop Layout F2-1
Temporary Storage of Life Support Equipment 11-13
Flotation Equipment 11-13c
New Equipment 11-13f
Oxygen Equipment 11-13e
Pyrotechnics 11-1 3d
Survival Kits 11-13a
Survival Vests 11-1 3b
Test Equipment T.11-1
Test Flights and Maintenance Operational Checks 3-12
Carbon Monoxide Detection 3-12c
Maintenance Operation Checks 3-12b
Test Flight Safety 3-12a
Test Flight Safety 3-12a
Test Loads (Elastic Shock Cords) T9-7
Test, Cable T9-3
Testing of Fire Detection Systems 9-15f
Testing of Static Ground Points 2-6f
Theory, Reciprocating Engines 7-3
Thermocouple Maintenance 8-6m
Tiedown Equipment, Cargo 9-24
Timing Marks, Built-In F7-17
Tires and Tubes 9-9
Balance 9-9c
Cleaning 9-9a
Inspection 9-9b
Installation 9-9e
Valve Cores 9-9d
Tools and Special Repair Equipment 11-11
Top Center Indicator F7-15
Towing 3-3b
Training Equipment 11-12
Troop Seats 9-20a
Tropic Maintenance 10-4
Inspection and Preventive Maintenance 10-4a
Parts and Fabrics Affected by Moisture and Fungi 10-4b
Troubleshooting of Fire Detection Systems 9-15d, T9-5
Troubleshooting of Landing Gear Systems 9-4
Troubleshooting Pneumatic Deicing Systems T9-4

INDEX - CONT

VOLUME 1

Subject — **Paragraph Figure, Table Number**

T - Continued

Tube, Relief, System 9-18
Tubes and Tires 9-9
Turbine and Exhaust Maintenance 8-6j
Turbine Assembly Elements F8-10
Turbine Bearing Maintenance 8-61
Turbine Discharge Pressure Pickup Line F8-19
Turbine Engine Analysis Ground Testing 8-6d
Turbine Engine Design and Construction 8-5
- Accessory Section 8-5h
- Combustion Section 8-5e
- Compressor Section 8-5c
- Diffuser Section 8-5d
- Exhaust Section 8-5g
- Fuel Systems 8-5k
- Governors and Fuel Controls 8-51
- Ignition Systems 8-5j
- Inlet Ducts 8-5a
- Particle Separators 8-5b
- Turbine Section 8-5f

Turbine Engine Inspection and Maintenance 8-6
- Cold Section Maintenance 8-6g
- Compressor Blade Inspection and Repair 8-6h
- Compressor Cleaning 8-6f
- Foreign Object Damage Inspection 8-6e
- Fuel System 8-60
- General Procedures 8-6a
- Health Indication Test 8-6b
- Hot Section Maintenance 8-6i
- Hot Start Inspection 8-6c
- Ignition System Maintenance 8-6k
- Oil Consumption 8-6n
- Thermocouple Maintenance 8-6m

Turbine and Exhaust Maintenance 8-6J
Turbine Bearing Maintenance 8-61
Turbine Engine Analysis Ground Testing 8-6d
Turbine Engine Maintenance, General 8-1
Turbine Engine Mounts 8-9
Turbine Engine Precautions 8-4
Turbine Engine Theory 8-3
Turbine Engines 3-10c
Turbine Engines, Preservation and Depreservation of 8-10
Turbine Engines, Removal and Installation of 8-11

INDEX - CONT

VOLUME 1

Subject — **Paragraph Figure, Table Number**

T - Continued

Turbine Section 8-5f
Turbocharger and Supercharger Maintenance..... 7-7b
Types (of Reciprocating Engines)..... 7-2a
Types (of Turbine Engines) 8-2a
Types and Designations, Engine 7-2
Types and Designations, Engine 8-2
Types of Bearing..... F7-8
Types of Decals 6-2
Types of Environmental Control Systems..... 9-13a
Types of Fire Detection Systems..... 9-15b
Types of Flight Controls 9-12a
- Control Cables..... 9-12e
- Control System Components 9-12f
- Flight Control Operating Systems 9-12d
- Inspection of Flight Controls 9-12b
- Repair of Flight Controls 9-12c
- Types 9-12a

Types of Retractable Landing Gear Systems..... 9-3a
Types of Spray Nozzles F10-1
Types of Valves F7-14
Types of Vibration Isolators 9-25a
Typical Compressor Blade Repair Limits F8-18
Typical Igniter Plugs..... F8-14
Typical Layout 2-2a, 2-3a

U

Unserviceable (Repairable) Tag-Materiel (DD Form 1577-2) (Green) F11-4
Upholstered Seats..... 9-20c
Usage of Drip Pans 2-6d

V

Valve Cores 9-9d
Valve Types F7-14
Valves 7-4g
Vibration Isolators 9-25
- Inspection of Vibration Isolators..... 9-25c
- Installation of Vibration Isolators 9-25b
- Types of Vibration Isolators..... 9-25a

INDEX - CONT

VOLUME 1

Subject	Paragraph Figure, Table Number
V - Continued	
Vibrator, Induction	F7-19
Vinyl Film Decals	6-2b
W	
Wheel Cleaning	9-8a
Wheel Inspection	9-8b
Wheel Maintenance	9-8
Repair of Wheels	9-8c
Replacement Criteria for Wheels	9-8d
Wheel Cleaning	9-8a
Wheel Inspection	9-8b
Windshield Wiper System	9-19
Adjustment of Windshield Wiper Systems	9-19b
Maintenance of Windshield Wiper Systems	9-19a
Wiper, Windshield, System	9-19
Work Area Criteria	11-8

INDEX - CONT

VOLUME 2

Subject — **Paragraph Figure, Table Number**

A

Absorbing Units, Dampening and 4-19
Acceptable and Unacceptable Tube Bends F4-5
Accumulator, Cylindrical F4-118
Accumulator, Operation 4-15b
Accumulator, Spherical F4-119
Accumulators 4-15
  Accumulator Operation 4-15b
  Maintenance 4-15c
  Types 4-15a
Actuating Cylinder, Double-Action (Extension) F4-134
Actuating Cylinder, Double-Action (Retraction) F4-135
Actuating Cylinder, Single-Action F4-133
Actuating Cylinders (Actuators) 4-16g
Actuators, Troubleshooting T4-42
Adjuster Valve, Brake F4-157
After Swage Dimensions F4-86
Air Cylinder, Spherical F4-95
Air Cylinders, Hydraulic Reservoirs ..... 4-11 h
Air Filters 4-12e
Air Valve Cores, High-Pressure F4-174
Aircraft Brake Systems 4-18
  Brake Deboosters 4-18c
  Helicopter Rotor Brake Systems 4-18d
  Maintenance of Brake Systems 4-18e
  Wheel Brake Assemblies 4-18b
  Wheel Brake Systems 4-18a
Alignment, Tube and Fitting F4-14
Alignment, Tubing F4-20
Aluminum Protective Dust Plug and Moisture Seal F4-54
AN Flared Fitting Identification T4-9
Application of Mechanical Advantage F2-5
Application of Swaged Tubing Repairs 4-9a
Applications of MIL-H-83282 ..... 4-21c, T4-43
Aromatic And Heat-Resistant Hose, MIL-H-6000 ..... F4-35
Aromatic, Flame, and Oil-Resistant Hose, MIL-H-7938 ..... F4-36
Aromatic-Resistant Hose, Flame and MIL-H-8794 ..... F4-34
Aromatic-Resistant Hose, Nonself-Sealing, MIL-H-5593 ..... F4-37
Aromatic-Resistant Hose, Self-Sealing, MIL-H-7061 ..... F4-38
Assembly Clearance, Nipple F4-47
Assembly of High-Pressure Tetrafluoroethylene (Teflon)
  Hose Assemblies 4-5j
Assembly of Medium-and Low-Pressure Hose Assemblies F4-43

INDEX - CONT

VOLUME 2

Subject — **Paragraph Figure, Table Number**

A - Continued

Assembly of Medium - Pressure Tetrafluoroethylene (Teflon) Hose Assemblies ... 4-51
Assembly Surface, Nipple ... F4-46
Assembly, V-Ring Packings in Various Positions of ... F4-71

B

Backup Ring Installation, Double ... F4-76
Backup Ring Installation, Single ... F4-75
Backup Ring, Teflon, Installing ... F4-73
Backup Ring, Teflon, Reversing Spiral of ... F4-74
Backup Ring, Teflon, Stretching ... F4-72
Backup Rings ... 4-8
Identification ... 4-8a
Installation ... 44-8b
Backup Rings, Leather, Installation of ... F4-77
Baffles and Fins ... 4-11c
Baffles, Fins, and Finger Strainer, Reservoir with ... F4-91
Ball Size, Inspection, Chart ... T4-13
Band Identification, Solid Color ... F4-2
Band Location, Tube Insertion ... T4-37
Basic Swage Tool Assembly Showing Lower Die Block Assembly and Position of Fitting Locator ... F4-84
Bead Dimensions ... F4-13
Beaded Tubing Joints ... 4-2h
Beading Large Tubing ... F4-11
Bend Radii for Conduit and Fluid Lines ... T4-1
Bend Radii of Hose for Fuel, Oil, and Coolant Systems ... T4-32
Bending Machine, Bending Tube with ... F4-4
Bending Tube with Bending Machine ... F4-4
Bending Tubing ... 4-2e
Bends, Installation of Flexible Hose ... 4-2c
Bent-Axis Constant-Volume Pump ... F4-101
Bleeding Brake Hydraulic System ... F4-160
Blocked Flowing Hydraulic Fuse ... F4-142
Boss Installation, Torque Valves for ... T4-7
Brake Assembly, Disc ... F4-151
Brake Assembly, Disc, Cross Section ... F4-152
Brake Bleeding, Gravity Method for ... F4-161
Brake Hydraulic System, Bleeding ... F4-160
Brake System, Rotor Blade ... F4-159
Brake Systems, Aircraft ... 4-18

INDEX - CONT

VOLUME 2

Subject — **Paragraph Figure, Table Number**

B - Continued

Bulge, Coupling, Low-and Medium-Pressure Hose Assemblies F4-44
Bulge, Coupling, MIL-H-7061 Hose Assembly T4-30
Bulkhead and Universal Fitting Assembly, Combination T4-27

C

Chafing, Installation of Flexible Hose 4-6f
Check Valve, Orifice F4-128
Check Valve, Simple F4-127
Check Valves 4-16c
Checking Swaged Joint with D9892 Inspection Gauge F4-85
Chipless Cutter..... F4-81
Clamp Sizes, Support (For Use with MIL-H-38360 Hose of Teflon) T4-29
Cleaning (of 55-Gallon Drums) 3-3b
Cleaning Tubing..... 4-2b
Clogged Filters In Differential Pressure Indicator F4-100
Clogged Fluid Filter F4-98
Closed Center Hydraulic System 4-17b
Combination Bulkhead and Universal Fitting Assembly F4-27
Complex Shock Strut (Metering Pin) F4-171
Complex Shock Strut (Plunger) F4-172
Components, MS Fitting and..... F4-17
Compound Master Cylinder F4-149
Computation of Force, Area, and Pressure 2-1b
Computation of Volume, Area, and Length of Stroke 2-1c
Computing Force, Pressure, and Area F2-1
Computing Volume, Length, and Area F2-2
Conduit and Fluid Lines, Bend Radii for T4-1
Connections, Tubing-to-Tubing F4-22
Constant-Volume Pump, Bent-Axis F4-101
Constant Volume Pump Foot Valve F4-104
Constant Volume Pump (Piston Installation) F4-102
Constant Volume Pump (Piston Operation) F4-103
Consumable Materials..... 1-3
Contamination, Fluid 2-4
Contamination Prevention 2-4c
Control Units, Flow 4-16
Control Valve, Power Brake (Brake Applied) F4-152
Control Valve, Power Brake (Brake Released) F4-153
Control Valve, Solenoid-Actuated (De-energized) F4-126
Control Valve, Solenoid-Actuated (Energized) F4-125

INDEX - CONT

VOLUME 2

Subject — **Paragraph Figure, Table Number**

C - Continued

Control Valves 4-16b
Conversion of Aircraft to Fire-Resistant Hydraulic Fluid 4-21
- Applications of MIL-H-83282 ..... 4-21c
- Conversion Procedures 4-21e
- Hydraulic Fluid MIL-H-5606 ..... 4-21a
- Hydraulic Fluid MIL-H-83282 ..... 4-21b
- Non-Applicability of MIL-H-83282 ..... 4-21d
- Operating Temperature Limitations 4-21f

Conversion Procedures (MIL-H-5606 to MIL-H-83282) 4-21e
Coupling Bulge, Low-and Medium-Pressure Hose Assemblies F4-44
Coupling Bulge, MIL-H-7061 Hose Assembly T4-30
Couplings, Quick-Disconnect 4-10
Cross Section, Piston Damper F4-163
Cross Section, Vane Damper F4-168
Cutoff Factor, MIL-H-8788 or MIL-H-8790 (in Inches) T4-15
Cutoff Factors, MIL-H-38360 Hose (in Inches) T4-27
Cutoff Factors, Teflon Hose (in Inches) T4-22
Cutter, Chipless F4-81
Cutting Flexible Hose, Knife for F4-39
Cutting, Marking Tube Prior to F4-46
Cutting, Tube with Tube Cutter F4-3
Cutting Tubing 4-2d

D

Damaged Fittings F4-29
Dampening and Absorbing Units 4-19
Hydraulic Damper 4-19a
Liquid Springs 4-19c, F4-174
Shock Struts 4-19b
Damper, Piston F4-162
Damper, Vane F4-166
Data Drawing, Tube Bend F4-6
Detecting Fluid Contamination 2-4a
Determining Hose Assembly Length F4-40
Determining Tube Thickness and Burst Pressure T4-11
Devices for Regulating Pressure 4-14
Pressure Gauges 4-14a
Pressure Reducing Valves 4-14d
Pressure Relief Valves 4-14c
Pressure Switches 4-14b

INDEX - CONT

VOLUME 2

Subject — **Paragraph Figure, Table Number**

D - Continued

Differential Pressure Indicator (Clogged Filters) F4-99
Differential Pressure Indicator (Normal Flow) F4-100
Dimensions, After Swage F4-86
Dimensions, Beading F4-13
Dimensions for Double-Flared Tubing F4-8
Dimensions for Single-Flared Tubing F4-7
Disc Brake Assembly F4-154
Disc Brake Assembly Cross Section F4-155
Distance Between Supports for Fluid Tubing, Maximum T4-12
Double Backup Ring Installation F4-76
Double Lap Flare, Tubing with F4-11
Double-Action Actuating Cylinder (Extension) F4-134
Double-Action Actuating Cylinder (Retraction) F4-135
Double-Action Hand Pump F4-111
Double-Flared Tubing, Dimensions for F4-8
Dual Internal O-Ring Removal F4-64
Dual Parking Brake Valve F4-156
Dual Parking Brake Valve (Off) F4-157
Dual Parking Brake Valve (On) F4-158
Dust Cap (AN-SAE Function), Plastic Protective F4-56
Dust Cap, Plastic Protective F4-55
Dust Cap, Steel Protective F4-53
Dust Plug and Moisture Seal, Aluminum Protective F4-54
Dust Plug and Moisture Seal (AN-SAE Threaded) Plastic Protective F4-51
Dust Plug and Moisture Seal, Steel Protective F4-52

E

Ease of Installation (of Hydraulic Systems) 2-2c
Ease of Operation (of Hydraulic Systems) 2-2b
Efficiency (of Hydraulic Systems) 2-2a
Elliptical Rings 4-7b, F4-70
External O-Ring Installation F4-69
External O-Ring Removal (Spoon-Type Tools) F4-65
External O-Ring Removal (Wedge-Type Tools) F4-66

F

Failure Modes and Recommended (Permaswage) Repair Methods F4-79
Field Assembly of High Pressure Teflon Hose, MIL-H-38360 ..... F4-50
Field Disassembly of Teflon Hose F4-45

INDEX - CONT

VOLUME 2

Subject — **Paragraph Figure, Table Number**

F - Continued

Field Fabrication of High-Pressure Hose Assemblies F4-41
Filter Element Bypass Valve, Hydraulic Reservoirs 4-11f
Filter Elements, Hydraulic Reservoirs 4-11e
Filter Elements, Hydraulic Systems Filters 4-12c
Filter Elements, Reservoir with F4-94
Filter, Fluid, Assembly F4-96
Filters, Hydraulic System 4-12
Finger Strainers, Hydraulic Reservoirs ..... 4-11 d
Fingertight-Plus Turns Methods, Hose Clamp Tightening T4-10
Fingertight-Plus Turns Methods, Hose Clamp Tightening, Beaded Tubing F4-3
Fitting Dimensions After Swaging T4-39
Fittings 4-3
Flared Fittings 4-39
Flareless Fittings 4-3a
Oxygen System Tapered Pipe Thread 4-3b
Rosan Fluid Fittings 4-3f
Straight Pipe Thread 4-3c
Universal Fittings AN 832, AN 833, and AN 834, High Pressure 4-3e9A
Universal Fittings AN 832, AN 833, and AN 834, Low Pressure 4-3d
Fittings, Damaged F4-29
Fittings, Tubing F4-15
Flame and Aromatic Resistant Hose, MIL-H-8794 ..... F4-34
Flame, Aromatic, and Oil-Resistant Hose, MIL-H-7938 ..... F4-36
Flared Fitting Identification, AN T4-9
Flared Fittings 4-3g
Flareless Fitting Installation, Bulkhead F4-24, T4-4
Flareless Fittings 4-3a
Flareless Fittings, MS F4-18
Flaring Tubing 4-2f
Flexible Hose Assemblies
- Assembly of High-Pressure Tetrafluoroethylene (Teflon) Hose Assemblies 4-5j
- Assembly of Medium-Pressure Tetrafluoroethylene (Teflon) Hose Assemblies 4-5i
- Identification of Flexible Hose 4-5a
- Identification Tags for Field Fabricated Hose Assemblies 4-5g, F4-42
- Instructions for Assembly of High-Pressure (3000 psi) Hose Assemblies MS28759 and MS28762 ..... 4-5e
- Instructions for Assembly of Medium-Pressure, MS28741, and Low-Pressure, AN6270, Hose Assemblies 4-5h
- Instructions for Repair of Flexible Rubber Hose 4-5d
- Proof Testing of Flexible Hose Assemblies 4-5f

INDEX - CONT

VOLUME XX

Subject — **Paragraph Figure, Table Number**

F - Continued

Replacement of Flexible Hose 4-5c
Self-Sealing Hose for Aromatic Fuel, MIL-H-7061 ..... 4-5k
Storage of Hose and Hose Assemblies 4-5b
Use of Dust Plugs, Dust Caps, and Moisture Seals 4-51
Flexible Hose, Installation of 4-6
Floating Piston Shock Strut F4-173
Floating Piston Shuttle Valve F4-132
Flow Control Units 4-16
Actuating Cylinders (Actuators) 4-16g
Check Valves 4-16c
Control Valves 4-16b
Hydraulic Fuses 4-16k
Hydraulic Servos 4-16i, F4-138
Irreversible Valves 4-16j, F4-139
Maintenance of Hydraulic Flow Control Units 4-161
Priority Valves 4-16e
Rachet Valve 4-16h
Selector Valves 4-16a
Sequence Valves 4-16d
Shuttle Valves 4-16f
Fluid Contamination 2-4
Contamination Prevention 2-4c
Detecting Fluid Contamination 2-4a
System Flushing 2-4b
Fluid Dispenser, Hydraulic F3-6
Fluid Filter Assembly F4-96
Fluid Filter (Clogged) F4-98
Fluid Filter (Normal Flow) F4-97
Fluid-Pressurized Reservoir (Pressurized) F4-93
Fluid-Pressurized Reservoir (Unpressurized) F4-92
Full Flow in Hydraulic Fuse F4-141
Fuse Assembly, Hydraulic F4-140

G

Gasket Installation, MS Fitting F4-19
Gauge, Pressure F4-114
General Hydraulic Maintenance Practices 4-1
General Shop Rules (Hydraulic Shop) 3-1
Responsibility 3-1la
Shop Housekeeping 3-1b
Shop Safety 3-1id

INDEX - CONT

VOLUME 2

Subject — **Paragraph Figure, Table Number**

G - Continued

Shop Tools and Materials 3-1c
Gravity Method for Brake Bleeding F4-161

H

Hand Pump Test Circuit F4-112
Hand Pumps 4-13c
Handling of Hydraulic Fluid in 55-Gallon Drums 3-3
Cleaning 3-3b
Storage 3-3a
Transporting Fluid to Aircraft 3-3d
Withdrawing Fluid from Drum 3-3c
Helicopter Rotor Brake Systems 4-18d
High-Pressure Air Valve Cores F4-174
High-Pressure Hose Assemblies, Field Fabrication of F4-41
High-Pressure Teflon Hose, MIL-H-38360, Field Assembly of F4-50
High-Pressure Tubing, Repairing F4-33
Hose Assemblies, Flexible 4-5
Hose Assembly Length, Determining F4-42
Hose Clamp, In Installation of Flexible Hose 4-61
Hose Clamp Tightening, Fingertight-Plus Tums Method T4-10
Hose Clamp Tightening, Fingertight-Plus Tums Method, Beaded Tubing T4-3
Hose Clamp, Tightening, With Socket F4-32
Hose Connections to Engines, Installation of Flexible Hose 4-6h
Hose Cutoff Factor, MIL-H-8788 or MIL-H-8790 Hose (in Inches) T4-14
Hose Cutoff Factors, MIL-H-38360 Hose (in Inches) T4-27
Hose End Fitting and Coupling Nut Installation Torque In Inch-Pounds T4-34
Hose Installation, Flexible Hose 4-5b
Hose Line Installation Aids for All Types of Hoses F4-57
Hose Markings, and Installation of Flexible Hose 4-6j
Hose, MIL-F-27272, Tetrafluoroethylene (in Inches) T4-21
Hose, MIL-H-38360, Tetrafluoroethylene (in Inches) T4-27
Hose Restrictions, Installation of Flexible Hose 4-6d
Hydraulic Dampers 4-19a
Hydraulic Filler and Bleeder Unit 3-2a
Hydraulic Fluid (Fire Resistant), Conversion of Aircraft to 4-21
Hydraulic Fluid in Army Aircraft, Types 2-3
Hydraulic Fluid in 55-Gallon Drums, Handling of 3-3
Hydraulic Fluid MIL-H-5606 ..... 4-21a
Hydraulic Fluid MIL-H-83282 ..... 4-21b
Hydraulic Fuse Assembly F4-140
Hydraulic Fuse (Blocked Flow) F4-142
Hydraulic Fuse (Full Flow) F4-141

INDEX - CONT

VOLUME 2

Subject — **Paragraph Figure, Table Number**

H - Continued

Hydraulic Hose Testing Unit 3-2d
Hydraulic Hose Testing Unit, Typical F3-3
Hydraulic Maintenance Practices, General 4-1
Hydraulic Motor F4-113
Hydraulic Motors 4-13d
Hydraulic Packings and O-Rings 4-7
  Elliptical Rings 4-7b, F4-70
  O-Rings 4-7a
  V-Ring Packings 4-7c
Hydraulic Reservoirs 4-11
  Air Cylinders ..... 4-11 h
  Baffles and Fins 4-11c
  Filter Element Bypass Valve 4-11f
  Filter Elements ..... 4-11 e
  Finger Strainers ..... 4-11 d
  Maintenance of Reservoirs 4-111
  Standpipes 4-11g
  Theory of Operation ..... 4-11 b
  Types of Hydraulic Reservoirs Used in Hydraulic Systems ..... 4-11 a
Hydraulic Servos 4-161, F4-138
Hydraulic System Filler and Bleeder, Typical F3-1
Hydraulic System Filters 4-12
  Air Filters 4-12e
  Filter Elements 4-12c
  Servicing Filters 4-12f
  Theory of Operation 4-12b
  Two-Stage Fluid Filters 4-12d
  Uses of Filters In Hydraulic Systems 4-12a
Hydraulic System, Open-Center (Valve Closed) F4-143
Hydraulic System, Open-Center (Valve Open) F4-144
Hydraulic Systems In Army Aircraft, Use of 2-2
Hydraulic Test Stand, Fixed 3-2b
Hydraulic Test Stand, Portable, Gasoline Engine-Driven 3-2c
Hydraulic Test Stand, Typical Gasoline Engine-Driven F3-2

I

Identification of Backup Rings 4-8a
Identification of Flexible Hose 4-5a
Identification of O-Rings F4-63
Identification Tags for Field Fabricated Hose Assemblies 4-5g, F4-42
Identification Tape, Printed-Symbol F4-1
In-Line Cam-Operated Selector Valve (Actuator Extending) F4-123

INDEX - CONT

VOLUME 2

Subject — **Paragraph Figure, Table Number**

I - Continued

In-Line Cam-Operated Selector Valve (Actuator Retracting) F4-122
Inspection
of Quick Disconnect Coupling 4-10b
of Swaged Joint 4-9g
Inspection Ball Size Chart T4-13
Inspection Checking (of Swaging), Troubleshooting Guide for T4-38
Installation
Hose 4-6b
of Backup Rings 4-8b
of Beaded Tubing 4-2j
of Flared Tubing 4-21i
of Flexible Hose 4-6
of Quick-Disconnect Couplings 4-10a
Installation Aids, Hose Line, for all Types of Hose F4-57
Installation of Flexible Hose 4-6
Bends 4-6c
Chafing 4-6f
Hose Clamp 4-6i
Hose Connections to Engines 4-6h
Hose Installation 4-6b
Hose Markings 4-6j
Hose Restrictions 4-6d
Lubrication 4-6a
MS Flared Swivel Connections Torquing 4-6k
Support 4-6e
Temperature Protection 4-6g
Installation of Leather Backup Rings F4-77
Installation of MS33514 Fitting End F4-25
Installation Procedures, Teflon Hose, Right and Wrong F4-49
Installation Torque Values MS Flared Swivel F4-25
Installation Torque Values MS Flared Swivel Nut Fittings
(Reference AND100064) T4-33
Installed Low-Pressure Hose F4-16
Installing Teflon Backup Ring F4-73
Instructions
for Assembly of High Pressure (3000 psi) Hose Assemblies
MS28759 and MS28762 ..... 4-5e
for Assembly of Medium-Pressure, MS28741, and
Low-Pressure, AN6270, Hose Assemblies 4-5h
for Repair of Flexible Rubber Hose 4-5d
Internal O-Ring Installation (Metallic Sleeve) F4-68
Internal O-Ring Installation (Paper Cover) F4-67
Internal O-Ring Removal (Pull-Type Extractor) F4-61

INDEX - CONT

VOLUME 2

Subject — **Paragraph Figure, Table Number**

I - Continued

Internal O-Ring Removal (Push-Type Extractor) F4-63
Internal O-Ring Removal (Wedge-Type Extractor) F4-62
Introduction
- Consumable Materials 1-3
- Purpose 1-1
- Scope 1-2

Irreversible Valves 4-16j, F4-139

J

Jamnut (AN924) Used on Fittings, Torque Values for T4-8

K

Kellogg Stroke Reduction Pump Assembly F4-109
Kellogg Stroke Reduction Pump (Reduced Output) F4-110
Knife for Cutting Flexible Hose F4-39

L

Landing Gear System Using Mechanically Actuated Sequence Valves F4-129
Large Tubing, Beading F4-12
Liquid Spring, Tailwheel F4-176
Liquid Springs 4-19c, F4-175
Low-Pressure Hose, Installed F4-16
Low-Pressure Tubing, Repair of F4-30
Low-Pressure Tubing Repair, Tubing End Clearance for F4-31
Lubricant Selection, Packing and T4-6
Lubrication (during Installation of Flexible Hose) 4-6a
Lubrication (of Hydraulic Systems) 2-2e

M

Main Rotor Assembly with Piston Dampers F4-168
Maintenance of Accumulators 4-15c
Maintenance of Brake Systems 4-18e
Maintenance of Power Pumps 4-13b
Maintenance of Reservoirs 4-111
Maintenance of Shop Equipment 3-2
- Hydraulic Filler and Bleeder Unit 3-2a
- Hydraulic Hose Testing Unit 3-2d

INDEX - CONT

VOLUME 2

Subject — **Paragraph Figure, Table Number**

M - Continued

Hydraulic Test Stand, Fixed 3-2b
Hydraulic Test Stand, Portable, Gasoline Engine-Driven 3-2c
Master Gauge Unit 3-2f
Tube Bending Machine, Hand-Operated 3-2e
Marking MS Fittings F4-23
Marking, Tube End F4-83
Marking with Permaswage Marking Tool, D9862-S, M, and L F4-82
Master Cylinder, Compound F4-149
Master Cylinder, Power-Boost (Brake Applied) F4-150
Master Cylinder, Power-Boost (Brake Released) F4-151
Master Cylinder, Simple F4-148
Master Gauge Unit 3-2f
Master Gauge Unit, Typical F3-5
Maximum Distance Between Supports for Fluid Tubing T4-12
Mechanical Advantage 2-1e, F2-4
Mechanical Advantage, Application of F2-5
Medium-and Low-Pressure Hose Assemblies, Assembly of F4-45
Medium-Pressure Teflon Hose Assembly Procedure F4-48
MIL-H-83282, Applications of F4-43
MIL-H-83282, Non-Applicability of 4-21d, T4-44
MIL-H-83282, Operating Temperature Limitations of T4-45
Minimum Bend Radii of Hose for Fuel Oil, and Coolant Systems T4-32
Motor, Hydraulic F4-113
Motors, Pumps and 4-13
MS Fitting and Components F4-17
MS Fitting Gasket Installation F4-19
MS Fittings, Marking F4-23
MS Flared Swivel Connectors Torquing, and Installation of Flexible Hose 4-6k
MS Flareless Fittings F4-18
MS Turns and Torque Valves F4-21
MS21921 Coupling Nut, Torque Values for T4-5
MS33514 Fitting End, Installation of F4-25

N

Nipple Assembly Clearance F4-47
Nipple Assembly Surface F4-46
Non-Applicability of MIL-H-83282 ..... 4-21 d, T4-44
Nonself-Sealing, Aromatic and Heat-Resistant Hose, MIL-H-6000 ..... F4-35
Nonself-Sealing, Aromatic-Resistant Hose, MIL-H-5593 ..... F4-37
Normal Flow in Differential Pressure Indicator F4-99
Normal Flow in Fluid Filter F4-97

INDEX - CONT

VOLUME 2

Subject — **Paragraph Figure, Table Number**

N - Continued

Nose Landing Gear with Piston Damper F4-164
Nose Landing Gear with Vane Damper F4-168
Nut Installation Torque in Inch-Pounds, Hose End Fitting and Coupling T4-34

O

O-Ring Identification F4-59
O-Ring Installation, External F4-69
O-Ring Installation, Internal (Metallic Sleeve) F4-68
O-Ring Installation, Internal (Paper Cover) F4-69
O-Ring, Removal of F4-60
O-Ring Removal, Dual Internal F4-64
O-Ring Removal, External (Spoon-Type Extractor) F4-65
O-Ring Removal, External (Wedge-Type Extractor) F4-66
O-Ring Removal, Internal (Pull-Type Extractor) F4-61
O-Ring Removal, Internal (Push-Type Extractor) F4-63
O-Ring Removal, Internal (Wedge-Type Extractor) F4-62
O-Rings 4-7a
Open-Center Hydraulic System (Value Closed) F4-143
Open-Center Hydraulic System (Value Open) F4-144
Operating Pressure (psi) for MIL-H-7061, Proof Test and..... T4-31
Operating, Proof, and Burst Test Pressures for AN6270 Hose
Assembly using MIL-H-5593 Low Pressure Hose T4-19
Operating, Proof, and Burst Test Pressures for MIL-H-83796
Medium Pressure Hose Assembly, Lightweight T4-17
Operating, Proof, and Burst Test Pressures for MIL-H-83797
Medium Pressure Hose T4-18
Operating, Proof, and Burst Test Pressures for MS28741 Medium
Pressure Hose Assemblies, using Single Wire Braid Hose,
Military Specification MIL-H-8794 ..... T4-16
Operating, Proof, and Burst Test Pressures for MS28759 and
MS28762 Hose Assemblies using MIL-H-8788 High Pressure Hose..... T4-15
Operating Temperature Limitations (of Hydraulic Fluid) 4-21f
Operating Temperature Limitations of MIL-H-83282 ..... T4-45
Orifice Check Valve F4-128
Oxygen System Tapered Pipe Thread 4-3b

P

Packing and Lubricant Selection T4-6
Packings and O-Rings, Hydraulic 4-7

INDEX - CONT

VOLUME 2

Subject — **Paragraph Figure, Table Number**

P - Continued

Parking Brake Valve, Dual F4-156
Parking Brake Valve, Dual (Off) F4-157
Parking Brake Valve, Dual (On) F4-158
Pascal's Law 2-1d, F2-3
Permaswage Fittings, Typical Styles of F4-78
Permaswage Marking Tool, D9862-S, M, and L, Marking with F4-82
Permaswage Repair with D10000 Series Tooling-Tube
  Material and Maximum Operating Pressure Limitations (psi) T4-35
Petroleum-Base Fluid (Hydraulic) 2-3b
Pipe Thread, Straight Thread and F4-26
Piston Damper F4-162
Piston Damper Cross Section F4-163
Piston Damper, Nose Landing Gear with F4-164
Piston Dampers, Main Rotor Assembly with F4-165
Piston-Type Pressure Switch F4-115
Plastic Protective Dust Cap F4-55
Plastic Protective Dust Cap (AN-SAE Friction) F4-56
Plastic Protective Dust Plug and Moisture Seal (AN-SAE Threaded) F4-51
Pneudraulic Systems, Types of 4-17
  Closed-Center Hydraulic 4-17b
  Open-Center Hydraulic 4-17a
  Pneumatic System 4-17c
Pneudraulics Theory and Basic Principles 2-1
  Computation of Force, Area, and Pressure 2-1b
  Computation of Volume, Area, and Length of Stroke 2-1c
  Mechanical Advantage 2-1e, F2-4
  Pascal's Law 2-1d, F2-3
  Qualities of Hydraulic Fluid ..... 2-1 a
  Use of Air in Hydraulic Systems 2-1f
Pnuematic System 4-17c
Power Brake Control Valve (Brake Applied) F4-152
Power Brake Control Valve (Brake Released) F4-153
Power Pumps 4-13a
Power-Boost Master Cylinder (Brake Applied) F4-150
Power-Boost Master Cylinder (Brake Released) F4-151
Precautions
  for Hydraulic Fluid Selection and Contamination 2-3d
  for Repair of Tubing Assemblies 4-4a
Pressure Gauge F4-114
Pressure Gauges 4-14a
Pressure Reducing Valve 4-14d
Pressure Relief Valves 4-14c
Pressure Switch, Piston-Type F4-115

INDEX - CONT

VOLUME XX

Subject — **Paragraph Figure, Table Number**

P - Continued

Pressure Switches 4-14b
Pressure-Actuated Sequence Valve F4-130
Pressure-Reducing Valve F4-117
Pressures, Proof Test, High-Pressure Teflon Hose Assemblies T4-30
Pressures, Proof Test, Medium-Pressure Teflon Hose Assemblies T4-23
Printed-Symbol Identification Tape F4-1
Priority Valve F4-131
Procedures, for Use of Test Stands 4-20b
Proof Test and Operating Pressure (psi) for MIL-H-7061 ..... T4-31
Proof Test Pressures, High-Pressure Teflon Hose Assemblies T4-28
Proof Test Pressures, Medium-Pressure Teflon Hose Assemblies T4-23
Proof Test Torque Values MS Flared Swivel Nut Fittings
(Reference AND10064) T4-20
Proof Testing of Flexible Hose Assemblies 4-5f
Properly Burred Tube F4-9
Pump Assembly, Kellogg Stroke Reduction F4-109
Pump, Constant Volume, Bent-Axis F4-101
Pump, Constant Volume, Foot Valve F4-104
Pump, Constant Volume, (Piston Installation) F4-102
Pump, Constant Volume, (Piston Operation) F4-103
Pump, Hand, Double-Action F4-111
Pump, Hand, Test Circuit F4-112
Pump, Kellogg Stroke Reduction (Reduction Output) F4-110
Pump, Stratopower Effective Stroke (Full Flow) F4-105
Pump, Stratopower Effective Stroke (Zero Flow) F4-106
Pump, Vickers Stroke Reduction (Full Flow) F4-108
Pump, Vlckers Stroke Reduction (Zero Flow) F4-107
Pumps and Motors 4-13
Hand Pumps 4-13c
Hydraulic Motors 4-13d
Maintenance of Power Pumps 4-13b
Power Pumps 4-13a
Purpose (of Manual) 1-1

Q

Qualities of Hydraulic Fluid 2-1a
Quick-Disconnect Couplings 4-10
Inspection 4-10b
Installation 4-10a

INDEX - CONT

VOLUME XX

Subject	Paragraph Figure, Table Number
R	
Rachet Valve	4-16h
Rachet Valve (Moving)	F4-137
Rachet Valve (Static)	F4-136
Radial Cam-Operated Selector Valve	F4-124
Recommended (Permaswage) Repair Methods, Failure Modes and	F4-79
Regulating Pressure, Devices for	4-14
Relief Valve, System	F4-116
Repair	
of High-Pressure Tubing Assemblies	4-4c
of Low-Pressure Tubing Assemblies	4-4b
of Tubing Assemblies	4-4
Repair of Low-Pressure Tubing	F4-30
Repair of Tubing Assemblies	4-4
Precautions	4-4a
Repair of High-Pressure Tubing Assemblies	4-4c
Repair of Low-Pressure Tubing Assemblies	4-4b
Template	4-4d
Repairing High-Pressure Tubing	F4-33
Replacement of Flexible Hose	4-5c
Reservoir, Fluid-Pressurized (Pressurized)	F4-93
Reservoir, Fluid-Pressunzed (Unpressurized)	F4-92
Reservoir with Baffles, Fins and Finger Strainer	F4-91
Reservoir with Filter Elements	F4-94
Reservoirs, Hydraulic	4-11
Responsibility (for Hydraulic Shop Rules)	3-1a
Reversing Spiral of Teflon Backup Ring	F4-74
Rings, Backup	4-8
Rotary-Type, Closed-Center Selector Valve	F4-120
Rotor Blade Brake System	F4-159
S	
Safety (in Use of Test Stands)	4-20a
Scope (of Manual)	1-2
Selector Valve A Closed	F4-145
Selector Valve B Open	F4-146
Selector Valve C Open	F4-147
Selector Valve, In-Line Cam-Operated (Actuator Extending)	F4-123
Selector Valve, In-Line Cam-Operated (Actuator Retracting)	F4-122
Selector Valve, Radial Cam-Operated	F4-124
Selector Valve, Rotary-Type, Closed-Center	F4-120
Selector Valve, Spool-Type, Open-Center (Closed)	F4-121

INDEX- CONT

VOLUME 2

Subject — **Paragraph, Figure, Table Number**

S - Continued

Selector Valves 4-16a
Self-Sealing, Aromatic-Resisting, Hose MIL-H-7061 ..... F4-38
Self-Sealing, Hose for Aromatic Fuel, MIL-H-7061 ..... 4-5k
Separable Fittings, Utilizing 0.150 Tube End Gap Tolerance on F4-89
Sequence Valve, Landing Gear System Using Mechanically Actuated F4-129
Sequence Valve, Pressure-Actuated F4-130
Sequence Valves 4-16d
Servicing Filters 4-12f
Shaped Fittings, Utilizing 0.300 Inch Tube End Gap Tolerance on F4-92
Shock Strut, Complex (Metering Pin) F4-171
Shock Strut, Complex (Plunger) F4-172
Shock Strut, Floating Pin F4-173
Shock Strut, Simple F4-170
Shock Struts 4-19b
Shop Equipment, Maintenance 3-2
Shop Housekeeping (Hydraulic Shop) 3-1b
Shop Rules, General (Hydraulic Shop) 3-1
Shop Safety (Hydraulic Shop) 3-1c
Shop Tools and Materials (Hydraulic Shop) 3-1d
Shuttle Valve, Floating-Piston F4-132
Shuttle Valves 4-16f
Simple Check Valve F4-127
Simple Master Cylinder F4-148
Simple Shock Strut F4-170
Single Backup Ring Installation F4-75
Single Flared Tubing, Dimensions for F4-7
Single-Action Actuating Cylinder F4-133
Size (of Hydraulic Systems) 2-2d
Solenoid-Actuated Control Valve (De-energized) F4-126
Solenoid-Actuated Control Valve (Energized) F4-125
Solid Color Band Identification F4-2
Spherical Accumulator F4-119
Spherical Air Cylinder F4-95
Spool-Type, Open-Center, Selector Valve (Closed) F4-121
Stabilizer Bar with Vane Dampers F4-169
Standard Union Fittings, Tube Insertion Limits when Using F4-90
Standard Union Fittings, Utilizing 0.300 Inch Tube End Gap Tolerance with F4-87
Standpipes 4-11g
Steel Protective Dust Cap F4-53
Steel Protective Dust Plug and Moisture Seal F4-52
Storage of Hose and Hose Assemblies 4-5b
Storage (55-Gallon Drums) 3-3a

INDEX- CONT

VOLUME 2

Subject	Paragraph, Figure, Table Number
S - Continued	
Straight Pipe Thread	4-3c
Straight Thread and Pipe Thread	F4-26
Stratopower Effective Stroke Pump (Full Flow)	F4-105
Stratopower Effective Stroke Pump (Zero Flow)	F4-106
Stretching Teflon Backup Ring	F4-72
Support Clamp Sizes (for Use with MIL-H-27267 Hose of Teflon)	T4-24
Support Clamp Sizes (for Use with MIL-H-38360 Hose of Teflon)	T4-29
Support, of Flexible Hose	4-6e
Swage Tool Assembly Showing Lower Die Block Assembly and Position of Fitting Locator, Basic	F4-84
Swaged Joint, Checking, with D9892 Inspection Gauge	F4-85
Swaged Tubing Repairs	4-9
Application	4-9a
Inspection of Swaged Joint	4-9g
Swaging Operation	4-9f
Technique	4-9b
Tube Cutting	4-9c
Tube Debumng	4-9d
Tube End Preparation	4-9e
Swaging, Fitting Dimensions After	T4-39
Swaging Operation	4-9f
Synthetic-Base Fluid MIL-H-83282	2-3c
System Flushing	2-4b
System Relief Valve	F4-116
Systems and Repairs, Tubing	4-2
T	
Tallwheel Liquid Spring	T4-176
Technique, Swaged Tubing Repairs	4-9b
Teflon Hose Assembly Procedure, Medium-Pressure	F4-48
Teflon Hose Cutoff Factures (in Inches)	F4-23
Teflon Hose, Field Disassembly of	F4-47
Teflon Hose Installation Procedures, Right and Wrong	F4-49
Temperature Protection and Installation of Flexible Hose	4-6g
Template for Repair of Tubing Assemblies	4-4d
Test Pressures, Operating, Proof, and Burst, for AN6270 Hose Assembly using MIL-H-5593 Low Pressure Hose	T4-19
Test Pressures, Operating, Proof, and Burst, for MIL-H-83796 Medium Pressure Hose Assembly	T4-17
Test Pressures, Operating, Proof, and Burst, for MIL-H-83797 Medium Pressure Hose	T4-18
Test Pressures, Operating, Proof, and Burst, for MS28741 Medium	

INDEX- CONT

VOLUME 2

Subject — **Paragraph, Figure, Table Number**

T - Continued

Test Pressures, Operating, Proof, and Burst, for MS28741 Medium Pressure Hose Assemblies, Using Single Wire Braid Hose, Military Specification MIL-H-8794 ..... T4-16
Test Pressures, Operating, Proof, and Burst, for MS28759 and MS28762 Hose Assemblies T4-15
Test Stands, Use of 4-20
Tetrafluoroethylene Hose MIL-F-27272 (In Inches) T4-21
Tetrafluoroethylene Hose MIL-H-38360 (in Inches) T4-26
Theory and Basic Principles of Pneudraulics 2-1
Theory of Operation, Hydraulic Reservoirs ..... 4-11 b
Theory of Operation, Hydraulics System Filters 4-12b
Tightening Hose Clamp with Socket F4-32
Tool, Flaring F4-10
Torque Values for AN924 Jamnut Used On Fittings T4-8
Torque Values for Boss Installation T4-7
Torque Values for MS21921 Coupling Nut T4-5
Torque Values, Hydraulic Tubing B-Nut (AN818) T4-2
Torque Values, Installation, MS Flared Swivel T4-25
Torque Values, MS Flared Swivel Nut Fittings (Reference AND10064), Installation T4-33
Torque Values, MS Flared Swivel Nut Fittings (Reference AND10064), Proof Test T4-20
Torque Values, MS Turns and F4-21
Transporting Fluid to Aircraft 3-3d
Troubleshooting Actuators T4-40
Troubleshooting Guide for Inspection Checking (of Swaging) T4-38
Troubleshooting Wheel Brake Systems T4-41
Tube and Fitting Alignment T4-13
Tube Bend Data Drawing F4-6
Tube Bending Machine F3-4
Tube Bending Machine, Hand-Operated 3-2e
Tube Bends, Acceptable and Unacceptable F4-5
Tube Cutter, Cutting Tube with F4-3
Tube Cutting 4-9c
Tube Deburnng 4-9d
Tube End Marking F4-83
Tube Insertion Band Location T4-37
Tube Insertion Limits when Using Standard Union Fittings F4-90
Tube Material and Maximum Operating Pressure Limitations (psi) for Permaswage Repair with D10000 Senes Tooling T4-35
Tube, Properly Burred F4-9
Tube Thickness and Burst Pressure, Determining T4-11
Tubing Alignment F4-20

INDEX- CONT

VOLUME 2

Subject	Paragraph, Figure, Table Number
T- Continued	
Tubing Assemblies, Repair of	4-4
Tubing Damage	4-2c
Tubing End Clearance for Low-Pressure Tubing-Repair	F4-31
Tube Fittings	F4-15
Tubing Identification	4-2b
Tubing Repairs, Swaged	4-9
Tubing Systems and Repairs	4-2
Beaded Tubing Joints	4-2h
Bending Tubing	4-2e
Cleaning Tubing	4-2g
Cutting Tubing	4-2d
Flaring Tubing	4-2f
Installation of Beaded Tubing	4-2j
Installation of Flared Tubing	4-2i
Tubing Damage	4-2c
Tubing Identification	4-2b
Types	4-2a
Tubing with Double Lap Flare	F4-11
Tubing-to-Tubing Connections	F4-22
Two-Stage Fluid Filters	4-12d
Types of Accumulators	4-15a
Types of Hydraulic Fluid Used in Army Aircraft	2-3
Petroleum-Base Fluid	2-3b
Precautions	2-3d
Synthetic-Base Fluid MIL-H-83282	2-3c
Vegetable-Base Fluid	2-3a
Types of Hydraulic Reservoirs Used in Hydraulic Systems	4-11a
Types of Pneudraulic Systems	4-17
Types of Tubing Systems and Repairs	4-2a
Typical Gasoline Engine-Driven Hydraulic Test Stand	F3-2
Typical Hydraulic Hose Testing Unit	F3-3
Typical Hydraulic System Filler and Bleeder	F3-1
Typical Master Gauge Unit	F3-5
Typical Styles of Permaswage Fittings	F4-78
U	
Universal Fittings AN832, AN833, AN834 High Pressure	4-3e
Universal Fittings AN832, AN833, AN834 Low Pressure	4-3d
Use of Air in Hydraulic Systems	2-1f
Use of Dust Plugs, Dust Caps, and Moisture Seals	4-5l
Use of Test Stands	4-20

INDEX- CONT

VOLUME 2

Subject	Paragraph, Figure, Table Number
U - Continued	
Procedures	4-20b
Safety	4-20a
Uses of Filter in Hydraulic Systems	4-12a
Uses of Hydraulic Systems in Army Aircraft	2-2
Ease of Installation	2-2c
Ease of Operation	2-2b
Efficiency	2-2a
Lubrication	2-2e
Size	2-2d
Utilizing 0.150 Inch Tube End Gap Tolerance on Separable Fittings	F4-89
Utilizing 0.300 Inch Tube End Gap Tolerance on Shaped Fittings	F4-88
Utilizing 0.300 Inch Tube End Gap Tolerance with Standard Union Fittings	F4-87
V-Ring Packings	4-7c
V-Ring Packings in Vanous Positions of Assembly	F4-71
Valve A, Closed	F4-145
Valve B, Open	F4-146
Valve C, Open	F4-147
Valve, Pressure-Reducing	F4-117
Valve, Priority	F4-131
Valve, Ratchet (Moving)	F4-137
Valve, Ratchet (Static)	F4-136
Valve, Priority	F4-131
Vane Damper	F4-166
Vane Damper Cross Section	F4-167
Vane, Dampers, Nose Landing Gear	F4-168
Vane, Dampers, Stabilizer Bar	F4-169
Vegetable-Base Fluid (Hydraulic)	2-3a
Vickers Stroke Reduction Pump (Full Flow)	F4-108
Vickers Stroke Reduction Pump (Zero Flow)	F4-107
Volume, Length, and Area, Computing	F2-2
W	
Wheel Brake Assemblies	4-18b
Wheel Brake Systems	4-18a
Wheel Brake Systems, Troubleshooting	T4-41
Withdrawing Fluid from Drum	T3-3c

INDEX- CONT

VOLUME 3

Subject	Paragraph, Figure, Table Number
A	
Aeroquip Corporation Series 3700 and 3750 Quick Thread Couplings	2-5h
Auxiliary (Booster) Fuel Pump	F2-4
AVGAS Identification	T2-2
B	
Ball Lock-Type Coupling	F2-19
Bladder-Type Fuel Cells, Serviceable Limits	T2-6
Bridging, Sealant	F2-12
C	
Can and Drum Marking	F2-23
Characteristics of Vaporization	F2-1
Clamp Location for Tube Bends	F2-3
Closed-Circuit Fuel Receiver Installation	F2-20
Closed-Circuit Refueling Receptacles	2-51
Cold Weather Maintenance, Oil Systems	3-61
Consumable Materials	1-3
Contaminant Characteristics (of Fuel), Visual	T2-3
Contamination of Fuels	2-4
Contamination Prevention	2-4e
Microbiological Growths	2-4c
Solids	2-4b
Uses of Additives to Prevent Microbiological Growths	2-4d
Water	24a
Contamination Prevention (for Fuels)	2-4e
Coupling	
Ball Lock -Type	F2-19
Full Gnp PustuPull-TypeF	2-17
Inst-O-Matic Push/Pull Type	F2-16
Quick-Threading/Indicating Type	F2-15
Screw-Type	F2-14
Straight Flow Balin Valve-Type	F2-18
Covered Storage of Oils	3-7a
D	
DA Form 1804 (Petroleum Sample)	F2-22
Drain Containers (Fuel Systems), Safety Precautions and Procedures	2-2e
Dry-Sump Lubrication System for Reciprocating Engines	F3-3
Dry-Sump Lubrication System for Turbine Engines	F3-5

INDEX- CONT

VOLUME 3

Subject	Paragraph, Figure, Table Number
E	
Engine Oils	
Reciprocating	T3-1
Turbine	T3-2
Engine-Driven Fuel Pump	F2-5
F	
Fasteners	F2-9
Fillet Seal Deflection	F2-13
Filter, Oil	F3-6
Float Switch Unit	F2-7
Float Switches	2-5e
Flushing Oil Systems	3-6j
Fuel Cells and Tanks	2-5f
Fuel Identification	2-3
Aviation Gas	2-3b
Turbine Fuels	2-3a
Fuel Lines	2-5a
Fuel Lines and Drains, Safety Precautions and Procedures	2-2a
Fuel Pump	
Auxiliary	F24
Engine-Driven	F2-5
Fuel Pumps	2-5b
Fuel Receiver Installation (Closed-Circuit)	F2-20
Fuel Strainers	2-5d, F2-6
Fuel Sumps	2-5c
Fuel System Maintenance	2-5
Aeroquip Corporation Series 3700 and 3750 Quick Thread Couplings	2-5h
Closed-Circuit Refueling Receptacles	2-5i
Float Switches	2-5e
Fuel Cells and Tanks	2-5f
Fuel Lines	2-5a
Fuel Pumps	2-5b
Fuel Strainers	2-5d
Fuel Sumps	2-5c
Fuel System Troubleshooting	2-5j
Testing Fuel Systems and Tanks/Cells for Leaks	2-59g
Fuel System Schematic, Typical	F2-21
Fuel System Troubleshooting	2-5j
Fuel System Troubleshooting, Typical, Chart	T2-9
Fuel Systems	
Contamination of Fuels	2-4
Fuel Identification	2-3

INDEX- CONT

VOLUME 3

Subject	Paragraph, Figure, Table Number
F - Continued	
Fuel System Maintenance	2-5
General	2-1
Handling and Storage of Fuels	2-6
Safety Precautions and Procedures	2-2
Fuel Tanks, Integral	F2-8
Full Gnp Push/Pull-Type Coupling	F2-17
G	
Gear-Type Oil Pump	F3-13
General	
Fuel Systems	2-1
Oil Systems	3-1
H	
Handling and Storage of Fuels	2-6
Marking	2-6c
Receipt	2-6a
Storage Practices	2-6b
Handling and Storage of Oils	3-7
Covered Storage	3-7a
Outside Storage	3-7b
Heat Exchanger Cooler, Turbine Engine Fuel Oil	F3-1
I	
Identification of AVGAS	T2-2
Identification of Oils	3-4
Reciprocating Engines	3-4a
Turbine Engines	3-4b
Inspection Valves, Quick-Disconnect Coupling	T2-8
Inst-O-matic Push/Pull-Type Coupling	F2-16
Integral Fuel Tanks	F2-8
J	
Jet Fuel Used in Army Aircraft (MIL-T-5624), Critical Characteristics and Specification Requirements for	T2-1

INDEX- CONT

VOLUME 3

Subject	Paragraph, Figure, Table Number
L	
Leak Path Examples, Long Leak	F2-10
Leaks, Fastener	F2-9
Long Leak Path Examples	F2-10
Lubrication System for Reciprocating Engines	
Dry-Sump	F3-3
Wet-Sump	F3-2
Lubrication System for Turbine Engines	
Dry-Sump	F3-5
Wet-Sump	F34
M	
Magnetic Plugs and Chip Detectors	3-6f
Main Oil Strainers	F3-8
Marking, Can and Drum	F2-23
Marking (Fuel Containers)	2-6c
Microblological Growths (Contaminating Fuels)	2-4c
Micron Particle Size	F2-2
Mixing Ratios (for Dyes)	T2-7
Multiple Leak Paths (Single Leak Source)	F2-11
O	
Oil Contamination	3-5
Prevention	3-5c
Solids	3-5b
Use of Brayco 599 3-5d	
Water	3-5a
Oil Cooler, Reciprocating Engine	F3-10
Oil Coolers, Maintenance	3-6g
Oil Fitter	F3-6
Oil Filter, Spacers and Screens Type	F3-7
Oil Filters, Maintenance	3-6c
Oil Jets, Maintenance	3-61
Oil Lines, Maintenance	3-6b
Oil Pressure Relief Valves	F3-12
Oil Pump	F3-13
Oil Screen Types	F3-9
Oil Screens, Maintenance	3-6d
Oil Systems	
General	3-1
Handling and Storage of Oils	3-7
Identification of Oils	3-4

INDEX- CONT

VOLUME 3

Subject	Paragraph, Figure, Table Number
O - Continued	
Oil Contamination	3-5
Oil Systems Maintenance	3-6
Preservation	3-8
Safety Precautions and Procedures	3-2
Types of Oil	3-3
Oil Systems Maintenance	3-6
Cold Weather Maintenance	3-61
Flushing Oil Systems	3-6
Magnetic Plugs and Chip Detectors	3-6f
Oil Coolers	3-6g
Oil Filters	3-6c
Oil Jets	3-6i
Oil Lines	3-6b
Oil Screens	3-6d
Oil Tanks	3-6e
Pressure Devices	3-6h
Prevention of Sludge Buildup	3-6k
Types of Oil Systems	3-6a
P	
Particle Size, Micron	F2-2
Personal Precautions and Procedures, Fuel Systems	2-2f
Petroleum Sample Form DA 1804	F2-22
Preservation of Oil Systems	3-8
Pressure Devices	3-6h
Prevention (of Oil Contamination)	3-5c
Prevention of Sludge Buildup	3-6k
Purpose of Manual	1-1
Q	
Quick-Disconnect Coupling Inspection Valves	T2-8
Quick Threading/Indicating Type Coupling	F2-15
R	
Ratios (for Dye Mixing)	T2-7
Receipt (of Fuel Containers)	2-6a
Reciprocating Engine Oil Cooler	F3-10
Reciprocating Engines, Identification of Oils for	3-4a
Relief Valves, Oil Pressure	F3-12

INDEX- CONT

VOLUME 3

Subject	Paragraph, Figure, Table Number
Safety Precautions and Procedures, Fuel Systems	2-2
Drain Containers	2-2e
Fuel tines and Drains	2-2a
Personal	2-2f
Tool Boxes	2-2c
Tools	2-2b
Work Stands	2-2d
Safety Precautions and Procedures, Oil Systems	3-2
Safety Precautions, Fuel Storage	T2-10
Scope of Manual	1-2
Screen, Oil, Type	F3-9
Screw-Type Coupling	F2-14
Seal Deflection, Fillet	F2-13
Sealant Bridging	F2-12
Self Sealing Fuel Cells, Serviceable Limits	T2-5
Serviceable Limits (Bladder-Type Fuel Cells)	T2-6
Serviceable Limits (Self-Sealing Fuel Cells)	T2-5
Single Leak Source, Multiple Leak Path	F2-11
Solids (Contaminating Fuel)	2-4b
Solids (Contaminating Oil)	3-5b
Spacers and Screens Oil Filter	F3-7
Spacing, Support Clamp	T2-4
Storage Practices, Fuel	2-6b
Straight Flow Ball Valve Type Coupling	F2-18
Support Clamp Spacing	T2-4
Surge Valve Example	F3-14

T

Testing Fuel Systems and Tanks/Cells for Leaks	2-5g
Tool Box (Fuel Systems), Safety Precautions and Procedures	2-2c
Tools (Fuel Systems), Safety Precautions and Procedures	2-2b
Tube Bends, Clamp Location for	F2-3
Turbine Engine Fuel Oil Heat Exchanger Cooler	F3-11
Turbine Engine, Identification of Oils for	3-4b
Turbine Engine Oil Use Temperature Chart	F3-1
Turbine Engine Oils	T3-2
Types of Oil Systems	3-6a
Types of Oils	3-3
Typical Fuel System Schematic	F2-21
Typical Fuel System Troubleshooting Chart	T2-9

INDEX- CONT

VOLUME 3

Subject	Paragraph, Figure, Table Number
U	
Use of Brayco	3-5d
Use Temperature Chart, Turbine Engine Oil	F3-1
Uses of Additives to Prevent Microbiological Growth (in Fuels)	2-4d
V	
Valve, Surge, Example of	F3-14
Vaporization Characteristics, Fuel	F2-1
Visual Contaminant Characteristics, Fuel	T2-3
W	
Water (Contamination of Fuel)	2-4a
Water (Contamination of Oil)	3-5a
Wet-Sump Lubrication System for Reciprocating Engines	F3-2
Wet-Sump Lubrication System for Turbine Engines	F3-4
Work Stands (Fuel Systems), Safety Precautions and Procedures	2-2d

INDEX- CONT

VOLUME 4

Subject	Paragraph, Figure, Table Number
A	
AC Meter	2-6h
Airspeed Indicator	F4-11
Test Tolerances	T4-1
Alternating Current, Basic Principles and Theory for	2-3
Alternating Current, Cycle	F2-2
Altimeter	4-3g, F4-13
Ammeter	2-6d
Automatic Wire Marking Machines	F3-2
B	
B-16 Master Sighting Compass Alignment Method	F4-23
Basic Circuits	2-5
Compound	2-5c, F2-7
Parallel	2-5b, F26
Senes	2-5a, F2-5
Basic Principles and Theory for Alternating Current	2-3
Basic Principles and Theory for Direct Current	2-2
Bonds	3-1 k
C	
Centigrade-Fahrenheit Conversion Chart	T4-13
Circuit Breakers	3-1 n
Circuit, Thermocouple	F3-13
Circuits, Basic	2-5
Cleaning Apparatus, Mercury	F4-3
Compass	
Alignment, B-16 Master Sighting Method	F4-23
Correction Card	F4-20
Rose	F4-21
Components, of Electrical Systems	3-4
Compound Circuits	2-5c, F2-7
Conduits	3-1j
Connectors	
Inspection of	3-3b
Installation of (on Wires)	3-3c
MS	F3-4
Potting	F3-7
Rectangular Shell	F3-6
Subminiature	F3-5
Consumable Materials	1-3

INDEX- CONT

VOLUME 4

Subject	Paragraph, Figure, Table Number
C - Continued	
Continuity Tester	2-6b, F2-8
Copper Wire Strippers	T3-1
Correction Card, Compass	F4-20
Counter Drum Pointer Altimeter	F4-13
Friction Stop and Jump Error	T4-8
Pressure Altitude Difference	T4-10
Scale Error	T4-6
Static Friction Error (Vibrator Inoperative)	T4-9
Test Tolerances	T4-7
Cycle of Alternating Current	F2-2
D	
D'Arsonval Meter	2-6c, F2-9
DD Form 1613 (Pilot Compass Correction Card)	F4-22
Dead Weight Testers	4-2d
Direct Current Wave Form	F2-1
Direct Current, Basic Principles and Theory for	2-2
Direct Reading Pressure Indicator	4-3h
Tolerances	T4-11
Dual Synchronous Rotor Tachometer Wiring Diagram (Grounded Two-Wire System)	F4-17
Dual Synchronous Rotor Tachometer Wiring Diagram (Ungrounded Three-Wire System)	F4-16
E	
Electrical Connectors and Common Plugs, Installation of	3-3
Electrical Liquid Indicating Systems and Indicators	4-3q
Electrical Resistance Temperature Indicators	4-3k
Electrical System Components	3-4
Built-In Test Equipment	3-4j
Electronic Control Units	3-4k
Generators	3-4d
Ignition Systems	3-4n
Inverters	3-4g, F3-9
Lighting Systems	3-40
Motors	3-4l
Overvoltage Protection System	34b
Parallel Generators	3-4c
Relays	34f
Starters	3-4h
Storage Battery	34e

INDEX- CONT

VOLUME 4

Subject	Paragraph, Figure, Table Number
E - Continued	
Switches	3-4i
Thermocouples	3-4m
Voltage Regulators	3-4a
Electrical System Troubleshooting	3-2
Electrodynamic Meters	2-6i
Equipment, Measuring	2-6
Equipment Safety	
Electric Shop	2-1c
Instrument Shop	4-1c
F	
Fahrenheit-Centigrade Conversion Chart	T4-13
Fire Safety	
Electric Shop	2-1d
Instrument Shop	4-1d
Frequency Meters	2-6m
Friction Stop and Jump Error, Counter Drum Pointer Altimeter	T4-8
Friction Test Tolerances, Three Pointer Altimeter	T44
Fuse and Fuse Holders	3-1h
G	
Gauge, Wire	F3-1
General Shop Rules, Electric Shop	2-1
Equipment Safety	2-1c
Fire Safety	2-1d
Maintenance of Shop Equipment	2-1e
Responsibility	2-1a
Shop Housekeeping	2-1b
General Shop Rules, Instrument Shop	4-1
Equipment Safety	4-1c
Fire Safety	4-1d
Responsibility	4-1a
Shop Housekeeping	4-1 b
H	
Hand Wire Marking Machine	F3-3

INDEX- CONT

VOLUME 4

Subject	Paragraph, Figure, Table Number
I	
Ignition System Troubleshooting Chart	T3-3
Indicator, Airspeed	4-3e, F4-11
Indicator Tolerances	
Direct Reading Pressure Indicator	T4-11
Remote Reading Pressure Indicator	T4-12
Inspection of Installations of Wires and Cables	3-1
Inspection of Instrument Systems	4-3a
Inspection Requirements for Installations of Wires and Cables	3-1a
Inspection Requirements, Instruments and Instrument Systems	4-3b
Installation Inspection of Wires and Cables	3-1
Bonds	3-1 k
Circuit Breakers	3-1 n
Conduits	3- j
Fuses and Fuse Holders	3-1 h
Inspection Requirements	3-1a
Junctions	3-1l
Kapton Wiring	3-1o
Marking of Wires with Marking Machines	3-1f
Replacement Criteria	3-1 b
Splices	3-11
Terminals and Terminal Blocks	3-1g
Toggle Switches	3-1 m
Wire Identification	3-1d
Wire Sizes	3-1 c
Wire Stripping	3-1e
Installation of Electrical Connectors and Common Plugs	3-3
Inspection of Connectors	3-3b
Installation of Connectors on Wires	3-3c
Types of Connectors	3-3a
Instruments and Instrument System Maintenance	4-3
Airspeed Indicators	4-3e
Altimeters	4-3g, F4-13
Direct Reading Pressure Indicators	4-3h
Electrical Liquid Indicating Systems and Indicators	4-3q
Electrical Resistance Temperature Indicators	4-3k
Inspection of Instrument Systems	4-3a
Inspection Requirements	4-3b
Magnetic Compass	4-3o, F4-19
Outside Air Temperature Gauges	4-3m
Pitot Static System	4-3c, F4-7
Pitot Static System Heater	4-3d
Position Indicating Systems and Indicators	4-3r
Remote Indicating Compass	4-3p

INDEX – CONT

VOLUME 4

Subject	Paragraph, Figure, Table Number
I – Continued	
Remote Reading Pressure Indicators	4-3i
Repair and Replacements	4-3s
Tachometer Systems	4-3j
Thermocouple Temperature Indicators	4-3l
Vacuum System and Instrument Testing	4-3n
Vertical Speed Indicators	4-3f, F4-12
Inverter	F3-9
J	
Jetcal System Tester	4-2f
Junctions	3-1l
K	
Kapton Wiring	3-1o
L	
Leak Test Connections	
Pitot	F4-8
Static	F4-9
Lighting System Troubleshooting Chart	T3-4
M	
Magnetic Compass	4-3o, F4-19
Maintenance of Instruments and Instrument Systems	4-3
Maintenance of Shop Equipment, Electrical Shop	2-1e
Maintenance of Shop Equipment, Instrument Shop	4-2
Jetcal System Tester	4-2f, F4-6
Manometer	4-2a, F4-1
Pitot Static System Tester	4-2e
Scorsby Base	4-2d, F4-5
Turntable Instrument Tester	4-2c, F4-4
Vacuum Chambers	4-2b
Manometer	4-2a, F4-1
Manometer Reading Level	F4-2
Marking of Wires with Marking Machine	3-1f

M – Continued

Materials, Consumable 1-3
Measuring Equipment 2-6
Ammeter 2-6d
Continuity Tester 2-6b
D'Ars onval Meter 2-6c
Elec trodynamometer 2-6h
Frequenc y Meters 2-6k
Meter Safety Precautions 2-6l
Multim eter 2-6g
Ohmmeter 2-6f
Rec tifier Meter 2-6i
Tes t Lights 2-6a
Voltmeter 2-6e
Wattmeter 2-6j
Mercury Cleaning Apparatus F4-3
Meter, D'Arsonval 2-6c, F2-9
Meter Safety Precautions 2-6l
Microswitch F3-11
MS Connectors F3-4
Multimeter 2-6g

O

Ohmmeter 2-6f
Operational Check (of Electrical Systems) 3-2a
Outside Air Temperature Gauges 4-3m

P

Parallel Circuits 2-5b, F2-6
Pilot Compass Correction Cards, DD Form 1613 ..... F4-22
Pitot
Leak Test Connections F4-8
Static System 4-3c, F4-7
Static System Heater 4-3d
Static System Tester 4-2e
Tube F4-10
Position Indicating Systems and Indicators 4-3r
Potting Connectors F3-7
Precautions (for Troubleshooting Electrical Systems) 3-2b

INDEX - CONT

VOLUME 4

Subject — **Paragraph Figure, Table Number**

P - Continued

Pressure Altitude Difference
- Counter Drum Pointer Altimeter. T4-10
- Three Pointer Altimeter T4-5

Purpose (of Manual) 1-1

R

Reading Level, Manometer F4-2
Recommended Sizes of Marking Type T3-2
Rectangular Shell Connectors F3-6
Rectifier Meter 2-6j
Relays, Typical F3-8
Remote Indicating Compass 4-3p
- Wiring Diagram F4-24

Remote Reading Pressure Indicator 4-3i
- Tolerances T4-12

Repair and Replacements, Instruments and Instrument Systems 4-3s
Replacement Criteria for Wires and Cables 3-1b
Responslbllty
- for Electric Shop Rules 2-1a
- for Instrument Shop Rules 4-1a

Rose, Compass F4-21
Rotary-Selector Switch F3-12

S

Scale Error
- Counter Drum Pointer Altimeter T4-6
- Three Pointer Altimeter T4-3

Schematic, of Typical Electrical System F2-4
Scope (of Manual) 1-2
Scorsby Base 4-2g, F4-5
Series Circuits 2-5a, F2-5
Shop Housekeeping
- Electrical Shop 2-1b
- Instrument Shop 4-1b

Sizes of Marking Type, Recommended T3-2
Splices 3-11
Static Friction Error (Vibrator Inoperative), Counter Drum Pointer Altimeter T4-9
Subminiature Connectors F3-5
Switch
- Rotary-Selector F3-12
- Toggle F3-10

INDEX - CONT

VOLUME 4

Subject — **Paragraph Figure, Table Number**

S - Continued

Symbols, Charts, and Schematics for Wiring Diagrams 2-4
Symbols, Wiring Diagram F2-3
Synchronous Rotor Tachometer Wiring Diagram
(Grounded Two-Wire System) F4-15
Synchronous Rotor Tachometer Wiring Diagram
(Ungrounded Three-Wire System) F4-14

T

Tachometer Systems 4-3j
Tachometer Wiring Diagram
Dual Synchronous Rotor (Grounded Two-Wire System) F4-17
Dual Synchronous Rotor (Ungrounded Three-Wire System) F4-16
Synchronous Rotor (Grounded Two-Wire System) F4-15
Synchronous Rotor (Ungrounded Three-Wire System) F4-14
Terminals and Terminal Blocks 3-1g
Test Lights 2-6a
Test Tolerances
Airspeed Indicator T4-1
Counter Drum Pointer Altimeter T4-7
Three Pointer Altimeter T4-3
Tester, Continuity 2-6b, F2-8
Thermocouple Circuit F3-13
Thermocouple Temperature Indicators 4-31
Three Pointer Altimeter F4-13
Friction Test Tolerances T4-4
Pressure Attitude Difference T4-5
Scale Error T4-2
Test Tolerances T4-3
Toggle Switch F3-10
Toggle Switches 3-1m
Troubleshooting Electrical Systems 3-2
Operational Check 3-2a
Precautions 3-2b
Tube, Pitot F4-10
Turntable Instrument Tester 4-2f, F4-4
Typical Electrical System Schematic F2-4
Typical Ignition System Troubleshooting Chart T3-3
Typical Lighting System Troubleshooting Chart T3-4
Typical Relays F3-8

INDEX - CONT

VOLUME 4

Subject — **Paragraph Figure, Table Number**

V

Vacuum Chambers 4-2b
Vacuum System and Instrument Testing 4-3n
Varmeter 2-6l
Vertical System Indicators 4-3f, F4-12
Voltmeter 2-6e

W

Wattmeter 2-6k
Wave Form, of Direct Current F2-1
Wire Gauge F3-1
Wire Identification 3-1d
Wire Marking Machines
Automatic F3-2
Hand F3-3
Wire Sizes 3-1c
Wire Strippers, for Copper Wire T3-1
Wire Stripping 3-1e
Wiring Diagram, Remote Indicating Compass F4-24
Wiring Diagram Symbols, Charts, and Schematics F2-3
Wiring Diagram Symbols, Charts, and Schematics 2-4

INDEX - CONT

VOLUME 5

Subject	Paragraph Figure, Table Number
A	
Aerodynamic Balancing	2-13b
Alignment, Rotor Blade	3-14
Angle of Bend, Measuring	F2-6
Anti-Icing	2-1 b
Anti-Icing System, Typical	F2-12
B	
Balance (of Tall Rotor Blades)	3-9c
Balance Check, Three-Blade	F2-8
Balance Check, Two-Blade	F2-7
Balance, Blade	3-10
Balancing, Propeller	2-13
Bends and Twists	2-12c
Blade Balance	3-10
General	3-10a
Mass Balance Weights (Bars)	3-10b
Spanwise Balance Weights	3-10c
Tracking Weights	3-10d
Trim Tabs	3-10e
Blade Classification Data (Main Rotor Blades)	3-7d
Blade Construction (Main Rotor Blades)	3-7c
Blade Flapping Action (Vertical Plane)	F3-7
Blade Leading and Lagging (Horizontal Plane)	F3-8
Blade Tracking	2-13d
Blade Tracking, Electronic, Equipment	F3-12
Blade Tracking, Reflector	F3-13
Blade, Rotor, Repair	3-12
Blade, Rotor, Tracking	3-17, F3-11
C	
Classification, Propeller	2-5
Cleaning (of Rotors)	3-11b
Cleaning, Powertrain Components of	4-5
Collective Pitch Control	3-5b, F3-5
Components, Drive	4-4
Configurations, Helicopter	3-4
Construction (of Tail Rotor Blades)	3-9b
Consumable Materials	1-3

INDEX - CONT

VOLUME 5

Subject — **Paragraph Figure, Table Number**

C - Continued

Control System, Helicopter F3-1
Controllable Pitch Propeller 2-6b
Cyclic Pitch Control 3-5a, F3-4

D

Damaged Square Tip Repair F2-5
Damaged Tip Repair F2-4
Defects, Propeller 2-9, T2-2
Deicing 2-18c
Description, Propeller 2-6
Drive Components 4-4
- Clutches 4-4b
- Drive Shafting 4-4f
- Engine Cooling Fans 4-4d
- Freewheeling Units 4-4c
- Gearboxes 4-4a
- Rotor Brakes 4-4e

Drive Shafting 4-41, 4-5
Dynamic Balancing 2-13

E

Efficiency, Engine 2-8
Efficiency, Propeller 2-7
Electrical Deicing System, Typical F2-1
Electronic Blade Tracker 3-17b
Electronic Blade Tracking Equipment F3-12
Engine Cooling Fans 4-4d, 4-5
Engine Efficiency 2-8
- Mechanical Efficiency 2-81
- Thermal Efficiency 2-80
- Volumetnc Efficiency 2-8c

Extremely Low Frequency Vibration 3-16

F

Feathering Propeller 2-6
Fiberglass Blade Repair 3-12b
Flight Controls, Helicopter 3-5

INDEX - CONT

VOLUME 5

Subject — **Paragraph Figure, Table Number**

F - Continued

Fixed - Pitch Propeller 2-6a
Flag and Pole 3-17a
Flapping Action, Blade (Vertical Plane) F3-7
Freewheeling Units 4-4c, 4-5
Fully Articulated Rotor 3-6c
Fully Articulated Rotor Head F3-6

G

Gearboxes 4-4a, 4-5a
General (Blade Balance) 3-10a
General (Tall Rotor Hubs) 3-8a
General Shop Rules 2-2, 3-2
..... 4-2
Responsibility 2-2a, 3-2a
..... 4-2a
Shop Housekeeping 2-2b, 3-2b,
..... 4-2b
Shop Safety 2-2c, 3-2c,
..... 4-2c
Shop Tools and Materials 2-2d, 3-2d,
..... 4-2d
General, Powertrain Maintenance Practices and Procedures 4-1
General, Propeller Maintenance Practices and Procedures 2-1
General, Rotor Maintenance Practices and Procedures 3-1
Governed Propellers, Rigging 2-16
Governor, Woodward F2-10
Governors, Propellers 2-15

H

Hartzell Constant-Speed Propeller F2-2, 2-6c
Hartzell Pitch Change Mechanism F2-1
Helicopter Configurations 3-4
Single Rotor 3-4a
Tandem Rotor 3-4b
Helicopter Control System F3-1
Helicopter Flight Controls 3-5
Collective Pitch Control 3-b
Cyclic Pitch Control 3-5a
Swashplate 3-5c

INDEX - CONT

VOLUME 5

Subject	Paragraph Figure, Table Number
H - Continued	
Throttle Control	3-2d
Torque Control	3-2e
Helicopter Vibrations	3-16
Extreme Low Frequency Vibration	3-16a
Low Frequency Vibration	3-16b
Medium Frequency Vibration	3-16c
High Frequency Vibration	3-16d
I	
Icing, Propeller	2-18
Icing Types	2-18a
Inspection (of Rotors)	3-11c
Insallation (of Governors)	2-16b
Installation, Propeller	2-14
Integrated Oil Control Assembly	2-15f
L	
Low Frequency Vibration	3-16b
M	
Main Rotor Assemblies	3-6
Fully Articulated Rotor	3-6c
Rigid Rotor	3-6a
Semi-Rigid Rotor	3-6b
Main Rotor Blade Terms	T3-1
Main Rotor Blades	3-7
Blade Classification Data	3-7d
Blade Construction	3-7c
Nomenclature	3-7b
Types	3-7a
Main Rotor Hub and Blade Assembly	F3-10
Main Rotor Hub and Blade Removal	F3-9
Main Rotor Painting	3-13a
Mass Balance Weights (Bars)	3-10b
Materials, Consumable	1-3
Measuring Angle of Bend	F2-6
Mechanical Efficiency	2-8a
Medium Frequency Vibration	3-16c

INDEX - CONT

VOLUME 5

Subject — **Paragraph Figure, Table Number**

M - Continued

Metal Blade Repair 3-12a
Metal Propellers (Preservation and Storage) 2-19b
Minor Defects (in Propellers) 2-12a
Model Designation (Propellers Governors) 2-15b
Model Number, Propeller T2-1

N

Nomenclature (for Main Blades) 3-7b

O

Oil Control Plugging 2-16a
Oil Coolers 4-5g
Oil Filters 4-5c
Oil Lines 4-5b
Oil Pumps 4-5f
Oil Screens 4-5d
Operation Checks (of Governors) 2-16d

P

Painting, Rotor Blade 3-13
Pitch Change Mechanism, Hartzell F2-1
Pitch Control, Collective F3-5
Pitch Control, Cyclic F3-4
Powertrain 4-3
  Single Rotor Powertrain 4-3a
  Tandem Rotor Powertrain 4-3b
Powertrain Maintenance Practices and Procedures 4-1
Powertrain, Single Rotor 4-3a, F4
Powertrain, Tandem Rotor 4-3b, F4-2
Preservation and Storage, Propeller 2-19
Preservation and Storage, Rotor Blade 3-18
Pnnciples of Operation and Design of Rotor Systems 3-3
Procedures, Troubleshooting (Propeller System) 2-10
Procedures, Troubleshooting (Rotor Systems) 3-15
Propeller Balancing 2-13
  Aerodynamic Balancing 2-13b
  Blade Tracking 2-13d
  Dynamic Balancing 2-13c

INDEX - CONT

VOLUME 5

Subject — **Paragraph Figure, Table Number**

P - Continued

Static Balancing 2-13a
Propeller Classification 2-5
Pusher Propeller 2-5b
Tractor Propeller 2-5a
Propeller Cleaning 2-11b
Propeller defects 2-9, T2-2
Propeller Description 2-6
Controllable-Pitch Propeller 2-6b
Feathering Propeller 2-6e
Fixed-Pitch Propeller 2-6a
Hartzell Constant-Speed Propeller 2-6c
Reverse-Pitch Propeller 2-6f
Turboprop Propeller 2-6d
Propeller Efficiency 2-7
Propeller Governors 2-15
Integrated Oil Control Assembly 2-15f
Model Description 2-15b
Principles of Operation 2-15a
Single Capacity Governors 2-15c
Turbo Prop Overspeed Governors 2-15e
Turbo Prop Governors 2-15d
Propeller Icing 2-18
Anti-Icing 2-18b
Deicing 2-18c
Icing Types 2-18a
Propeller Inspection 2-11c
Propeller Installation 2-14
Propeller Maintenance Practices and Procedures 2-1
Propeller Model and Blade Designation 2-4
Propeller Model Number T2-1
Propeller Preservation and Storage 2-19
Metal Propellers 2-19b
Wood Propellers 2-19a
Propeller Removal 2-11a
Propeller Removal, Cleaning and Inspection 2-11
Propeller Cleaning 2-11b
Propeller Inspection 2-11c
Propeller Removal 2-11a
Propeller Repair 2-12
Bends and Twist 2-12c
Minor Defects 2-12a
Tip Damage 2-12b

INDEX - CONT

VOLUME 5

Subject — **Paragraph Figure, Table Number**

P - Continued

Propeller RPM Adjusting Screw F2-11
Propeller Theory 2-3
Propeller Tracking F2-9
Purpose (of Manual)..... 1-1

R

Refinishing (Rotor Blades) 3-13d
Reflector Blade Tracking F3-13
Removal (of Rotors) 3-11a
Removal, Main Rotor Hub and Blade F3-9
Repair of Surface Defects (Propeller) F2-3
Repair, Propeller 2-12
Responsibility (for General Shop Rules) 2-2a, 3-2a
..... 4-2a
Reverse-Pitch Propeller 2-6f
Rigging (of Governors)..... 2-16c
Rogging Governed Propellers 2-16
Installation 2-16b
Oil Control Plugging 2-16a
Operation Checks 2-16d
Rigging 2-16c
Rigid Rotor 3-6a
Rotor Assemblies, Main 3-6
Rotor Blade Alignment 3-14
String Method 3-14b
Telescopic Method 3-14a
Rotor Blade Painting 3-13
Main Rotor Painting 3-13a
Refinishing 3-13d
Spot Painting 3-13c
Tail Rotor Painting 3-13b
Rotor Blade Preservation and Storage 3-18
Rotor Blade Repair 3-12
Fiberglass Blade Repair 3-12b
Metal Blade Repair 3-12a
Rotor Blade Tracking 3-17, F3-11
Electronic Blade Tracker 3-17b
Flag and Pole 3-17a
Tall Rotor Tracking 3-17c
Rotor Brakes 4-4e, 4-5k

INDEX - CONT

VOLUME 5

Subject — **Paragraph Figure, Table Number**

R - Continued

Rotor Hub, Main, and Blade Assembly F3-10
Rotor Maintenance Practices and Procedures, General 3-1
Rotor Removal, Cleaning, and Inspection 3-11
  Cleaning 3-11b
  Inspection 3-11c
  Removal 3-11a
Rotor Systems, Principles of Operation and Design Features of 3-3
Rotor, Fully Articulated, Head F3-6
Rotor, Main, Blades 3-7
Rotor, Single, Configuration F3-2
Rotor, Tail, Blades 3-9
Rotor, Tail, Hubs 3-8
Rotor, Tandem, Configuration F3-3
RPM Adjusting Screw Propeller F2-11

S

Scope (of Manual) 1-2
Semi-Rigid Rotor 3-6b
Shop Housekeeping 2-2b, 3-2b, 4-2b
Shop Rules, General 2-2, 3-2, 4-2
Shop Safety 2-2c, 3-2c, 4-2c
Shop Tools and Materials 2-2d, 3-2d, 4-2
Single Capacity Governors 2-15c
Single Rotor 3-4a
Single Rotor Configuration 3-10c
Spanwise Balance Weights 3-13c
Spot Painting (Rotors) 3-13c
Square Tip, Damaged, Repair F2-5
Static Balancing 2-13a
String Method 3-14b
Surface Defects (Propeller), Repair of F2-3
Swashplate 3-5c

INDEX - CONT

VOLUME 5

Subject — **Paragraph Figure, Table Number**

T

Tail Rotor Blades 3-9
Balance 3-9c
Construction 3-9b
Trammeling 3-9d
Types 3-9a
Tail Rotor Hubs 3-8
General 3-8a
Types 3-8b
Tail Rotor Painting 3-13b
Tall Rotor Tracking 3-17c, F3-14
Tandem Rotor 3-4b
Tandem Rotor Configuration F3-3
Telescopic Method 3-14a
Terms, Main Rotor Blade T3-1
Theory, Propeller 2-3
Thermal Efficiency 2-8b
Three-Blade Balance Check F2-8
throttle Control 3-5d
Tip Damage 2-12b
Tip, Damaged, Repair F2-4
Torque Control 3-5e
Tracking Weights 3-10d
Tracking, Propeller F2-9
Tracking, Tail Rotor F3-14
Tractor Propeller 2-5a
Trammeling (of Tail Rotor Blades) 3-9d
Trim Tabs 3-10e
Troubleshooting Procedures (Propeller System) 2-10
Troubleshooting Procedures (Rotor Systems) 3-15, T3-2
Troubleshooting Procedures for Hamilton Standard 53C51-23 ..... T2-3
Troubleshooting Procedures for Hartzell HC93Z20-2C Propeller T2-5
Troubleshooting Procedures for Hartzell HCB3TN-3 Propeller T2-5
Turboprop Overspeed Governors 2-15e
Turboprop Governors 2-15d
Turboprop Propeller 2-6d
Two-Blade Balance Check. F2-7
Types (of Main Rotor Blades) 3-7a
Types (of Tail Rotor Blades) 3-9a
Types (of Tail Rotor Hubs) 3-8b
Typical Anti-Icing System F2-12
Typical Electrical Deicing System F2-13

INDEX - CONT

VOLUME 5

Subject — **Paragraph Figure, Table Number**

V

Valves 4-5e
Vibrations, Helicopter 3-16
Volumetnc Efficiency 2-8c

W

Wood Propellers (Preservation and Storage) 2-19a
Wood Propellers 2-17
Inspection Requirements 2-17a
Refinishing 2-17d
Repair 2-17c
Replacement Criteria 2-17b
Woodward Governor F2-10

INDEX – CONT

VOLUME 6

Subject	Paragraph, Figure, Table Number
A	
Acrylic Monomer and Polymer Base Adhesive, MIL-A-8576, Type II, Non-Solvent	6-2c
Acrylic Monomer and Polymer Base Adhesive, MIL-A-8576, Type II, Non-Solvent, Shelf life	T6-3
Acrylic Monomer and Polymer Base Adhesive, MIL-A-8576, Type I, Solvent Type	6-2b
Acrylic Monomer and Polymer Base Adhesive, MIL-A-8576, Type I, Solvent Type	T6-1
Adhesive and Cements	6-2
Acrylic Monomer Base Adhesive, MIL-A-8576, Type I, Solvent Type	6-2c
Cement Primer	6-21
Cement Types	6-2a
Chemigum Coating Cement	6-2d
Colored Cement	6-2e
Compos ite Adhesives	6-2m
Deic er Repair Cement	6-2k
Deicer Shoe Electrical Conducting Neoprene Surface Coat Cement	6-2f
General Purpose Synthetic Rubber Base Cement MIL-Spec MMM-1617	6-2g
Natural Base Rubber Adhesive, MIL-Spec MMM-A-139, Class 3	6-2i
Neoprene Base Synthetic Rubber Cement	6-2j
Non-Hardening Distic Brand Cement	6-2h
Other Adhesives	6-2n
Adhesives and Cements, Specific Gravity Ranges	T6-2
Adhesives, Sealants, and Cements, General	6-1
Curing	6-1d
Mixing	6-1c
Precautionary Measures	6-1a
Preparation of Surface	6-1b
Airframe Castle Nuts	F2-22
Airframe Plain Nuts	2-3j, F2-28
Alloys	
Magnesium	4-3
Steel	4-5,T4-11
Titanium	4-4
Aluminum Alloy Designation Conversions (Old To New)	T4-2
Aluminum Alloy Temper Designations	T4-3
Aluminum Alloy Types	T4-6
Aluminum Alloys	4-2
Handling	4-2b
Identific ation	4-2a
Storage	4-2c
Aluminum Alloys, Designation for Alloy Groups	T4-1
Aluminum Bolts	2-2n
Anaerobic Adhesive MIL-R-46082	6-31
Anchor Nuts, Floating	F2-17
Application Time (Room Temperature), Sealing Compound PR-1826 B1/2	T6-4

INDEX - CONT

VOLUME 6

Subject — **Paragraph Figure, Table Number**

A - Continued

Assemblies, Channel F2-19
Authority for Substitutions and Interchangeability of Material (Air Items) 1-3
AVSCOM, Responsibilities of 1-5

B

Blind Rivets 2-8
Bolt and Screw Markings T2-1
Bolt Diameter by Part Number T2-2
Bolt, Drilled Head F2-3
Bolt Head Identification 2-2d
Bolt Hole Location by Letter T2-4
Bolt Identification, Hexagon Head F2-2
Bolt Length by Dash Number T2-5
Bolt Material by Letter Preceding Dash Number T2-3
Bolt Substitution, Huck and Hi-Lok T2-6
Bolt-End Description F2-1
Bolted Joint with Oversize Hole F2-13
Bolts 2-2
- Aluminum Bolts 2-2n
- Bolt Head Identification 2-2d
- Clevis Bolts 2-2j, F2-7
- Close Tolerance Bolts 2-2g
- Drilled Head Bolts 2-2f
- External Wrenching Bolts 2-21, F2-6
- Eye Bolts 2-2k, F2-8
- Fitting Structural Bolts 2-2q
- Hexagon Head Bolts 2-2e
- Huck Bolts (Lockbolt) 2-2p
- Installation and End Description 2-2b
- Internal Wrenching Bolts 2-2h, F2-5
- Jo-Bolts 2-2o
- Locking or Safetying 2-2c
- Self-Locking Bolts 2-21, F2-9
- Substitutions for Huck, Hi-Lock, and NAS Bolts 2-2r
- Substitutions for Jo-Bolts and V-Bolts 2-2s, T2-7
- Tee-Head Bolts 2-2m

C

Camloc Fasteners 2-9b, F2-61
Castellated Nuts 2-3b

INDEX - CONT

VOLUME 6

Subject — **Paragraph Figure, Table Number**

C - Continued

Castle Nut, Airframe F2-22
Castle Nut, Shear F2-23
Cells, Fuel and Oil 3-4
Cement Primer 6-21
Cement Types 6-2a
Cements and Adhesives 6-2
Changes to Department of Army Publications, Recommended 1-6
Channel Assemblies F2-19
Characteristics of Catalyst Cured Sealants 6-3c
Characteristics of Drying Sealants 6-3b
Characteristics of Pliable Sealants 6-3a
Checknut, Plain F2-24
Checknuts 2-3c
Chemigum Coating Cement 6-2d
Cherrylock Rivets F2-56
CherryMAX Rivets F2-55
  Cross Reference (Part Number/Military Standard Part Number, CherryMAX Rivets T2-11
Clamp Identification 2-6a
Clamp, Loop-Type Bonding F2-42
Clamp, Loop-Type Support F2-45
Clamp Types 2-6b
Clamps 2-6
  Clamp Identification 2-6a
  Clamp Types 2-6b
Clamps, Hose F2-43
Clamps, Tube F2-44
Clevis Bolts 2-2j, F2-7
Clevis Pins 2-7a, F2-46
Close Tolerance Bolt, Countersunk F2-4
Close Tolerance Bolts 2-2g
Coding, Color T3-1
Color Code (for Aluminum Alloys) T4-4
Color Coding T3-1
Colored Cements 6-2e
Common Solid Shank Rivets 2-8a
Composite Adhesives 6-2m
Considerations to be Taken Before Torquing 2-18b
Consumable Items 7-2
Consumable Items List 7-3
  Consumable Items Part 1 ..... 7-3a
  Consumable Items Part 2 ..... 7-3b
Consumable Materials 1-7
Cord Identification 3-5a
Cord Inspection 3-5b

INDEX - CONT

VOLUME 6

Subject — **Paragraph Figure, Table Number**

C - Continued

Cord Storage 3-5d
Cord Testing 3-5c
Cord, Test Loads T3-2
Corrosion Resistance (of Rivets) 2-8d
Cotter Pin Installation 2-17a, F2-77
Cotter Pins 2-7g, F2-52
Countersunk Close Tolerance Bolt F2-4
Countersunk Washer F2-34
Cross Reference of Old and New Color Code (for Aluminum Alloys) T4-5
Cross Reference (Part Number/Military Standard Part Number) CherryMAX Rivets T2-11
Cure Time (Room Temperature), Sealing Compound MIL-S-8802 ..... T6-4
Curing (of Adhesives, Sealants, and Cements) 6-1d

D

Deicer Repair Cement 6-21
Deicer Shoe Electrical Conducting Neoprene Surface Coat Cement 6-2f
Description of Bolt-Ends F2-1
Designation Conversions (Old to New), Aluminum Alloy T4-2
Designation for (Aluminum) Alloy Groups T4-1
Diameter by Part Number, Bolt T2-2
Dill Lok-Skru 2-9c, F2-62
Drilled Head Bolts 2-2f, F2-3
Dzus Fasteners 2-9a, F2-60

E

Electrical Screws 2-5f
Engine Self-Locking Nut F2-20
Example of Color Marking (for Aluminum Alloys) F4-1
External Wrenching Bolts 2-2i, F2-6
Eye Bolts 2-2k, F2-8

F

Fastener, Lockring 2-15
Fasteners 2-9
- Camloc 2-9b, F2-61
- Dill Lok-Skru 2-9c, F2-62
- Dzus Fasteners 2-9a, F2-60
- Interlocking Slide 2-9e, T2-12
- Snap and Curtain 2-9d

INDEX - CONT

VOLUME 6

Subject	Paragraph Figure, Table Number
F - Continued	
Fillister Head Screws	F2-39
Fitting Identification	2-16a
Fitting Structural Bolts	2-2q
Fittings	2-16, T2-18
Fitting Identification	2-16a
Special Fitting Types	2-16b
Fitting Material Code	T2-17
Fittings, Typical	F2-76
Flat-Head Screws	F2-37
Floating Anchor Nuts	F2-17
Flush Head Jo-Bolt	F2-10
Forming Titanium and Titanium Alloys	4-5a
Fuel and Oil Cells	34
Fuel Cell Identifications	3-4a
Fuel Cell Storage	3-4b
Oil Cell Identification	3-4c
Oil Cell Storage	3-4d
Fuel Cell Identification	3-4a
Fuel Cell Storage	3-4b
G	
Gasket and Packing Identification	3-6b
Gasket and Packing Types	3-6a
Gasket and Packings	3-6
Gasket and Packing Identification	3-6b
Gasket and Packing Types	3-6a
Storage	3-6c
General	
Adhesive Sealants, and Cements	6-1
Consumable Materials	7-1
Hardware	2-1
Metals	4-1
Phenolic and Plastic Materials	5-1
Rubber Materials	3-1
General Purpose Synthetic Rubber Base Cement MIL-Spec MMM-A-1617	6-2g
General Usage (of Rivets)	2-8c
Gnp Length (for Bolts)	2-2a

INDEX - CONT

VOLUME 6

Subject — **Paragraph Figure, Table Number**

H

Handling of Aluminum Alloys 4-2b
Hardware General 2-1
Heat Treatment of Rivets 2-8f
Helical Insert and Tools Data T2-15
Helical Insert National Fine Thread Sizes T2-14
Helical Insert Part Numbers T2-13
Helical Thread Inserts 2-11
- Insert Tolerance 2-11c
- Inspection Criteria for Helical Springs 2-11d
- Installation of Helical Insert 2-11e
- Installation of Spark Plug Helical Insert 2-11h
- Installation of Twinsert 2-11i
- Oversize Insert and Twinsert Kits 2-11k
- Removal of Helical Insert 2-11f
- Removal of Twinsert 2-11j
- Types 2-11a

Hexagon Head Bolt Identification F2-11
Hexagon Head Bolts 2-2e
Hi-Shear Rivets 2-8h, F2-54
High Tensile Washer F2-33
Hinge Pins 2-7f
Hole Location by Letter, Bolt T2-4
Hose Clamp F2-43
Huck and Hi-Lock Bolt Substitution 12-6
Huck Bolts (Lockbolt) 2-2p
Huck Rivet F2-57

Identification
- of Aluminum Alloys 4-2a
- of Hose F3-1
- of Magnesium Alloys 4-3a, T4-7
- of Nuts 2-31
- of Phenolic Compositions 5-2a
- of Plastic Materials 5-3a, T5-1
- of Rubber Materials T3-3
- of Steel T4-10
- of Steel Alloys 4-4a
- of Steels, SAE Numbers Used in T4-8
- of Tie Rods 2-13a
- of Titanium and Titanium Alloys 4-5c

Insert Tolerance (for Helical Inserts) 2-l11c
Inspection Criteria for Helical Springs 2-11d

INDEX - CONT

VOLUME 6

Subject — **Paragraph Figure, Table Number**

I - Continued

Inspection of Rubber Materials 3-1b
Inspection of Titanium and Titanium Alloys 4-5b
Installation Data, Spacer F2-69
Installation of Helical Insert 2-11e
Installation of Spark Plug Helical Insert 2-11h
Installation of Twinsert 2-11i, F2-66
Installation, Stud F2-65
Installation, Stud and Grommet F2-59
Installing New Stud 2-10b
Interlocking Slide Fasteners 2-9e, T2-12
Internal Wrenching Bolts ..... 2 -2h, F2-5
Internal Wrenching Nuts 2-3h

J

Jamnuts 2-3d
Jo-and V-Bolts Substitution 22-2s, T2-7
Jo-Bolts 2-20
    Flush Head F2-10
    Hexagon Head F2-11
    Millable Head F2-12
Joint with Oversize Hole, Bolted F2-13

L

Length by Dash Number, Bolt T2-5
Length Measurement (of Screws) 2-5b
Light Hexagon Nuts 2-3e, F2-25
Locking of Safetying Bolts 2-2b
Lockpins 2-7e, F2-51
Lockring F2-74
Lockring Fastener 2-15
Lockring Principle F2-75
Lockwasher, Spit F2-30
Lockwashers 2-46
Lockwashers, Teeth-Type F2-31
Lockwire Installation 2-17b
Lockwiring Oil Caps, Drain Cocks, and Valves F2-79
Lockwiring Screws, Nuts, and Bolts F2-78
Lockwiring, Speed Rig F2-81
Lockwiring Turnbuckes 2-17f
Loop-Type Bonding Clamp F2-42
Loop-Type Support Clamp F2-45

INDEX - CONT

VOLUME 6

Subject	Paragraph Figure, Table Number
M	
Machine Screws	F2-38
Magnesium Alloys	4-3
Identification	4-3a, T4-7
Storage	4-3c
Testing.	4-3b
Maintenance Activities, Responsibility of	1-4
Marking Steel Alloys	4-4b
Marking Titanium Alloys	4-5d
Markings, Bolt and Screw	T2-1
Material, by Letter Preceding Dash Number, Bolt	T2-3
Materials, Consumable	1-7
Materials Used in Fabrication (of Rivets)	7-1
Metals, General	4-1
Millable Hexagon Head Jo-Bolt	F2-12
Minimum Breakaway Torque for Used All-Metallic and Nonmetallic Self-Locking Nuts	T2-8
Mixing (Adhesives, Sealants, and Cements)	6-1 c
N	
National Fine Thread Sizes (for Helical Inserts)	T2-14
Natural Rubber Adhesive, MIL-Spec MMM-A-139, Class 3	6-2i
Neoprene Base Synthetic Rubber Cement	6-2j
Non-Hardening Distic Brand Cement	6-2h
Numbering System, CherryMAX Rivets	T2-10
Nut Installation Limits, Self-Locking	F2-21
Nuts	2-3
Airframe Plain Nuts	2-3j, F2-28
Castellated Nuts	2-3b
Checknuts	2-3c
Identification of Nuts	2-3i
Internal Wrenching Nuts	2-3h
Jamnuts	2-3d
Light Hexagon Nuts	2-3e, F2-25
Self-Locking Nuts	2-3a
Sheet Spring Nuts	2-3g, F2-27
Wingnuts	2-3f, F2-26
O	
Oil Caps, Drain Cocks, and Valves, Lockwiring of	F2-79
Oil Cell Identification	3-4c
Oil Cell Storage	3-4d
Old and New Color Code (for Aluminum Alloys), Cross Reference	T4-5

INDEX - CONT

VOLUME 6

Subject — **Paragraph Figure, Table Number**

O - Continued

Other Adhesives. ..... 6-2 n
Oversize Insert and Twinsert Kits 2-11k

P

Packings, Gaskets and 3-6
Part Number Breakdown, Spacer F2-68
Part Numbers, Helical Insert T2-13
Phenolic and Plastic Materials, General 5-1
Phenolic Compositions 5-2
- Identification 5-2a
- Storage 5-2c
- Usage 5-2b

Pin, Threaded Taper F2-48
Pins 2-7
- Clevis Pins 2-7a, F2-46
- Cotter Pins 2-7g, F2-52
- Hinge Pins 2-7f
- Lockpins 2-7e, F2-51
- Safety Retaining Pins 2-7c, F2-49
- Spring Pins 2-7d, F2-50
- Taper Pins 2-7b

Pins, Plain Taper F2-47
Plain Washers 2-4a, F2-29
Plastic Materials 5-3
- Identification 5-3a, T5-1
- Storage 5-3c
- Types 5-3b

Plate Nut, Self-Locking F2-16
Practices for Installation of Cotter Pins and Lockwire 2-17
- Cotter Pin Installation 2-17a, F2-77
- Double-Twist Method 2-17c
- Lockwire Installation 2-17b
- Lockwiring Turnbuckles 2-17f
- Rod End Safetying (Key Type NAS 559) 2-17h, F2-82
- Safetying Emergency Devices 2-17e
- Securing Electrical and Electronic Connectors 2-171
- Single-Wire Method 2-17d
- Speed Rig Safetying 2-17g

Precautionary Measures (for Adhesives, Sealants, and Cements) 6-1a
Preload Indicating Washers F2-35
Preparation of Surface (for Adhesives, Sealants, and Cements) 6-1b
Principle of Lockring F2-75
Purpose (of Manual) 1-1

INDEX - CONT

VOLUME 6

Subject	Paragraph Figure, Table Number
R	
Recommended Changes to Department of the Army Publications	1-6
Recommended Torque Values	2-18c
Recommended Torque Values, Nut	T2-9
Removal of Bent, Damaged, or Broken Studs	2-10a
Removal of Helical Insert	2-11f
Removal of Twinsert	2-11j
Removal, Stud	F2-64
Repair of Damaged Spark Plug Threads	2-11g
Responsibilities	
of AVSCOM	1-5
of Maintenance Activities	1-4
Rivet, Cherry MAX	F2-55
Rivet, Huck	F2-57
Rivets	2-8, F2-53
Blind Rivets	2-8i
Common Solid Shank Rivets	2-8a
Corrosion Resistance	2-8d
General Usage	2-8c
Heat Treatment	2-8f
Hi-Shear Rivets	2-8h, F2-54
Materials Used in Fabrication	2-8b
Rivnuts	2-8j
Strength	2-8e
Rivets, Cherrylock	F2-56
Rivnut Types	F2-58
Rivnuts	2-8j
Rod End Safetying (Key Type NAS 559)	2-17h, F2-82
Rubber Materials	
General	3-1
Identification	T3-3
Inspection	3-1b
Storage	3-1a
S	
SAE Numbers Used in Identification of Steels	T4-8
Safety Retaining Pins	2-7c, F2-49
Safetying Emergency Devices	2-17e
Scope (of Manual)	1-2
Screw Heads	2-5a
Screws	2-5
Electrical Screws	2-5f
Length Measurement	2-5b

INDEX – CONT

VOLUME 6

Subject	Paragraph, Figure, Table Number
S – Continued	
Machines Screws	2-5d,F2-38
Screw Heads	2-5e,F2-40
Self-Tapping Screws	2-5e,F2-36
Structural Screws	4-3l
Screws, Fillister Head	F2-39
Screws, Flat-Head	F2-37
Screws, Nuts, and Bolts, Lockwiring of	F2-78
Screws, Round-Head Machine	F2-41
Sealants	6-3
Anaerobic Adhesive MIL-R-46082	6-31
Characteristics of Catalyst Cured Sealants	6-3c
Characteristics of Drying Sealants	6-3b
Characteristics of Pliable Sealants	6-3a
Sealing Compound, MIL-S-7126	6-3f
Sealing Compound, MIL-S-8784	6-3d
Sealing Compound, PR-1826 B1/2	6-3e
Semi-Solid Synthetic Rubber Sealant for Engine Firewalls	6-3l
Semi-Solid Synthetic Rubber Sealant, MIL-A-7126, for Hot-Air Ducts	6-3g
Sealing Compound, MIL-S-7126	6-3f
Sealing Compound, MIL-S-8784	6-3d
Sealing Compound, PR-1826 B1/2	6-3e
Application Time (Room Temperature)	T6-4
Cure Time (Room Temperature)	T6-5
Securing Electrical and Electronic Connectors	2-17i
Selection of Helical Inserts	2-11b
Self-Locking Bolts	2-21, F2-9
Self-Locking Engine Nut	F2-20
Self-Locking Nut Installation Limits	F2-21
Self-Locking Nuts	2-3a
Self-Locking Plain Nut	F2-15
Self-Locking Plate Nut	F2-16
Self-Locking Thin Nut	F2-14
Self-Tapping Screws	2-5e,F2-40
Semi-Solid Rubber Sealant, for Engine Firewalls	6-3h
Semi-Solid Rubber Sealant, Mil-A-7126, for Hot-Air Ducts	6-3g
Shear Castle Nut	F2-23
Sheet Spring Nuts	2-3g, F2-27
Shelf Life (of Adhesive, Acrylic Monomer and Polymer Base Adhesive, MIL-A-8576, Type II, Non-Solvent)	T6-3
Shelf Life (of Adhesive, Acrylic Monomer and Polymer Base Adhesive, MIL-A-8576, Type I, Solvent Type)	T6-1
Shock Absorber and Elastic Exerciser Cords	3-5
Cord Identification	3-5a
Cord Inspection	3-5b

INDEX - CONT

VOLUME 6

Subject — **Paragraph Figure, Table Number**

S - Continued

Cord Storage 3-5d
Cord Testing 3-5c
Single-Wire Method 2-17d
Snap and Curtain Fasteners 2-9d
Spacer Identification 2-12a
Spacer Installation 2-12b
Spacer Installation Data F2-69
Spacer Part Number Breakdown F2-68
Special Fitting Types 2-16b
Special Washers 2-4c
Specific Gravity Ranges (for Adhesives and Cements) T6-2
Speed Rig Lockwiring F2-81
Speed Rig Safetying 2-17g
Split Lockwasher F2-30
Spring Pins 2-7d, F2-50
Steel Alloys 4-4
Identification 4-4a
Marking 4-4b
Steel, Identification of T4-10
Storage
of Aluminum Alloys 4-2c
of Gaskets and Packing 3-6c
of Magnesium Alloys 4-3c
of Phenolic Compositions 5-2c
of Plastic Materials 5-3c
of Rubber Materials 3-1a
Strength (of Rivets) 2-8e
Structural Screws 2-5c, F2-36
Stud and Grommet Installation F2-59
Stud Installation F2-65
Stud Removal F2-64
Stud Types F2-63
Studs 2-10
Installating New Stud 2-10b
Removal of Bent, Damaged, or Broken Studs 2-10a
Styles of Plate Nuts F2-18
Substitution and Interchangeability of Material (Air Items), Authority for 1-3
Substitution and Interchangeability (of Rivets) 2-8g
Substitutions for Huck, Hi-Lok, and NAS Bolts 2-2r
Substitutions for Jo-Bolts, and V-Bolts 2-2s, T2-7

INDEX - CONT

VOLUME 6

Subject — **Paragraph Figure, Table Number**

T

Taper Pin Washer F2-32
Taper Pins 2-7b
Tee-Head Bolts 2-2m
Teeth-Type Lockwashers F2-31
Temper Designations (of Aluminum Alloys) T3-3
Terminals, Turnbuckle F2-72
Test Loads (of Cords)..... T3-2
Testing of Magnesium Alloys 4-3b
Thin Nut, Self-Locking F2-14
Threaded Taper Pins F2-48
Tie Rod Terminal Fittings 2-13b, F2-71
Tie Rods 2-13
  Identification 2-13a
  Tie Rod Terminal Fitting 2-13b, F2-71
Tire Identification 3-2a
Tire Storage 3-2b
Tires 3-2
  Tire Identification 3-2a
  Tire Storage 3-2b
Titanium and Titanium Alloys 4-5, T4-11
  Forming 4-5a
  Identification 4-5c
  Inspection 4-5b
  Marking 4-5d
Tools Data, Helical Insert and T2-15
Tools Data, Metri-Thread Insert and T2-16
Tools Data, Twinsert and T2-17
Torque 2-18
  Considerations to be Taken Before Torquing 2-18b
  Recommended Torque Values 2-18c
  Torque Definitions 2-18a
Torque Definitions 2-18a
Torque for Used All-Metallic and Nonmetallic Self-Locking Nuts,
  Minimum Breakaway T2-8
Torque Values, Nut, Recommended T2-9
Tube Clamps..... F2-44
Tube Identification 3-3a
Tube Storage 3-3b
Tubes 3-3
  Tube Identification 3-3a
  Tube Storage 3-3b
Turnbuckle Assemblies, Typical F2-80
Turnbuckle Inspection 2-14b
Turnbuckle Installation 2-14a

INDEX - CONT

VOLUME 6

Subject — **Paragraph Figure, Table Number**

T - Continued

Turnbuckle Terminals F2-72
Turnbuckles 2-14
Turnbuckle Inspection 2-14b
Turnbuckle Installation 2-14a
Twinsert and Tools Data T2-16
Twinsert Installation F2-66
Types of Aluminum Alloys T4-6
Types of Helical Inserts 2-11a
Types of Plastic Materials 5-3b
Types of Rivnuts F2-58
Typical Fittings F2-76
Typical Turnbuckle Assemblies F2-80

U

Usage (of Phenolic Compositions) 5-2b

W

Washer, Countersunk F2-34
Washer, High Tensile F2-33
Washer, Taper Pin F2-32
Washers 2-4
Lockwashers 2-4b
Plainwashers 2-4a, F2-29
Special Washers 2-4c
Washers, Preload Indicating F2-35
Wingnuts 2-3f, F2-26

INDEX - CONT

VOLUME 7

Subject	Paragraph Figure, Table Number
A	
Advantages (of Radiography)	5-3
Advantages (of Ultrasonic Inspection)	6-2
Amperage (Circular Magnetization)	4-9b
Amperage (Longitudinal Magnetization)	4-10b
Angle Beam Method	6-9b
Application, Field.	7-4
Application of Cleaner	3-14b
Application of Developer	3-14e
Applications (of Longitudinal Magnetization)	4-10c
Applications (of Radiography)	5-5
Applying Transparent Tape	4-12b
Availability of Penetrants	3-8b
B	
Basic Principles of Penetrant Inspection	3-3
Basic Terminology (of Magnetism)	4-3
Ferromagnetic Metals	4-3a
Leakage Field	4-3b
Magnetic Substances	4-3d
Magnetic Flux	4-3e
Magnetism	4-3c
Permeability	4-3f
Residual Magnetism	4-3g
Retentivity	4-3h
Basic Testing Methods (Ultrasonics)	6-4
Beam Divergence	6-7c
Best Access to Object	5-6f
Black Light	3-11d
C	
Calibration of Ultrasonic Equipment	6-10
Capabilities and Limitations (Magnetic Particle Inspection)	4-5
Changing Magnitude of Current	7-5c
Characteristics, Transmission	6-7
Circular Magnetization	4-9
Amperage	4-9b
Technique	4-9a
Compatibility	3-8a
Conditions Not Requiring Demagnetization	4-13b
Consumable Materials	1-3
Continuous Method	4-8b

INDEX - CONT

VOLUME 7

Subject — **Paragraph Figure, Table Number**

C - Continued

Couplants 6-8d
Current and Particle Application 4-8
Continuous Method 4-8b
  Field Direction 4-8c
  Field Measurement 4-8d
  Residual Method 4-8a
  Sensitivity Level 4-8e
Currents, Eddy 7-3

D

Data, Use of 2-6
Defects, Honeycomb, Fiberglass, and Composite T2-2
Definitions (Magnetic Particle Inspection Terms) 4-11a
Degree of Sensitivity 5-6d
Demagnetization 4-13
  Conditions Not Requiring Demagnetization 4-13b
  Limits of Demagnetization 4-13d
  Reasons for Demagnetization 4-13a
  Techniques for Demagnetization 4-13a
Destructive Tests 2-4a
Detection Standards (Radiation) T5-1
Detection, Flaw 2-7, T2-1
Developer Application 3-10j
Developer Draining 3-10k
Developer Dwell Time 3-101
Disadvantages (of Radiography) 5-4
Disadvantages (of Ultrasonic Inspection) 6-3
Draining 3-10e
Dry Particle Indications 4-12c
Drying 3-10c

E

Eddy Current Inspection, Uses of T7-1
Eddy Current Test Set Model ED-520 7-5
  Changing Magnitude of Current 7-5c
  Needle Defections 7-5d
  Operation 7-5a
  Testing Procedure 7-5b
Eddy Currents 7-3
Electrical Precautions 5-11d
Electromagnetic Inspections, General 7-1

INDEX - CONT

VOLUME 7

Subject — **Paragraph Figure, Table Number**

E - Continued

Emulsifier Application 3-10g
Emulsifier Draining 3-10h
Emulsifier Dwell Time 3-101
Equipment (Longitudinal Magnetization) 4-10d
Evaluate Discontlnuity 3-14g
Exposure 5-8a
Exposure and Processing, Film 5-8
Exposure Limits ..... 5-11 b

F

Ferromagnetic Metals 4-3a
Field Application 7-4
Field Direction 4-8c
Field Measurement 4-8d
Filing Radiographs 5-10
Film Exposure and Processing 5-8
  Exposure 5-8a
  Processing 5-8b
Film Placement 5-6b
Film Processing, Manual F5-1
Fixing Indications with Lacquer 4-12a
Flaw Detection 2-7, T21
Fluorescent Indications 4-12e
Fluorescent Penetrant Inspection, Specific Procedures for 3-11
Fluorescent Penetrant Processes 3-13
Fluoroscopy 5-7a
Fundamentals of Magnetic Particle Inspection 4-4

G

General (Inspection Techniques) 5-6a
General Penetrant Inspections 3-1
General Procedures for Penetrant Inspection 3-6
General Shop Rules 2-2
  Maintenance of Shop Equipment 2-2e
  Responsibility 2-2a
  Shop Housekeeping 2-2b
  Shop Safety 2-2c
  Shop Tools and Materials 2-2d
General, Electromagnetic Inspections 7-1
General, Magnetic Particle Inspections 4-1
General, Nondestructive Inspection 2-1

INDEX - CONT

VOLUME 7

Subject	Paragraph Figure, Table Number
G - Continued	
General, Radiography	5-1
General (Radiography Safety and Equipment)	5-11a
General (Ultrasonic Inspection Equipment)	6-8a
General, Ultrasonic Inspections	6-1
H	
Honeycomb, Fiberglass, and Composite Defects	T2-2
I	
Importance of Skilled Operators	3-5
Indicators, Magnetic Particle	4-11
Inspection (Penetrant)	3-12a
Inspection and Interpretation	3-12
Inspection	3-12a
Interpretation	3-12b
Inspection Conditions	3-11a
Inspection of Bar Stock	6-9f
Inspection of Metal Plates and Sheets	6-9e
Inspection of the Part	3-14f
Inspection of Tubes and Pipes	6-9g
Inspection Preparation	4-6
Inspection Process, Selection of	3-9
Inspection Techniques	5-6
Best Access to Object	5-6f
Degree of Sensitivity	5-6d
Film Placement	5-6b
General	5-6a
Source-to-Film Distance	5-6c
Thickness Measurement	5-6e
Inspection, Penetrant, Types and Methods	T3-2
Inspection, Ultrasonic, Equipment	6-8
Inspection, Ultrasonic, Techniques	6-9
Inspections, Types of	2-4
Interpretation and Inspection	3-12
Interpretation (Penetrant Inspection)	3-12b
Interpretation (Radiographic)	5-9, 5-9a

INDEX - CONT

VOLUME 7

Subject — **Paragraph Figure, Table Number**

L

Lamb Waves 6-6d
Leakage Field 4-3b
Lighting and Facilities 3-11c
Limitations (Penetrant Inspection) 3-4
Limitations and Capabilities (Magnetic Particle Inspection) 4-5
Limits of Demagnetization 4-13d
Longitudinal Magnetization 4-10
- Amperage 4-10b
- Applications 4-10c
- Equipment 4-10d
- Technique 4-10a

Longitudinal Waves 6-6a

M

Magnetic Flux 4-3e
Magnetic Particle Indicators 4-11
- Definitions 4-11a
- Steps of Inspection 4-11b

Magnetic Particle Inspection, Fundamentals of 4-4
Magnetic Particle Inspections, General 4-1
Magnetic Substances 4-3d
Magnetism 4-3c
Magnetism, Theory of 4-2
Magnetization, Circular 4-9
Magnetization, Longitudinal 4-10
Maintenance of Shop Equipment 2-2e
Manual Film Processing F5-1
Materials, Consumable 1-3
Methods of Application (Magnetic Particles) 4-7b
Methods of Application, Particles and 4-7
Methods of Recording Indications (Magnetic Particle Inspection) 4-12
- Applying Transparent Tape 4-12b
- Dry Particle Indications 4-12c
- Fixing Indications with Lacquer 4-12a
- Fluorescent Indications 4-12e
- Photographing Indications 4-12f
- Wet Particle Indications 4-12d

Minimum Penetration Time For Penetrants T3-1
Misinterpretation (Radiographic) 5-9b
Modes of Vibration 6-6
- Lamb Waves 6-6d

INDEX - CONT

VOLUME 7

Subject — **Paragraph Figure, Table Number**

M - Continued

Longitudinal Waves 6-6a
Rayleigh Waves 6-6c
Transverse Waves 6-6b

N

Nature of Sound Waves 6-5
NDI Shop Requirements 2-3
Need for Both Types of Tests 2-4c
Needle Deflections 7-5d
Nondestructive Inspection, General 2-1
Nondestructive Tests 2-4b

O

Operation (Eddy Current Test Set) 7-5a
Operative Precautions 3-7b

P

Particle Application, Current and 4-8
Particles 4-7a
Particles and Methods of Application 4-7
- Methods of Application 4-7b
- Particles 4-7a

Penetrant Application 3-10d
Penetrant Application (Type I, Method C) 3-14c
Penetrant Inspection, Basic Principles of 3-3
Penetrant Inspection, General Procedures for 3-6
Penetrant Inspection, Type I, Method C 3-14
Penetrant Inspection Types and Methods T3-2
Penetrant Inspections, General 3-1
Penetrant Inspections, Precautions in 3-7
Penetrants, Minimum Penetration Time for T3-1
Penetrants, Quality Control of 3-8
Penetration Times 3-10f
Permeability 4-3f
Personnel Requirements 2-5
Photographing Indications 4-12f
Portable X-Ray Units 5-7b
Pre-operative Precautions 3-7a
Precautions in Penetrant Inspections 3-7

INDEX - CONT

VOLUME 7

Subject — **Paragraph Figure, Table Number**

P - Continued

Operative Precautions 3-7b
Pre-operative Precautions 3-7a
Safety Precautions 3-7d
Temperature Limitations 3-7c
Precleaning 3-10b
Precleaning Process (for Type C Penetrant) 3-14a
Preparation, Inspection 4-6
Pretesting 3-10a
Pretesting, Precleaning, Drying, Application, and Removal 3-10
Developer Application 3-10j
Developer Draining 3-10k
Developer Dwell Time 3-101
Draining 3-10e
Drying 3-10c
Emulsifier Application 3-109g
Emulsifier Draining 3-10h
Emulsifier Dwell Time 3-10i
Penetrant Application 3-10d
Penetration Times 3-10f
Precleaning 3-10b
Pretesting 3-10a
Removal Methods 3-10m
Processing 5-8b
Purpose (of Electromagnetic Inspections) 7-2
Purpose (of Manual) 1-1
Purpose (of Penetrant Inspections) 3-2
Purpose (of Radiography) 5-2

Q

Quality Control of Penetrants 3-8
Availability 3-8b
Compatibility 3-8a

INDEX - CONT

VOLUME 7

Subject	Paragraph Figure, Table Number
R	
Radiation Detection Standards	T5-1
Radiation Detectors	5-11c
Radiographic Interpretation	5-9
Interpretation	5-9a
Misinterpretation	5-9b
Radiographs, Filing	5-10
Radiography, General	5-1
Radiography Safety Precautions and Equipment	5-11
Electrical Precautions	5-11d
Exposure Limits	5-11b
General	5-11a
Radiation Detectors	5-11c
Rayleigh Waves	6-6c
Reasons for Demagnetization	4-13a
Recording Indications, Methods of (Magnetic Particle Inspection)	4-12
Reflection	6-7a
Refraction and Mode Conversion	6-7b
Relative Response of Survey Meters	T5-2
Removal of Developer	3-14h
Removal of Excess Penetrant	3-14d
Removal Methods (Penetrants)	3-10m
Requirements, Personnel	2-5
Residual Magnetism	4-3g
Residual Method	4-8a
Responsibility (for Shop Rules)	2-2a
Retentivity	4-3h
S	
Safety Precautions	3-7d
Safety Precautions and Equipment	5-10
Scope (of Manual)	1-2
Search Units	6-8b
Selection of Inspection Process	3-9
Sensitivity Level	4-8e
Shop Housekeeping	2-2b
Shop Requirements, NDI	2-3
Shop Rules, General	2-2
Shop Safety	2-2c
Shop Tools and Materials	2-2d
Skilled Operators, Importance of	3-5
Sound Waves, Nature of	6-5
Source-to-Film Distance	5-6c
Special Techniques (Radiography)	5-7

INDEX - CONT

VOLUME 7

Subject — **Paragraph Figure, Table Number**

S - Continued

Fluoroscopy 5-7a
Portable X-Ray Units 5-7b
Specific Procedures for Fluorescent Penetrant Inspection 3-11
Black Light 3-11d
Inspection Conditions 3-11a
Lighting and Facilities 3-11c
Surface Preparation 3-11b
Steps of Inspection (Magnetic Particle Inspection) 4-11b
Straight Beam Method 6-9a
Surface Preparation 3-11b, 6-9d
Surface Wave Method 6-9c
Survey Meters, Relative Response of T5-2

T

Technique (of Circular Magnetization) 4-9a
Technique (of Longitudinal Magnetization) 4-10a
Techniques for Demagnetization 4-13c
Techniques, Inspection 5-6
Techniques, Special (Radiography) 5-7
Temperature Limitations 3-7c
Terminology, Basic (of Magnetism) 4-3
Test Set, Eddy Current, Model ED-520 7-5
Testing Methods, Basic (Ultrasonics) 6-4
Testing Procedure (Eddy Current) 7-5b
Theory of Magnetism 4-2
Thickness Measurement 5-7e
Transducers 6-8c
Transmission Characteristics 6-7
Beam Divergence 6-7c
Reflection 6-7a
Refraction and Mode Conversion 6-7b
Transverse Waves 6-6b
Type I, Method C Penetrant Inspection 3-14
Application of Cleaner 3-14b
Application of Developer 3-14e
Evaluate Discontinuity 3-14g
Inspection of the Part 3-14f
Penetrant Application 3-14c
Precleaning Process 3-14a
Removal of Developer 3-14h
Removal of Excess Penetration 3-14d

INDEX - CONT

VOLUME 7

Subject — **Paragraph Figure, Table Number**

T - Continued

Types of Fluorescent Penetrant Processes 3-13
Types of Inspections 2-4
Destructive Tests 2-4a
Need for Both Types of Tests 2-4c
Nondestructive Tests 2-4b

U

Ultrasonic Equipment, Calibration of 6-10
Ultrasonic Inspection Equipment 6-8
General 6-8a
Search Units 6-8b
Transducers 6-8c
Ultrasonic Inspection Techniques 6-9
Angle Beam Method 6-9b
Inspection of Bar Stock 6-9f
Inspection of Metal Plates and Sheets 6-9e
Inspection of Tubes and Pipes 6-9g
Straight Beam Method 6-9a
Surface Preparation 6-9d
Surface Wave Method 6-9c
Ultrasonic Inspections, General 6-1
Use of Data 2-6
Uses of Eddy Current Inspection T7-1

V

Vibration, Modes of 6-6

W

Wet Particle Indications 4-12d

INDEX - CONT

VOLUME 8

Subject	Paragraph Figure, Table Number
A	
Aluminum Alloys, Typical Machine Setting for Spot Welding	T3-4
Aluminum Arc Welding	3-5d
Aluminum Gas Welding	3-5c
Aluminum Spot Welding	3-5e
Aluminum Welding.	3-5
Arc Welding	3-5d
Cleaning	3-5b
Gas Welding	3-5c
Spot Welding	3-5e
Types of Alloys	3-5a
Arc Welding Defects, Causes, and Remedies	T3-3
Arc Welding Magnesium	T3-6
B	
Bandsaws	
Care and Use	2-4b
Cutoff-Type	F2-3
Vertical-Contour Type	F2-2
Bearing Roll Staking	2-6e
Brazing	3-9a
Brazing and Silver Soldering	3-9
Brazing	3-9a
Post Brazing and Silver Soldering Cleaning	3-9c
Silver Soldering	3-9b
Brush Method of Starting Electric Arc	F3-5
C	
Care and Use of Equipment.	2-4
Bandsaws	2-4b
Drilling Machines	2-4a
Grinders	2-4f
Lathes	2-4c
Milling Machines	2-4d
Shapers	2-4e
Cleaning	
Aluminum Welding	3-5b
Magnesium Welding	3-6a
Consumable Materials	1-3
Corrosion-Resistant Steel and Nickel Chromium Alloy Welding	3-7

INDEX - CONT

VOLUME 8

Subject — **Paragraph Figure, Table Number**

C - Continued

Arc Welding 3-7d
Distinguishing Corrosion-Resistant Steels and Nickel-Base Alloys 3-7a
Gas Welding 3-7c
Special Welding Considerations 3-7b
Spot Welding 3-7e
Welding Stresses and Distortion 3-7f
Corrosion-Resistant Steel Arc Welding 3-7d
Corrosion-Resistant Steel Gas Welding 3-7c
Corrosion-Resistant Steel Spot Welding 3-7e
Corrosion-Resistant Steels and Nickel Alloys,
Relation Between Sheet Thickness and Current Required
for Metallic Arc Welding of T3-8
Corrosion-Resistant Steels and Nickel-Base Alloys,
Relation Between Sheet Thickness and Current Required
for Inert-Arc Welding of T3-9
Counterboring and Spotfacing 2-6c
Cut-off Type Bandsaw F2-3

D

Distinguishing Corrosion-Resistant Steels and Nickel-Base Alloys 3-7a
Drill Press F2-1
Drilling Machines
Care and Use 2-4a
Safety Precautions 2-3a
Special Operations on 2-6

E

Electric Arc Welding Equipment 3-3b
Electric Arc Welding Equipment F3-2
Electrodes ..... 3-4a ,T3-1
Equipment Safety 2-2c

F

Fire Safety 2-2d
Flames, Gas Welding F3-4
Fluxes 3-4c

INDEX - CONT

VOLUME 8

Subject	Paragraph Figure, Table Number
G	
Gas Welding	3-3a
Gas Welding Equipment	F3-1
Gas Welding Equipment, Guide to Regulation of	T3-5
Gas Welding Flames	F3-4
General	
Machine Shop Practices	2-1
Weld Shop Practices	3-1
General Layout Practices	2-5a
Grinder	F2-7
Grinder Wheel Installation	F2-8
Grinding Machines	
Care and Use	2-4f
Safety Precautions	2-3b
Wheel Installation	F2-8
Guide to Regulation of Gas Welding Equipment	T3-5
I	
Inert-Arc Welding of Corrosion-Resistant Steels and Nickel-Base Alloys, Relation Between Sheet Thickness and Current Required for	T3-9
Introduction	
Consumable Materials	1-3
Purpose	1-1
Scope	1-2
L	
Lapping	2-6d
Lathes	F2-4
Care and Use	2-4c
Safety Precautions	2-3c
Laying Out and Mounting Work	2-5
General Layout Practices	2-5a
Mounting	2-5b
M	
Machine Safety Precautions	2-3
Drilling Machines	2-3a
Grinding Machines	2-3b
Lathes	2-3c
Milling Machines	2-3d

INDEX - CONT

VOLUME 8

Subject — **Paragraph Figure, Table Number**

M - Continued

Miscellaneous Machine Tools 2-3f
Portable Machine Tools 2-39
Shapers and Planers 2-3e
Machine Settings for Arc Welding Magnesium T3-6
Machine Shop Practices
Care and Use of Equipment 2-4
General 2-1
Laying Out and Mounting Work 2-5
Machine Safety Precautions 2-3
Shop Rules 2-2
Special Operations on Drilling Machines 2-6
Magnesium Arc Welding 3-6c
Magnesium Gas Welding 3-6b
Magnesium Spot Welding 3-6d
Magnesium Welding 3-6
Arc Welding 3-6c
Cleaning 3-6a
Gas Welding 3-6b
Spot Welding 3-6d
Metallic Arc Welding of Corrosion-Resistant Steels and Nickel Alloys,
Relation Between Sheet Thickness and Current Required for T3-8
Milling Machines
Care and Use 2-4d
Safety Precautions 2-3d
Miscellaneous Machine Tools, Safety Precautions 2-3f
Mounting Work 2-5b

P

Portable Machine Tools, Safety Precautions 2-3g
Post Brazing and Silver Soldering Cleaning 3-9c
Purpose of Manual 1-1

R

Reaming 2-6a
Relation Between Sheet Thickness and Current Required for
Inert-Arc Welding of Corrosion-Resistant Steels and
Nickel-Base Alloys T3-9
Relation Between Sheet Thickness and Current Required for
Metallic Arc Welding of Corrosion-Resistant Steels and
Nickel Alloys T3-8

INDEX - CONT

VOLUME 8

Subject — **Paragraph Figure, Table Number**

R - Continued

Responsibility
- Machine Shop Rules, for ... 2-2a
- Welding Shop Rules, for ... 3-2a

Rod Information, Welding ... T3-2

S

Safety, Welding Shop ... 3-2c
Schematic, Welding Equipment ... F3-3
Scope of Manual ... 1-2
Shaper ... F2-6
Shapers and Planers, Safety Precautions ... 2-3e
Shapers, Care and Use ... 2-4e
Shop Housekeeping
- Machine Shop ... 2-2b
- Welding Shop ... 3-2b

Shop Rules, Machine Shop ... 2-2
- Equipment Safety ... 2-2c
- Fire Safety ... 2-2d
- Responsibility ... 2-2a
- Shop Housekeeping ... 2-2b

Shop Rules, Welding Shop ... 3-2
- Responsibility ... 3-2a
- Safety ... 3-2c
- Shop Housekeeping ... 3-2b

Silver Soldering ... 3-9b
Special Operations on Drilling Machines ... 2-6
- Bear Roll Staking ... 2-6e
- Counterboring and Spotfacing ... 2-6c
- Lapping ... 2-6d
- Reaming ... 2-6b
- Tapping ... 2-6a

Special Welding Considerations, Corrosion-Resistant Steel and Nickel
- Chromium Alloy Welding ... 3-7b

Starting Electric Arc, Brush Method ... F3-5
Stress Relieving Treatment ... T3-7

T

Tapping ... 2-6a
Treatment, Stress Relieving ... T3-7
Types of Alloys, Aluminum ... 3-5a

INDEX - CONT

VOLUME 8

Subject — **Paragraph Figure, Table Number**

T - Continued

Types of Welding 3-3
Electric Arc Welding 3-3b
Gas Welding 3-3a
Spot Welding 3-3c
Typical Machine Setting for Spot Welding Aluminum Alloys T3-4

V

Vertical-Contour Bandsaw F2-2

W

Welding Equipment
Electric Arc F3-2
Gas F3-1
Schematic F3-3
Welding, Arc; Defects, Causes, and Remedies T3-3
Welding Materials 3-4
Electrodes 3-4a
Fluxes 3-4c
Welding Rods 3-4b
Welding on Aircraft 3-8
Welding Rod Information T3-2
Welding Rods 3-4b
Welding Shop Practices
Aluminum Welding 3-5
Brazing and Silver Soldering 3-9
Corrosion-Resistant Steel and Nickel Chromium Alloy Welding 3-7
General 3-1
Magnesium Welding 3-6
Shop Rules 3-2
Types of Welding 3-3
Welding Materials 3-4
Welding on Aircraft 3-8
Welding Stresses and Distortion, Corrosion-Resistant Steels and Nickel
Chromium Alloy Welding 3-7f

INDEX - CONT

VOLUME 9

Subject — **Paragraph Figure, Table Number**

A

Accuracy Limits, Torque Tool T8-1
Action of Preload Indicating Washers F8-30
Adjustable Hook Spanner Wrench F4-39
Adjustable Reamer F4-92
Adjustable Wrench F4-25
Adjusting the Snap Gauge F3-65
Adjustment of Spray Pattern F5-4
Air Blow Cleaning Gun F5-13
Air Compressors, Typical F9-14
Aircraft Landing Gear Jack F9-10
Aircraft Pre-Heater F9-15
Alternate Method for Tightening to 15 Degree Wrench Arc F8-25
Angle Extension Torque Wrench Attachment F8-20
Angle, Checking F3-19
Application of Blade Pitch for Certain Materials F4-98
Application of Force, Improper F8-19
Applying Paint at an Angle, Effect of F5-6
Army Aviation, Types of Tools Used in 2-2
Attachment - Offset Reverse Extension, Torque Wrench F8-17
Audible-Indicating Torque Wrench F8-4
Automatic Center Punch F4-60
Awl 4-6, F4-48
Awl, Scribing with an F4-49

B

Ball Peen Hammer F4-1
Beading Large Tubing F4-124
Bench Vise 4-8a, F4-53
Bench Vise, Using a 4-54
Bender, Tube F4-117
Bending Tube Tool 4-123
Bending Tube F4-118
Bevel Protractor F3-12
Bits, Drill 4-13
Blade Set, Hacksaw F4-97
Bobs, Plumb 3-3, F3-6
Body Hammer F4-2
Box-End Wrench Offset F4-23
Box-End Wrenches F4-22
Boxes, Tool 2-9
Boxes, Typical Tool F2-1
Breast Drill F4-80
Brown and Sharpe Tapered Reamer F4-94

INDEX - CONT

VOLUME 9

Subject — **Paragraph Figure, Table Number**

C

Cable Rigging Tension Chart, Typical F7-7
Cable Tensionmeter 7-3
Calibration, Repair and 8-8
Calipers 3-8
    Slide F3-28
    Vernier F3-29
Calipers, Hermaphrodite F3-27
Calipers, Simple F3-24
Calipers, Spring-Joint F3-25
Calipers, Transfer F3-26
Care of Torque Tools 8-6
Carpenters Square F3-10
Carriage Clamp F4-55
Carriage Clamp, Using F4-56
Center Head, Setting the F3-14
Center Punch F4-50
Center Punch for Drilling F4-84
Check and Chuck Key, Three-Jaw F6-3
Checkered Flags, Reflectorizing and 9-4
Checking Angle F3-19
Checking Diameters, Snap Gauge for F3-64
Checking Dimension Between Surfaces, Snap Gauge for F3-62
Checking Flat or Cylindrical Work, Snap Gauge for F3-63
Checking Propeller Shaft Run Out F3-76
Chisels F4-57
Chisels, Cold 4-9
Clamp, Carriage F4-55
Clamping Devices 4-8
    Bench Vise F4-53
Cleaner, File F4-79
Cleaning Gun, Air Blow F5-13
Cleaning Guns 5-5
Cleaning Solvent Gun F5-12
Cold Chisels 4-9
Combination Flaring Tools F4-120
Combination Square F3-11
Combination Wrench F4-24
Common Screwdriver F4-13
Concentric Torque Wrench Attachments F8-15
Consumable Materials 1-3
Control Surface Angle, Measuring at Full Throw F7-3
Conversion of Tensiometer Reading in Pounds F7-6
Correct and Incorrect Stroke Technique F5-5

INDEX - CONT

VOLUME 9

Subject — **Paragraph Figure, Table Number**

C - Continued

Correct Drill Sizes for Tapping F4-102
Correct GO Dimension for Cylindrical Part F3-68
Correct NO-GO Dimension for Cylindrical Part F3-69
Cotter Pin Extractor 7-7, F7-11
Cranes and Hoists, Typical F9-18
Crossfiling F4-76
Crowfoot Wrench F7-20
Crowfoot Wrench, Using a F7-21
Crowfoot Wrenches 7-15
Curved Tooth File F4-74
Cutters, Pipe F4-114
Cutters, Tube F4-115
Cutting Edge and Heel Angles, Usual F4-86
Cutting Edge, Hand Grinding of F4-87
Cutting Edge, Hand Grinding of Heel to F4-88
Cutting, Flush F4-113
Cutting Tube with Tube Cutter 4-23
Cutting Wire F4-112
Cylinder, Locating Diameter of F3-15
Cylinder, Marking Diameter of F3-16
Cylindrical Part, Correct GO Dimension for F3-68
Cylindrical Part, Correct NO-GO Dimension for F3-69
Cylindrical Part, Placing Snap Gauge on F3-67

D

Deflecting Beam Torque Wrench F8-2
Deicer Boot Pliers 7-12
Deicer Boot Pliers, Using F7-19
Deicer Boot Roller 7-14
Depth Gauge, Micromete F3-48
Depth Gauge, Rule F3-47
Depth Gauge, Vernier F3-49
Depth Gauges 3-11
Depth Micrometer F3-36
Description
Leather Punch 7-13
Determining Correct Torque Value 8-4
Determining Depth with the Square Head F3-20

INDEX - CONT

VOLUME 9

Subject — **Paragraph Figure, Table Number**

D - Continued

Diagonal Cutting Pliers ... F4-42
Dial Indicator Installed on Propeller Shaft ... F3-75
Dial Indicators ... 3-20
Dies ... F4-104
Dies, Taps and ... 4-18
Diestock ... F4-105
Divider, Spring ... F3-21
Divider, Wing ... F3-22
Dividers ... 3-7
Dividers, Scribing a Circle with ... F3-23
Double Cutting Shears ... 4-21
Double-Flaring Tool ... F4-122
Drawfiling ... F4-78
Dressing a Grinding Wheel ... F6-6
Drill Bit, Machine Grinding a ... F4-85
Drill Bit, Typical ... F4-83
Drill Bits ... 4-13
Drill Grinding Gauge, Using ... F4-89
Drill Jaws, V-Grooves in ... F4-82
Drill Sizes ... T4-2
Drill, Breast ... F4-80
Drill, Hand ... F4-81
Drill, Pneumatic ... 5-7
Drilling, Center Punch for ... F4-84
Drills, Electric ... 6-3
Drills, Hand ... 4-12
Drills, Pneumatic ... F5-15
Drive Punch ... F4-61

INDEX - CONT

VOLUME 9

Subject	Paragraph Figure, Table Number
E	
Effect of Applying Paint at an Angle	F5-6
Electric Drills	6-3, F6-2
Electric Grinders	6-4
Engine Maintenance Stand	F9-3
Engine Trailer	F9-12
Equipment, Lubricating	F9-20
Extension Rods for Inside and Depth Micrometers	F3-37
Extension, Proper Application of Force When Using	F8-18
Extractor, Cotter Pin	7-7, F7-11
Extractor, Tap	F4-109
Extractors, Spiral Screw	F4-108
Extractors, Straight Screw	F4-107
F	
Face Pin Spanner Wrench	F4-38
Faulty Patterns and Suggested Corrections	F5-10
File Cleaner	F4-79
File Handle, Use of	F4-75
File Nomenclature	F4-65
File Teeth Spacing and Fineness	F4-67
File Teeth, Single- and Double-Cut	F4-66
File, Curved Tooth	F4-74
File, Flat	F4-70
File, Half-Round	F4-73
File, Mil	F4-69
File, Round	F4-72
File, Square	F4-71
File, Triangular	F4-68
Files	4-11
Filing for a Flat Surface	F4-77
Fillet and Radius Gauges	F3-73, 3-19
Fillet and Radius Gauges, Using	F3-74
Fingers, Mechanical	7-8, F7-12
Fishing Tool, Valve Stem	7-5, F7-9
Flanged Ring Gauge	F3-56
Flares, Single and Double	F4-119
Flaring Tools	4-25

INDEX - CONT

VOLUME 9

Subject — **Paragraph Figure, Table Number**

F - Continued

Flat File F4-70
Flat Parts, Gauging F3-66
Flat Surface, Filing for a F4-77
Flat-Nose Pliers F444
Flush Cutting F4-113
Flushing Paint Gun with Thinner or Solvent (Cup) F5-7
Flushing Paint Gun with Thinner or Solvent (Pressure Tank or Gravity Bucket) F5-8

G

Gauge Tolerances, Ring T3-1
Gauge Tolerances, Snap T3-2
Gauge Types, Ring F3-57
Gauge, Flanged Ring F3-56
Gauge, Plug 3-14
Gauge, Surface F3-45, 3-10
Gauge Thread F3-52
Gauges, Ring F3-55, 3-15
Gauges, Snap F3-59, 3-16
Gauges, Thread 3-13
Gauging Flat Parts F3-66
General
- Electrical Power Tools 6-1
- General Maintenance Tools 4-1
- Ground Support Equipment 9-1
- Measuring Tools 3-1
- Special Aircraft Tools 7-1
- Storage of Ground Support Equipment 9-6
- Tool Procedures and Practices 2-1
- Torque Tools and Torque Principles and Procedures 8-1
- Use Torque Multiplier F8-21

General, Ground Support Equipment 9-1
Grinder, Pneumatic 5-8
Grinders F6-4
Grinding Wheel Installation F6-5
Grinding Wheel, Dressing a F6-6
Grinding, Screwdriver Tip F4-19
GSE - Three Color Camouflage Pattern T9-1
Guns, Paint 5-3

INDEX - CONT

VOLUME 9

Subject — **Paragraph Figure, Table Number**

H

Hacksaw Blade Set F4-97
Hacksaw Blade, Installing a F4-99
Hacksaw, Proper Way to Hold a F4-100
Hacksaws 4-17, F4-96
Half-Pound File F4-73
Hammer Face Substances, Soft-Faced T4-1
Hammer, Ball Peen F4-1
Hammer, Body F4-2
Hammer, Lead or Copper F4-5
Hammer, Riveting F4-3
Hammer, Setting F4-4
Hammer, Soft-Faced F4-6
Hammers and Mallets 4-2
Hand Drill F4-81
Hand Drills 4-12
Hand Grinding of Cutting Edge F4-87
Hand Grinding of Heel to Cutting Edge F4-88
Hand Seamer and Groover 4-27
Handle and Wedges, New F4-11
Handle, Hinged F4-29
Handle, Ratchet F4-27
Handle, Removing Broken F4-10
Handle, Sliding T-Bar F4-28
Handle, Speed F4-30
Heel Angle, Measuring F4-90
Height Gauge, Typical F3-51
Height Gauges 3-12
    Typical F3-51
Hermaphrodite Calipers F3-27
Hexagonal Setscrew Wrench (Allen Wrench) F4-31
Hinged Handle F4-29
Hole Gauges, Small 3-22, F3-79
Hollow Punch F4-64
Hook Spanner Wrench F4-36
Hub Nut Torque Multiplier F8-22

INDEX - CONT

VOLUME 9

Subject — **Paragraph Figure, Table Number**

I

Identification of Parts of Reamers F4-91
Improper Application of Force F8-19
Individual Flaring Tool F4-121
Inside Micrometer F3-35
Installation of Preload Washer on a Bolt F8-32
Installation of Preload Washers on a Stud F8-31
Installing a Hacksaw Blade F4-99
Installing Protractor Head on Rule F3-17
Installing Wooden Wedge F4-12

J

Jack Hydraulic Schematic Diagram F9-6
Jack, 3-Ton, Tripod F9-9
Jack, 5-Ton, Tripod F9-8
Jack, 10-Ton, Self-Contained F9-11
Jack, 12-Ton, Tripod F9-7
Jack, Aircraft Landing Gear F9-10
Jobber's (Machine) Reamer F4-93

K

Knife, Putty F4-52
Knife, Utility F4-50
Knives 4-7
Knives, Pocket F4-51

L

Laying Out Angle F3-24
Lead or Copper Hammer F4-5
Leather Punch 7-13
Level Condition F3-5
Level
- Machinist's Level F3-2
- Master Precision Level F3-1
- Mechanic's Level F3-4
- Striding Level F3-3

Levels 3-2
Locating Diameter of Cylinder F3-15
Lockwire Pliers 7-11, F7-16

INDEX - CONT

VOLUME 9

Subject — **Paragraph Figure, Table Number**

L - Continued

Long-Nose Pliers F4-43
Loosening Protractor Adjustment Screws F3-18
Lubricants for Tapping and Die-Cutting Threads T4-3
Lubricating Equipment F9-20

M

Machine Grinding a Drill Bit F4-85
Magnet, Telescoping 7-9, F7-14
Maintenance Platform, Type B-1 ..... F9-1
Maintenance Stand, Type B-4A F9-2
Maintenance Stand, Engine F9-3
Mallet, Rawhide F4-7
Mallet, Rubber F4-8
Mallet, Tinner's F4-9
Mallets, Hammers and 4-2
Marking 9-5
Marking a Square Line F3-13
Marking Diameter of Cylinder F3-16
Master Precision Level F3-1
Materials, Consumable 1-3
Measuring Control Surface Angle at Full Throw F7-3
Measuring Heel Angle F4-90
Measuring Hole with a Small Hole Gauge F3-80
Measuring Hole with Telescoping Gauge F3-78
Measuring Sheet Metal and Wire F3-72
Mechanic's Level F3-4
Mechanical Fingers 7-8, F7-12
Mechanist's Scribers F3-7
Micrometer Depth Gauge F3-48
Micrometer with Extension Rod, Using Inside F3-40
Micrometer, Reading a Vernier F3-43
Micrometers 3-9
  Depth F3-36
  Extension Rods for Inside and Depth F3-37
  Inside F3-35
  Outside F3-34
  Parts of a Micrometer F3-41
  Reading a Measurement on a Micrometer F3-42
  Reading a Metric Micrometer 3-9f, F3-44
  Using Inside F3-38
  Using Outside F3-39

INDEX - CONT

VOLUME 9

Subject — **Paragraph Figure, Table Number**

M - Continued

Mill File F4-69
Mixing, Painting Requirements 9-3
Multipliers, Torque 8-9

N

New Handle and Wedges F4-11
Nippers and Pincers F4-111, 4-22
Nitrogen Servicing Unit F9-17
Nomenclature, File F4-65
Nonconcentric Attachments to Torque Wrench F8-16
Nozzle Position to Produce Vertical Fan F5-3

O

Offset Screwdriver F4-15
Oil Spray Gun F5-11
Oil Spray Guns 5-4
Open-End Wrench F4-20
Open-End Wrench Jaw Offset F4-21
Operation and Use, Torque Wrench 8-5
Operation of Vernier Calipers F3-31
Outside Micrometer F3-34
Oxygen Servicing Unit F9-24

P

Paint Gun with Thinner or Solvent (Cup), Flushing F5-7
Paint Gun with Thinner or Solvent (Pressure Tank or Gravity Bucket), Flushing F5-8
Paint Gun, Soaking F5-9
Paint Gun, Typical F5-1
Paint Guns 5-3
Painting Requirements 9-3
Parts of a Micrometer F3-41
Pattern, Spray F5-2
Phillips Screwdriver F4-14
Pickler, Pre-Oiler and F9-19
Pin Punch F4-62
Pin Spanner Wrench F4-37
Pinchers, Nippers and 4-22, F4-111

INDEX - CONT

VOLUME 9

Subject — **Paragraph Figure, Table Number**

P - Continued

Pipe and Tube Cutters 4-23
Pipe Cutters F4-114
Placing Snap Gauge on Cylindrical Part F3-67
Pliers 4-5
    Deicer Boot 7-12
    Lockwire 7-11, F7-16
Pliers, Diagonal Cutting F4-42
Pliers, Flat Nose F4-44
Pliers, Long-Nose F4-43
Pliers, Retaining Ring F4-40
Pliers, Round-Nose F4-45
Pliers, Slip-Joint. F4-41
Pliers, Vise-Grip F4-47
Pliers, Water Pump F4-46
Plug Gauges F3-54, 3-14
Plug, Three-Prong Grounded F6-1
Plumb Bobs 3-3, F3-6
Plumb Bobs, Polished Brass F3-6
Plumb Bobs, Solid Steel F3-6
Pneumatic Drill 5-7
Pneumatic Drills F5-15
Pneumatic Grinder 5-8, F5-16
Pneumatic Hammer. 5-9, F5-17
Pneumatic Tools 5-1
Pneumatic Vacuum Cleaner 5-6, F5-14
Pocket Knives F4-51
Polished Brass Plumb Bobs F3-6
Portable Power Supply F9-23
Power Application of Force When Using Extension F8-18
Power Supply, Portable F9-23
Power Wrench Torque Multiplier F8-23
Practices and Procedures, Safety 9-2
Practices, Shop 2-8
Pre-Oiler and Pickler F9-19
Precautions, Safety 5-2
Preload Indicating Washers F8-29
Preload Indicating Washers, Torque Procedures Without a Torque Wrench 8-11
Preset Torque Screwdriver F8-1
Prick Punch F4-58
Progressive Snap Gauge F3-61
Propeller Shaft Runout, Checking F3-76
Propeller Shaft, Dial Indicator Installed on F3-75
Proper Fit of Screwdrivers F4-17

INDEX - CONT

VOLUME 9

Subject — **Paragraph Figure, Table Number**

P- Continued

Proper Procedure for Pulling Adjustable Wrenches F4-35
Proper Way to Hold a Hacksaw F4-100
Protractor 7-2, F7-1
Protractor Adjustment Screws, Loosening F3-18
Protractor Head on Rule, Installing F3-17
Protractor, Bevel F3-12
Protractor, Setting, with Flight Control Surface in Neutral Position F7-2
Punch, Automatic Center F4-60
Punch, Center F4-59
Punch, Drive F4-61
Punch, Hollow F4-64
Punch, Leather 7-13
Punch, Pin F4-62
Punch, Prick F4-58
Punch, Transfer F4-63
Punches 4-10
Purpose
of Manual 1-1
Putty Knife F4-52
Tools on Army Aircraft 2-5

R

Radius Gauges, Fillet and 3-19
Ratchet Handle F4-27
Ratchet Screwdrivers F4-16
Rawhide Mallet F4-7
Reading a Measurement on a Micrometer F3-42
Reading a Measurement on a Vernier Caliper F3-32
Reading a Metric Caliper F3-33
Reading a Metric Micrometer F3-44
Reading a Vernier Micrometer F3-43
Reamer, Adjustable F4-92
Reamer, Brown and Sharpe Tapered F4-94
Reamer, Jobber's (Machine) F4-93
Reamer, Repairman's Hand F4-95
Reamers 4-14
Reamers, Identification of Parts of F4-91
Recommended Torque Values T8-2
Reflectorizing and Checkered Flags 9-4
Removing Broken Handle F4-10

INDEX - CONT

VOLUME 9

Subject — **Paragraph Figure, Table Number**

R - Continued

Repair
- and Calibration 8-8
- Tool, Valve 7-6, F7-10

Rigid Frame Torque Wrench F8-3
Ring Gauge Types F3-57
Ring Gauges 3-15
- Tolerances T3-1

Ring Gauges, Using F3-58
Riveting Hammer F4-3
Roller, Deicer Boot 7-14
Round File F4-72
Round-Nose Pliers F4-45
Rubber Mallet F4-8
Rule Depth Gauge F3-47
Rule, Typical F3-9
Rules, Tapes and 3-5

S

Safety
- Electrical Power Tools 6-2
- Precautions 5-2
- Tool 2-7

Safety Practices and Procedures 9-2
Schematic Diagram, Jack Hydraulic F9-6
Scope of Manual 1-2
Screwdriver Tip Grinding F4-19
Screwdriver, Offset F4-15
Screwdriver, Phillips F4-14
Screwdriver, Preset Torque F8-1
Screwdrivers 4-3
Screwdrivers, Common F4-13
Screwdrivers, Proper Fit of F4-17
Screwdrivers, Ratchet F4-16
Scribers 3-4
Scribers, Mechanist's F3-7
Scribing a Circle with Dividers F3-23
Scribing with an Awl F4-49
Selection, Torque Wrench 8-3
Self-Contained Jack, 10-Ton F9-11
Servicing Unit, Nitrogen F9-17
Servicing Unit, Oxygen F9-24

INDEX - CONT

VOLUME 9

Subject — **Paragraph Figure, Table Number**

S - Continued

Setscrew Wrench (Allen Wrench) Hexagonal F4-31
Setting Hammer F4-4
Setting Height on a Surface Gauge 3-10c, F3-46
Setting Protractor with Flight Control Surface in Neutral Position F7-2
Setting the Center Head F3-14
Shears and Double Flares F4-119
Shears, Double Cutting 4-21
Sheet Metal and Wire Gauge F3-72, 3-18
Sheet Metal and Wire, Measuring F3-72
Shop Practices 2-8
Simple Calipers F3-24
Single- and Double-Cut File Teeth F4-66
Sizes, Drill T4-2
Slide Caliper F3-28
Sliding T-Bar Handle F4-28
Slip-Joint Pliers F4-41
Small Hole Gauge, Measuring Hole with a F3-80
Small Hole Gauges F3-79, 3-22
Snap Gauge for Checking Diameters F3-64
Snap Gauge for Checking Dimension Between Surfaces F3-62
Snap Gauge for Checking Flat or Cylindrical Work F3-63
Snap Gauge, Adjusting the F3-65
Snap Gauge, Progressive F3-61
Snap Gauge, Solid Nonadjustable F3-60
Snap Gauges F3-59, 3-16
  Tolerances T3-2
Soaking a Paint Gun F5-9
Sockets F4-26
Soft-Faced Hammer F4-6
Soft-Faced Hammer Face Substances T4-1
Soldering Tools F7-22, 7-16
Solid Nonadjustable Snap Gauge F3-60
Solid Steel Plumb Bobs F3-6
Solvent, Cleaning Gun F5-12
Spacing and Fineness, File Teeth F4-67
Special Aircraft Tools, General 7-1
Speed Handle F4-30
SPEM Stand F9-4
Spiral Screw Extractors F4-108
Spray Gun, Oil F5-11
Spray Guns, Oil 5-4
Spray Pattern F5-2
Spray Pattern, Adjustment of F5-4

INDEX - CONT

VOLUME 9

Subject — **Paragraph Figure, Table Number**

S - Continued

Spring Divider F3-21
Spring-Joint Calipers F3-25
Square
  Carpenter's F3-10
  Combination F3-11
Square File F4-71
Square Head, Determining Depth with the F3-20
Square Line, Marking a F3-13
Squares 3-6
Stand, SPEM F9-4
Stand, Type D5B Hydraulic Test F9-5
Storage of Ground Support Equipment 9-6
Straight Screw Extractor F4-107
Striding Level F3-3
Stroke Technique, Correct and Incorrect F5-5
Suggested Corrections, Faulty Pattern and F5-10
Surface Gauge 3-10
  Setting Height on a F3-46

T

Tap Extractor F4-109
Tap Extractor, Use of F4-110
Tap Wrenches F4-103
Tapes and Rules 3-5
Tapes, Typical F3-8
Tapping and Die-Cutting Threads, Lubricants for T4-3
Tapping, Correct Drill Sizes for F4-102
Taps and Dies 4-18
Taps F4-101
Telescoping Gauge, Measuring Hole with F3-78
Telescoping Gauges 3-21, F3-77

INDEX - CONT

VOLUME 8

Subject — **Paragraph Figure, Table Number**

T - Continued

Telescoping Magnet 7-9, F7-14
Tensiometer F7-4
Tensiometer Reading in Pounds, Conversion of F7-6
Tensiometer, Cable 7-3
Tensiometer, Using a F7-5
Testing of Torque Tools 8-7
Thickness Gauge 3-17, F3-70
Thread Chasers 4-19, F4-106
Thread Gauge F3-52
Thread Gauges 3-13
Three-Jaw Chuck and Chuck Key F6-3
Three-Prong Grounded Plug F6-1
Tightening Preload Washers F8-33
Tightening to 15-Degree Wrench Arc F8-24
Tightening to 30-Degree Wrench Arc F8-27
Tightening to 60- or 120-Degree Wrench Arc F8-26
Tightening to 90- or 180-Degree Wrench Arc F8-28
Tinner's Mallet F4-9
Tolerances
    Ring Gauges 3-15, T3-1
    Snap Gauges T3-2
Tool Boxes 2-9
Tool Care 2-3
Tool Safety 2-7
Tool Selection 24
Tool Selection 10-2f
Tool Use 2-6
Tool, Double Flaring F4-122
Tool, Individual Flaring Tool F4-121
Tool, Tube Bending 4-26
Tools, Combination Flaring F4-120
Tools, Flaring 4-25
Tools, Pneumatic 5-1
Tools, Soldering F7-22, 7-16
Torque Multiplier Power Wrench 8-10, F8-23
Torque Multiplier, General Use F8-21
Torque Multiplier, Hub Nut F8-22
Torque Multipliers 8-9
Torque Procedures Without a Torque Wrench 8-11
Torque Tool Accuracy Limits T8-1
Torque Tools, Care of 8-6

INDEX - CONT

VOLUME 9

Subject — **Paragraph Figure, Table Number**

T - Continued

Torque Tools, Testing of 8-7
Torque Tools, Types of 8-2
Torque Value, Determining Correct 8-4
Torque Values, Recommended T8-2
Torque Wrench Attachment - Offset Reverse Extension F8-17
Torque Wrench Attachment, Angle Extension F8-20
Torque Wrench Attachments, Concentric F8-15
Torque Wrench Operation and Use 8-5
Torque Wrench Selection 8-3
Torque Wrench - Deflecting Beam with Indicating Dial (Direct Reading with Audible Signal), Type I, Class 2, Style B F8-8
Torque Wrench - Deflecting Beam with Indicator Plate (Direct Reading with Feel Impulse and Audible Signal), Type I, Class 1, Style B F8-6
Torque Wrench - Deflecting Beam with Indicator Plate (Direct Reading), Type I, Class 1, Style A F8-5
Torque Wrench - Rigid Case with Indicator Dial (Direct Reading) Type II, Style A F8-9
Torque Wrench - Rigid Case with Indicator Dial, Presetting Torque Dial (Direct Reading with Audible Signal),Type II, Style B F8-10
Torque Wrench - Rigid Case with Presetting Dial (Direct Reading with Flashlight Signal), Type II, Style C F8-11
Torque Wrench - Rigid Case, Micrometer-Style Torque Presetting, Audible Signal, Plain Head Type III, Class 1 ..... F8-12
Torque Wrench - Rigid Case, Micrometer-Style Torque Presetting, Audible Signal, Ratchet Reversible Head, Type III, Class 2 ..... F8-13
Torque Wrench - Rigid Case, Preset Torque, Audible Signal, Type V F8-14
Torque Wrench, Audible-Indicating F8-4
Torque Wrench, Deflecting Beam F8-2
Torque Wrench, Nonconcentric Attachments to F8-16
Torque Wrench, Rigid Frame F8-3
Torque Wrenches - Deflecting Beam with Indicating Dial (Direct Reading), Type I, Class 2, Style A F8-7

INDEX - CONT

VOLUME 9

Subject — **Paragraph Figure, Table Number**

T - Continued

Tow Vehicle, Type MB-4 ..... F9-21
Towbar F9-16
Trailer, Engine F9-12
Trammel F3-30
Transfer Calipers F3-26
Transfer Punch F4-63
Triangular File F4-68
Tripod Jack, 3-Ton F9-9
Tripod Jack, 5-Ton F9-8
Tripod Jack, 12-Ton F9-7
Tube Beading Tool 4-26, F4-123
Tube Bender F4-117
Tube Benders 4-24
Tube Cutter, Cutting Tube F4-116
Tube Cutters F4-115
Tube Cutters, Pipe and 4-23
Tube, Bending F4-118
Tubing, Beading Large F4-124
Turnbuckle Wrench 7-4, F7-8
Type I, Class 1, Style A Torque Wrench - Deflecting Beam with Indicator Plate (Direct Reading) F8-5
Type I, Class 1, Style B Torque Wrench - Deflecting Beam with Indicator Plate (Direct Reading and Feel Impulse and Audible Signal) F8-6
Type I, Class 2, Style A Torque Wrenches - Deflecting Beam with Indicating Dial (Direct Reading) F8-7
Type I, Class 2, Style B Torque Wrench - Deflecting Beam with Indicating Dial (Direct Reading with Audible Signal) F8-8
Type II Style A Torque Wrench - Rigid Case with Indicator Dial (Direct Reading) F8-9
Type II, Style B Torque Wrench - Rigid Case with Indicator Dial, Presetting Torque Dial (Direct Reading with Audible Signal) F8-10
Type II, Style C Torque Wrench - Rigid Case with Presetting Dial (Direct Reading with Flashlight Signal) F8-11
Type III, Class 1 Torque Wrench Rigid Case, Micrometer-Style Torque Presetting, Audible Signal, Plain Head F8-12
Type III, Class 2 Torque Wrench - Rigid Case, Micrometer-Style Torque Presetting, Audible Signal, Ratchet Reversible Head F8-13
Type B-1 Maintenance Platform F9-1
Type B-4A, Maintenance Stand F9-2
Type D5B Hydraulic Test Stand F9-5

INDEX - CONT

VOLUME 9

Subject — **Paragraph Figure, Table Number**

T - Continued

Type MB-4 Tow Vehicle F9-21
Type V Torque Wrench - Rigid Case, Preset Torque, Audible Signal F8-14
Types of Ground Support Equipment 9-9
Types of Tools Used in Army Aviation 2-2
Types of Torque Tools 8-2
Typical Air Compressors F9-14
Typical Aircraft Pre-Heater F9-15
Typical Cable Rigging Tension Chart F7-7
Typical Cranes and Hoists F9-18
Typical Drill Bit F4-83
Typical Height Gauge F3-51
Typical Paint Gun F5-1
Typical Rule F3-9
Typical Tapes F3-8
Typical Tool Boxes F2-1

U

Use of Tap Extractor F4-110
Using a Bench Vise F4-54
Using a Crowfoot Wrench F7-21
Using a File Handle F4-75
Using a Tensiometer F7-5
Using a Thickness Gauge F3-71
Using a Vernier Depth Gauge F3-50
Using Carnage Clamp F4-56
Using Deicer Boot Pliers F7-17
Using Deicer Boot Roller F7-19
Using Drill Grinding Gauge F4-89
Using Fillet and Radius Gauges F3-74
Using Inside Micrometer F3-38
Using Inside Micrometer with Extension Rod F3-40
Using Leather Punch F7-18
Using Offset Screwdriver F4-18
Using Outside Micrometer F3-39
Using Ring Gauges F3-58
Using Thread Gauges F3-53
Usual Cutting Edge and Heel Angles F4-86

INDEX - CONT

VOLUME 9

Subject — **Paragraph Figure, Table Number**

V

V-Grooves in Drill Jaws F4-82
Vacuum Cleaner, Pneumatic 5-6
Valve Repair Tool 7-6, F7-10
Valve Stem Fishing Tool 7-5, F7-9
Vernier Caliper F3-29
Vernier Caliper, Operation of F3-31
Vernier Caliper, Reading a Measurement on a F3-32
Vernier Depth Gauge F3-49
Vernier Depth Gauge, Using a F3-50
Vertical Fan, Nozzle Position to Produce F5-3
Vise, Bench F4-53
Vise-Grip Pliers F4-47

W

Washer on a Bolt, Installation of Preload F8-32
Washers on a Stud, Installation of Preload F8-31
Washers, Action of Preload Indicating F8-30
Washers, Preload Indicating F8-29
Washers, Tightening Preload F8-33
Water Pump Pliers F4-46
Wedge, Installing Wooden F4-12
Wing Divider F3-22
Wire Gauge, Sheet Metal and 3-18, F3-72
Wire, Cutting F4-112
Wrench Arc, Alternate Method for Tightening to 15 Degree F8-25
Wrench Arc, Tightening to 15-Degree F8-24
Wrench Arc, Tightening to 30-Degree F8-27
Wrench Arc, Tightening to 60- or 120-Degree F8-26
Wrench Arc, Tightening to 90- or 180-Degree F8-28
Wrench Jaw Offset, Open-End F4-21
Wrench, Adjustable F4-25

INDEX - CONT

VOLUME 9

Subject — **Paragraph Figure, Table Number**

W - Continued

Wrench, Adjustable Hook Spanner F4-39
Wrench, Combination F4-24
Wrench, Crowfoot F7-20
Wrench, Face Pin Spanner F4-38
Wrench, Hook Spanner. F4-36
Wrench, Open-End F4-20
Wrench, Pin Spanner F4-37
Wrench, Torque Multiplier Power 8-10
Wrench, Turnbuckle 7-4, F7-8
Wrench, Use of Box-End F4-33
Wrench, Use of Open-End F4-32
Wrench, Use of Socket F4-34
Wrenches 4-4
Wrenches, Box-End F4-22
Wrenches, Crowfoot 7-20
Wrenches, Proper Procedure for Pulling Adjustable F4-35
Wrenches, Tap F4-103

INDEX - CONT

VOLUME 10

Subject — **Paragraph Figure, Table Number**

A

Abrasion Resistance 5-2l
Acceptability Limits, Rivet F7-22
Acceptable Spotweld Spacing 12-6a
Access Door, Flush F8-8
Acrylic Plastic, Minimum Annealing Time T10-4
Acrylic Plastics, Drill for F10-3
Acrylic Plastics, Oven Temperatures for T10-1
Addition of Weights 11-4c
Adhesives and Resins 9-4
  Application 9-4e
  Combination or Two-Step Adhesives 9-4b
  High-Temperature Setting Adhesives 9-4a
  Room Temperature Setting Adhesives 9-4c
  Storage 9-4d
After Deburring F7-50
Aging Time and Temperature (Aluminum Alloys) 5-7f
Aircraft Mating Jig F8-1
Aircraft Metals, Shaping 6-2
Aircraft Plastics, General 10-1
Aircraft Structures, General 4-1
Airframe Sheet Metal Repair, General 8-1
Airframe Sheet Metal, Basic Principles of Repair 8-2
Airplane Structural Parts F4-5
Airplanes (Fuselage) 4-2b
Alclad Alloys, Reheat Treatment of T5-12
Alclad Construction F5-8
Allowable Percentage of Defective Spotwelds 12-6b
Allowance, Bend, 90-Degree Bend F6-3
Allowance, Bend, Table T6-1
Alloy Characteristics and Uses (Aluminum) 5-7b
Alloying 5-4a
Alloying Elements (for Steel) 5-6b
Alloying Elements, Major T5-5
Alloys, Aluminum 5-7
Alloys, Copper 5-10
Alloys, Magnesium 5-8
Alloys, Metals and 5-4
Alloys, Titanium 5-9
Alternate Transparent Plastic Plug Repair 10-13b
Aluminum Alloy Designations and Conversions to 4 Digit System T5-6
Aluminum Alloy Facing Material 9-3a
Aluminum Alloy Rivets, Single Shear, Strength of T7-2
Aluminum Alloy Sheet Substitution 5-7i

INDEX - CONT

VOLUME 10

Subject — **Paragraph Figure, Table Number**

A - Continued

Aluminum Alloy, Hardness Conversion for F5-16
Aluminum and Aluminum Alloys 5-7
- Aging Time and Temperature 5-7f
- Alloy Characteristics and Uses 5-7b
- Aluminum Alloy Sheet Substitution 5-7i
- Corrosion Resistance 5-7c
- Heat-Treatment Methods 5-7e
- Heat-Treating Procedures 5-7g
- Identification 5-7a
- Insulation of Dissimilar Metals 5-7h
- Material Substitution 5-7j
- Shop Working Practice 5-7d

Aluminum, Bare, Sheet, Plate, Extrusions, and Forgings, Rockwell Hardness Values for T5-21
Aluminum Identification Marking Example F5-7
Aluminum Lockbolt Rivet Gun, Pull- and Blind-Type F7-73
Aluminum Sheet and Plate, 0.050 Inch Minimum, Rockwell Hardness Values for T5-20
Aluminum, Model B, Hardness Range F5-13
Aluminum-Alloy Sheet Substitution T5-14
Annealing 10-10c
Application (of Adhesives and Resins) 9-4e
Approved Edge Attachment for Laminated Enclosure F10-19
Approved Edge Attachment for Monolithic Enclosure F10-18
Ashing 10-14b
Assembling (Joined Plastics) 10-9h
Assembly Tools, Cherry F7-45
Assembly, Empennage F4-14
Automatic Center Punch F3-18
Aviation Snips 3-4f, F3-12

B

Balance Considerations, Surface 11-2
Balanced and Unbalanced Conditions F11-4
Balancing Jig, Field-Expedient F11-6
Balancing Principles 11-3
- Effects of Moments 11-3a
- Effects of Weight and Distance 11-3b

Band Saw 3-5d
Band Saw, Contour F3-27
Bandsaw Widths for Various Radii of Cuts (of Plastic) T10-3
Bar Folding Machine 3-6a, F3-31
Bars, Bucking F7-6
Basic Part Numbers, Jo-Bolt F7-81
Basic Principles of Repair (of Airframe Sheet Metal) 8-2

INDEX - CONT

VOLUME 10

Subject — **Paragraph Figure, Table Number**

B - Continued

Maintaining Original Contour 8-2b
Maintaining Original Strength 8-2a
Minimizing Weight 8-2c
Beaded Skin, Patch Repairs to F8-57
Beads, Crimps, Relief Holes, and Riveted Angles, Nose Rib Using F6-22
Bearing Strength (Pounds) T7-3
Bench Grinder F3-30
Bench Shears 3-4e, F3-11
Bend Allowance 6-3b
Bend Allowance Table T6-1
Bend Allowance, 90-Degree Bend F6-3
Bending 5-3e, F5-5
Bending Sheet 6-3
Bend Allowance 6-3b
Brake or Sight Line 6-3d
Duplicating Patterns 6-3g
Flat Pattern Layout 6-3e
Locating Brake or Sight Line 6-3f
Radius of Bend 6-3a
Setback 6-3c
Blanket and Seals 9-9e
Blind-Type Lockbolt Numbering System T7-24
Blind-Type Lockbolt, Installation F7-77
Blind-Type Lockbolts, Drilling Procedures for T7-30
Blind-Type Lockbolts, Grip Range for T7-27
Block, Bumping F6-26
Blocks, Forming F3-23
Bolt and Rivet Mounting (on Transparent Plastics) 10-16c
Bolt Installation, Typical (in Transparent Plastic) F10-17
Bonded Former Assemblies 9-6p
Bonded Former Repair (Cap) F9-13
Bonded Former Repair (Web) F9-14
Bonded Magnesium Panel Repair F9-3
Bonded Magnesium Panels 9-6d
Bonded Stiffeners 9-6c
Bonding Procedures 10-11
Bonding Procedures for Acrylic Plastic MIL-P-5425 ..... 10-11a
Bonding Procedures for Acrylic Plastic MIL-P-8184 ..... 10-11b
Bonding Procedures for Acrylic Plastic MIL-P-5425 ..... 10-11a
Bonding Procedures for Acrylic Plastic MIL-P-8184 ..... 10-11b
Bowed Steel Tubes, Straightening F8-64
Box Beam Wing Construction F4-10
Brake Line, Locating, in the Brake F6-11
Brake or Sight Line 6-3d, F6-5

INDEX - CONT

VOLUME 10

Subject — **Paragraph Figure, Table Number**

B - Continued

Brake or Sight Line of Flange, Locating F6-10
Brake, Cornice F3-32
Brass and Mild Steel, Hardness Conversion for F5-15
Bucking Bar Weights, Recommended T7-6
Bucking Bars F7-6
Buckles, Working Out F6-17
Bulkhead and Skin Repair F8-28
Bulkhead Flanged Member Repairs F8-26
Bulkhead Installation F4-18
Bulkhead Repair 8-9i
Bulkheads, Frames, and Formers 4-8a
Bumping 6-4a
Bumping Block F6-26
Bumping, Sandbag F6-29
Burning (of Plastics) 10-4b
Burrs After Drilling F7-49

C

Cabin and Tail Cone Sections F4-4
Calculation Method (of Balancing) F11-8
Camlock Fastener F7-107
Camlock Fasteners 7-15b
Camlock Punch, Use of F7-109
Camlock Stud Installation F7-112
Capacity, Tool, Chart (for Rivets) T7-14
Catcher Bag, Stem 670A20 ..... F7-44
Cemented Assemblies, Jigs for Holding F10-9
Cemented Joint, Effect of Heat Treating on a F10-10
Cemented Plastic Joint ..... F 10-4
Cementing Procedures 10-9
- Assembling 10-9h
- Direct Application Method 10-9d
- Fitting 10-9e
- Glue Method 10-9c
- Jigs 10-9i
- Masking 10-9f
- Soak Method 10-9b
- Soaking 10-9g
- Type of Cement 10-9a

Center Punch F3-17
Center Punch for Drilling F7-15
Center Punch, Automatic F3-18
Centering Inner Sleeve in Steel Tube F8-68

INDEX - CONT

VOLUME 10

Subject — **Paragraph Figure, Table Number**

C - Continued

Chamfered Flanging Block F6-32
Channel Repair by Insertion F8-30
Channel Repair by Patching F8-29
Channel, Sample F6-6
Characteristics (of Aircraft Plastics) 10-2
Characteristics (of Titanium Alloys) 5-9b
Chart, Setback - K - T6-2
Chem-Milled Skin Repair 8-6k, F8-2
Chem-Milling 6-2b
Chemical Composition (Copper Alloys) by Trade Name T5-16
Chemical Reaction (of Plastics) 10-4e
Cherry Assembly Tools F7-45
Cherry Grip Gauge 269C3, Use of F7-36
CherryMax Blind Heads, Typical F7-53
CherryMAX Cross Reference (Part Number/Military Standard Part Number) T7-9
CherryMAX Drilling Dimensions T7-15
CherryMAX Inspection 7-8e
CherryMAX Installation 7-8d
CherryMAX Part Number Breakdown T7-10
CherryMAX Removal 7-8g
CherryMAX Removal F7-55
CherryMAX Rivet F7-31
CherryMAX Rivets 7-8
- CherryMAX Inspection 7-8e
- CherryMAX Installation 7-8d
- CherryMAX Removal 7-8g
- CherryMAX Tooling 7-8c
- CherryMAX Troubleshooting 7-8f
- Identification 7-8a
- Selection 7-8b

CherryMAX Rivet Shaving F7-51
CherryMAX Sleeve Stretch Marks F7-54
CherryMAX Stem and Collar Flushness F7-52
CherryMAX Tooling 7-8c
CherryMAX Troubleshooting 7-8f, T7-17
CherryMAX, Countersinking Dimensions for F7-46
Circle Snips 3-4h, F3-14
Circular Damage Repair for Lightly Stressed Areas F8-46
Circular Damage Repair in Heavily Stressed Area F8-51
Circular External Repair 8-8b, F8-11
Clamp Pliers F3-9
Classification of Damage (to Sandwich Construction) 9-5
- Coin-Tapping Technique 9-5a
- Dents 9-5e

INDEX - CONT

VOLUME 10

Subject — **Paragraph Figure, Table Number**

C - Continued

Double Skin Damage 9-5h
Large Single Skin Damage 9-5g
Missing Core 9-5b
Scotchply Edge Member and Corfil Edge Filler Damage 9-5i
Skin Core Voids 9-5c
Skin Doubler Voids 9-5d
Small Single Skin Damage 9-5f
Unbonding and Ply Separation 9-5j
Class I Damage (of Fiber Laminate) F9-19
Class I Repair (of Radomes) 9-9i
Class II Damage (of Fiber Laminate) F9-20
Class II or Class III Repair to Plastic with Fluted Core 9-9m
Class II or Class III Repair to Plastic with Foamed-In Core 9-9l
Class II Repair (of Radomes) 9-9j
Class II Repair (of Radomes), Typical Scarf Method for F9-26
Class III Damage (of Fiber Laminate) F9-21
Class III Repair (of Radomes) 9-9k
Classes of Repair (of Fiber Laminate) 9-9c
Classification of Damage (Impregnated Glass Cloth Parts) 9-8a
Classification, of Damage (Airframe Sheet Metal Repair) 8-5
Cleaning (of Glass Windshields) 10-17b
Cleaning (Plastic Enclosures) 10-15a
Cleanliness of Repair Area 9-6a
Cleco Fastener F3-7
Cleco Fasteners Pliers F3-8
Codes, Color (for Aluminum) T5-7
Coin Dimpling F7-10
Coin-Tapping Technique 9-5a
Cold Climate Precautions 10-1 5e
Cold Forming (of Plastics) 10-7a
Cold-Working 5-5c
Collar Numbering System, Lockbolt T7-25
Color Codes (for Aluminum) T5-7
Combination or Two-Step Adhesives 9-4b
Commonly Used Alloys (Magnesium) 5-8b
Completed Double Face Patch Repair F9-27
Compression F5-2
Compressive Strength 5-2c
Concave Flange, Forming a F6-24
Conductivity 5-2m
Construction (Sandwich) 9-1a
Construction Materials (Fuselage) 4-2c
Construction, Alclad F5-8
Construction, Monocoque F4-1

INDEX - CONT

VOLUME 10

Subject — **Paragraph Figure, Table Number**

C - Continued

Construction, Rib F4-13
Construction, Semi-Monocoque F4-2
Construction, Spar F4-12
Consumable Materials 1-3
Contour Band Saw F3-27
Contraction and Expansion Allowances (for Transparent Plastics) T10-5
Control Surface, Establishing Neutral Position of F11-7
Control Surfaces, Flight 4-7, F4-16
Control Surface Static Balance F11-1
Conversions to 4 Digit System, Aluminum Alloy Designations and T5-6
Convex Flange, Forming a F6-25
Copper and Copper Alloys 5-10
  Identification 5-10a
  Major Alloying Elements 5-10b
Copper, Model BB-75, Hardness Range F5-14
Core Materials 9-2
  Foamed-In-Place Core Materials 9-2c
  Foamed or Cellular Core Materials 9-2b
  Honeycomb Core Materials 9-2d
  Natural Core Materials 9-2a
Cornice Brake 3-6b, F3-32
Correcting Oval Shaped Steel Tubing Distortion F8-63
Correctly and Incorrectly Driven Rivets 7-5a, F7-20
Corrosion 8-3a
Corrosion Resistance (of Aluminum Alloys) 5-7c
Corrosion Resistance 5-2k
Corrosion Treatment 8-6h
Countersink, Standard F7-7
Countersink, Stop F7-8
Countersinking Dimensions (100 Degrees) for CherryMAX F7-46
Countersinking F7-17
Countersinking Practices F7-18
Countersinking, Incorrect F7-47
Countersinks 3-4i, F3-15
Countersinks for Shaving, Recommended T7-16
Countersunk Head Nominal Diameter CherryMAX Rivet F7-32
Countersunk Head Oversize Diameter, CherryMAX Rivet F7-34
Countersunk Head Rivet, Removal of F7-24
Countersunk-Head Rivet Removal 7-6b
Crack or Scratch Repair F9-5
Crack Repair for Lightly Stressed Areas F8-47
Cracking, Rivet Head F7-21
Cracks (in Plastics) 10-12d

INDEX - CONT

VOLUME 10

Subject — **Paragraph Figure, Table Number**

C - Continued

Crazing 10-12c
Crimping 64b, F6-12
Crimps and Beads, Nose Rib with F6-21
Cross Reference of Old and New Color Code (for Aluminum) T5-8
Cross Reference, Old Color Code (Steel) T5-3
Cross Reference, CherryMAX (Part Number/Military Standard Part Number) T7-9
Curing and Heat Treatment (of Plastics) 10-10
- Annealing 10-10c
- Further Treatment 10-10b
- Temperature 10-10a

Curved Formed or Extruded Angles 6-5b
Cushion Thickness F10-8
Cushion, Formation of, on Acrylic Plastic by Immersion in Cement F10-5
Cutout Repair, Rectangular Damage (Lightly Stressed) F8-44
Cutting Acrylic Plastic Sheets, Types of Circular Saw Blades for T10-2
Cutting Techniques (for Plastics) 10-8
- Drilling 10-8f
- General Precautions 10-8a
- Layout 10-8b
- Routers 10-8d
- Saws 10-8c
- Scribing and Sanding 10-8e

D

Damage (to Sandwich Construction), Classification of 9-5
Damage Classification 8-5
- Damage Repairable by Insertion 8-5c
- Damage Repairable by Patching 8-5b
- Damage Requiring Replacement of Parts 8-5d
- Negligible Damage 8-5a

Damage Evaluation 8-6b
Damage Inspection 8-4
Damage Near Existing Structure (Lightly Stressed), Repair of F8-45
Damage Removal 8-6c
Damage Repair (Impregnated Glass Cloth Parts) 9-8b
Damage Repair Near Adjacent Member in Heavily Stressed Area F8-52
Damage Repair Near Existing Structure in Heavily Stressed Areas F8-49
Damage Repair Near Primary Horizontal Member in Heavily Stressed Area F8-50
Damage Repairable by Insertion 8-5c
Damage Repairable by Patching 8-5b
Damage Requiring Replacement of Parts 8-5d
Damage, Class I (of Fiber Laminate) F9-19
Damage, Class II (of Fiber Laminate) F9-20

INDEX - CONT

VOLUME 10

Subject — **Paragraph Figure, Table Number**

D - Continued

Damage, Class III (of Fiber Laminate) F9-21
Damaged Face Plies, Removal of, by Scarf Method F9-25
Damaged Honeycomb Skin F9-1
Damaged Swage in Aileron and Flap Skin, Patch Repair to F8-58
Deburring, After F7-50
Deep Scratches, Sanding F10-11
Delamination and Discoloration 10-12e
Dent at a Steel Tube Cluster Joint, Reinforcing a F8-65
Dent or Crack, Sharp, in Length of Steel Tubing, Repair of F8-66
Dents (in Sandwich Construction) 9-5e
Dents and Creases, Repair of F8-32
Design (Sandwich Construction) ..... 9-1 b
Determining Rivnut Grip Length F7-57
Die, Joggling F6-30
Dimensions, Drill Bit F7-16
Dimpling and Reaming F7-48
Dimpling F7-9
Dimpling, Coin F7-10
Direct Application Method (Cementing) 10-9d
Double Face Patch Repair, Completed F9-27
Double Row of Rivets, Rivet Spacing for Repair with F8-42
Double Skin Damage 9-5h
Double Skin Repair (Flush) F9-10
Double Skin Repair (Nonflush) F9-11
Drill Angle for Stainless Steel F6-1
Drill Bit Dimensions F7-16
Drill for Acrylic Plastics F10-3
Drill Press F3-29
Drill Sizes for Various Diameter Rivets T7-4
Drill Sizes, Hole and, for Self-Plugging (Friction Lock) Rivets T7-8
Drilling (for Olympic Blind Rivets) 7-11d
Drilling (Plastics) 10-8f
Drilling Dimensions, CherryMAX T7-15
Drilling Material F7-68
Drilling Procedures for Blind-Type Lockbolts T7-30
Drilling Procedures for Pull- and Stump-Type Lockbolts T7-29
Drilling Spotwelds 12-2
Drilling, Burrs After F7-49
Drilling, Center Punch for F7-15
Drills and Drill Presses 3-5e
Drive Punch F3-19
Driving Hi-Shear Rivet F7-63
Ductility 5-2f

INDEX - CONT

VOLUME 10

Subject — **Paragraph Figure, Table Number**

D - Continued

Duplicating Patterns 6-3g
Dynamic Balance 11-2b
Dzus Fastener (Stud, Grommet, and Receptacle) F7-95
Dzus Fastener (Stud, Grommet, and Receptacle), Installation Tools for F7-104
Dzus Fastener (Stud, Grommet, and Spring) F7-96
Dzus Fastener Head Styles F7-97
Dzus Fastener Installation Secondary Procedures F7-103
Dzus Fastener Installation, Wing-Type F7-102
Dzus Fastener Receptacle, Installation of F7-105
Dzus Fastener Stud and Grommet, Installation of F7-106
Dzus Fasteners 7-15a
Dzus Fasteners, Installation of Type A-AJ F7-100
Dzus Fasteners, Installation of Type F-FA-FJ F7-101
Dzus Fasteners, Installation Tools for Type A-AJ and F-FA-FJ F7-98

E

Edge Attachment, Typical Sighting Dome F10-20
Edge Band Sealing, Typical F9-29
Edge Distance, Rivet F7-4
Edge Preparation, Edge Patch F8-6
Effect of Heat Treating on a Cemented Joint F10-10
Effects of Moments 11-3a
Effects of Weight and Distance 11-3b, F11-3
Elasticity 5-2d
Eliminating Gaps and Leveling Installations 8-9aa, F8-59
Empennage 4-6
Empennage Assembly F4-14
Enclosure, Laminated, Approved Edge Attachment for F10-19
Enclosure, Monolithic, Approved Edge Attachment for F10-18
Enclosures, Acrylic Plastic, Maintenance of on Army Aircraft 10-15
Engine Mount (Tubing) 8-11a
Engine Mount F4-6
Engine Mounts 4-3
  Maintenance 4-3c
  Piston-Engine Mounts 4-3a
  Turbine-Engine Mounts 4-3b
Equipment, Shop (Sheet Metal) 2-2, 3-1
Establishing Neutral Position of a Control Surface F11-7
Example of Structural Tubing F8-62
Expansion and Contraction Allowances (for Transparent Plastics) T10-5
Expansion and Contraction Allowances (of Transparent Plastics) 10-16b
External and Internal Repairs 8-9
External Repair, Circular F8-11

INDEX - CONT

VOLUME 10

Subject — **Paragraph Figure, Table Number**

F

Face Plies, Replacing F9-24
Facing Materials 9-3
- Aluminum Alloy Facing Material 9-3a
- Glass Fiber Mat Facing Material 9-3f
- Magnesium Alloy Facing Material 9-3c
- Plywood Facing Material 9-3d
- Resin-Impregnated Glass Cloth Facing Material 9-3e
- Steel Facing Material 9-3b

Factors in Determining Rivet Length F7-3
Failure, Spotweld 12-4
Failure, Spotweld, with No Skin Breaks 12-5
Fastener, Camlock F7-107
Fastener, Cleco F3-7
Fastener, Dzus (Stud, Grommet, and Receptacle) F7-95
Fastener, Dzus (Stud, Grommet, and Spring) F7-96
Fastener, Dzus, Head Styles F7-97
Fasteners, Hi-Lock 7-14
Fasteners, Turn-Lock 7-15
Fiber Laminate Material Repair 9-9
- Blanket and Seals 9-9e
- Class I Repair 9-9i
- Class II Repair 9-9j
- Class II or Class III Repair to Plastic with Foamed-In Core 9-9l
- Class II or Class III Repair to Plastic with Fluted Core 9-9m
- Class III Repair 9-9k
- Classes of Repair 9-9c
- General Principles of Materials and Repair Procedures 9-9d
- General Repair Consideration 9-9g
- General Repair Requirements 9-9a
- Inspection after Repair 9-9r
- Materials Used in Repair 9-9b
- Parting Films and Compounds 9-9f
- Procedure for Edge Band Sealing 9-9q
- Procedure for Obtaining Void-Free Laminate 9-9p
- Procedure for Preventing Moisture and Oil Contamination 9-9o
- Repair of Pre-Drilled Attachment Holes 9-9n
- Repair Procedures 9-9h

Field-Expedient Balancing Jig F11-6
Finishing Procedures 10-14
- Ashing 10-14b
- Machine Buffing 10-14c
- Polishing 10-14d
- Sanding 10-14a

First Flange, Layout of F6-7

INDEX - CONT

VOLUME 10

Subject — **Paragraph Figure, Table Number**

F - Continued

Fishmouth Splice, Steel Tube, Using Large Diameter Replacement Tube F8-70
Fitting (Cementing) 10-9e
Flanged Member Repair, Bulkhead F8-26
Flanging Block, Chamfered F6-32
Flat Pattern Layout 6-3e
Flexing (of Plastics) 10-4d
Flight Control Surfaces 4-7, F4-16
Floor Channel Repair 8-9o, F8-36
Floor Repair, Metal-Covered Wooden 9-7
Flush Access Door F8-8
Flush Head Jo-Bolts, Grip Ranges, Sizes, and Diameters of F7-83
Flush Patch F8-5
Flush Patch Repair Procedure F8-7
Flush-Head Jo-Bolt F7-78
Foamed or Cellular Core Materials 9-2b
Foamed-In-Place Core Materials 9-2c
Folding 6-4e
Forces, Stress and Strain 5-3
Forgings, Rockwell T5-21
Formation of Cushion on Acrylic Plastic by Immersion in Cement F10-5
Formed Angle, Stringer Repair with F8-17
Formed Patch, Rivet Spacing for Repair Using F8-43
Formed Sections (of Stored Plastics) 10-5d
Former and Frame Installation F4-17
Former Repair 8-9h, F8-25
Former Repair, Bonded (Cap) F9-13
Former Repair, Bonded (Web) F9-14
Former, Slip Roll F3-33
Forming (General) 6-1
Forming (of Aircraft Metals) 6-2a
Forming a Concave Flange F6-24
Forming a Convex Flange F6-25
Forming a Flanged Angle by Shrinking F6-16
Forming a Flanged Angle by Stretching F6-18
Forming Blocks 3-4k, F3-23
Forming Blocks, Metal and F6-23
Forming by Bumping 6-5e
Forming Curved Flanged Parts 6-5d
Forming Flanged Angles 6-5c
Forming Methods (for Plastics) 10-7d
Forming of Plastics 10-7
- Cold Forming 10-7a
- Forming Methods 10-7d
- Forms 10-7c

INDEX - CONT

VOLUME 10

Subject — **Paragraph Figure, Table Number**

F - Continued

Heating for Forming 10-7b
Forming Operations 6-4
Bumping 6-4a
Crimping 6-4b
Folding 6-4e
Shrinking 6-4d
Stretching 6-4c
Forming Procedures, Hand 6-5
Forms (for Plastics) 10-7c
Frame and Former Installation F4-17
Frame and Nonstressed Skin Repair F8-38
Frame and Skin Repair F8-27
Frame and Stringer Joint, Repair of F8-35
Friction Lock (Self-Plugging Rivets) 7-7
Further Treatment (of Heat-Treated Plastics) 10-10b
Fuselage 4-2
Airplanes 4-2b
Construction Materials 4-2c
Helicopters 4-2a

G

Gauge, Radius F3-6
General Precautions (Cutting Plastics) 10-8a
General Principles of Materials and Repair Procedures (with Fiber Laminate) 9-9d
General Repair Consideration (for Radome Repair) 9-9g
General Repair Practices 8-6
Chem-Milled Skin Repair 8-6k
Corrosion Treatment 8-6h
Damage Evaluation 8-6b
Damage Removal 8-6c
Repair Material Selection 8-6d
Repair Parts Layout 8-6e
Rivet Selection 8-6f
Rivet Spacing and Edge Distance 8-6g
Riveting 8-6i
Structural Support During Repair 8-6a
Tolerance 8-6j
General Repair Requirements (Fiber Laminate) 9-9a
General Shop Rules (Sheet Metal Shop) 2-1
Responsibility 2-1a
Shop Housekeeping 2-1b
Shop Safety 2-1c

INDEX - CONT

VOLUME 10

Subject — **Paragraph Figure, Table Number**

G - Continued

Shop Tools and Materials 2-1d
General, Aircraft Plastics 10-1
General, Aircraft Structures 4-1
General, Airframe Sheet Metal Repair 8-1
General, Forming 6-1
General, Rebalancing Movable Surfaces 11-1
General, Rivets and Riveting Techniques 7-1
General, Sandwich Construction Repair 9-1
General, Shop Equipment 3-1
General, Spotwelds 12-1
General, Structural Metals 5-1
Glass Cloth Repair of Lack-of-Material Damage F9-18
Glass Cloth Repair of Large Crack or Perforation F9-17
Glass Cloth Repair of Small Crack F9-16
Glass Fiber Mat Facing Material 9-3f
Glass Windshields 10-17
Cleaning 10-17b
Inspection 10-17a
Removal and Installation 10-17c
Glue Method 10-9c
Grinder, Bench F3-30
Grinding and Sanding Machines 3-5f
Grip Lengths for Solid Shank Rivets T7-1
Grip Lengths, Hi-Lok F7-90
Grip Lengths, Jo-Bolts F7-82
Grip Range (CherryMAX Rivets) T7-11
Grip Range (Olympic Blind Rivets) 7-11b
Grip Range for Blind-Type Lockbolts T7-27
Grip Range for Olympic Rivets T7-20
Grip Range for Pull- and Stump-Type Lockbolts T7-26
Grip Ranges, Sizes, and Diameters of Flush Head Jo-Bolts F7-83
Grip Ranges, Sizes, and Diameters of Hex Head Jo-Bolts F7-84
Grip Ranges, Sizes, and Diameters of Millable Hex Head Jo-Bolts F7-85

H

Hammers, Peening with F7-110
Hand Forming Procedures 6-5
Curving Formed or Extruded Angles 6-5b
Forming by Bumping 6-5e
Forming Curved Flanged Parts 6-5d
Forming Flanged Angles 6-5c

INDEX - CONT

VOLUME 10

Subject — **Paragraph Figure, Table Number**

H - Continued

Joggling 6-5f
Lightening Holes 6-5h
Relief Holes 6-59g
Straight Line Bends 6-5a
Hand Router Template for Milling Plug Cavity F10-15
Hand Shears 3-4d, F3-10
Hand Tools (for Riveting) 7-4a
Hand-Type Tester, Webster F5-10
Handling and Storage (of Plastics) 10-5
Hand Tools and Devices 3-4
Aviation Snips 3-4f
Bench Shears 3-4e
Circle Snips 3-4h
Countersinks 3-4i
Forming Blocks 3-4k
Hand Shears 3-4d
Micrometers 3-4a
Punches 3-4j
Radius Gauge 3-4b
Sheet Metal Holders 3-4c
Straight Snips 3-4
Hardness Conversion for Aluminum Alloy F5-16
Hardness Conversion for Brass and Mild Steel 5-13e
Hardness Conversion for Brass and Mild Steel F5-15
Hardness Range (for Aluminum) 5-13c
Hardness Range (for Copper) 5-13d
Hardness Range, Aluminum, Model B F5-13
Hardness Range, Copper, Model BB-75 ..... F5-14
Hardness Tester, Rockwell F5-12
Hardness Testing of Metals 5-13
Hardness Conversion for Brass and Mild Steel 5-13e
Hardness Range for Aluminum 5-13c
Hardness Range for Copper 5-13d
Hardness Values for Clad Aluminum Sheet and Plate, and Bare Aluminum Sheet, Plate, Extrusions, and Forgings 5-13f
Rockwell Hardness Test 5-13b
Webster Hardness Tester 5-13a
Hardness Values, Rockwell, for 0.050 Inch Minimum Thickness Class Aluminum Sheet and Plate T5-20
Hardness Values, Rockwell, for Bare Aluminum Sheet, Plate, Extrusions, and Forgings T5-21
Hardness Values for Clad Aluminum Sheet and Plate, and Bare Aluminum Sheet, Plate, Extrusions, and Forgings 5-13f
Hardness 5-2i
Hat and Longeron Sections F4-21

INDEX - CONT

VOLUME 10

Subject — **Paragraph Figure, Table Number**

H - Continued

Hat Sect ion, Splice Repair of F8-37
Hatch Seal, Typical F8-60
Head Radius, Hi-Lok F7-92
Head Types (Jo-Bolts) 7-13a
Heat Treating (Soaking) Temperature T5-10
Heat Treatment 5-5
- Cold-Working 5-5c
- Hot Working 5-5b
- Types 5-5a

Heat Treatment, Curing and (of Plastics) 10-10
Heat-Treatable Rivet Identification F5-9
Heat-Treatment Methods 5-7e
Heat-Treatment Procedures 5-7g
Heating for Forming (Acrylic Plastics) 10-7b
Heavily Stressed Area, Circular Damage Repair in F8-51
Heavily Stressed Area, Damage Repair Near Adjacent Member in F8-52
Heavily Stressed Area, Insertion Skin Repair Across Stiffeners in F8-53
Heavily Stressed Areas, Damage Repair Near Existing Structure in F8-49
Heavily Stressed Areas, Rectangular Damage Repair for F8-48
Helicopter Stabilizer F4-15
Helicopters (Fuselage) 4-2a
Hex Head Jo-Bolt F7-79
Hex Head Jo-Bolts, Grip Ranges, Sizes, and Diameters of F7-84
Hi-Lok Fasteners 7-14
- Hole Preparation 7-14c
- Identification 7-14a
- Inspection 7-14f
- Installation 7-14e
- Removal 7-149
- Selection 7-14b
- Tooling 7-14d

Hi-Lok Grip Lengths F7-90
Hi-Lok Head Radius F7-92
Hi-Lok Installation F7-93
Hi-Lok Numbering System T7-32
Hi-Lok Protrusion Limits F7-94
Hi-Shear Rivet Inspection F7-64
Hi-Shear Rivet Parts F7-60
Hi-Shear Rivet Sets F7-61
Hi-Shear Rivet, Driving F7-63
Hi-Shear Rivets 7-10
- Identification 7-10a
- Inspection 7-10e
- Installation Procedures 7-10d

INDEX - CONT

VOLUME 10

Subject — **Paragraph Figure, Table Number**

H - Continued

Installation Tools 7-10c
Removal Procedures 7-10f
Selection 7-10b
Hi-Shear Rivets, Removal of F7-65
High-Temperature Setting Adhesives 9-4a
Hold-Down Plate F6-28
Hole and Drill Sizes for Self-Plugging (Friction Lock) Rivets T7-8
Hole Finder, Use of F8-10
Hole Preparation (for Hi-Lok Fasteners) 7-14c
Hole Preparation (for Jo-Bolts) 7-13e
Hole Size Limits (Olympic Blind Rivets) 7-11c
Hole Size Limits for Olympic Rivets T7-21
Hole Sizes and Countersink Diameters, Jo-Bolt T7-31
Holes, Relief F6-31
Honeycomb Core Materials 9-2d
Honeycomb Panel Edge, Repair of F9-12
Honeycomb Repair F9-2
Honeycomb Skin, Damaged F9-1
Hot Climate Precautions 10-15d
Hot Working 5-5b
Huck Lockbolts 7-12
Identification 7-12d
Inspection 7-12h
Installation Procedures 7-12g
Installation Tools 7-12f
Materials 7-12b
Removal 7-12i
Selection 7-12e
Substitution 7-12c
Types 7-12a

I

Identification and Types (of Aircraft Plastics) 10-4
Identification Marking Code (Steel) T5-2
Identification of Aluminum Alloys 5-7a
Identification of CherryMAX Rivets 7-8a
Identification of Copper Alloys 5-10a
Identification of Hi-Lok Fasteners 7-14a
Identification of Hi-Shear Rivets 7-10a
Identification of Huck Lockbolts 7-12d
Identification of Inconel 5-12a, T5-18
Identification of Jo-Bolts 7-13b
Identification of Magnesium Alloys 5-8a

INDEX - CONT

VOLUME 10

Subject — **Paragraph Figure, Table Number**

I - Continued

Identification of Monel ..... 5-11 a, T5-17
Identification of Olympic Blind Rivets ..... 7-11 a
Identification of Rivnuts 7-9a
Identification of Self-Plugging Rivets 7-7a
Identification of Steel 5-6a
Identification of Terms and Symbols (Balancing) F11-2
Identification of Titanium Alloys 5-9a
Identification, Penetrator F5-11
Inconel 5-12
  Identification 5-12a
  Methods for Working 5-12b
Inconel, Identification of T5-18
Incorrect Countersinking F7-47
Industrial Alloys 5-4b
Inner Sleeve in Steel Tube, Centering F8-68
Inner Sleeve Splice, Steel Tube F8-67
Insertion Skin Repair Across Stiffeners in Heavily Stressed Area F8-53
Inspection after Repair (of Radomes) 9-9r
Inspection of Glass Windshields 10-17a
Inspection of Hi-Lok Fasteners 7-14f
Inspection of Hi-Shear Rivets 7-10e
Inspection of Huck Lockbolts 7-12h
Inspection of Jo-Bolts 7-13h
Inspection of Olympic Blind Rivets 7-11f
Inspection of Rivets 7-5
Inspection of Self-Plugging Rivets 7-7f
Inspection, Damage 8-4
Inspection, Structural 8-3
Installation Considerations (for Transparent Plastics) 10-16a
Installation of Blind-Type Lockbolt F7-77
Installation of Dzus Fastener Receptacle F7-105
Installation of Dzus Fastener Stud and Grommet F7-106
Installation of Hi-Lok Fasteners 7-14e
Installation of Huck Lockbolts 7-12g
Installation of Jo-Bolts 7-13g
Installation of Olympic Blind Rivets 7-11e
Installation of Olympic Rivets F7-70
Installation of Pull-Type Lockbolt F7-75
Installation of Stump-Type Lockbolt F7-76
Installation of Type A-AJ Dzus Fasteners F7-100
Installation of Type F-FA-FJ Dzus Fasteners F7-101
Installation Procedure, Rivnut F7-59
Installation Procedures for Hi-Shear Rivets 7-10d
Installation Procedures for Rivnuts 7-9d

INDEX - CONT

VOLUME 10

Subject — **Paragraph Figure, Table Number**

I - Continued

Installation Procedures for Self-Plugging Rivets 7-7e
Installation Tools for Dzus Fastener (Stud, Grommet, and Receptacle) F7-104
Installation Tools for Hi-Shear Rivets 7-10c
Installation Tools for Huck Lockbolts 7-12f
Installation Tools for Rivnuts 7-9c
Installation Tools for Self-Plugging Rivets 7-7d
Installation Tools for Type A-AJ and F-FA-FJ Dzus Fasteners F7-98
Installation Tools, Rivnut F7-58
Installation Tools, Self-Plugging Rivet F7-28
Installation, Bulkhead F4-18
Installation, Hi-Lok F7-93
Installation, Self-Plugging Rivet F7-29
Insulation of Dissimilar Materials 5-7h
Internal and External Repairs 8-9
- Bulkhead Repair 8-9i
- Eliminating Gaps and Leveling Installations 8-9aa
- Floor Channel Repair 8-9o
- Former Repair 8-9h
- Longeron Repair 8-9b
- Longitudinal Skin Joint 8-9r
- Nonstressed Skin and Frame Repair 8-9q
- Patch Repair to Damaged Swage in Aileron and Flap Skin 8-9z
- Patch Repairs to Beaded Skin 8-9y
- Repair for Damaged Skin Close to a Frame 8-9x
- Repair of C rack by Stop-Drilling 8-9k
- Repair of Damaged Channels 8-9j
- Repair of Damaged Frame or Beam 8-9m
- Repair of Dents and Creases 8-91
- Repair of Heavily Stressed Support and Stiffener 8-9v
- Repair of Frame and Stringer Joint 8-9n
- Rib Repair by Insertion 8-9g
- Rib Repair by Patching 8-9f
- Rivet Spacing, Selection and Acceptability Limits for a Nonstressed Skin Patch 8-9t
- Skin and Web Repairs 8-9u
- Spar Angle Repair 8-9d
- Spar Repair by Insertion 8-9c
- Spar Web Repair 8-9e
- Splice Repair of Hat Section 8-9p
- Stressed Skin Repair 8-9w
- Stringer Repair 8-9a
- Transverse Skin Joint 8-9s

Internal Construction, Wing 4-5b, F4-11
Introduction 1-1

INDEX - CONT

VOLUME 10

Subject — **Paragraph Figure, Table Number**

J

J-Section Stringer Splice Repair F8-16
Jigs (Cementing) 10-9i
Jigs for Holding Cemented Assemblies F10-9
Jo-Bolt Basic Part Numbers F7-81
Jo-Bolt Grip Lengths F7-82
Jo-Bolt Hole Sizes and Countersink Diameters T7-31
Jo-Bolt Stem Break-Off Limits F7-87
Jo-Bolt Tooling F7-86
Jo-Bolt, Flush-Head F7-78
Jo-Bolt, Hex Head F7-79
Jo-Bolt, Millable Hex Head F7-80
Jo-Bolts 7-13
- Head Type 7-13a
- Hole Preparation 7-13e
- Identification 7-13b
- Inspection 7-13h
- Installation 7-13g
- Removal 7-13i
- Sizes 7-13c
- Tooling 7-13f
- Uses 7-13d

Joggling 6-5f
Joggling Die F6-30
Joint Allowable Loads (Pounds) Per MIL-HDKB-5 (Rivet) Criteria T7-13

K

Ketts Saw 3-5b, F3-25

L

Lacing Method F10-12
Lack-of-Material Damage, Glass Cloth Repair of F9-18
Lap or Scab Patch (Crack) F8-3
Lap or Scab (Hole) F8-4
Lap Patch Edge Distance 8-7d
Lap Patch Edge Preparation F8-6
Large Crack or Perforation, Glass Cloth Repair of F9-17
Large Single e Skin Damage 9-59
Layout (for Cutting Plastics) 10-8b
Layout of First Flange F6-7
Layout of Third Flange F6-9
Layout of Web F6-8
Layout, Repair 7-3
Leveling Installations, Eliminating Gaps and F8-59

INDEX - CONT

VOLUME 10

Subject — **Paragraph Figure, Table Number**

L - Continued

Lightening Holes 6-5h
Lightly Stressed Areas, Circular Damage Repair for F8-46
Lightly Stressed Areas, Crack Repair for F8-47
Linear Expansion 5-2e
Loads, Joint Allowable, (Pounds) Per MIL-HDBK-5 (Rivet) Criteria T7-13
Locating Brake Line in the Brake F6-11
Locating Brake or Sight Line 6-3f
Locating Brake or Sight Line of Flange F6-10
Location (of Stored Plastics) 10-5a
Lockbolt Collar Numbering System T7-25
Lockbolt, Blind-Type, Numbering System T7-24
Lockbolt, Pull-Type, Numbering System T7-22
Lockbolt, Stump-Type, Numbering System T7-23
Lockbolts, Huck 7-12
Lockbolts, Types of F7-72
Longeron and Hat Sections F4-21
Longeron and Stringer Installation F4-19
Longeron Repair 8-9b
Longitudinal Skin Joint 8-9r, F8-39
Loose Jo-Bolt, Removal of F7-89

M

Machinability 5-2j
Machine Buffing 10-14c
Machine Screw Patch F10-14
Machine Screw Repair F10-13
Machine, Bar Folding F3-31
Magnesium Alloy Facing Material 9-3c
Magnesium Alloys 5-8
  Commonly Used Alloys 5-8b
  Identification 5-8a
  Methods of Working 5-8c
Maintaining Original Contour (Airframe Sheet Metal Repair) 8-2b
Maintaining Original Strength (Airframe Sheet Metal Repair) 8-2a
Maintenance of Acrylic Plastic Enclosures on Army Aircraft 10-15
  Cleaning 10-15a
  Cold Climate Precautions 10-15e
  Hot Climate Precautions 10-15d
  Polishing 10-15b
  Waxing 10-15c
Maintenance of Engine Mounts 4-3c
Maintenance of Shop Equipment 3-2
  Major Repair 3-2b

INDEX - CONT

VOLUME 10

Subject — **Paragraph Figure, Table Number**

M - Continued

Operator Maintenance 3-2a
Storage of Tools, Equipment, and Materials 3-2c
Major Alloying Elements (for Copper) 5-10b
Major Alloying Elements T5-5
Major Repair (of Shop Equipment) 3-2b
Malleability 5-2g
Marking Code (Steel), Identification T5-2
Marking Example, Aluminum Identification F5-7
Marking Example, Steel Identification F5-6
Masking (Cementing) 10-9f
Masking (Paper) 10-6
Removal 10-6a
Replacement 10-6b
Masking Paper 10-5c
Material Substitution (of Metals) 5-7j
Material Thickness Variation (and Hi-Lok Rivets) F7-91
Material, Drilling F7-68
Material, Patch, Selection T8-5
Materials (Huck Lockbolts) 7-12b
Materials and Use (Solid Shank Rivets) 7-2a
Materials Used In Repair (of Fiber Laminate) 9-9b
Materials, Core (Sandwich Construction) 9-2
Materials, Facing 9-3
Materials, Substitute (Aluminum) T5-15
Mating Jig, Aircraft F8-1
Members, Structural 4-8
Metal and Forming Blocks F6-23
Metal Forming Machines 3-6
Bar Folding Machine 3-6a
Cornice Brake 3-6b
Shrinking and Stretching Machine 3-6d
Slip Roll Former 3-6c
Metal-Covered Wooden Floor Panels, Repair of F9-15
Metal-Covered Wooden Floor Repair 9-7
Negligible Damage 9-7a
Patching 9-7b
Metals and Alloys 5-4
Alloying 5-4a
Industrial Alloys 54b
Preparing Alloys 5-4c
Metals, Hardness Testing of 5-13
Metals, Properties of 5-2
Method, Calculation (of Balancing) F11-8
Method, Lacing F10-12

INDEX - CONT

VOLUME 10

Subject — **Paragraph Figure, Table Number**

M - Continued

Method, Scale (of Balancing) F11-9
Method, Soak F10-6
Methods (of Rebalancing) 11-4b
Methods for Working (of Inconel) 5-12b
Methods for Working and Uses (of Monel) ..... 5-11 b
Methods of Working (Magnesium Alloys) 5-8c
Methods of Working (Titanium Alloys) 5-9c
Micrometer F3-5
Micrometers 3-4a
Microshaver F7-14
Military Specification Number (of Plastics) 104a
Millable Hex Head Jo-Bolts, Grip Ranges, Sizes, and Diameters of F7-85
Millable Hex Head Jo-Bolt F7-80
Minimizing Weight (Airframe Sheet Metal Repair) 8-2c
Minimum Annealing Time for Acrylic Plastic T10-4
Minimum Rivet Edge Distances T8-1
Minimum Rivet Shear and Tensile Strength (Pounds) in Steel Coupons T7-12
Missing Core 9-5b
Modern Use (Sandwich Construction) 9-1c
Moisture and Contamination, Preventing F9-28
Monel 5-11
  Identification ..... 5-1 a
  Methods for Working and Using ..... 5-11 b
Monel, Identification of T5-17
Monocoque Construction F4-1
Monospar Wing Construction F4-8
Mount, Engine F4-6
Mounts, Engine 4-3
MS 20600 Protruding-Head Rivet Identification F7-26
MS 20601 Countersunk-Head Rivet Identification F7-27
Multispar Wing Construction F4-9

N

Nacelle Structure F4-7
Nacelles 4-4
Natural Core Materials 9-2a
Nearest Corresponding Numbers, Specifications, Cross Reference of (Steel) T5-4
Negligible Damage (of Metal-Covered Wooden Floor) 9-7a
Negligible Damage (to Airframe Sheet Metal) 8-5a
Neutral Axis and Stresses Resulting from Bending F6-2
Nicks and Dents (in Plastics) 10-12a
Nominal Diameter, Countersunk Head, CherryMAX Rivet F7-32
Nominal Diameter, Protruding Head, CherryMAX Rivet F7-33

INDEX - CONT

VOLUME 10

Subject — **Paragraph Figure, Table Number**

N - Continued

Non-Destructive Inspection 8-3f
Non-Powered Metal Cutting Machines 3-3
Rotary Punch 3-3d
Scroll Shears 3-3b
Squaring Shears 3-3a
Throatless Shears 3-3c
Nonstressed Frame Repair F8-33
Nonstressed Skin and Frame Repair 8-9q, F8-38
Nose Rib Repair F8-22
Nose Rib Using Beads, Crimps, Relief Holes, and Riveted Angles F6-22
Nose Rib with Crimps and Beads F6-21
Nose Rib with Relief Holes F6-20
Nose Rib, Plain F6-19
Numbering System, Hi-Lok T7-32

O

Old and New Color Code (for Aluminum), Cross Reference of T5-8
Old Color Code (Steel) Cross Reference T5-3
Olympic Blind Rivets 7-11
Drilling ..... 7-11 d
Grip Range ..... 7-11 b
Hole Size Limits ..... 7-1 c
Identification ..... 7-11 a
Inspection ..... 7-11 f
Installation 7-11e
Removal ..... 7-11 g
Olympic Rivet Grip Length F7-67
Olympic Rivet Material Codes T7-18
Olympic Rivet Part Number Cross Reference T7-19
Olympic Rivet Pulling Head Operation F7-69
Olympic Rivet Stem Styles F7-66
Olympic Rivet, Removing F7-71
Olympic Rivets, Grip Range for T7-20
Olympic Rivets, Hole Size Limits for T7-21
Olympic Rivets, Installation of F7-70
Open and Closed Skin Area Repair 8-7b
Operations, Forming 6-4
Operator Maintenance, (Sheet Metal) Shop Equipment 3-2a
Optical Quality (of Aircraft Plastics) 10-3
Outer Sleeve Splice, Steel Tube Using F8-69
Oven Temperature for Acrylic Plastics T10-1
Overlay Patch to Reinforce a Crack F10-16
Oversize Diameter, Countersunk Head, CherryMAX Rivet F7-34

INDEX - CONT

VOLUME 10

Subject — **Paragraph Figure, Table Number**

O - Continued

Oversize Diameter, Protruding Head, CherryMAX Rivet F7-35

P

Pan Void, Repair of F9-7
Panel Repair, Bonded Magnesium F9-3
Part Number Breakdown, CherryMAX T7-10
Part Number Cross Reference, Olympic Rivet T7-19
Parting Films and Compounds 9-9f
Parts Repair, Spotwelded 12-6
Patch Material Selection T8-5
Patch Repairs to Beaded Skin 8-9y, F8-57
Patch Repair to Damaged Swage In Aileron and Flap Skin 8-9z, F8-58
Plywood Facing Material 9-3d
Patch, Flush F8-5
Patch, Flush, Repair Procedure F8-7
Patch, Machine Screw F10-14
Patch, Overlay, to Reinforce a Crack F10-16
Patches 8-7a
Patching (of Metal-Covered Wooden Floor) 9-7b
Patching Procedures (for Metal-Covered Wooden Floors) 8-7c
Patching Procedures (for Acrylic Plastics) 10-13
Alternate Transparent Plastic Plug Repair 10-13b
Transparent Overlay Plastic Patch 10-13c
Transparent Plastic Plug Repair 10-13a
Peening with Hammers F7-110
Penetrator Identification F5-11
Pin Punch F3-20
Piston-Engine Mounts 4-3a
Plain Nose Rib F6-19
Plastic Joint, Cemented F10-4
Plastics, Forming of 10-7
Plate, Hold-Down F6-28
Pliers and Strip Extractor F7-111
Pliers, Clamp F3-9
Pliers, Cleco Fasteners F3-8
Plies and Core, Replaced F9-23
Pneumatic Rivet Gun Structure F7-12
Pneumatic Rivet Gun, Riveting Procedures Using a F7-19
Pneumatic Rivet Guns F7-11
Polishing (of Acrylic Plastics) 10-14d, 10-15b
Portable Power Drills F3-28
Position (of Stored Plastics) 10-5b
Power Drills, Portable F3-28

INDEX - CONT

VOLUME 10

Subject — **Paragraph Figure, Table Number**

P - Continued

Power Tools (for Riveting) 7-4b
Powered Metal Cutting Machines 3-5
- Band Saw 3-5d
- Drills and Drill Presses 3-5e
- Grinding and Sanding Machines 3-5f
- Ketts Saw 3-5b
- Reciprocating Saw 3-5c
- Safety 3-5a

Practices, Countersinking F7-18
Precipitation (Aging) Treating Temperatures, Times, and Condition T5-9
Preparing Alloys 5-4c
Preparing Materials for Spotwelding 12-6d
Press, Drill F3-29
Preventing Moisture and Contamination F9-28
Prick Punch F3-16
Primary Horizontal Member in Heavily Stressed Area, Damage Repair Near F8-50
Principles, Balancing 11-3
Procedure for Edge Band Sealing 9-9q
Procedure for Obtaining Void-Free Laminate 9-9p
Procedure for Preventing Moisture and Oil Contamination 9-90
Procedures, Bonding 10-11
Procedures, Cementing 10-9
Procedures, Finishing 10-14
Procedures, Patching 10-13
Properties of Metals 5-2
- Abrasion Resistance 5-21
- Compressive Strength 5-2c
- Conductivity 5-2m
- Corrosion Resistance 5-2k
- Ductility 5-2f
- Elasticity 5-2d
- Hardness 5-2i
- Linear Expansion 5-2e
- Machinability 5-2j
- Malleability 5-2g
- Shear Strength 5-2b
- Specific Gravity 5-2n
- Tensile Strength 5-2a
- Toughness 5-2h

Protective Coatings 8-3e
Protruding Head Nominal Diameter CherryMAX Rivet F7-33
Protruding Head Oversize Diameter CherryMAX Rivet F7-35
Protruding Head Rivets, Removal of 7-6a, F7-23
Protrusion Limits, Hi-Lok F7-94

INDEX - CONT

VOLUME 10

Subject — **Paragraph Figure, Table Number**

P - Continued

Pull- and Blind-Type Aluminum Lockbolt Rivet Gun F7-73
Pull- and Blind-Type Steel Lockbolt Rivet Gun F7-74
Pull- and Stump-Type Lockbolts, Drilling Procedures for T7-29
Pull- and Stump-Type Lockbolts, Grip Range for T7-26
Pull-Type Lockbolt Numbering System T7-22
Pull-Type Lockbolt, Installation of F7-75
Punch, Center F3-17
Punch, Drive F3-19
Punch, Pin F3-20
Punch, Prick F3-16
Punch, Rotary F3-4
Punch, Transfer F3-21
Punches 3-4j
Purposes (of Manual) 1-1

Q

Quality Assurance for Repair (of Sandwich Construction) 9-6q
Quality, Optical (of Aircraft Plastics) 10-3
Quency Delay, Recommended Maximum, Wrought Alloys (for Immersion Type Quenching) T5-13

R

Radii of Cuts (of Plastic), Various, Bandsaw Widths for T10-3
Radius Gauge 3-4b, F3-6
Radius of Bend 6-3a
Range, Grip (CherryMAX Rivets) T7-11
Reaming, Dimpling and F7-48
Rebalancing Movable Surfaces, General 11-1
Reciprocating Saw 3-5c, F3-26
Recommended Bucking Bar Weights T7-6
Recommended Countersinks for Shaving T7-16
Recommended Installation Procedures for Transparent Plastics 10-16
  Bolt and Rivet Mounting 10-16c
  Expansion and Contraction Allowances 10-16b
  Installation Considerations 10-16a
Recommended Maximum Quench Delay, Wrought Alloys (for Immersion Type Quenching) T5-13
Rectangular Damage Cutout Repair (Lightly Stressed) F8-44
Rectangular Damage Repair for Heavily Stressed Areas F848
Reheat Treatment of Alclad Alloys T5-12
Reinforced Shell Construction F4-3
Reinforcing a Dent at a Steel Tube Cluster Joint F8-65
Relief Holes 6-59, F6-31
Relief Holes, Nose Rib with F6-20

INDEX - CONT

VOLUME 10

Subject — **Paragraph Figure, Table Number**

R - Continued

Removal (of Hi-Lok Fasteners) 7-14g
Removal (of Huck Lockbolts) 7-12i
Removal (of Jo-Bolts) 7-13i
Removal (of Masking) 10-6a
Removal (of Olympic Blind Rivets) 7-11g
Removal and Installation (of Glass Windshields) 10-17c
Removal of Countersunk Head Rivet F7-24
Removal of Damaged Face Plies by Scarf Method F9-25
Removal of Hi-Shear Rivets F7-65
Removal of Loose Jo-Bolt F7-89
Removal of Protruding Head Rivets F7-23
Removal of Rivets 7-6
Removal of Self-Plugging Rivets F7-30
Removal of Tightly Installed Jo-Bolt F7-88
Removal Procedures (Hi-Shear Rivets) 7-10f
Removal Procedures (Rivnuts) 7-9e
Removal Procedures (Self-Locking Rivets) 7-7g
Removal, CherryMAX F7-55
Removing Damaged Face Plies Using Step Joint Method F9-22
Removing Olympic Rivet F7-71
Repair by Insertion, Stringer, When Damage Affects More than One Stringer F8-15
Repair by Insertion, Stringer, When Damage Affects Only One Stringer F8-14
Repair by insertion, Stringer, When Damage Exceeds Two Thirds of One Leg in Width F8-13
Repair by Patching, Stringer F8-12
Repair for Damaged Skin Close to a Frame 8-9x, F8-56
Repair for Heavily Stressed Support and Stiffener F8-54
Repair for Short Edge Distance and Broken Spotwelds F12-7
Repair Layout 7-3
- Rivet Selection 7-3a
- Rivet Spacing 7-3c
- Rivet Strength 7-3b
- Rivet Substitutions 7-3d

Repair Material Selection 8-6d
Repair Methods for Specified Defects (of Plastics) 10-12
- Cracks 10-12d
- Crazing 10-12c
- Delamination and Discoloration 10-12e
- Nicks and Dents 10-12a
- Scratches 10-12b

Repair of Cracks by Stop-Drilling 8-9k, F8-31
Repair of Damage Near Existing Structure (Lightly Stressed) F8-45
Repair of Damaged Channels 8-9j
Repair of Damaged Frame or Beam 8-9m
Repair of Defective Spotwelds Exceeding Allowable Percentage 12-6c

INDEX - CONT

VOLUME 10

Subject — **Paragraph Figure, Table Number**

R - Continued

Repair of Dents 9-6i
Repair of Dents and Creases 8-91, F8-32
Repair of Double-Skin Damage 9-6m
Repair of Frame and Stringer Joint 8-9n, F8-35
Repair of Heavily Stressed Support and Stiffener 8-9v
Repair of Honeycomb Panel Edge F9-12
Repair of Honeycomb Panel Edges 9-60
Repair of Impregnated Glass Cloth Parts 9-8
Repair of Large, Single-Skin Damage 9-61
Repair of Metal-Covered Wooden Floor Panels F9-15
  Classification of Damage 9-8a
  Damage Repair 9-8b
Repair of Missing Core 9-6f
Repair of Pan Void F9-7
Repair of Pre-Drilled Attachment Holes 9-9n
Repair of Sandwich Construction 9-6
  Bonded Former Assemblies 9-6p
  Bonded Magnesium Panels 9-6d
  Bonded Stiffeners 9-6c
  Cleanliness of Repair Area 9-6a
  Quality Assurance for Repair 9-6q
  Repair of Dents 9-6i
  Repair of Double-Skin Damage 9-6m
  Repair of Honeycomb Panel Edges 9-60
  Repair of Large, Single-Skin Damage 9-61
  Repair of Missing Core 9-6f
  Repair of Scotchply Edge Member and Corfil Edge Filler Damage 9-6n
  Repair of Skin Core Voids 9-6g
  Repair of Skin Doubler Voids 9-6h
  Repair of Skin Panels 9-6e
  Repair of Small, Single-Skin Damage 9-6j
  Repair of Small, Single-Skin Holes 9-5f
  Sample Honeycomb Repair 9-6b
Repair of Scotchply Edge Member and Corfil Edge Filler Damage 9-6n
Repair of Sharp Dent or Crack in Length of Steel Tubing F8-66
Repair of Skin Core Doubler Voids 9-6h
Repair of Skin Core Voids 9-6g, F9-6
Repair of Skin Panels 9-6e
Repair of Small, Single-Skin Damage 9-6j
Repair of Small, Single-Skin Holes 9-6k
Repair Parts Layout 8-6e
Repair Practices, General 8-6
Repair Procedures (for Radome Repair) 9-9h
Repair, Channel, by Insertion F8-30

INDEX - CONT

VOLUME 10

Subject — **Paragraph Figure, Table Number**

R - Continued

Repair, Channel, by Patching F8-29
Repair, Floor Channel F8-36
Repair, Former F8-25
Repair, Honeycomb F9-2
Repair, Machine Screw F10-13
Repair, Nonstressed Frame F8-33
Repair, Nose Rib F8-22
Repair, Rib, by Insertion F8-24
Repair, Spar Angle F8-20
Repair, Spar, by Insertion F8-19
Repair, Stressed Beam F8-34
Repair, Trailing Edge F9-4
Repair, Tubing 8-11
Repair, Wing Rib F8-23
Repairing Aluminum Alloy Parts, Rivet Selection and Spacing When T8-2
Repairing Corrosion-Resistant Steel Parts, Rivet Selection and Spacing When T8-3
Repairing Magnesium Alloy Parts, Rivet Selection and Spacing When T8-4
Repairs for Cracks in Radius of Stringer End, Typical F8-18
Replaced Plies and Core F9-23
Replacement (of Masking) 10-6b
Replacement and Repair, Skin F8-8
Replacing Face Plies F9-24
Requirements (for Rebalancing) ..... 11 -4a
Resin-Impregnated Glass Cloth Facing Material 9-3e
Resins, Adhesives and 9-4
Responsibility for Shop Rules (Sheet Metal Shop) 2-1a
Retainer, Seal F8-61
Rib Construction F4-13
Rib Repair by Insertion 8-9g, F8-24
Rib Repair by Patching 8-9f
Right and Wrong Methods of Horizontal Stacking of Small (Plastic) Sheets F10-1
Rivet Acceptability Limits F7-22
Rivet Edge Distance F7-4
Rivet Edge Distances, Minimum T8-1
Rivet Failure 7-5b
Rivet Grip Length, Olympic F7-67
Rivet Gun, Pneumatic, Structure F7-12
Rivet Guns, Pneumatic F7-11
Rivet Head Cracking F7-21
Rivet Head Markings, Solid Shank F7-2
Rivet Heat-Treating 7-2c
Rivet Identification 7-2b
Rivet Identification, MS 20600 Protruding-Head F7-26
Rivet Identification, MS 20601 Countersunk-Head F7-27

INDEX - CONT

VOLUME 10

Subject — **Paragraph Figure, Table Number**

R - Continued

Rivet Inspection 7-5
Correctly and Incorrectly Driven Rivets 7-5a
Rivet Failure 7-5b
Rivet Inspection Procedures 7-5c
Rivet Inspection Procedures 7-5c
Rivet Inspection, Hi-Shear F7-64
Rivet Installation 7-4
Hand Tools 7-4a
Power Tools 7-4b
Riveting Procedure 7-4c
Rivet Length, Factors in Determining F7-3
Rivet Material Codes, Olympic T7-18
Rivet Parts, Hi-Shear F7-60
Rivet Pulling Head Operation, Olympic F7-69
Rivet Removal 7-6
Countersunk-Head Rivet Removal 7-6b
Protruding-Head Rivet Removal 7-6a
Rivet Selection 73a, 8-6f
Rivet Selection and Spacing When Repairing Aluminum Alloy Parts T8-2
Rivet Selection and Spacing When Repairing Corrosion-Resistant T8-3
Rivet Selection and Spacing When Repairing Magnesium Alloy Parts T8-4
Rivet Sets, Hi-Shear F7-61
Rivet Shaving, CherryMAX F7-51
Rivet Shear, Minimum, and Tensile Strength (Pounds) in Steel Coupons T7-12
Rivet Spacing 7-3c, F7-5
Rivet Spacing and Edge Distance 8-6g
Rivet Spacing for Repair Using Formed Patch F8-43
Rivet Spacing for Repair with Double Row of Rivets F8-42
Rivet Spacing for Repair with Single Row of Rivets F8-41
Rivet Spacing, Selection and Acceptability Limits for a Nonstressed Skin Patch 8-9t
Rivet Squeezers F7-13
Rivet Stem Styles, Olympic F7-66
Rivet Strength 7-3b
Rivet Styles and Materials, Solid Shank F7-1
Rivet, CherryMAX F7-31
Rivet, Heat-Treatable, Identification of F5-9
Riveting 8-6i
Riveting Procedure 7-4c
Riveting Procedures Using a Pneumatic Rivet Gun F7-19
Rivets and Riveting Techniques, General 7-1
Rivets Substitutions 7-3d
Rivets, CherryMAX 7-8
Rivets, Correctly and Incorrectly Driven F7-20
Rivets, Hi-Shear 7-10

INDEX - CONT

VOLUME 10

Subject — **Paragraph Figure, Table Number**

R - Continued

Rivets, Olympic Blind 7-11
Rivets, Solid Shank 7-2
Rivnut Grip Length, Determining F7-57
Rivnut Installation Procedure F7-59
Rivnut Installation Tools F7-58
Rivnuts 7-9, F7-56
- Identification 7-9a
- Installation Procedures 79d
- Installation Tools 79c
- Removal Procedures 7-9e
- Selection 7-9b

Rockwell Hardness Scales, Standard T5-19
Rockwell Hardness Test 5-13b
Rockwell Hardness Tester F5-12
Rockwell Hardness Values for 0.050 Inch Minimum Thickness Clad Aluminum Sheet and Plate T5-20
Rockwell Hardness Values for Bare Aluminum Sheet, Plate, Extrusions, and Forgings T5-21
Room Temperature Setting Adhesives 9-4c
Rotary Punch 3-3d, F3-4
Router Cutter, Typical F10-2
Routers 10-8d

S

SAE Numbers, Steel T5-1
Safety of Powered Metal Cutting Machines 3-5
Sample Channel F6-6
Sample Honeycomb Repair 9-6b
Sandbag F3-24
Sandbag Bumping F6-29
Sanding (Plastics) 10-14a
Sanding Deep Scratches F10-11
Sandwich Construction Repair, General 9-1
- Construction 9-1a
- Design ..... 9-1 b
- Modern Use 9-1c

Sandwich Construction, Repair of 9-6
Saw, Ketts F3-25
Saw, Reciprocating F3-26
Saws (Used to Cut Plastics) 10-8c
Scab or Lap Patch (Crack) F8-3
Scab or Lap Patch (Hole) F8-4
Scale Method (of Balancing) F11-9
Scope (of Manual) 1-2
Scotchply Edge Member and Corfil Edge Filler Damage 9-5i

INDEX - CONT

VOLUME 10

Subject — **Paragraph Figure, Table Number**

S - Continued

Scratch or Crack Repair F9-5
Scratches (in Plastics) 10-12b
Scribing and Edge Sanding 10-8e
Scroll Shears 3-3b, F3-2
Seal Retainer 8-61
Sealant Defects 8-10c
Sealant Repair or Replacement 8-10d
Sealing of Hardware 8-10e
Sealing, Structural 8-10
Secondary Procedures, Dzus Fastener Installation F7-103
Selection of CherryMAX Rivets 7-8b
Selection of Hi-Lok Fasteners 7-14b
Selection of Hi-Shear Rivets 7-10b
Selection of Huck Lockbolts 7-12e
Selection of Rivnuts. 7-9b
Self-Plugging Rivet Installation F7-29
Self-Plugging Rivet Installation Tools F7-28
Self-Plugging Rivet Selection 7-7c
Self-Plugging Rivet Stem Features F7-25
Self-Plugging Rivets (Friction Lock) 7-7
  Identification 7-7a
  Inspection 7-7f
  Installation Procedures 7-7e
  Installation Tools 7-7d
  Removal Procedures 7-7g
  Self-Plugging Rivet Selection 7-7c
  Substitution for Common Rivets 7-7b
Self-Plugging Rivets, Removal of F7-30
Semi-Monocoque Construction F4-2
Setback 6-3c, F64
Setback - K - Chart T6-2
Shaping Aircraft Metals 6-2
  Chem-Milling 6-2b
  Forming 6-2a
Shear 5-3d, F5-4
Shear Strength 5-2b
Shear, Hand F3-10
Shear, Scroll F3-2
Shearing Spotwelds 12-3
Shears, Bench F3-11
Shears, Squaring F3-1
Shears, Throatless F3-3
Sheet and Plate, Rockwell T5-20
Sheet Metal Holders 3-4c

INDEX - CONT

VOLUME 10

Subject — **Paragraph Figure, Table Number**

S - Continued

Sheet Metal, Bending 6-3
Sheet Substitution, Aluminum Alloy T5-14
Shell, Reinforced, Construction F4-3
Shop Equipment (Sheet Metal Shop) 2-2
Shop Housekeeping (Sheet Metal Shop) 2-1b
Shop Rules, General (Sheet Metal Shop) 2-1
Shop Safety (Sheet Metal Shop) ..... 2-1 e, 2-1c
Shop Tools and Materials (Sheet Metal Shop) 2-1d
Shop Working Practice (Aluminum Alloys) 5-7c
Shrinking 6-4c, F6-14
Shrinking and Stretching Machine 3-6d, F3-34
Shrinking by V-Block Method F6-15
Shrinking, Forming a Flanged Angle by F6-16
Sight Line, Brake or F6-5
Single Row of Rivets, Rivet Spacing for Repair with F841
Single Shear Strength of Aluminum Alloy Rivets T7-2
Sizes (of Jo-Bolts) 7-13c
Sizes of Twist Drills with Decimal Equivalents T7-5
Skin and Bulkhead Repair F8-28
Skin and Frame Repair F8-27
Skin and Web Repairs 8-9u
Skin Core Voids 9-5c
Skin Core Voids, Repair of F9-6
Skin Cracks 8-3d
Skin Cutout Patching Using Spotwelds 12-6f
Skin Cutout Repair Near Stiffener Using Spotwelds 12-6g
Skin Doubler Void Repair (0.255 Inch or Greater) F9-8
Skin Doubler Void Repair (Less Than 0.255 Inch) F9-9
Skin Doubler Voids 9-5d
Skin Joint, Longitudinal F8-39
Skin Joint, Transverse F8-40
Skin Patch, Nonstressed, Rivet Spacing, and Acceptability Limits for 8-9t
Skin Repair, Chem-Milled F8-2
Skin Repair, Double (Flush) F9-10
Skin Repair, Double (Nonflush) F9-11
Skin Repair, Stressed 8-7
Skin Replacement 8-8a
Skin Replacement and Repair 8-8
  Circular External Repair 8-8b
  Skin Replacement 8-8a
  Temporary Patch Repairs 8-8c
Skin Wrinkles 8-3c
Skin, Damaged, Close to a Frame, Repair for F8-56
Skin, Stressed, Repair F8-55

INDEX - CONT

VOLUME 10

Subject — **Paragraph Figure, Table Number**

S - Continued

Sleeve Stretch Marks, CherryMAX F7-54
Slip Roll Former 3-6c, F3-33
Small Crack, Glass Cloth Repair of F9-16
Small Single Skin Damage 9-5f
Snips, Aviation F3-12
Snips, Circle F3-14
Snips, Straight F3-13
Soak Method 10-9b, F10-6
Soaking 10-9g
Soaking (Heat Treating) Temperature T5-10
Soaking Time for Solution Treatment of Cast Alloys T5-11
Solid Shank Rivet Head Markings F7-2
Solid Shank Rivet Styles and Materials F7-1
Solid Shank Rivets 7-2
  Materials and Use 7-2a
  Rivet Heat-Treating 7-2c
  Rivet Identification 7-2b
Solid Shank Rivets, Grip Lengths for T7-1
Solution Treatment of Cast Alloys, Soaking Time for T5-11
Spacing, and Rivet Selection, When Repairing Corrosion-Resistant Steel Parts T8-3
Spacing, Rivet F7-5
Spar Angle Repair 8-9d, F8-20
Spar Construction F4-12
Spar Repair by Insertion 8-9c, F8-19
Spar Web Repair 8-9e, F8-21
Specific Gravity 5-2n
Specifications, Cross Reference of Nearest Corresponding Numbers (Steel) T5-4
Specified Defects (of Plastics), Repair Methods for 10-12
Splice Repair of Hat Section 8-9p, F8-37
Spotfacing F7-62
Spotweld Failure 12-4
Spotweld Failure with No Skin Breaks 12-5
Spotweld Repair to Crack in Stiffener 12-6i
Spotweld Repair to Stiffener 12-6h
Spotwelded Parts Repair 12-6
  Acceptable Percentage of Defective Spotwelds 12-6b
  Acceptable Spotweld Spacing 12-6a
  Preparing Materials for Spotwelding 12-6d
  Repair for Short Edge Distance and Broken Spotwelds 12-6e
  Repair of Defective Spotwelds Exceeding Allowable Percentage 12-6c
  Skin Cutout Patching Using Spotwelds 12-6f
  Skin Cutout Repair Near Stiffener Using Spotwelds 12-6g
  Spotweld Repair to Crack in Stiffener 12-6i
  Spotweld Repair to Hole in Stiffener 12-6h

INDEX- CONT

VOLUME 10

Subject — **Paragraph Figure, Table Number**

S - Continued

Spotwelds, Drilling 12-2
Spotwelds, General 12-1
Spotwelds, Shearing 12-3
Spring Installation, Standard F7-99
Squaring Shears 3-3a, F3-1
Squeezers, Rivet F7-13
Stabilizer, Helicopter F4-15
Stacking, Horizontal, of Small (Plastic) Sheets, Right and Wrong Methods of F10-1
Stainless Steel, Drill Angle for F6-1
Standard Countersink F7-7
Standard Rockwell Hardness Scales T5-19
Standard Spring Installation F7-99
Standard Tools for Stump-Type Lockbolts T7-28
Static Balance 11-2a
Static Balance, Control Surface Fl1-1
Steel 5-6
  Alloying Materials 5-6b
  Identification of Steels 5-6a
  Types of Steels and Their Uses 5-6c
Steel Facing Material 9-3b
Steel Identification Marking Example F5-6
Steel Lockbolt Rivet Gun, Pull- and Blind-Type F7-74
Steel SAE Numbers T5-1
Steel Tube Fishmouth Splice Using Large Diameter Replacement Tube F8-70
Steel Tube Inner Sleeve Splice F8-67
Steel Tube Using Outer Sleeve Splice F8-69
Steel Tubing Distortion, Correcting Oval Shaped F8-63
Stem and Collar Flushness, CherryMAX F7-52
Stem Break-Off Limits, Jo-Bolt F7-87
Stem Catcher Bag 670A20 ..... F7-44
Stem Features, Self-Plugging Rivet F7-25
Step Joint Method, Removing Damaged Face Plies Using F9-22
Stop Countersink F7-8
Stop-Drilling, Repair of Cracks by F8-31
Storage (of Adhesives and Resins) 9-4d
Storage and Handling (of Plastics) 10-5
  Formed Sections 10-5d
  Location 10-5a
  Masking Paper 10-5c
  Position 10-5b
Storage of Tools, Equipment, and Materials 3-2c
Straight Line Bends 6-5a
Straight Snips 3-4g, F3-13
Straightening Bowed Steel Tubes F8-64

INDEX - CONT

VOLUME 10

Subject — **Paragraph Figure, Table Number**

S - Continued

Strength, Bearing (Pounds) ... T7-3
Stress and Strain Forces ... 5-3
- Bending ... 5-3e
- Compression ... 5-3b
- Shear ... 5-3d
- Tension ... 5-3a
- Torsion ... 5-3c

Stressed Beam Repair ... F8-34
Stressed Skin Repair ... 8-7, 8-9w, F8-55
- Flush Access Door ... 8-7d
- Open and Closed Skin Area Repair ... 8-7b
- Patches ... 8-7a
- Patching Procedures ... 8-7c

Stresses Resulting from Bending, Neutral Axis and ... F6-2
Stretching ... 6-4d, F6-13
Stretching Machine, Shrinking and ... F3-34
Stretching, Forming a Flanged Angle by ... F6-18
String Repair by Insertion When Damage Affects Only One Stringer ... F8-14
Stringer and Longeron Installation ... F4-19
Stringer Cross-Section, Typical ... F4-20
Stringer Repair ... 8-9a
Stringer Repair by Insertion When Damage Affects More than One Stringer ... F8-15
Stringer Repair by Insertion When Damage Exceeds Two Thirds of One Leg in Width ... F8-13
Stringer Repair by Patching ... F8-12
Stringer Repair with Formed Angle ... F8-17
Stringer Splice Repair, J-Section ... F8-16
Stringers and Longerons ... 4-8b
Strip Extractor, Pliers and ... F7-111
Structural Inspection ... 8-3
- Corrosion ... 8-3a
- Non-Destructive Inspection ... 8-3f
- Protective Coatings ... 8-3e
- Skin Cracks ... 8-3d
- Skin Wrinkles ... 8-3c
- Surface Indications ... 8-3b

Structural Members ... 4-8
- Bulkheads, Frames, and Formers ... 4-8a
- Stringers and Longerons ... 4-8b

Structural Metals, General ... 5-1
Structural Parts, Airplane ... F4-5
Structural Sealing ... 8-10
- Sealant Defects ... 8-10c
- Sealant Repair or Replacement ... 8-10d
- Sealing of Hardware ... 8-10e

INDEX - CONT

VOLUME 10

Subject — **Paragraph Figure, Table Number**

S - Continued

Types of Seals 8-10a
Wires and Tubes 8-10b
Structural Support During Repair 8-6a
Structural Tubing ..... 8-11 b
Structural Tubing, Example of F8-62
Structure, Nacelle F4-7
Stud, Camlock, Installation F7-112
Stump-Type Lockbolt Numbering System T7-23
Stump-Type Lockbolt, Installation of F7-76
Stump-Type Lockbolts, Standard Tools for T7-28
Substitute Materials (Aluminum) T5-15
Substitution (by Huck Lockbolts) 7-12c
Substitution (of Self-Plugging Rivets) for Common Rivets 7-7b
Support and Stiffener, Heavily Stressed, Repair for F8-54
Supporting Ring, Use of F7-108
Surface Balance Considerations 11-2
Addition of Weights 11-4c
Methods 11-4b
Requirements 11-4a
Surface Indications 8-3b
Surface Rebalancing Procedures 11-4
Dynamic Balance 11-2b
Static Balance 11-2a
Terms and Symbols 11-2c

T

Tail Cone and Cabin Sections F4-4
Techniques, Cutting (for Plastics) 10-8
Temperature (for Heat Treatment of Plastics) 10-10a
Template, Hand Router, for Milling Plug Cavity F10-15
Temporary Patch Repairs ..... 8-&
Tensile Strength 5-2a
Tension 5-3a, F5-1
Terms and Symbols (Balancing) 11-2c
Terms and Symbols (Balancing), Identification of Fll11-2
Thickness Variation, Material (and Hi-Lok Rivets) F7-91
Thickness, Cushion F10-8
Throatless Shears 3-3c, F3-5
Tightly Installed Jo-Bolt, Removal of F7-88
Titanium and Titanium Alloys 5-9
Characteristics 5-9b
Identification 5-9a
Methods of Working 5-9c

INDEX - CONT

VOLUME 10

Subject — **Paragraph Figure, Table Number**

T - Continued

Tolerance (for Repairs) 8-6j
Tool Capacity Chart (for Rivets) T7-14
Tooling (for Hi-Lok Fasteners) 7-15
Tooling (for Jo-Bolts) 7-13f
Tooling, Jo-Bolt F7-86
Torsion 5-3c, F5-3
Toughness 5-2h
Trailing Edge Repair F9-4
Transfer Punch F3-21
Transfer Punch, Use of F8-9
Transparent Overlay Plastic Patch 10-13c
Transparent Plastic Plug Repair 10-13a
Transparent Plastics, Recommended Installation Procedures for 10-16
Transverse Skin Joint 8-9s, F840
Treatment, Heat 5-5
Troubleshooting, CherryMAX T7-17
Tubing Repair 8-11
  Engine Mount ..... 8-11 a
  Structural Tubing ..... 8-11 b
Turbine-Engine Mounts 4-3b
Turn-Lock Fasteners 7-15
  Camlock Fasteners 7-15b
  Dzus Fasteners 7-15a
Twist Drills with Decimal Equivalents, Sizes of T7-5
Type of Cement 10-9a
Types and Identification (of Aircraft Plastics) 1-4
  Burning 10-4b
  Chemical Reaction 10-4e
  Flexing 10-4d
  Military Specification Number 10-4a
  Visual Inspection 10-4c
Types of Circular Saw Blades for Cutting Acrylic Plastic Sheets T10-2
Types of Design (Wing) 4-5a
Types of Heat Treatment 5-5a
Types of Lockbolts F7-72
Types of Seals 8-10a
Types of Steel and Their Uses 5-6c
Typical Bolt Installation (in Transparent Plastic) F10-17
Typical CherryMAX Blind Heads F7-53
Typical Edge Band Sealing F9-29
Typical Hatch Seal F8-60
Typical Repairs for Cracks in Radius of Stringer End F8-18
Typical Router Cutter F10-2
Typical Scarf Method for Class II Repair (of Radomes) F9-26

INDEX - CONT

VOLUME 10

Subject — **Paragraph Figure, Table Number**

T - Continued

Typical Sighting Dome Edge Attachment F10-20
Typical Stringer Cross Sections..... F4-20

U

Unbalanced and Balanced Conditions..... Fl11-4
Unbonding and Ply Separation..... 9-5j
Use of Camlock Punch..... F7-109
Use of Hole Finder F8-10
Use of Supporting Ring F7-108
Use of Transfer Punch F8-9
Use of 269C3 Cherry Grip Gauge..... F7-36
Uses (of Jo-Bolts)..... 7-13d

V

V-Block F3-22
Various Diameter Rivets, Drill Sizes for..... T7-4
Visual Inspection (of Plastics)..... 10-4c
Void Repair, Skin Doubler (Less Than 0.255 Inch)..... F9-9
Void Repair, Skin Doubler (0.255 Inch or Greater)..... .F9-8

W

Waxing 10-15c
Web Repair, Spar F8-21
Webster Hardness Tester..... 5-13a
Weight and Distance, Effects of F11-3
Windshields, Glass..... 10-17
Wing Construction, Box Beam F4-10
Wing Construction, Monospar F4-8
Wing Construction, Multispar F4-9
Wing Internal Construction F4-11
Wing Rib Repair..... F8-23
Wing-Type Dzus Fastener Installation..... F-102
Wings 4-5
    Internal Construction..... 4-5b
    Types of Design..... 4-5a
Wires and Tubes..... 8-10b

By Order of the Secretary of the Army

GORDON R. SULLIVAN
General, United States Army
Chief of Staff

Official:

MILTON H. HAMILTON
Administrative Assistant to the
Secretary of the Army
02510

DISTRIBUTION:
To be distributed in accordance with DA Form 12-31-E, block no 3226, requirements for TM 1-1500-204-23-1.

* U.S. GOVERNMENT PRINTING OFFICE : 1995 0 - 388-421 (042214)

These are the instructions for sending an electronic 2028

The following format must be used if submitting an electronic 2028. The subject line must be exactly the same and all fields must be included; however only the following fields are mandatory: 1, 3, 4, 5, 6, 7, 8, 9, 10, 13, 15, 16, 17, and 27.

From: "Whomever" <whomever@wherever.army.mil>
To: 2028@redstone.army.mil

Subject: DA Form 2028

1. ***From:*** Joe Smith
2. *Unit:* home
3. ***Address:*** 4300 Park
4. ***City:*** Hometown
5. ***St:*** MO
6. ***Zip:*** 77777
7. ***Date Sent:*** 19−OCT−93
8. ***Pub no:*** 55−2840−229−23
9. ***Pub Title:*** TM
10. ***Publication Date:*** 04−JUL−85
11. *Change Number:* 7
12. *Submitter Rank:* MSG
13. ***Submitter FName:*** Joe
14. *Submitter MName:* T
15. ***Submitter LName:*** Smith
16. ***Submitter Phone:*** 123−123−1234
17. ***Problem:*** **1**
18. *Page:* 2
19. *Paragraph:* 3
20. *Line:* 4
21. *NSN:* 5
22. *Reference:* 6
23. *Figure:* 7
24. *Table:* 8
25. *Item:* 9
26. *Total:* 123
27. ***Text:***

This is the text for the problem below line 27.

RECOMMENDED CHANGES TO PUBLICATIONS AND BLANK FORMS

For use of this form, see AR 25–30; the proponent agency is ODISC4.

Use Part II (*reverse)* for Repair Parts and Special Tool Lists (RPSTL) and Supply Catalogs/ Supply Manuals (SC/SM)

DATE: 8/30/02

TO: (*Forward to proponent of publication or form)(Include ZIP Code)*
Commander, U.S. Army Aviation and Missile Command
ATTN: AMSAM–MMC–MA–NP
Redstone Arsenal, AL 35898

FROM: (*Activity and location)(Include ZIP Code)*
MSG, Jane Q. Doe
1234 Any Street
Nowhere Town, AL 34565

PART 1 – ALL PUBLICATIONS (EXCEPT RPSTL AND SC/SM) AND BLANK FORMS

PUBLICATION/FORM NUMBER	DATE	TITLE
TM 9–1005–433–24	16 Sep 2002	Organizational, Direct Support, And General Support Maintenance Manual for Machine Gun, .50 Caliber M3P and M3P Machine Gun Electrical Test Set Used On Avenger Air Defense Weapon System

ITEM NO.	PAGE NO.	PARA–GRAPH	LINE NO. *	FIGURE NO.	TABLE NO.	RECOMMENDED CHANGES AND REASON
1	WP0005 PG 3		2			Test or Corrective Action column should identify a different WP number.

EXAMPLE

** Reference to line numbers within the paragraph or subparagraph.*

TYPED NAME, GRADE OR TITLE	TELEPHONE EXCHANGE/ AUTOVON, PLUS EXTENSION	SIGNATURE
MSG, Jane Q. Doe, SFC	788–1234	

TO: (*Forward direct to addressee listed in publication)*	**FROM:** (*Activity and location) (Include ZIP Code)*	**DATE**
Commander, U.S. Army Aviation and Missile Command ATTN: AMSAM–MMC–MA–NP Redstone Arsenal, AL 35898	MSG, Jane Q. Doe 1234 Any Street Nowhere Town, AL 34565	8/30/02

PART II – REPAIR PARTS AND SPECIAL TOOL LISTS AND SUPPLY CATALOGS/SUPPLY MANUALS

PUBLICATION NUMBER	DATE	TITLE

PAGE NO.	COLM NO.	LINE NO.	NATIONAL STOCK NUMBER	REFERENCE NO.	FIGURE NO.	ITEM NO.	TOTAL NO. OF MAJOR ITEMS SUPPORTED	RECOMMENDED ACTION

PART III – REMARKS (*Any general remarks or recommendations, or suggestions for improvement of publications and blank forms. Additional blank sheets may be used if more space is needed.)*

EXAMPLE

TYPED NAME, GRADE OR TITLE	TELEPHONE EXCHANGE/AUTOVON, PLUS EXTENSION	SIGNATURE
MSG, Jane Q. Doe, SFC	788–1234	

RECOMMENDED CHANGES TO PUBLICATIONS AND BLANK FORMS For use of this form, see AR 25–30; the proponent agency is ODISC4.	Use Part II (*reverse)* for Repair Parts and Special Tool Lists (RPSTL) and Supply Catalogs/ Supply Manuals (SC/SM)	DATE
TO: (*Forward to proponent of publication or form)(Include ZIP Code)* Commander, U.S. Army Aviation and Missile Command ATTN: AMSAM-MMC-MA-NP Redstone Arsenal, AL 35898	FROM: (*Activity and location)(Include ZIP Code)*	

PART 1 – ALL PUBLICATIONS (EXCEPT RPSTL AND SC/SM) AND BLANK FORMS

PUBLICATION/FORM NUMBER	DATE	TITLE

ITEM NO.	PAGE NO.	PARA–GRAPH	LINE NO. *	FIGURE NO.	TABLE NO.	RECOMMENDED CHANGES AND REASON

** Reference to line numbers within the paragraph or subparagraph.*

TYPED NAME, GRADE OR TITLE	TELEPHONE EXCHANGE/ AUTOVON, PLUS EXTENSION	SIGNATURE

TO: (*Forward direct to addressee listed in publication)* Commander, U.S. Army Aviation and Missile Command ATTN: AMSAM-MMC-MA-NP Redstone Arsenal, AL 35898	**FROM:** (*Activity and location) (Include ZIP Code)*	**DATE**

PART II – REPAIR PARTS AND SPECIAL TOOL LISTS AND SUPPLY CATALOGS/SUPPLY MANUALS

PUBLICATION NUMBER	DATE	TITLE

PAGE NO.	COLM NO.	LINE NO.	NATIONAL STOCK NUMBER	REFERENCE NO.	FIGURE NO.	ITEM NO.	TOTAL NO. OF MAJOR ITEMS SUPPORTED	RECOMMENDED ACTION

PART III – REMARKS (*Any general remarks or recommendations, or suggestions for improvement of publications and blank forms. Additional blank sheets may be used if more space is needed.)*

TYPED NAME, GRADE OR TITLE	TELEPHONE EXCHANGE/AUTOVON, PLUS EXTENSION	SIGNATURE

The Metric System and Equivalents

Linear Measure

1 centimeter = 10 millimeters = .39 inch
1 decimeter = 10 centimeters = 3.94 inches
1 meter = 10 decimeters = 39.37 inches
1 dekameter = 10 meters = 32.8 feet
1 hectometer = 10 dekameters = 328.08 feet
1 kilometer = 10 hectometers = 3,280.8 feet

Weights

1 centigram = 10 milligrams = .15 grain
1 decigram = 10 centigrams = 1.54 grains
1 gram = 10 decigram = .035 ounce
1 decagram = 10 grams = .35 ounce
1 hectogram = 10 decagrams = 3.52 ounces
1 kilogram = 10 hectograms = 2.2 pounds
1 quintal = 100 kilograms = 220.46 pounds
1 metric ton = 10 quintals = 1.1 short tons

Liquid Measure

1 centiliter = 10 milliters = .34 fl. ounce
1 deciliter = 10 centiliters = 3.38 fl. ounces
1 liter = 10 deciliters = 33.81 fl. o unces
1 dekaliter = 10 liters = 2.64 gallons
1 hectoliter = 10 dekaliters = 26.42 gallons
1 kiloliter = 10 hectoliters = 264.18 gallons

Square Measure

1 sq. centimeter = 100 sq. millimeters = .155 sq. inch
1 sq. decimeter = 100 sq. centimeters = 15.5 sq. inches
1 sq. meter (centare) = 100 sq. decimeters = 10.76 sq. feet
1 sq. dekameter (are) = 100 sq. meters = 1,076.4 sq. feet
1 sq. hectometer (hectare) = 100 sq. dekameters = 2.47 acres
1 sq. kilometer = 100 sq. hectometers = .386 sq. mile

Cubic Measure

1 cu. centimeter = 1000 cu. millimeters = .06 cu. inch
1 cu. decimeter = 1000 cu. centimeters = 61.02 cu. inches
1 cu. meter = 1000 cu. decimeters = 35.31 cu. feet

Approximate Conversion Factors

To change	*To*	*Multiply by*	*To change*	*To*	*Multiply by*
inches	centimeters	2.540	ounce-inches	Newton-meters	.007062
feet	meters	.305	centimeters	inches	.394
yards	meters	.914	meters	feet	3.280
miles	kilometers	1.609	meters	yards	1.094
square inches	square centimeters	6.451	kilometers	miles	.621
square feet	square meters	.093	square centimeters	square inches	.155
square yards	square meters	.836	square meters	square feet	10.764
square miles	square kilometers	2.590	square meters	square yards	1.196
acres	square hectometers	.405	square kilometers	square miles	.386
cubic feet	cubic meters	.028	square hectometers	acres	2.471
cubic yards	cubic meters	.765	cubic meters	cubic feet	35.315
fluid ounces	milliliters	29,573	cubic meters	cubic yards	1.308
pints	liters	.473	milliliters	fluid ounces	.034
quarts	liters	.946	liters	pints	2.113
gallons	liters	3.785	liters	quarts	1.057
ounces	grams	28.349	liters	gallons	.264
pounds	kilograms	.454	grams	ounces	.035
short tons	metric tons	.907	kilograms	pounds	2.205
pound-feet	Newton-meters	1.356	metric tons	short tons	1.102
pound-inches	Newton-meters	.11296			

Temperature (Exact)

°F	Fahrenheit temperature	5/9 (after subtracting 32)	Celsius temperature	°C

PIN: 070482-000

This fine document...

Was brought to you by me:

Liberated Manuals -- free army and government manuals

Why do I do it? I am tired of sleazy CD-ROM sellers, who take publicly available information, slap “watermarks” and other junk on it, and sell it. Those masters of search engine manipulation make sure that their sites that sell free information, come up first in search engines. They did not create it... They did not even scan it... Why should they get your money? Why are not letting you give those free manuals to your friends?

I am setting this document FREE. This document was made by the US Government and is NOT protected by Copyright. Feel free to share, republish, sell and so on.

I am not asking you for donations, fees or handouts. If you can, please provide a link to liberatedmanuals.com, so that free manuals come up first in search engines:

<A HREF=http://www.liberatedmanuals.com/>Free Military and Government Manuals</A>

– Sincerely
  Igor Chudov
  http://igor.chudov.com/