Marston Campbell

THE

GAS AND OIL ENGINE

THE

GAS AND OIL ENGINE

BY

DUGALD CLERK

MEMBER OF THE INSTITUTION OF CIVIL ENGINEERS
FELLOW OF THE CHEMICAL SOCIETY : MEMBER OF THE ROYAL INSTITUTION
FELLOW OF THE INSTITUTE OF PATENT AGENTS

NEW IMPRESSION (1904)

RE-ISSUE

JOHN WILEY & SONS
43 & 45 EAST NINETEENTH STREET
NEW YORK
1907

BIBLIOGRAPHICAL NOTE.

First printed September 1886; *Reprinted July* 1887; *June* 1890; *April* 1891; *January* 1893; *October* 1894. *Revised and Enlarged June* 1896; *Reprinted February* 1897; *Revised Edition November* 1899; *Reprinted January* 1902; *August* 1904.

PREFACE
TO
THE SIXTH EDITION.

MANY important changes have been made in the constructive details of gas engines since the first part of this work was published, and oil engines using heavy oil have become practicable motors, so that it has become necessary to bring the information in this book thoroughly up to date. In doing this the author thought it better to make additions rather than alterations on the original, and accordingly the first part of the book is retained in its original form, and two parts have been added : the second part deals with modern gas engines, both impulse-every-revolution and Otto cycle ; and the third part deals with the oil engine. The first part of the book thus remains in the form in which it is familiar to many engineers ; indeed, the author may say with truth all engineers interested in the gas engine throughout the world, because the book has been translated and published in German, and many parts extracted in French works, while it is largely used in America both by engineers and in the engineering classes of the Universities.

In dealing with the various engines the author has drawn upon his personal experience of gas and oil engines, now extending over twenty years, and he has endeavoured to discuss the various points involved in a dispassionate manner, pointing out to the engineer the difficulties as well as the advantages peculiar to each construction or type. This is very necessary if moderately rapid advance is to be made, and it appears to the author most undesirable to adopt the tone so often found in engineering literature of indiscriminate admiration of this or that firm's wonderful motor, when in reality the motor discussed in so far as it departs from standard practice is not an improvement, but the reverse. The author has accordingly freely criticised any points which appear to him defective in the various engines.

In this edition special attention has been paid to the oil engine, in view of its rapid rate of present development and the probability of its very extensive use for many new purposes, such as motor cars. Many engineers are now paying attention to the oil engine, to whom the subject is unfamiliar; and in the hope of proving useful to such new men on the work, the author has gone carefully into the discussion of the chemical nature of petroleum and the different methods of vaporising heavy oils.

In dealing with the oil engine the author has freely availed himself of the careful experiments on oil engines by the engineers for the Royal Agricultural Society's Show at the Cambridge Meeting. The author has made many tests himself; but as these were mostly made in the course of his professional work and were confidential, he has chosen for discussion the publicly made tests and descriptions rather than his personal tests.

In concluding, the author expresses his thanks to the Council of the Institution of Civil Engineers for the use of illustrations from papers by Professor Unwin and Mr. J. E. Dowson, published in the valuable Minutes of the Institution, and also for extracts of tests by Mr. Dowson, and tables by the author, also published in Institution papers.

The author also thanks the various makers of gas and oil engines who have allowed him to test their engines for the purposes of this book, and who have lent him blocks ; among those makers are Messrs. Crossley Bros. Limited, J. E. H. Andrew & Co. Limited, T. B. Barker & Co., Tangyes, Limited, Robey & Co. Limited, Wells Bros., Hornsby & Sons, Fielding & Platt, Mr. Peter Burt, and Mr. Bellamy of Andrew & Co.

Many of the drawings for the book, however, have been made by the author's draughtsmen directly from the engines.

In the Appendix the author has added a complete list of British gas and oil engine patents from 1791 to the end of 1893. All the English specifications from 1876, including this year, are in the author's possession, and he will be very pleased to freely allow those interested access to them.

D. C.

18 SOUTHAMPTON BUILDINGS, CHANCERY LANE,
LONDON : *June* 1896.

PREFACE

TO

THE FIRST EDITION.

In this work the author has endeavoured to systematise the knowledge in existence upon the subject, and to explain the science and practice of the Gas Engine in a way which he hopes may be useful to the engineer.

The historical sketch with which the book opens proves that, like other great subjects, the gas engine has long occupied men's minds.

The first six chapters treat of theory, including the distinguishing features of the gas engine method, classification, thermodynamics of the various types, and the chemical and physical phenomena of combustion and explosion.

In the seventh chapter, standard engines illustrative of the different types are described, and tests from each engine for power and consumption of gas are given. The diagrams and efficiencies are shortly discussed, compared with theory, and the various sources of loss pointed out.

The eighth chapter deals with typical igniting arrangements, and the ninth with governing gear and other mechanical details.

The tenth chapter briefly describes and discusses various theories which have been propounded concerning the action of the gases in the cylinder of the gas engine and in gaseous explosions.

In the last chapter the great sources of loss of heat still existing in the best gas engines are discussed, with the object of pointing out the way still open for further advance.

Many of the tests and most of the theoretical and practical discussion, result from the author's personal experience with the gas engine.

In the chapter on thermodynamics the author is much indebted to the work of the late Prof. RANKINE, and he has adopted, in treating of efficiency, some of the elegant formulæ of Dr. AIMÉ WITZ, of Lille, to whom as well as to Prof. SCHÖTTLER and Prof. THURSTON he has much pleasure in expressing his indebtedness.

D. C.

BIRMINGHAM : *July* 1886.

CONTENTS.

PART I.

THE GAS ENGINE UP TO THE YEAR 1886.

PART II.

GAS ENGINES PRODUCED SINCE 1886.

PART III.

OIL ENGINES.

APPENDIX I.

APPENDIX II.

THE
GAS ENGINE.

HISTORICAL SKETCH OF THE GAS ENGINE.

THE origin of the gas engine is but imperfectly known; by some it is dated as far back as 1680, when Huyghens proposed to use gunpowder for obtaining motive power. Papin, in 1690, continued Huyghens' experiments, but without success. The method used was a fairly practicable one. The explosion was used indirectly; a small quantity of gunpowder exploded in a large cylindrical vessel filled with air, expelled the air through check valves, thus leaving, after cooling, a partial vacuum. The pressure of the atmosphere then drove a piston down to the bottom of the vessel, lifting a weight or doing other work.

In a paper, published at Leipsic in 1688, Papin stated that, 'until now all experiments have been unsuccessful; and after the combustion of the exploded powder, there always remains in the cylinder about one-fifth of its volume of air.'

The Abbé Hautefeuille made similar proposals, but does not seem to have made actual experiments. These early engines cannot be classed as gas engines. The explosion of gunpowder is so different in its nature from that of a gaseous mixture that comparison is untenable. The first real gas engine described in this country is in Robert Street's patent, No. 1983, 1794. It contains a motor cylinder in which works a piston connected to a lever, from which lever a pump is driven. The bottom of the motor cylinder is heated by a fire; a few drops of spirits of turpentine being introduced and evaporated by the heat, the motor piston is drawn up, and air entering mixes with the inflammable vapour, the application of a flame to a touch-hole causing explosion; and the piston being driven up forces the pump piston down, so performing work in raising water. The details, as described, are crude, but the main idea is correct and was not improved upon in practice till very lately.

Samuel Brown's inventions come next. His patents are dated 1823 and 1826, Nos. 4874 and 5350. The principle used is ingenious, and easily carried out in practice, but it is not economical, and it gives a very cumbrous machine for the amount of power produced. A partial vacuum is produced by filling a vessel with flame, and expelling the air it contains, a jet of water is thrown in and condenses the flame, giving vacuum. The atmospheric pressure thus made available for power is utilised in any engine of ordinary construction.

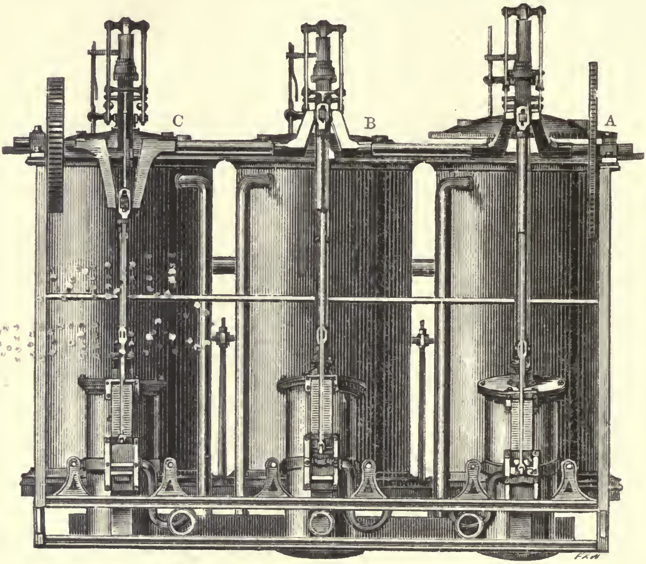

A, Cover raised, vessel filling with flame. B and C, Covers down, vessels vacuous.

FIG. 1.—Brown's Gas-vacuum Engine, 1826.

Brown's apparatus consists essentially of a large upright cylindrical vessel fitted on the top with a movable valve cover, of the whole diameter of the cylinder. The cover is raised and lowered from and to its seat by a lever and suitable gear at proper times. The gas supply pipe enters the cylinder at the bottom ; the cylinder being filled with air, and the valve raised, the gas cock is opened and the issuing gas lighted by a small flame as it enters the cylinder. The flame produced fills the whole vessel, expelling the air it contains ; the valve being now lowered and the gas supply shut off, the water-jet is thrown in and causes condensation. To keep up a constant supply of power, several of these cylinders are required, so that one at least may be always vacuous while the others are in the process of obtaining the vacuum. In the specification three are shown and three engines. The engines are all connected to the same crank-shaft. Notwithstanding this provision, the motion must have been irregular. The idea was evidently suggested by the condensing steam engine ; instead of using steam to obtain a vacuum flame is employed. Brown's engine, although uninteresting theoretically, is important as being the first gas engine undoubtedly at work. According to the 'Mechanics' Magazine,' published in London, a boat was fitted with one including a complete gas generating plant, and was run upon the Thames not for public use but only as an experiment. Another engine was made in combination with a road carriage ; it also ran in London. If these statements are to be relied upon, then Samuel Brown was a really great man and should be considered as the Newcomen of the gas engine ; in some points he achieved a measure of success not yet equalled by his successors.

W. L. Wright, 1833, *No.* 6525.—In this specification the drawings are very complete and the details are carefully worked out. The explosion of a mixture of inflammable gas and air acts directly upon the piston, which acts through a connecting rod upon a crank-shaft. The engine is double-acting, the piston receiving two impulses for every revolution of the crank-shaft. In appearance it resembles a high pressure steam engine of the kind known as the table pattern. The gas and air are supplied to the motor cylinder from separate pumps through two reservoirs, at a pressure a few pounds above atmosphere, the gases (gas and air) enter spherical spaces at the ends of the motor cylinder, partly displacing the previous contents, and are ignited while the piston is crossing the dead centre. The explosion pushes the piston up or down through its whole stroke ; at the end of the stroke the exhaust valve opens and the products of combustion are discharged during the return, excepting the portion remaining in the spaces not entered by the piston. The ignition is managed by an external flame and touch-hole. The author has been unable to find whether the engine was ever made, but the knowledge of the detail essential to a working gas engine shown by the drawings indicates that it or some similar machine had been worked by the

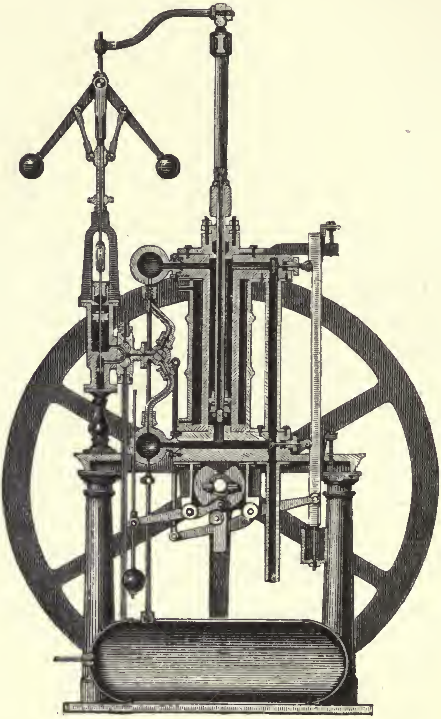

FIG. 2.—Wright's Gas-exploding Engine, 1833.

inventor. Both cylinder and piston are water-jacketed, as would have been necessary in a double-acting gas engine to preserve the working parts from damage from the intense heat of the explosion. This is the earliest drawing in which this detail is properly shown.

William Barnett, 1838, *No.* 7615.—Barnett's inventions as described in his specification are so important that they require more complete description than has been here accorded to earlier inventors.

Barnett is the inventor of a very good form of igniting arrangement. The flame method most widely used at the present time was originated by him.

Barnett is also the inventor of the compression system now so largely used in gas engines. The Frenchman, Lebon, it is true, described an engine using compression, in the year 1801, but his cycle is not in any way similar to that proposed by Barnett, or used in the modern gas engine. Barnett describes three engines. The first is single-acting, the second and third are double-acting; all compress the explosive mixture before igniting it. In the first and second engines the inflammable gas and air is compressed by pumps into receivers separate from the motor cylinder, but communicating with it by a short port which is controlled by a piston valve. The piston valve also serves to open communication between the cylinder and the air when the motor piston discharges the exhaust gases.

In the third engine the explosive mixture is introduced into the motor cylinder by pumps, displacing as it enters the exhaust gases resulting from the previous explosion; the motor piston by its ascent or descent compresses the mixture. Part of the compression is accomplished by the charging pumps, but it is always completed in the motor cylinder itself.

In all three engines the ignition takes place when the crank is crossing the dead centre, so that the piston gets the impulse during the whole forward stroke.

Fig. 3 is a sectional elevation of the first engine, showing the principal working parts, but omitting all detail not required for explaining the action.

There are three cylinders containing pistons; A is the motor piston, B is the air pump piston. The gas pump piston cannot be seen in the section, but works in the same crosshead as B. The motor piston is suitably connected to the crank shaft, and the other two are also connected by levers in such manner that all three move simultaneously up or down. The pump pistons, moving up, take respectively air and inflammable gas into their cylinders; upon the down stroke the gases are forced through an automatic lift valve into the receiver D, and there mix. When the down stroke is complete and the receiver is fully charged with the explosive mixture, the pressure has risen to about 25 lbs. per square inch above atmosphere. At the same time as the pumps are compressing, the motor piston is moving down and discharging the

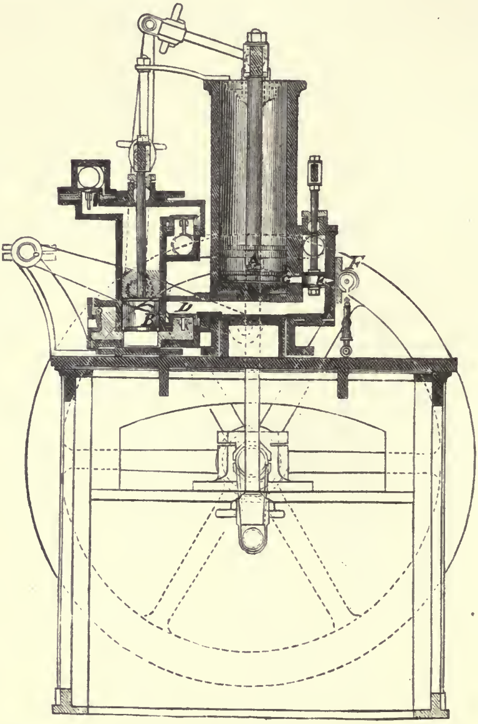

FIG. 3.—Barnett Gas Engine.

exhaust gases from the power cylinder; it reaches the bottom of its stroke just when compression is complete. The piston valve E then opens communication between the receiver and the motor, at the same time closing to atmosphere. The motor cylinder being in free communication with the receiver, the explosion of the mixture is accomplished by the igniting cock or valve F; the pressure resulting actuates the motor piston during its whole upward stroke, the hot gases flowing through the port G precisely as steam would do. The volume of the receiver being constant, the pressure in the motor cylinder slowly falls by expansion, due to the movement of the piston, upon which work is performed, and by cooling, the pressure still existing in the cylinder when the stroke is complete depending on the ratio between the volume swept by the motor piston and the volume of the receiver.

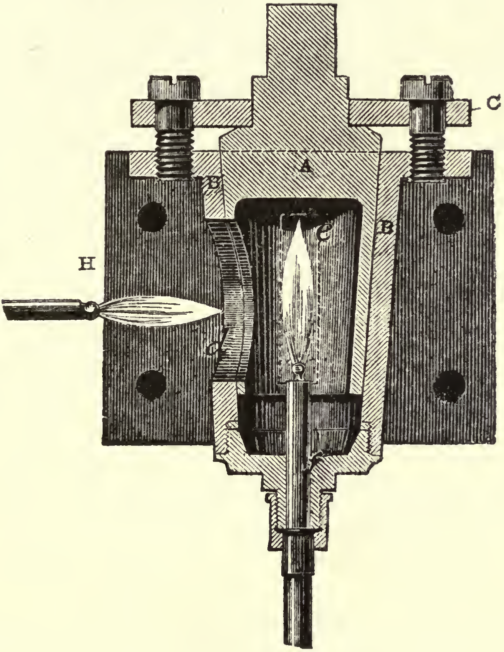

FIG. 4 —Barnett's Igniting Cock.

The down stroke again expels the products of combustion, the valve opening to atmosphere, while the compression again takes place. This cycle gives a single-acting engine. It is obvious that as the piston A does not enter the receiver it cannot displace the exhaust gases there. If means are not taken to expel these gases they must mix with the fresh explosive charge pumped in.

It is very desirable that these gases should be as completely as possible discharged. An exhausting pump is described for doing this, but in small engines it adds an additional complication; and so Barnett states that in some cases it may be omitted. The exhaust gases do not so injuriously affect the action of small gas engines.

The igniting valve is very ingenious. It is shown at Fig. 4, on a larger scale. A hollow conical plug A is accurately ground into the shell B, and is kept in position by the gland C; the shell has two long slits D and E; the plug has one port so cut that as the plug moves it shuts to the slit D before opening to E. In the bottom of the shell there is screwed a cover carrying a gas burner F, which may be lit while the port in the plug is open to the air through D. The external constant flame H lights it. So long as the plug remains in this position the internal flame continues to burn quietly. If the plug be now turned to shut to the outer air, it opens to the slit E, and as that contains explosive mixture it at once ignites. The explosion extinguishes the internal flame, but it is again lighted at the proper time when the plug is moved round. The valve acts well and is almost identical in principle with the flame-igniting arrangements of Hugon, Otto and Langen and Otto.

Barnett's second engine is identical with his first except that it is double-acting, and therefore requires a greater number of parts.

Barnett's third engine is worthy of careful description. Fig. 5 is a vertical section of the principal parts. It is double-acting. It has three cylinders, motor, air-pump and gas-pump; the air and gas pumps are single-acting, the motor piston is double-acting. The pumps are driven from a separate shaft, which is actuated from the main crank shaft by toothed wheels; the wheel upon the pump shaft is half the diameter of that on the motor shaft, so that it makes two revolutions for one of the other. The pumps therefore make one up-and-down stroke for each up or down stroke of the motor piston ; the angles of the cranks are so set that they (pumps) discharge their contents into one or other side of the motor cylinder at every stroke ; the exhaust gases are partly displaced by the fresh explosive mixture, and the motor piston completes the compression in the motor cylinder itself. When full up or down the igniting cock acts, and the explosion drives the piston to the middle of its stroke ; it here runs over a port in the middle of the cylinder, and the pressure at once falls to atmosphere.

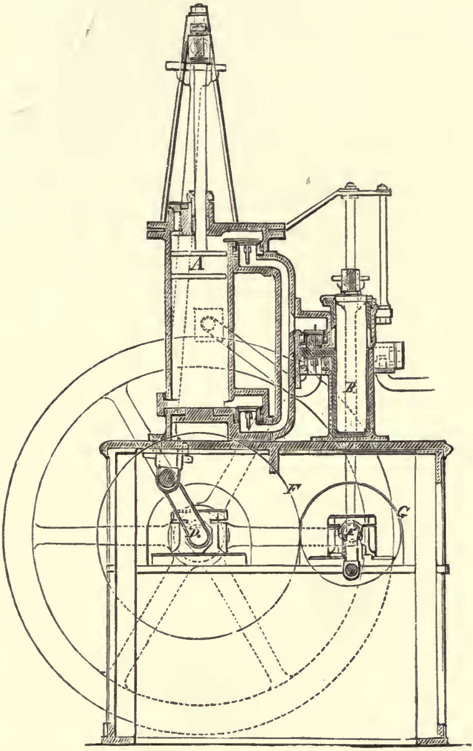

FIG. 5.—Barnett Engine.

A is the motor piston ; B is the air-pump piston ; C is the gas-pump piston, which is behind the air-pump, and therefore not seen in the section ; D is the main crank shaft ; E the pump shaft driven from the main shaft by the wheels F and G. The engine is exceedingly interesting as the first in which the compression is accomplished in the motor cylinder, but it is not so good a machine as the first because of the difficulty of obtaining a sufficient amount of expansion.

From 1838 to 1854 inclusive eleven British patents were applied for ; some were not completed but only reached the provisional stage. Of these patents by far the most important is Barnett's ; the others are interesting as showing the gradual increase of attention the subject attracted. The other names are Ador, 1838 ; Johnson, 1841 ; Robinson, 1843 ; Reynolds, 1844 ; Brown, 1846 ; Roger, 1853, also Bolton and Webb, making three patents for the year ; for 1854 two patents, Edington and Barsanti and Matteucci. None of the proposals in these patents are really valuable or novel, being anticipated by either Street, Wright, or Samuel Brown. Robinson's is the best, being similar to Lenoir's in some of its details, and showing distinctly a better understanding of gas engine detail.

A. V. Newton, 1855, *No.* 562.—This specification is interesting, and describes for the first time a form of igniting arrangement only now coming into use ; it seems to be identical with the invention of the American Drake, although not described as a communication from him. It is a double-acting engine, and takes into the cylinder a charge of gas and air mixed, during a portion of the stroke, at atmospheric pressure. The igniting arrangement is a thimble-shaped piece of hard cast-iron which projects into a recess formed in the side of the cylinder ; it is hollow, and is kept at all times red-hot by a blow-pipe flame projected into it by a small pump. When the piston uncovers the recess the explosive gases coming in contact with it ignite, and the pressure produced drives it forward.

This is the first instance of ignition by contact with red-hot metal ; the proposal has often been made since then in varying forms.

Barsanti and Matteucci, 1857, *No.* 1655.—This is the first free piston engine ever proposed ; instead of allowing the explosion to act directly upon the motive power shaft through a connecting rod, at the moment of explosion the piston is perfectly free. The cylinder is very long, and is placed vertically. When the explosion occurs, it expends its power in giving the piston velocity ; the expansion therefore takes place with considerable rapidity, and the piston, gaining speed until the pressure upon it falls to atmosphere, moves on, till the energy of motion is absorbed doing work on the external air, lifting the piston and in friction. When the energy is all absorbed in this manner it stops ; it has reached the top of its stroke. A partial vacuum has been formed in the cylinder, and the weight has been raised through the stroke. It now returns under the pressure of the atmosphere and its own weight ; in returning, a rack attached to the piston engages the motive shaft and drives it. The cooling of the gases as the piston descends continues and helps to keep up the vacuum.

The method although indirect is economical. Three advantages are gained by it—rapid expansion, considerable expansion (an expansion of six times is common in these engines), and also some of the advantages of a condensor.

Fig. 6 shows a vertical section of their best modification. The motor piston A working in the tall vertical cylinder B is attached to the rack C, which works into the toothed wheel D. The motor shaft E revolves in the direction of the arrow, and it is provided with a ratchet ; a pall upon the wheel D engages the ratchet on the down stroke of the piston only, on the up stroke it slips freely past the ratchet. The piston A is therefore quite free to move without the shaft on the up stroke, but it engages on the down stroke. The cams F and G are arranged to strike projections upon the rack, and so raise or lower the piston. It is raised when the charge is to be taken in, and lowered when it has completed its working stroke and the exhaust gases have to be discharged. When raised the valve H is in the position shown. Air first enters the cylinder through the port I, which also serves to discharge the exhaust. After the piston has uncovered the port K the valve H shuts on I, opening at the same time on K ; the gas supply then enters and mixes more or less perfectly with the air previously introduced.

A small further movement of the piston now closes the valve, and the explosion is caused by the passage of the electric spark in the position indicated upon the drawing. The piston shoots up freely to the top of its stroke, to give out the work stored up usefully upon its return.

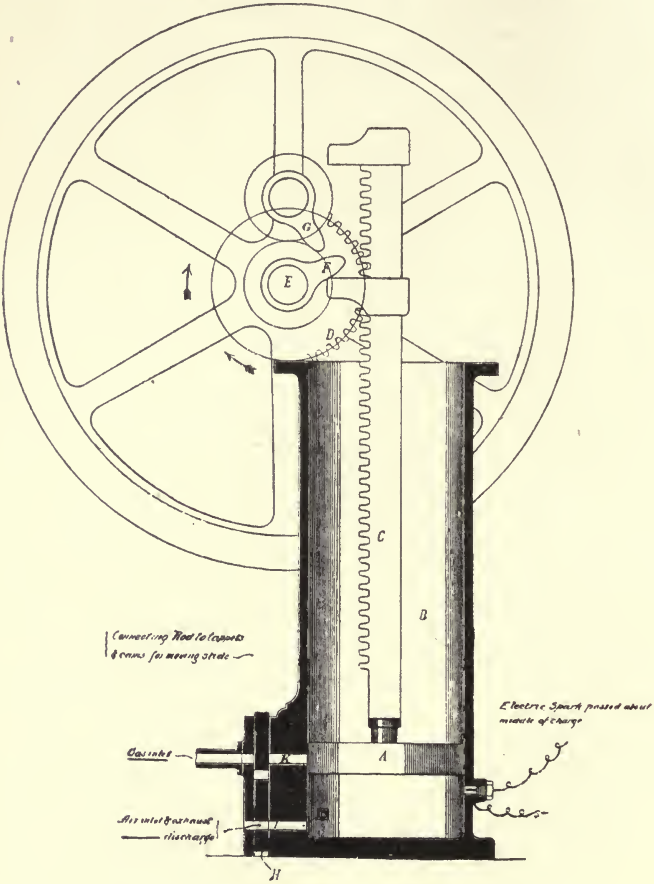

FIG. 6.—Barsanti and Matteucci Engine, 1857.

As the next engine to be described marks the beginning of the practicable stage of gas engine development, it is advisable to summarise before proceeding.

Previous to 1860 the gas engine was entirely in the experimental stage. Many attempts were made, but none of the inventors sufficiently overcame the practical difficulties to make any of their engines commercially successful. This was mostly due to the very serious nature of the difficulties themselves, but it was also due to too great ambition of the inventors ; they wished not only to compete with the steam engine for small powers, but for large powers. They thought in fact more to displace the steam engine than to compete with it.

This is clearly shown in many of their descriptions of the applications of their inventions.

The greatest credit is due to Wright and Barnett. Wright very closely proposed the modern non-compression system, Barnett the modern compression system. Barnett is also the originator of one of the modern flame systems for ignition. Barsanti and Matteucci follow in order of merit as the inventors of the free-piston gas engine.

M. Lenoir occupies the honourable position of the inventor of the first gas engine ever actually introduced to public use. The engine was not strikingly novel ; nothing was done in it which had not been proposed before, but its details were thoroughly and carefully worked out. It was in fact the first to emerge from the purely experimental stage. Lenoir's real credit consists in overcoming the practical difficulties sufficiently to make previous proposals fairly workable.

The principle is exceedingly simple and evident. The piston moves forward for a portion of its stroke, by the energy stored in the fly wheel, and takes into the cylinder a charge of gas and air at the ordinary atmospheric pressure. The valves cut off communication, and the explosion is occasioned by the electric spark ; this propels the piston to the end of the stroke. Exhausting is done precisely as in the steam engine.

The engine is simply an ordinary high-pressure steam engine with valves arranged to admit gas and air and discharge the products of combustion. Fig. 7 is an external elevation of a three-horse engine. It was first constructed in Paris in 1860 by M. Hippolyte

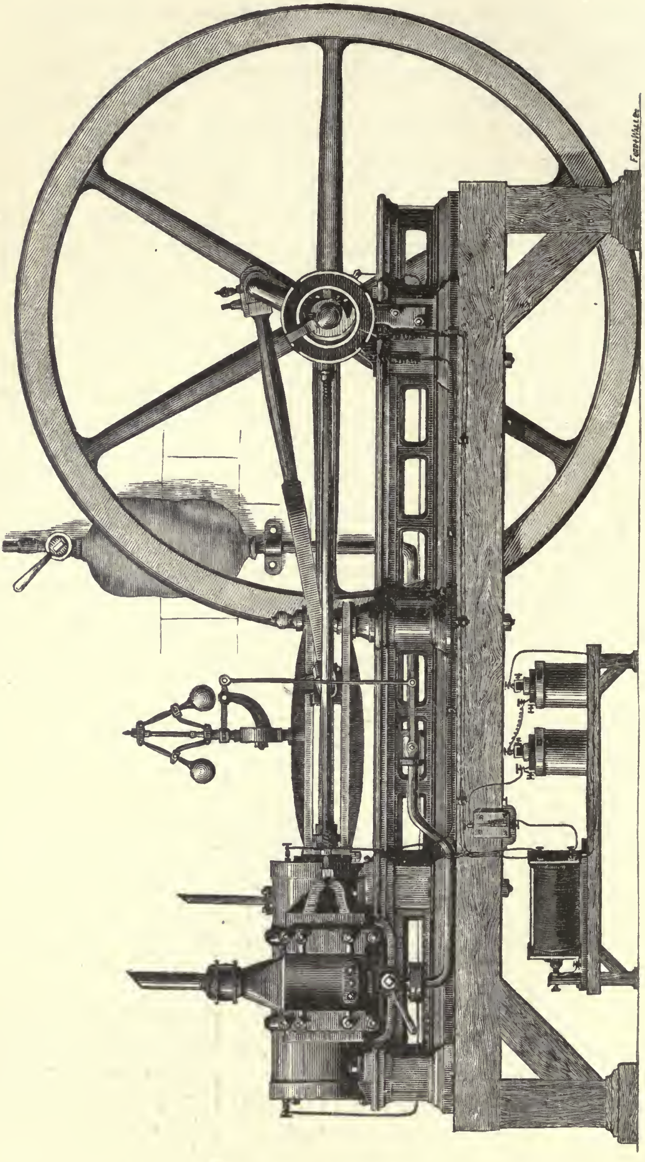

FIG. 7.—Lenoir's Gas Engine.

Marinoni. In Moigno's 'Cosmos' of that year it is stated that two engines were in course of manufacture, one of six horse-power, the other of twenty.

The early statements of its economy were ludicrously inaccurate. A one horse-power engine consumed, it was said, but 3 cubic metres (106 cubic ft. nearly) of coal gas in twelve hours' work, and therefore cost for fuel not more than one-half of what a steam engine would have done.

The actual consumption was speedily shown to be much nearer 3 cubic metres per effective horse-power per hour.

Notwithstanding the high consumption, the engine had many good points ; its action was exceedingly smooth ; no shock whatever was heard from the explosion. Indeed it is quite impossible when watching the engine in motion to realise that regular explosions are occurring. The motion is as smooth and silent as in the best steam engines.

In the 'Practical Mechanics' Journal' of August 1865, there is an article describing the progress made by the engine since the date of its introduction, from which it appears that in Paris and France from 300 to 400 engines were then at work, the power ranging from half horse to three horse.

The Reading Iron Works Company, Limited, at Reading, undertook the manufacture for this country. One hundred engines were made and delivered by them ; several of them have continued at work till now. Notably one engine inspected by the author at Petworth House, Petworth, worked for twenty years pumping water, and is even yet in good condition.

The work performed by the engines was multifarious in its character—printing, pumping water, driving lathes, cutting chaff, sawing stone, polishing marble, in fact, wherever from one-half to three horse-power was sufficient.

Lenoir's patent in this country was obtained by J. H. Johnson, 1860, No. 335. It describes very closely the engine as manufactured both in France and England. The subsequent patent, 1861, No. 107, does not seem to have been carried into effect.

These specifications contain many erroneous ideas, showing the notions then prevalent among inventors of the nature of gaseous explosions. Lenoir erroneously supposed that the economy of his engine would be improved if he could obtain a slower explosion. He evidently thought that the power imparted to the piston by explosion was similar in nature to a sudden blow—a rapid rise of pressure, and a fall nearly as rapid. He therefore attempted to avoid explosion by such expedients as stratification and injection of steam or water spray. The stratification idea he very clearly expressed in his second specification, stating that 'the object of preventing the admixture of air and gas is to avoid explosion.' It is somewhat extraordinary to find notions so erroneous common at a time when Bunsen's work had clearly proved the continuous nature of the combustion in gaseous explosions, and when Hirn had made experiments which showed that the heat evolved by explosion in a gas engine was only a small part of the total heat of the combustion, the heat which did not appear during explosion being produced during expansion.

Other speculations on the cause of the uneconomical working of the engine were frequent, but the true reason was fully explained by Gustav Schmidt in a paper read before 'The Society of German Engineers' in 1861. He states: 'The results would be far more favourable if compression pumps, worked from the engine, compressed the cold air and cold gas to three atmospheres before entrance into the cylinder; by this a greater expansion and transformation of heat is possible.'

This opinion became common at this time. Compression engines were proposed with great clearness and a full understanding of the advantages to be gained.

Million, 1861, *No.* 1840.—This Frenchman had exceedingly clear ideas of the advantages of compression; he evidently considers himself as the first to propose its use in a gas engine, apparently unaware of the existence of Barnett's engine already described. He claims the exclusive right to use compression in the most emphatic language.

The first engine described is exactly what Schmidt asks for. Separate pumps compress the air and gas into a reservoir, from which the movement of the motor piston, during a portion of the stroke, withdraws its charge under compression. Ignition is accomplished by the electric spark, and the piston moves forward under the high pressure produced. He states:

'In ordinary air engines the operation of the motive cylinders is analogous to that of the pumps, the result being that there are two cylinders, which act in directions contrary to each other, and that the pump, which is an organ of resistance, even works at a greater pressure than that of the motive cylinder, which is an organ of power. Thus these engines are very large in proportion to their power. On the contrary by employing gases under the conditions above explained, these engines will exert great power in proportion to their dimensions. The sudden ignition of the gases in the motive cylinder causes the latter to work at an operative pressure much greater than that of the pumps.'

The advantage of compression in a gas engine could not be more fully and clearly stated. But he goes even a step further; he sees that the portion of the motor piston stroke spent in taking in the charge under compression, is a disadvantage, and he proposes to make the whole stroke available for power by providing a space at the end of the cylinder in which the gases are compressed.

'Instead of introducing the cold gases into the cylinders, during a portion of the stroke and igniting them afterwards, when the induction ceases . . . another arrangement might be adopted. The motive cylinder might be made longer than necessary, in order that the piston should always leave between it and the end of the cylinder a greater or less space, according to the pleasure of the constructor, such as one-fourth or one-third, more or less, of the volume generated by the motive piston. This space is called by the inventor a cartridge. On opening the slide valve the gases could be allowed to enter suddenly from the pressure reservoir into this cartridge towards the dead point, and this induction having ceased, an electric spark would ignite the gases in the cartridge by which the driving piston would be set in motion.'

Such an engine would resemble in its action the best modern compression engines. The difficulties of ignition however are too considerable to be overcome without further detail.

The compression idea at this date was evidently widely spread, because it again crops up in a remarkably clever pamphlet by M. Alph. Beau de Rochas, published at Paris in 1862. He advances a step further than Million, and investigates the conditions of greatest economy in gas engines using compression, with reference to volume of hot gases and surfaces exposed. He states that to obtain economy with an explosion engine, four conditions are requisite :

1. The greatest possible cylinder volume with the least possible cooling surface.
2. The greatest possible rapidity of expansion.
3. The greatest possible expansion ; and
4. The greatest possible pressure at the commencement of the expansion.

In using boiler tubes, he states, the efficiency of the heat transmitted increases with reduction in the diameter of the tubes. In the case of engine cylinders, therefore, the loss of heat of explosion would be in inverse ratio to the diameter of the cylinders.

Therefore, he reasons, an arrangement which for a given consumption of gas, gives cylinders of the greatest diameters, will give the best economy, or least loss of heat to the cylinder. One cylinder only must be employed in such an engine.

But loss of heat depends also upon time ; cooling, therefore, will be proportionately greater as the working speed is slower.

The sole arrangement capable of combining these conditions, he states, consists in using the largest possible cylinder, and reducing the resistance of the gases to a minimum. This leads, he states, to the following series of operations.

1. Suction during an entire outstroke of the piston.
2. Compression during the following instroke.
3. Ignition at the dead point and expansion during the third stroke.
4. Forcing out of the burned gases from the cylinder on the fourth and last return stroke.

The ignition he proposes to accomplish by the increase of temperature due to compression. This he expects to do by compressing to one-fourth of the original volume.

In our own country the late Sir C. W. Siemens proposed compression in 1862. The idea was exceedingly widely spread, as is evident from those numerous and independent inventions. The practical experience to enable it to be successfully effected had yet to be created, however, and this took many years of patient work.

The igniting arrangement was the first weak point requiring improvement. The electrical method of Lenoir was exceedingly delicate and troublesome.

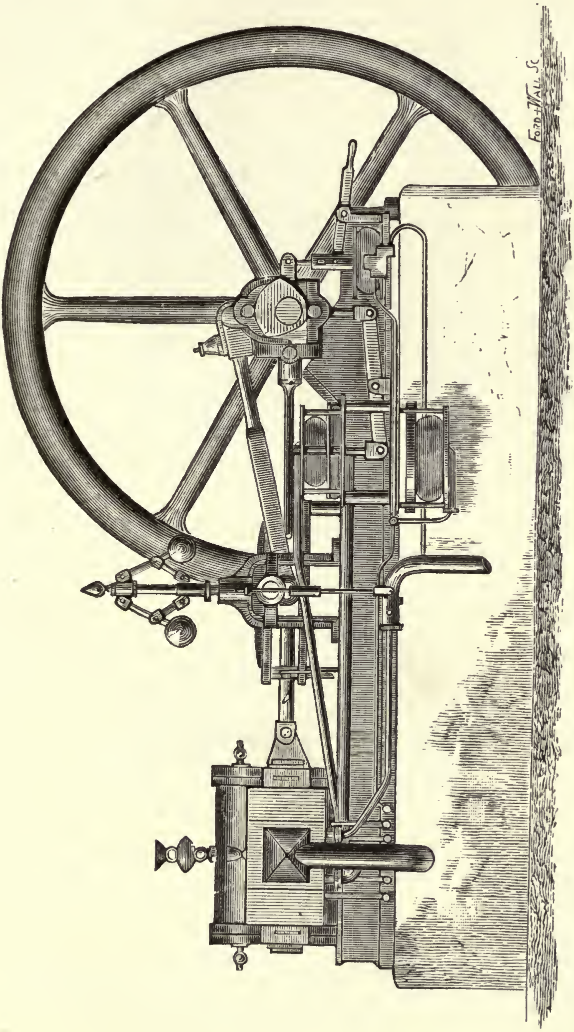

FIG. 8.—Hugon Engine.

Hugon's engine, produced in 1865, was similar to Lenoir's; but the igniting was accomplished by flame, a modification of Barnett's, 1838, using a slide valve instead of a lighting cock. The flame ignition was certain and easily kept in order. In other points the engine was a great improvement upon its predecessor. The lubrication was improved by injecting water into the cylinder and the cooling water jacket was better arranged. As a result the consumption of gas was reduced.

Fig. 8 is an external elevation of the Hugon engine.

Mr. Otto now appears upon the scene. Before him much had been done in inventing and studying engines, but it remained for him by sheer perseverance and determination of character, to overcome all difficulties and reduce to successful practice the theories of his predecessors.

In 1867 Messrs. Otto and Langen exhibited at the Paris exhibition of that year, their free piston engine, exterior elevation shown at fig. 9. It was absolutely identical in principle with the previous invention of Barsanti and Matteucci, but the details were completely and successfully carried out. The Germans succeeded commercially and scientifically when the Italians completely failed.

Flame ignition was used and great economy was obtained, a half-horse engine, according to Professor Tresca, giving over half-horse power effective, on a gas consumption at the rate of 44 cubic feet per effective horse-power per hour. This is less than half the consumption of Lenoir or Hugon; accordingly the prejudice excited by the strange appearance and noisy action of the engine did not prevent its sale in large numbers. It completely crushed Lenoir and Hugon, and held almost sole command of the market for ten years, several thousands being constructed in that period.

The Brayton gas engine appeared in America in 1873, but although more mechanical than any free piston engine, its economy was insufficient to enable it to compete. It was better than Lenoir or Hugon, but not nearly so good as Otto and Langen.

Other inventors attempted free piston engines, but with small success.

In 1876 Mr. Otto superseded his former invention by the production of the 'Otto Silent' engine, now known all over the globe. It is a compression engine, using the precise cycle described in 1862 by Beau de Rochas, but carried out in a most perfect manner and using a good form of flame ignition, a modified Otto and Langen valve in fact. The economy is greater than that of any previous engine, one indicated horse being obtained upon 20 cubic feet of gas, or one effective horse upon 24 to 30 cubic feet per hour.

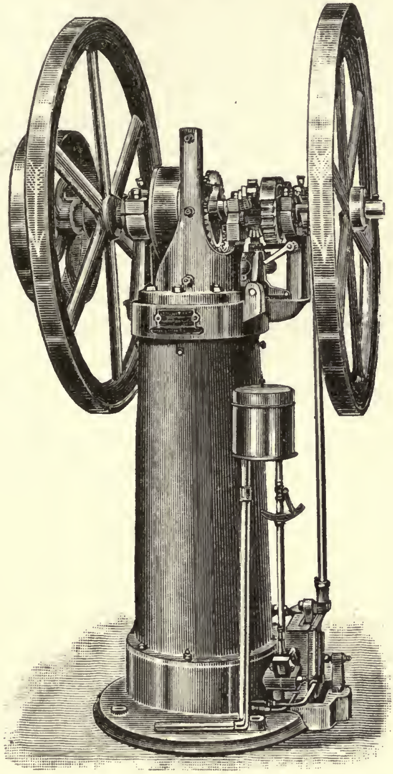

FIG. 9.—Otto and Langen Free Piston Engine.

This engine has established gas engines upon a firm commercial basis, 15,000 having been sold since its invention ; this represents at least an effective power of 90,000 horses.

Strangely enough, although Mr. Otto is the greatest and most successful gas engine inventor who has yet appeared, he adheres to Lenoir's erroneous ideas, and in his specification 2081 of 1876 he attributes the economy of his machine to a slow explosion caused by arrangement of gases within the cylinder.

The compression, which is the real cause of the economy and efficiency of the machine, he seems to consider as an accidental and unessential feature of his invention.

The gas engine, like all great inventions, is the result of the long-continued labour of many minds ; it is a gradual growth due to the united labours of many inventors. In the earlier days of motive power, explosion was as much in the minds of the inventors, Huyghens and Papin, as steam, but the mechanical difficulties proved too great. The constructive skill of the time was heavily taxed by the rude steam engine of Newcomen, and still more unequal to the invention of James Watt ; it was in 1774 that Watt ran his first successful steam engine at Soho Works, Birmingham. Twenty years later, 1794, Street's gas engine patent indicated the direction of men's minds, seeking a rival for steam before steam had been completely introduced. The experience and skill accumulating in the construction of the steam engine made the gas engine more and more possible.

The proposals of Brown, 1823 ; Wright, 1833 ; Barnett, 1838 ; Barsanti and Matteucci, 1857, show gradually increasing knowledge of detail and the difficulties to be overcome, all leading to the first practicable engine in 1860, the Lenoir.

Since that date till now, twenty-five years, great advances have been made, and at present the gas engine is the only real rival to steam.

CHAPTER I.

THE GAS ENGINE METHOD.

GAS ENGINES, while differing widely in theory of action and mechanical construction, possess one feature in common which distinguishes them from other heat engines : that feature is the method of heating the working fluid.

The working fluid is atmospheric air, and the fuel required to heat it is inflammable gas. In all gas engines yet produced, the air and gas are mixed intimately with each other before introduction to the motive cylinder ; that is, the working fluid and the fuel to supply it with heat are mixed with each other before the combustion of the fuel.

The fuel, which, in the steam and in most hot-air engines, is burned in a separate furnace, is, in the gas engine, introduced directly to the motive cylinder and burned there. It is indeed part of the working fluid.

This method of heating may be called the gas-engine method, and from it arises at once the great advantages and also the great difficulties of these motors.

Compare first with the steam engine. In it there exist two great causes of loss : water is converted into steam, absorbing a great amount of heat in passing from the liquid to the gaseous state ; after it has been used in the engine it is rejected into the atmosphere or the condenser, still existing as steam. The heat necessary to convert it from the liquid to the gas is consequently in most part rejected with it. Loss, occurring in this way, would be small if high temperatures could be used ; but this is the point where steam fails. High temperatures cannot be obtained without pressure so great as to be quite unmanageable. The attempt to obtain high temperatures by super-heating has often been made, but without any substantial success. Although the difficulty of excessive pressure is avoided, another set of troubles are introduced. All the heat to be given to the gaseous steam must pass through the iron plates forming the boiler or super-heater, which plates will only stand a comparatively low temperature, certainly not exceeding that of a low red heat, or about 600° to 700° C. Steam, being a gas, is much more difficult to heat than water; it follows that even these temperatures cannot be attained without enormous addition to the heating surface. The difficulties of making a workable engine using high temperature steam are so great that even so distinguished an engineer and physicist as the late Sir C. W. Siemens failed in his attempts, which extended over many years. It may be taken then that low temperature is the natural and unavoidable accompaniment of the steam method, arising from the necessary change of the physical state of the working fluid, and the limited temperature which iron will safely bear. The originators of the science of thermodynamics have long taught that the maximum efficiency of a heat engine is obtained when there is the maximum difference between the highest and lowest temperatures of the working fluid. So long ago as 1854, Professor Rankine read a paper before the British Association, 'On the means of realising the advantages of the Air Engine,' in which he expresses his belief that such engines will be found to be the most economical means of developing motive power by the agency of heat. In this opinion he stood by no means alone. Engineers so able as Stirling, Ericsson, and Siemens; physicists so distinguished as Dr. Joule, and Sir Wm. Thomson, devoted much energy and study to their practice and theory. Notwithstanding all their efforts, aided by a host of less able inventors, the difficulties proved too formidable; and although more than thirty years have now passed since Rankine announced his belief, the hot-air engine proper, has made no real advance. Similar causes to those acting in the steam engine impose a limit here. It is true the complication of changing physical state is avoided, but the limited resistance of iron to heat acts as powerfully as ever. Air is much more difficult to heat than water, and, therefore, requires a much larger surface per unit of heat absorbed. In the larger hot-air engines, accordingly, the furnaces and heating surfaces gave great trouble. Very low maximum temperatures were attained in practice. In a Stirling engine giving out thirty-seven brake horse-power, the maximum temperature was only 343° C.; in the engines of the ship 'Ericsson,' the maximum was only about 212° C., according to Rankine, the indicated power being about 300 horses. These figures show that the heating surfaces were insufficient, as in both cases the furnaces were pushed to heat the metal to a good red. A method of internal firing was proposed, first by Sir George Cayley and afterwards carried out with some success by others; the furnace was contained in a completely closed vessel, and the air to be heated was forced through it before passing to the motor cylinder. The plan gave better results, but the temperature of 700° C. was still the limit, as the strength of the iron reservoir had to be considered, and the hot gases had to pass through valves. Wenham's engine, described in a paper read before the Institution of Mechanical Engineers in 1873, is a good example of this class. In it the highest temperature of the working fluid, as measured by a pyrometer, was 608° C.; higher temperatures could easily have been got but the safety of the engine did not permit it. Professor Rankine in his work on the steam engine has very fully discussed the disadvantages arising from low maximum temperatures. He calculates that in a perfect air engine without regenerator an average pressure of 8·3 lbs. per square inch would only be attained with a maximum of 216·6 lbs. per square inch, thus necessitating great strength of cylinder and working parts for a very small return in effective power. In the 'Ericsson,' the average effective pressure was less than this, being only about 2 lbs. per square inch; it had four air cylinders each of 14 feet diameter, and only indicated 300 horse-power. Stirling's motor cylinder did not give a true idea of the bulk of the engine, as the real air-displacer was separate. Even with Wenham's machine the bulk was excessive, an engine of 24 inches diameter cylinder and 12 inches stroke giving 4 horse-power.

Those facts sufficiently illustrate the practical difficulties which prevented the development of the hot-air engine proper. All flow from the method of heating. Low temperature is necessary to secure durability of the iron.

All hot-air engines are, therefore, very large and very heavy for the power they are capable of exerting.

The friction of the parts is so great that although the theoretical efficiency of the working fluid is higher than in the best steam engines, the practical efficiency or result per horse available for external work is not nearly so great. The best result ever claimed for Stirling's engine is 2·7 lbs. of coal per bk. horse-power per hour, probably under the truth, but even allowing it, a first class steam engine of to-day will do much better. According to Prof. Norton, the engines of the 'Ericsson' used 1·87 lbs. of anthracite per indicated horse-power per hour; but the friction must have been enormous. Compared with the steam engine, the practical disadvantages of the hot-air engine are much greater than its advantage of theory. Owing to the great inferiority of air to boiling water as a medium for the convection of heat, the efficiency of the furnace is much lower; owing to the high maximum and low available pressure, the friction is much greater—which disadvantages in practice more than extinguish the higher theoretical efficiency.

The gas engine method of heating by combustion or explosion at once disposes of those troubles; it not only widens the limits of the temperatures at command almost indefinitely, but the causes of failure with the old method become the very causes of success with the new method.

The difficulty of heating even the greatest masses of air is quite abolished. The rapidly moving flash of chemical action makes it easy to heat any mass, however great, in a minute fraction of a second; when once heated the comparatively gradual convection makes the cooling a very slow matter. The conductivity of air for heat is but slight, and both losing and receiving heat from enclosing walls are carried on by the process of convection, the larger the mass of air the smaller the cooling surface relatively. Therefore the larger the volumes of air used, the more economical the new method, the more difficult the old. The low conductivity for heat, the cause of great trouble in hot-air machines, becomes the unexpected cause of economy in gas engines. If air were a rapid carrier of heat, cold cylinder gas engines would be impossible. The loss to the sides of the enclosing cylinders would be so great that but little useful effect could be obtained. Even as it is, present loss from this cause is sufficiently heavy. In the earlier engines as much as three-fourths of the whole heat of the combustion was lost in this way; in the best modern engines so much as one-half is still lost.

A little consideration of what is occurring in the gas engine cylinder at each explosion will show that this is not surprising. Platinum, the most infusible of metals, melts at about 1700° C.; the ordinary temperature of cast iron flowing from a cupola is about 1200° C.; a temperature very usual in a gas engine cylinder is 1600° C., a dazzling white-heat. The whole of the gases filling the cylinder are at this high temperature. If one could see the interior it would appear to be filled with a blinding glare of light. This experiment the writer has tried by means of a small aperture covered with a heavy glass plate, carefully protected from the heat of the explosion by a long cold tube. On looking through this window while the engine is at work, a continuous glare of white light is observed. A look into the interior of a boiler furnace gives a good notion of the flame filling the cylinder of a gas engine.

At first sight it seems strange that such temperature can be used with impunity in a working cylinder; here the convenience of the method becomes evident. The heating being quite independent of the temperature of the walls of the cylinder, by the use of a water-jacket they can be kept at any desired temperature. The same property of rapid convection of heat, so useful for generating steam from water, is essential in the gas engine to keep the rubbing surfaces at a reasonable working temperature. In this there is no difficulty, and notwithstanding the high temperature of the gases, the metal itself never exceeds the boiling point of water.

So good a result cannot of course be obtained without careful proportioning of the cooling surfaces for the amount of heat to be carried away; in all modern engines this is carefully attended to, with the gratifying result that the cylinders take and retain a polished surface for years of work just as in a good steam engine.

The gas engine method gives the advantage of higher temperature of working fluid than is attainable in any other heat engine, at the same time the working cylinder metal may be kept as cool as in the steam engine. It also allows of any desired rate of heating the working fluid in any required volumes.

In consequence of high temperatures the available pressures are high, and therefore the bulk of the engine is small for the power obtained.

It realises all the thermodynamic advantages claimed for the hot-air engine without sacrificing the high available pressures and rapid rate of the generation of power which is the characteristic of the steam engine.

For rapid convection of heat existing in the steam boiler is substituted the still more rapid heating by explosion or combustion, a rapidity so superior that the power is generated for each stroke separately as required, there being no necessity to collect a great magazine of energy.

The only item to the debtor side of the gas engine account is the flow of heat through the cylinder walls, which disadvantage is far more than paid for by the advantages.

CHAPTER II.

GAS ENGINES CLASSIFIED.

ALTHOUGH the gas engine patents now in existence number many hundreds, the essential differences between the inventions are not great. In their working process they may be divided into a few well-defined types :

1. Engines igniting at constant volume, but without previous compression.

2. Engines igniting at constant pressure, with previous compression.

3. Engines igniting at constant volume, with previous compression.

THE FIRST TYPE is the simplest in idea ; it is the most apparent method of obtaining power from an explosion.

In it the engine draws into its cylinder gas and air at atmospheric pressure, for a part of its stroke, in proportions suitable for explosion ; then a valve closes the cylinder, and the mixture is ignited. The pressure produced pushes forward the piston for the remainder of its travel, and upon the return stroke the products of the combustion are expelled exactly as the exhaust of a steam engine. By repeating the same process on the other side of the piston, a kind of double-acting engine is obtained. It is not truly double-acting, as the motive impulse is not applied during the whole stroke, but only during that portion of it left free after performing the necessary function of charging with the explosive mixture.

The working cycle of the engine consists of four operations :

1. Charging the cylinder with explosive mixture.
2. Exploding the charge.
3. Expanding after explosion.
4. Expelling the burned gases.

To carry it out in a perfect manner, the mechanism must be so arranged that during the charging, the pressure of the gases in the cylinder does not fall below atmosphere ; there must be no throttling of the entering gases. The cut-off and the explosion must be absolutely simultaneous and also instantaneous, so that the heat may be applied without change of volume, and thereby produce the highest pressure which the mixture used is capable of giving. The expansion will be carried far enough to reduce the pressure of the explosion to atmosphere ; and the exhaust stroke will be accomplished without back pressure. The charge in entering must not be heated by the walls of the cylinder, but should remain at the temperature of the atmosphere till the very moment previous to ignition. At the same time, the cylinder should not cool the gases after the explosion, no heat should disappear except through expansion doing work.

Although all these conditions are necessary to the perfect cycle, it is evident that no actual engine is capable of combining them. Some throttling at the admission of the mixture, and a little back pressure during the exhausting are unavoidable ; some time must elapse between the closing of the inlet valve and the explosion, in addition to the time taken by the explosion itself. Heat will be communicated to the entering gases and lost by the exploded gases to the walls of the cylinder.

The actual diagram taken from an engine will therefore differ considerably from the theoretic one.

The theoretical conditions are to a great extent contradictory.

The idea of the type, however, is easily comprehensible, and evidently suggested by the common knowledge of the destructive effect of accidental coal gas explosions which occurred soon after the introduction of gas into general use. 'The power is there, let us use it like steam in the cylinder of a steam engine,' said the early inventors.

The two most successful engines of this type were Lenoir's and, later, Hugon's, for very small powers ranging from one man to half-horse. Simple forms of this type are still in extensive use. The most widely known of these is the Bisschof, a French invention.

THE SECOND TYPE is not so simple in its main idea, and required much greater knowledge of detail, both mechanical and theoretical. As a hot-air engine its theory was originally proposed by Sir Geo. Cayley, and, later, by Dr. Joule and Sir Wm. Thomson. As a hot-air engine it failed for the reasons discussed in the previous chapter.

In it the engine is provided with two cylinders of unequal capacity ; the smaller serves as a pump for receiving the charge and compressing it, the larger is the motor cylinder, in which the charge is expanded during ignition and subsequent to it.

The pump piston, in moving forward, takes in the charge at atmospheric pressure, in returning compresses it into an intermediate receiver, from which it passes into the motor cylinder in a compressed state. A contrivance similar to the wire gauze in a Davy lamp commands the passage between the receiver and the cylinder, and permits the mixture to be ignited on the cylinder side as it flows in without the flame passing back into the receiver.

The motor cylinder thus receives its working fluid in the state of flame, at a pressure equal to, but never greater than, the pressure of compression. At the proper time, the valve between the motor and the receiver is shut, and the piston expands the ignited gases till it reaches the end of its stroke, when the exhaust valve is opened, and the return expels the burned gases.

The ignition here does not increase the pressure, but increases the volume. The pump, say, puts one volume or cubic foot into the receiver ; the flame causes it to expand while entering the cylinder to two cubic feet. It does the work of two cubic feet in the motor cylinder, so that, though there is no increase of pressure, there is nevertheless an excess of power over that spent in compressing.

In the first type of engine the heat is given to the working fluid at constant volume, in the second type the heat is given to the working fluid at constant pressure during change of volume.

The working cycle of the engine consists of five operations :

1. Charging the pump cylinder with gas and air mixture.
2. Compressing the charge into an intermediate receiver.
3. Admitting the charge to the motor cylinder in the state of flame, at the pressure of compression.

4. Expanding after admission.
5. Expelling the burned gases.

To carry out the process perfectly the following conditions would be required.

No throttling during admission of the charge to the pump.

No heating of the charge as it enters the pump from the atmosphere.

No loss of the heat of compression to the pump and receiver walls.

No throttling as the charge enters the motor cylinder from the receiver.

No loss of heat by the flame to the sides of the motor cylinder and piston.

And last, No back pressure during the exhaust stroke.

The exhaust gases also must be completely expelled by the motor piston ; that is, the motor cylinder should have no clearance.

The requirements of this type, although sufficiently numerous and exacting, are not so contradictory among themselves as in the first.

Although every engine of the kind yet made fails to fulfil them, it is quite possible that a machine very closely approximating may be yet constructed.

The most successful engines of this kind have been Brayton's and Simon's, the first an American invention, and the second an English adaptation of it. Sir C. W. Siemens proposed such an engine in 1861, but does not seem to have been successful in carrying it out. In 1860 it was also proposed by F. Million, but without a sufficient understanding of the mechanical detail necessary for a working machine.

Brayton's engine was made in considerable numbers in America, and was applied by him to drive a good-sized launch, petroleum being used as the fuel instead of gas. It was exhibited at the Centennial Exhibition in Philadelphia ; at the Paris exhibition of 1878 by Simon.

THE THIRD TYPE is the best kind of compression engine yet introduced ; by far the largest number of gas engines in every day use throughout the world are made in accordance with its requirements. In theory it is more easily understood as requiring two cylinders, compression and power.

The leading idea, compression and ignition at constant volume, was first proposed by Barnett in 1838, then by Schmidt in more general terms, very fully by Beau de Rochas in 1860 and also by F. Million in the same year. Otto, however, was the first to successfully apply it, which he did in 1876.

The compression cylinder may be supposed to take in the charge of gas and air at atmospheric temperature and pressure; compress it into a receiver from which the motor cylinder is supplied; the motor piston to take in its charge from the reservoir in a compressed state; and then communication to be cut off and the compressed charge ignited.

Here ignition is supposed to occur at constant volume, that is, the whole volume of mixture is first introduced and then fired; the pressure therefore increases. The power is obtained by igniting while the volume remains stationary and the pressure increases.

Under the pressure so produced, the piston completes its stroke, and upon the return stroke the products of the combustion are expelled.

In this case the working cycle of the engine consists of six operations:

1. Charging the pump cylinder with gas and air mixture.
2. Compressing the charge into an intermediate receiver.
3. Admitting the charge to the motor cylinder under compression.
4. Igniting the mixture after admission to the motor.
5. Expanding the hot gases after ignition.
6. Expelling the burned gases.

To carry out the process perfectly, similar conditions are necessary to those in the second type. But the conditions are more contradictory. The gases entering the cylinder under pressure must not be heated by its walls; no heat should be added till the ignition; then, after ignition the gases must not lose heat to the cylinder—conditions which it is impossible for the same cylinder to fulfil simultaneously.

In the engines constructed the receiver is dispensed with, for reasons which will be explained in discussing the practical difficulties of construction; but this does not in any way modify the theory, which shall first be discussed.

The most considerably used engine of this kind is the Otto, next to it coming Clerk's engine, then Robson's by the Messrs. Tangye, and Andrews' Stockport compression engine. In none of these types does any part of the working cycle require either the heating or the cooling of the working fluid by the relatively slow processes of convection and conduction.

Heating is accomplished by the rapid method of explosion or, if the term be preferred, combustion, and for the cooling necessary in all heat engines is substituted the complete rejection of the working fluid with the heat it contains and its replacement by a fresh portion taken from the atmosphere at the atmospheric temperature, which is the lower limit of the engines.

This is the reason why those cycles can be repeated with almost indefinite rapidity, and why gas engines can be run at speeds equal to steam engines, while the old hot-air engines could not be run fast, because of the very slow rate at which air could be heated and cooled by contact.

There still remains one important type of gas engine not included in this classification; in it part of the efficiency is dependent on cooling by contact, and consequently only a slow rate of working stroke can be obtained. It is the kind of engine known as the free piston or atmospheric gas engine. It may be regarded as a modification of the first type. The first part of its action is precisely similar, the latter part differs considerably.

It may be called *Type* ONE A. In it the piston moves forward, taking in its charge of gas and air from the atmosphere at the atmospheric pressure and temperature. When cut off it is ignited instantaneously, the volume being constant and the pressure increasing; the piston is not connected directly to the motor shaft, but is free to move under the pressure of the explosion, like the ball in a cannon. It is shot forward in the cylinder (which is made purposely very long); the energy of the explosion gives the piston velocity; it therefore continues to move considerably after the pressure has fallen by expansion to atmosphere; a partial vacuum forms under the piston till its whole energy of motion is absorbed in doing work upon the exterior air. It then stops, and the external pressure causes it to perform its instroke, during which a clutch arrangement yokes it to the motor shaft, giving the shaft an impulse. The explosion is made to give its equivalent in work upon the external air, in forming a vacuum in fact; the vacuum is increased by the cooling of the hot gases during the return of the piston. The piston proceeds completely to the bottom of the cylinder, expelling the products of combustion. So far as the working fluid of the engine is concerned the cycle consists of five operations:

1. Charging the cylinder with explosive mixture.
2. Exploding the charge.
3. Expanding after explosion.
4. Compressing the burned gases after some cooling.
5. Expelling the burned gases.

To carry it out perfectly, in addition to the requirements of the first type, the expansion should be carried far enough to lower the temperature of the working fluid to the temperature of the atmosphere, and the compression to atmospheric pressure again should be conducted at that temperature; that is, the compression line should be an isothermal.

This kind of engine was proposed first by Barsanti and Matteucci in 1854, by F. H. Wenham in 1864, and then by Otto and Langen in 1866. The last named inventors were successful in overcoming the practical difficulties, and many engines were made and sold by them. Their engine, although cumbrous and noisy, was a good and economical worker; many are still in use. The next best known engine of the kind was Gillies's, of which a considerable number were constructed and sold.

CHAPTER III.

THERMODYNAMICS OF THE GAS ENGINE.

BEGINNING with Professor Rankine, able writers have so fully treated the thermodynamics of the air engine that but little can be added to the knowledge of the subject now in existence. The gas engine method of heating, however, introduces limits of temperature so extended and cycles of action so different from those possible in the air engine proper, that something remains to be done in applying the existing data. So far as the author is aware, this has been previously attempted by three writers only—Prof. R. Schöttler, Dr. A. Witz, and himself.

Before proceeding with the special consideration of the subject, it is advisable for the sake of completeness to state briefly the general laws. In doing so Rankine will be followed as closely as possible.

THERMODYNAMICS DEFINED.

'It is a matter of ordinary observation that heat, by expanding bodies, is a source of mechanical energy, and conversely, that mechanical energy, being expended either in compressing bodies or in friction, is a source of heat.

'The reduction of the laws according to which such phenomena take place to a physical theory or connected system of principles constitutes what is called the science of thermodynamics.'

FIRST LAW OF THERMODYNAMICS.

Heat and mechanical energy are mutually convertible, and heat requires for its production, and produces by its disappearance, mechanical energy in the proportion of 1,390 footpounds for each centigrade heat unit, a heat unit being the amount of heat necessary to heat one pound weight of water through 1° C. This is Joule's law, having been first determined by him in 1843. It holds with equal truth for other forms of energy, and is a general statement of the great truth, that in the universe, energy is as incapable of creation or destruction as matter. Energy may change its form indefinitely while passing from a higher to a lower level, but it can neither be created nor destroyed. The energy of outward and visible movement of matter may be arrested and caused to disappear as movement of the whole mass in one direction, but its equivalent reappears as internal movement or agitation of the particles or molecules composing the body. Energy assumes many forms, but the sum of all remains a constant quantity, incapable of change of quantity, but capable of disappearing in one form and reappearing in another.

SECOND LAW OF THERMODYNAMICS.

Although heat and work are mutually convertible and in definite and invariable proportions, yet no conceivable heat engine is able to convert all the heat given to it into work.

Apart altogether from practical limitations, a certain portion of the heat must be passed from the hot body to the cold body in order that the remainder may assume the form of mechanical energy. To get a continuous supply of mechanical energy from heat depends upon getting a continuous supply of hot and cold substances : it is by the alternate expansion and contraction of some substance, usually steam or air, that heat is converted into mechanical energy.

Perfect heat engines are ideal conceptions of machines which are practically impossible, but whose operations are so arranged that, if possible, they would convert the greatest conceivable proportion of the heat given to them into mechanical work.

Efficiency.—The efficiency of a heat engine is the ratio of the heat converted into mechanical work to the total amount of heat which enters the engine.

In this work the word *Efficiency*, when used without qualification, bears this meaning only.

The efficiency of a perfect heat engine depends upon two things alone : these are, the temperature of the source of heat and the temperature of the source of cold (allowing the expression). The greater the difference between these temperatures the greater the efficiency. That is, the greater will be the proportion of the total heat converted into mechanical energy, and the smaller the proportion of the total heat which necessarily passes by conduction from the hot to the cold body.

Properties of Gases.—Gases are the most suitable bodies for use in heat engines ; they are almost perfectly elastic, and they expand largely under the influence of heat.

A gas is said to be perfect when it completely obeys two laws :

1. Boyle's law.
2. Charles's law.

Boyle's Law.—Suppose unit volume of gas to be contained in a cylinder fitted with a piston which is perfectly tight at unit pressure. Suppose the temperature to be kept perfectly constant. Then, according to Boyle's law, however the volume may be changed by moving the piston, the pressure is always inversely proportional to volume, that is, if volume becomes two, pressure becomes one-half ; volume becomes three, pressure becomes one-third.

The product of pressure and volume is always constant.

Denoting pressure by p, and volume by v,

Boyle's law is, $p\,v =$ constant.

Charles's Law.—If a gas kept at constant volume is heated, the pressure increases. If a gas is kept behind a piston which moves without friction so that the pressure upon the gas is always constant, the heat applied will cause it to expand.

One volume of gas at 0° C., if heated through 1° C. will expand $\frac{1}{273}$, and become $1\frac{1}{273}$ volume, if the pressure is constant. If the volume is constant, then its pressure will increase by $\frac{1}{273}$, that is, its pressure will become $1\frac{1}{273}$ of the original. In the same way if cooled 1° C. below 0° C., it will contract or diminish in pressure by $\frac{1}{273}$, its volume or pressure becoming $\frac{272}{273}$ of what it is at 0° C.

For every degree of heat or cold above or below 0° C. a perfect gas expands or contracts by $\frac{1}{273}$ of its volume at 0° C.

From this it is evident that a perfect gas, if cooled to 273° C. below 0° C. will have neither volume nor pressure.

This originally gave rise to the conception of absolute zero of temperature. The absolute temperature of a body is ordinary temperature Centigrade + 273, just as the absolute pressure of any gas is its pressure above atmosphere plus atmospheric pressure. The absolute temperature of a body is its temperature above Centigrade zero + 273.

The pressure or volume of a gas is therefore directly proportional to its absolute temperature.

If p=pressure for absolute temperature t, and p^1 pressure for t^1 temperature, also absolute,

$$\text{then} \qquad \frac{p}{p^1} = \frac{t}{t^1};$$

or if v be the volume at absolute temperature t and v^1 at t^1,

$$\text{then} \qquad \frac{v}{v^1} = \frac{t}{t^1},$$

The Second Law (*quantitative*).—If heat be supplied to a perfect heat engine at the absolute temperature T^1, and the absolute temperature of the source of cold is T, then the efficiency of that engine is, denoting it by E,

$$E = \frac{T^1 - T}{T^1} = 1 - \frac{T}{T^1}.$$

It is unity minus the lower temperature divided by the upper temperature. The efficiency is greater or less as the fraction $\frac{T}{T^1}$ is less or greater. This fraction may be diminished either by reducing T or by increasing T^1. The lowest available temperature is not capable of great variation, being in our climate about 290° absolute. It therefore follows that efficiency could only be increased by increasing T^1.

Suppose $T=290°$ absolute and $T^1=580°$ absolute.

$$\text{Then} \qquad E = 1 - \tfrac{290}{580} = 1 - \tfrac{1}{2} = 0{\cdot}5.$$

Suppose $T=290°$, and $T^1=1450°$, a temperature common in gas engines, then

$$E = 1 - \tfrac{290}{1450} = 1 - \tfrac{1}{5} = 0{\cdot}8.$$

The efficiency increases with increase of the maximum temperature. The second law, in its quantitative form, is the statement of the efficiency of any perfect heat engine in terms of absolute temperatures of the source of heat and the source of cold.

Thermal Lines.—If a volume of air is contained in a cylinder having a piston and fitted with an indicator, the piston, if moved to and fro, will alternately compress and expand the air, and the indicator pencil will trace a line or lines upon the card, which lines register the change of pressure and volume occurring in the cylinder. If the piston is perfectly free from leakage, and it be supposed that the temperature of the air is kept quite constant, then the line so traced is called an *Isothermal line*, and the pressure at any point when multiplied by the volume is a constant according to Boyle's law,

$$pv = \text{a constant.}$$

If, however, the piston is moved in very rapidly, the air will not remain at constant temperature, but the temperature will increase because work has been done upon the air, and the heat has no time to escape by conduction. If no heat whatever is lost by any cause, the line will be traced over and over again by the indicator pencil, the cooling by expansion doing work precisely equalling the heating by compression. This is the line of no transmission of heat, therefore, known as *Adiabatic*. Fig. 10 shows these two

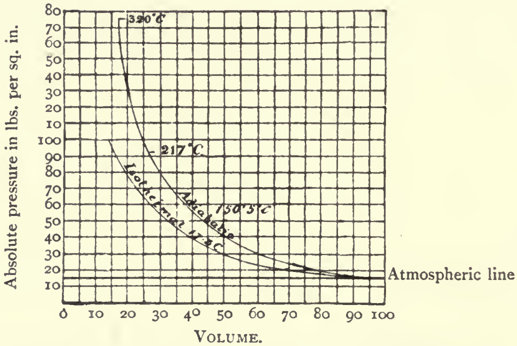

Compression lines for air (dry), Adiabatic and Isothermal.

Fig. 10.

lines for air starting from atmospheric pressure and temperature.

The pressures at different points of the curve are related by the equation

$$pv^y = \text{constant.}$$

The pressure when multiplied by the volume raised to the y power is always constant.

The power y is the ratio between the specific heat of the air at constant pressure and its specific heat at constant volume. According to Rankine

$$y = 1{\cdot}408 \text{ for air.}$$

Imperfect Heat Engines.—For a complete description of the working cycle of perfect heat engines, the reader is referred to works upon the steam engine, which contain the fullest possible details both of reasoning and results.

The working cycles of practicable heat engines are always imperfect, that is, the operations are such that, although perfectly carried out, the maximum efficiency possible by the second law of thermodynamics could not be attained by them. Each cycle has a maximum efficiency peculiar to itself, which is invariably less than $\frac{T^1 - T}{T^1}$, but which does not necessarily vary with T^1 and T.

It does not always follow that increase of the higher temperature causes increase of efficiency; conversely, it does not always follow that diminution of the upper temperature causes diminution of efficiency. Under some circumstances, indeed, the opposite effect is produced—increase of the upper temperature diminishes efficiency, while its diminution increases it, of course within certain limits.

All the gas engine cycles described in the previous chapter are imperfect in this sense, but all are practicable. It follows that if any one of them gives a higher efficiency than another in theory, it will also do so in practice, provided the practical losses do not increase with improved theory.

It is necessary before discussing the practical losses to see how the cycles compare with each other, if each be perfectly carried out. The results obtained can then be modified by examination of the way in which unavoidable practical losses affect each cycle.

EFFICIENCY FORMULÆ.

If H is the quantity of heat given to an engine, and H^1 the amount of heat discharged by it after performing work, then, the portion which has disappeared in performing work is $H - H^1$, supposing no loss of heat by conduction or other cause,.and the efficiency of the engine is

$$E = \frac{H - H^1}{H}$$

Type I.—A perfect indicator diagram of an engine of this kind is shown at fig. 11: the line *a b c* is the atmospheric line, representing volume swept by the piston, the line *a d* is the line of pressures. From *a* to *b* the piston moves forward, taking in its charge, at atmospheric temperature and pressure; at *b* communication is instantaneously cut off, and heat instantaneously supplied, raising the temperature to the maximum, before the movement of the piston has time to change the volume. From *e*, the point of maximum temperature and pressure, the gases expand without loss of heat, the temperature only falling by reason of work performed till the pressure again reaches atmosphere. The curve *e c* is therefore adiabatic. In all cases let

t be the initial temperature of the air in absolute degrees Centigrade.
T the absolute temperature after explosion or heating.
T^1 the absolute temperature of the gases after adiabatic expansion.
p the atmospheric pressure.
P_0 the absolute pressure of the explosion.
v_o the volume at atmospheric temperature and pressure.
v the volume at the termination of adiabatic expansion.

In the particular case of diagram fig. 11, where the expansion is continued to the atmospheric line, the formula expressing the efficiency is very simple. Calling K_v the specific heat of air at constant volume, and K_p the sp. heat at constant pressure, then the heat supplied to the engine is

$$H = K_v(T - t),$$

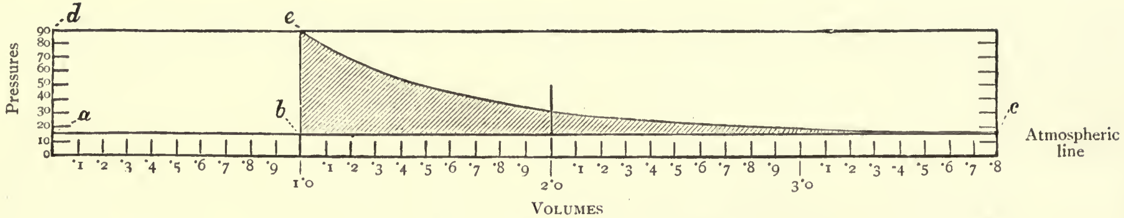

t absolute temp. °C. at	b	p absolute pressure at	b
T ,, ,,	e	p_o ,, ,,	c
T¹ ,, ,,	c	P_o ,, ,,	e
		v_o volume at	b
		v ,,	c

FIG. 11.—Type I. Perfect diagram. Complete expansion.

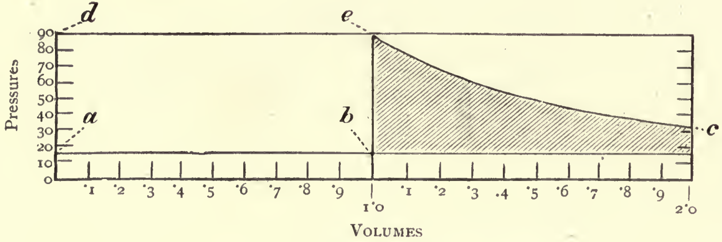

t absolute temp. °C. at	b	p absolute pressure at	b
		p_o ,, ,,	c
T ,, ,,	e	P_o ,, ,,	e
T¹ ,, ,,	c	v_o volume at	b
		v ,,	c

FIG. 12.—Type I. Perfect diagram. Incomplete expansion.

and the heat discharged from it is

$$H^1 = K_p(T^1 - t)\,;$$

therefore efficiency is

$$E = \frac{K_v(T - t) - K_p(T^1 - t)}{K_v(T - t)},$$

and $\frac{K_p}{K_v} = y$

therefore $$E = 1 - y\left(\frac{T^1 - t}{T - t}\right). \qquad (1)$$

It is evident that for every value of T there is a corresponding value of T^1, which increases with the increase of T. If T^1 is known in terms of T, then the calculation of efficiency is very rapid, as all that is required is a knowledge of the maximum temperature of the explosion to calculate the efficiency of an engine using that maximum temperature, and perfectly fulfilling this cycle.

For any adiabatic curve, the pressure multiplied by volume which has been raised to the yth power is a constant; therefore

$$P_o\, v_o^y = p_o v^y \text{ (see diagram, fig. 11)}, \qquad (a)$$

and $\frac{T}{t} = \frac{P_o}{p}$ which, as $p = p_o$, is the same as $\frac{P_o}{p_o}$;

also $\frac{v}{v_o} = \frac{T^1}{t}$.

∴ in equation (a) T may be substituted for P_o, t for p_o, t for v_o, and T^1 for v, giving

$$T\, t^y = t\, T^{1y}$$

$$T^1 = t\left(\frac{T}{t}\right)^{\frac{1}{y}} \qquad (2)$$

In most engines of this type the expansion is not great enough to reduce the pressure to atmosphere before opening the exhaust valve; it is therefore necessary to give formulæ where the best condition is not carried out. Fig. 12 is a diagram of a case of this kind.

The pressure at the termination of the stroke has fallen to p_o, and the temperature to T^1. The heat supplied to the engine is the same as in the first case

$$H = K_v\,(T - t).$$

The heat discharged by it cannot be so simply expressed. Suppose the hot gases at the pressure p_o to be allowed to cool by contact with the sides of the cylinder at constant volume till the atmospheric pressure p is reached, then the temperature

$$t^1 = T^1\,\frac{p}{p_o},$$

or in terms of volume and t $\qquad t^1 = \frac{v}{v_o}\,t,$

and the heat lost is $\qquad K_v\,(T^1 - t^1).$

The heat to be still abstracted before the air returns to its original condition at t, and pressure p is

$$K_p\,(t^1 - t).$$

Total heat discharged by exhaust, therefore,

$$H^1 = K_v\,(T^1 - t^1) + K_p\,(t^1 - t).$$

The efficiency consequently is

$$E = \frac{K_v(T - t) - \{K_v\,(T^1 - t^1) + K_p\,(t^1 - t)\}}{K_v\,(T - t)}$$

$$= 1 - \frac{(T^1 - t^1) + y(t^1 - t)}{T - t} \qquad (3)$$

In this case there is no fixed relationship between T the temperature of the explosion, and T^1 the temperature of the gases at the termination of adiabatic expansion. As the expansion is more or less complete, so does T and T^1 change. In no case, however, can the efficiency be so great as that in the first case.

Type 2.—A perfect indicated diagram of an engine of this type is shown at fig. 13. Although the cycle requires two cylinders, producing two diagrams, they are better compared when superposed. The whole diagram may be supposed to come from the motor cylinder, the shaded portion of it representing the available work of the cycle, and the unshaded part, the part done by the compressing pump. The atmospheric line is *a b c*. The pump volume is *a b*, the motor volume is *a c*. The pump takes in the volume *a b* at atmospheric pressure ; it compresses it into an intermediate receiver, the compression line (adiabatic) is bf, passing into receiver, line fe. From the receiver it enters the cylinder at the constant pressure of compression on the line efg, supply of heat cut off at g. Then expansion (adiabatic) to the point c atmospheric pressure. The part $bfgc$ is the part available for work, the part $bfea$ representing the work of the compressing pump, which is deducted from the total motor cylinder, diagram $aegc$.

The total volume of air passed through the pump is v_o, volume swept by motor cylinder, v. So far as the heat operations are concerned, the part of the diagram to volume v_c may be disregarded ; it represents the pressing of the compressed charge into the reservoir after reaching the maximum pressure of compression (it is called v_c because it is volume of compression). The admission to the motor cylinder is identical, so that work done in pump in that part equals work done upon the motor piston.

In addition to the letters used in type 1,

v_c is volume of compression.
v_p volume at point g on diagram.
p_c is pressure of compression.
t_c is temperature of compression.

The temperature, volume, and pressure letters are figured below the diagram to make matters clear. Compression is carried on from volume v_o at atmospheric pressure and temperature to volume v_c at pressure p_c and temperature t_c, the curve being adiabatic.

After compression, heat is added without allowing the pressure to increase, but the piston moves out till the maximum temperature T is attained, and the supply of heat being completely cut off, adiabatic expansion follows till the atmospheric pressure is reached ; the exhaust valve is then opened, and the hot gases discharged.

It is evident that as the pressure is constant, while heat is being given, the amount of heat given to the engine in all is

$$H = K_p (T - t_c),$$

and the heat discharged from it is also at constant pressure,

$$H^1 = K_p (T^1 - t).$$

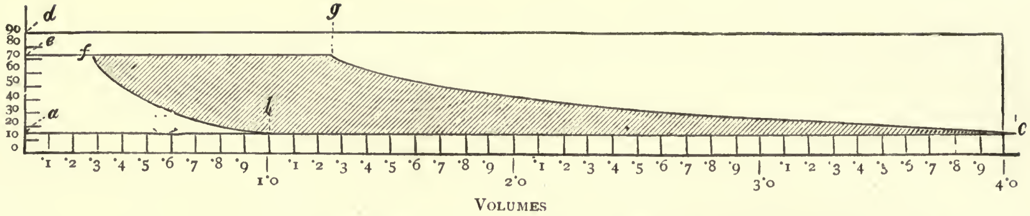

t	absolute temp. °C. at		b	p	absolute pressure at		b
tc	,,	,,	f	po	,,	,,	c
T	,,	,,	g	pc	,,	,,	f
T^1	,,	,,	c	vo	volume at		b
				v	,,		c
				vc	,,		f
				vp	,,		g

FIG. 13.—Type 2. Perfect diagram. Complete expansion.

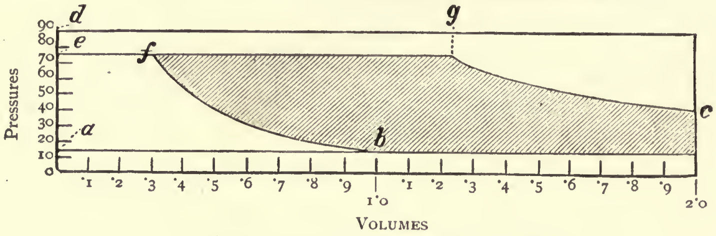

t	absolute temp. °C. at		b	p	absolute pressure at		b
tc	,,	,,	f	p_o	,,	,,	c
T	,,	,,	g	pc	,,	,,	f
T^1	,,	,,	c	vo	volume at		b
				v			c
				vc	,,		f
				vp	,,		g

FIG. 14.—Type 2. Perfect diagram. Incomplete expansion.

The efficiency is therefore

$$\text{E} = \frac{\text{K}_p(\text{T} - t_c) - \text{K}_p(\text{T}^1 - t)}{\text{K}_p(\text{T} - t_c)}$$

$$= 1 - \frac{\text{T}^1 - t}{\text{T} - t_c} \qquad (4)$$

The compression and expansion curves being adiabatic,

$$\text{Compression } p_c v_c^y = p v_o^y,$$

$$\text{Expansion } p_c v_p^y = p_o v^y;$$

$$\therefore \quad \frac{v_c^y}{v_p^y} = \frac{p v_o^y}{p_o v^y}, \text{ but } p_o = p,$$

$$\text{so that } \frac{v_c^y}{v_p^y} = \frac{v_o^y}{v^y} \qquad \text{(a)}$$

$$\text{and } \frac{v_c}{v_p} = \frac{t_c}{\text{T}}, \text{ also } \frac{v_o}{v} = \frac{t}{\text{T}^1}.$$

Substituting in equation (a)

$$\frac{t_c}{\text{T}} = \frac{t}{\text{T}^1},$$

$$\text{and } \frac{\text{T}^1}{\text{T}} = \frac{t}{t_c}.$$

As the efficiency is

$$\text{E} = 1 - \frac{\text{T}^1 - t}{\text{T} - t_c},$$

$$\text{it may be either} = 1 - \frac{\text{T}^1}{\text{T}} \text{ or} = 1 - \frac{t}{t_c} \qquad (5)$$

That is, when expansion is carried to the same pressure as existed before compression, the efficiency depends upon the compression alone, t being the temperature before compression, and t_c the temperature of compression. The efficiency being $1 - \frac{t}{t_c}$, the greater the temperature t_c the less is the fraction $\frac{t}{t_c}$, and the more nearly does E approach unity.

In most working engines of this kind, the expansion is not continued long enough to make the pressure after expanding fall to atmosphere ; so that the efficiency is never so great, as when that is done, a greater portion of the heat is discharged than need be.

The modification of the formulæ is precisely as in type 1 for similar circumstances. A diagram of the kind is shown at fig. 14. The temperature t^1 is found as before:

$$t^1 = T^1 \frac{p}{p_o}.$$

The heat supplied to the cycle is as before:

$$H = K_p (T - t_c),$$

and the heat discharged is

$$H^1 = K_v (T^1 - t^1) + K_p (t^1 - t).$$

The efficiency is

$$E = 1 - \frac{\frac{1}{y}(T^1 - t^1) + (t^1 - t)}{T - t_c}. \qquad (6)$$

Although there is no fixed proportion between the efficiency and the temperature of adiabatic compression, it is evident that E increases with increase of t_c.

Type 3.—A perfect indicator diagram of an engine of this type is shown at fig. 15. As in type 2, the diagrams of pump and motor are combined, the whole diagram being that given in the motor cylinder, but the shaded portion only represents the available work. The atmospheric line is *a b c*. The pump volume is *a b*, the motor cylinder volume is *a c*. The pump takes in the volume *a b* at atmospheric pressure, compresses it on the adiabatic line *b f* and into a receiver on the line *f g*. The compressed gases enter the motor cylinder on the line *g f*, heat is added instantaneously, and the pressure rises on the line *f e*. Supply of heat cut off at *e* and the expansion line *e c* is adiabatic. The total diagram in the motor cylinder is *a g f e c*, but the portion *a g f b* is common to motor and pump; the available work is therefore *b f e c*.

The total volume of air passed through the pump is v_o; the volume after adiabatic compression, from atmospheric pressure p and temperature t to pressure of compression p_c and temperature t_c, is v_c. Heat is supplied at constant volume v_c till the maximum temperature of the explosion T is attained. The piston then expands the hot gases adiabatically from temperature T to T^1 and pressure P_o to pressure p_o, which in this case is equal to atmosphere.

The heat is discharged in passing from volume v to v_o at constant pressure of atmosphere. The part of the diagram from volume v_c to zero may be disregarded as it is common to both pump and motor.

The heat supplied to the cycle is

$$H = K_v (T - t_c).$$

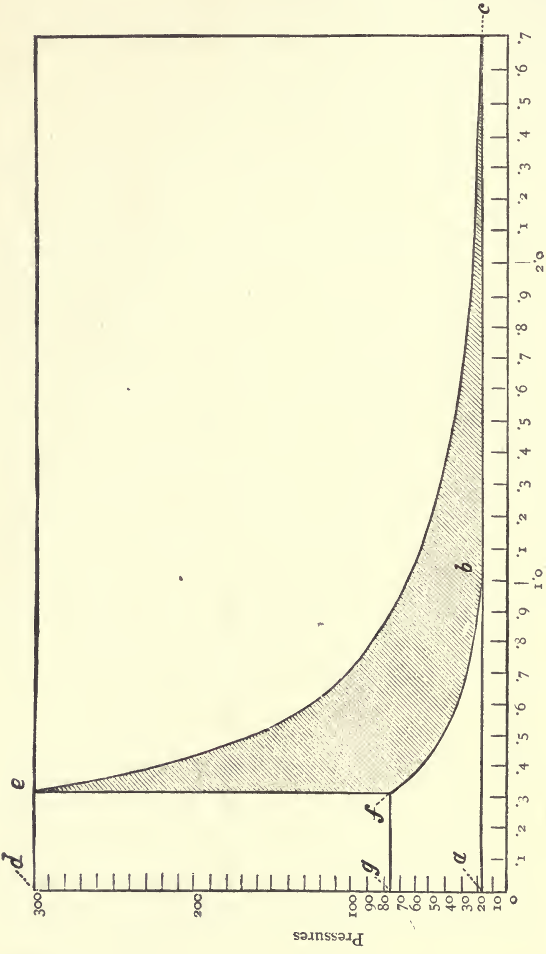

t	absolute temp. °C. at		b	p	absolute pressure at		b
tc	,,	,,	f	po	,,	,,	c
				pc	,,	,,	f
				Po	,,	,,	e
T	,,	,,	e	vo	volume at		b
T¹	,,	,,	c	v	,,		c
				vc	,,		f

FIG. 15.—Type 3. Perfect diagram. Complete expansion.

Heat discharged

$$H^1 = K_p \ (T^1 - t).$$

The efficiency is

$$E = \frac{K_v (T - t_c) - K_p (T^1 - t)}{K_v (T - t_c)}$$

$$= 1 - \gamma \frac{T^1 - t}{T - t_c}. \qquad (7)$$

It is evident that for any maximum temperature T and compression temperature t_c there is a temperature T^1 at which the expansion adiabatic line falls to atmosphere. It will much simplify subsequent calculations to establish the relations between T, t_c, t and T^1.

$P_o v_c^\gamma = p_o v^\gamma$ and $p_c v_c^\gamma = p v_o^\gamma$ and as $p_o = p$,

$$\frac{P_o}{p_c} = \frac{v^\gamma}{v_o^\gamma}$$

but $$\frac{v}{v_o} = \frac{T^1}{t} \text{ so that } \frac{P_o}{p_c} = \frac{T^{1\gamma}}{t^\gamma}$$

and $$\frac{P_o}{p_c} = \frac{T}{t_c} \text{ so that } \frac{T}{t_c} = \left(\frac{T^1}{t}\right)^\gamma.$$

T^1 in terms of T, t_c and t is therefore

$$T^1 = t \left(\frac{T}{t_c}\right)^{\frac{1}{\gamma}}. \qquad (8)$$

Although this is the best case for the third type it is not the one commonly occurring in practice; no engine has as yet been arranged to expand the gases after explosion to the atmospheric pressure.

Fig. 16 is a perfect diagram of the most common case, namely, when the expansion is carried only so far that the heat is discharged when the volume is the same as that existing before compression. The formula of efficiency is exceedingly simple, and leads to a very apparent and nevertheless somewhat paradoxical result.

The heat supplied to the cycle is

$$H = K_v \ (T - t_c),$$

and the heat discharged is

$$H^1 = K_v \ (T^1 - t),$$

because the volume of the air is the same as that existing before compression, and therefore the heat necessary to bring the fluid back to its original state can be abstracted at constant volume.

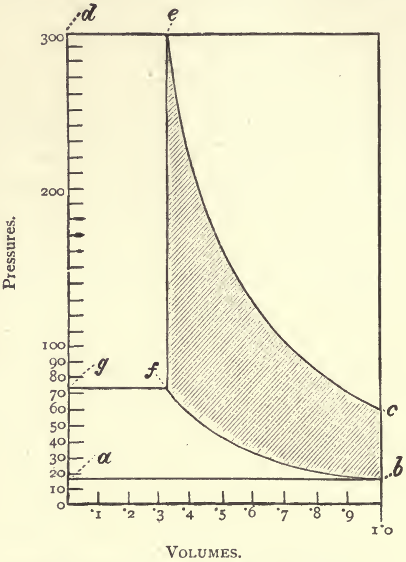

t absolute temp. °C. at b
t_c ,, ,, f
T ,, ,, e
T^1 ,, ,, c

p absolute pressure at b
p_c ,, ,, f
P_o ,, ,, e
v_o volume at b
v ,, c
v_c ,, f

Here $v_o = v$.

FIG. 16.

Type 3. Perfect diagram. Expansion to same vol. as before compression.

The efficiency is

$$E = \frac{K_v\,(T - t_c) - K_v\,(T^1 - t)}{K_v\,(T - t_c)}.$$

$$= 1 - \frac{T^1 - t}{T - t_c} \qquad (9)$$

As both curves are adiabatic, and pass through the same volume change,

$$\frac{T^1}{T} = \frac{t}{t_c};$$

so that
$$\frac{T^1 - t}{T - t_c} = \frac{T^1}{T} = \frac{t}{t_c}.$$

The efficiency may therefore be expressed

$$E = 1 - \frac{T^1}{T} \quad \text{or } 1 - \frac{t}{t_c} \qquad (10)$$

$$\text{or} \qquad 1 - \left(\frac{v_c}{v_o}\right)^{y-1}.$$

That is, the efficiency depends upon the ratio between the initial temperature and the temperature of adiabatic compression only. T, the temperature of explosion, may be any value greater than t_c, without either increasing or diminishing the efficiency. In this case

$$T^1 = \frac{Tt}{t_c}.$$

There is still another case of this type of cycle to be considered, when the expansion is continued beyond the original volume before compression, but not carried far enough to reach atmospheric pressure. Fig. 17 is a diagram of the kind.

The heat supplied to the cycle is still

$$H = K_v (T - t_c).$$

The heat discharged may be found as in a similar case with types 1 and 2.

Total heat discharged is

$$H^1 = K_v (T^1 - t^1) + K_p (t^1 - t).$$

The efficiency is

$$E = \frac{K_v (T - t_c) - \{K_v (T^1 - t^1) + K_p (t^1 - t)\}}{K_v (T - t_c)}$$

$$= 1 - \frac{(T^1 - t^1) + y (t^1 - t)}{T - t_c}. \qquad (11)$$

Here then is no constant relationship between T^1 and T; the value of the cycle lies between cases 1st and 2nd.. The efficiency is less than in the first case, but greater than in the second.

Type 1 A.—In this type of engine the efficiency cannot be stated in terms of temperature directly because of the nature of the perfect cycle.

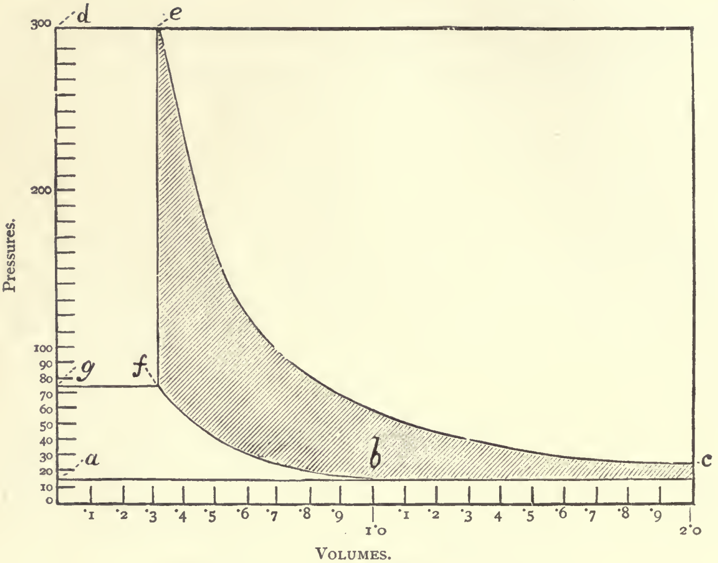

t	absolute temp. °C. at *b*	*p*	absolute pressure at *b*
tc	,, ,, *f*	*pc*	,, ,, *f*
		Po	,, ,, *e*
T	,, ,, *e*	*vo*	volume at *b*
T¹	,, ,, *c*	*v*	,, *c*
		vc	,, *f*

FIG. 17.—Type 3. Perfect diagram. Incomplete expansion.

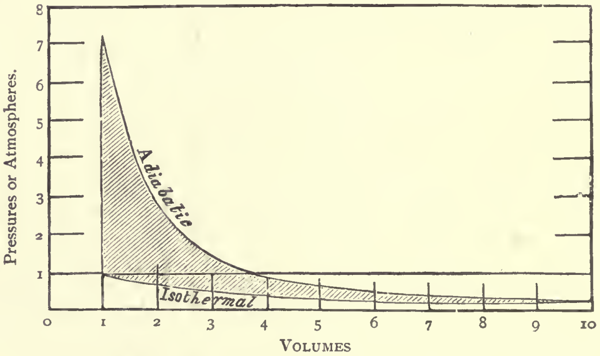

FIG. 18.—Type 1A. Perfect diagram. Limited expansion.

The expansion line is adiabatic, and the compression line whereby all the heat is discharged is isothermal.[1]

Fig. 18 is the theoretical diagram of such an engine. The scale is altered from previous diagrams because of the great expansion.

There is no compression previous to the addition of heat, the heat is added at constant volume v_o, which is the volume of the charge. The pressure rises with the temperature from atmospheric pressure p and temperature t to maximum pressure P_o and temperature T. From T the expansion line is adiabatic, and is continued far enough to reduce the temperature again to t. The piston then returns, compressing the gases at the temperature t till the original volume v_o and pressure p are attained.

For any two temperatures t and T there is evidently a constant relationship between the available work and work discharged as heat. As in expanding from highest to lowest temperature the temperature falls from T to t, the whole area of the diagram $T v_o v t$, may be taken as the heat supplied to the cycle.

The heat rejected is discharged at constant temperature t, and is equivalent to the area $v_o v t t$.

For any adiabatic curve the area $T v_o v t$ is

$$\text{area} = \frac{1}{y-1}(P_o v_o - p_o v). \tag{12}$$

For any isothermal

$$\text{area } v_o v t t = p v_o \text{ Log. } \epsilon \frac{v}{v_o}. \tag{13}$$

The efficiency is therefore—

$$E = \frac{\frac{1}{y-1}\left(P_o v_o - p_o v\right) - \left(p v_o \text{ Log. } \epsilon \frac{v}{v_o}\right)}{\frac{1}{y-1}(P_o v_o - p_o v)}$$

$$= 1 - \frac{(y-1)\left(p v_o \text{ Log. } \epsilon \frac{v}{v_o}\right)}{P_o v_o - p_o v} \tag{14}$$

---

[1] In Dr. A. Witz's able work, *Études sur les moteurs à gaz tonnant,* he falls into the error of supposing both expanding and compression lines of this type adiabatic, and he accordingly greatly over-estimates the efficiency proper to it.

but, as the line of compression discharging heat is an isothermal, that is, the temperature is kept constant at t during compression from the lowest pressure to atmosphere,

$$pv_o = p_o v \text{ (Boyle's law).}$$

The efficiency may therefore be written

$$\text{E} = 1 - \frac{(y-1)\left(pv_o \,\text{Log.}_{\epsilon} \dfrac{v}{v_o}\right)}{\text{P}_o v_o - pv_o}$$

$$= 1 - \frac{(y-1)\,p\,\text{Log.}_{\epsilon} \dfrac{v}{v_o}}{\text{P}_o - p};$$

then $$\frac{\text{T}}{t} = \frac{\text{P}_o}{p} = \left(\frac{v}{v_o}\right)^{y-1} \therefore \frac{v}{v_o} = \left(\frac{\text{T}}{t}\right)^{\frac{1}{y-1}}.$$

The efficiency can therefore be given entirely in terms of T and t:

$$\text{E} = 1 - \frac{(y-1)\,t\,\text{Log.}_{\epsilon}\left(\dfrac{\text{T}}{t}\right)^{\frac{1}{y-1}}}{\text{T} - t} = 1 - \frac{t\,\text{Log.}_{\epsilon}\dfrac{\text{T}}{t}}{\text{T} - t}. \qquad (15)$$

In the case where the expansion is not carried far enough to bring the temperature of explosion down to the temperature of the atmosphere, the efficiency can be found by using the formulæ 12 and 13 to get proportions of available and total work, and then get from the nature of the compression curve the total heat discharged. As this is variable it will be better to study it from a numerical example later on.

The diagram given is the best possible for this kind of cycle.

EFFICIENCY FORMULÆ FOR THE DIFFERENT TYPES.

The general formulæ for efficiency of the four kinds of cycle are as follows.

TYPE 1, 1*st Case* :

$$\text{E} = 1 - y\,\frac{\text{T}^1 - t}{\text{T} - t}. \qquad (16)$$

T¹ in terms of T and t:

$$\text{T}^1 = t\left(\frac{\text{T}}{t}\right)^{\frac{1}{y}}.$$

2nd Case :

$$E = 1 - \frac{(T^1 - t^1) + y(t^1 - t)}{T - t}. \tag{17}$$

TYPE 2, 1*st Case* :

$$E = 1 - \frac{T^1 - t}{T - t_c}; \tag{18}$$

$$\text{also } E = 1 - \frac{t}{t_c},$$

2nd Case :

$$E = 1 - \frac{\frac{1}{y}(T^1 - t^1) + (t^1 - t)}{T - t_c} \tag{19}$$

TYPE 3, 1*st Case* :

$$E = 1 - y\frac{T^1 - t}{T - t_c} \tag{20}$$

T^1 in terms of T and t :

$$T^1 = t\left(\frac{T}{t_c}\right)^{\frac{1}{y}}$$

2nd Case :

$$E = 1 - \frac{T^1 - t}{T - t_c}. \tag{21}$$

$$\text{also } E = 1 - \frac{t}{t_c}.$$

3*rd Case* :

$$E = 1 - \frac{(T^1 - t^1) + y(t^1 - t)}{T - t_c}. \tag{22}$$

TYPE 1 A :

$$E = 1 - \frac{t(y - 1) \text{ Log. } \varepsilon \left(\frac{T}{t}\right)^{\frac{1}{y-1}}}{T - t} = 1 - \frac{t \text{ Log. } \varepsilon \frac{T}{t}}{T - t}. \tag{23}$$

Those formulæ will be found very convenient in rapidly calculating the theoretical efficiency for any kind of diagram, but they do not throw much light upon the relative advantage of the different types. In type 1, for instance, it is apparent that efficiency increases with increase of temperature because the fraction $\frac{T^1 - t}{T - t}$

becomes less with increase of T, but it does not rapidly become less because T^1 also increases with increase of T.

In type 2, 1st case, the efficiency is quite independent of T, and is dependent only on the ratio between t and t_c or v_o and v_c. Increase of T (maximum temperature) increases the available portion of the engine diagram, and therefore the average pressure, but without altering the efficiency.

Type 3.—With this type it is easy to see (1st case) that the efficiency is greater than in type 1, but only a numerical example will show the proportion.

In the second case it may be greater or less than in type 1, depending altogether on the amount of the compression.

To obtain a clear idea of the relative values of the efficiencies, it is necessary to calculate a few numerical examples.

CALCULATED EXAMPLES OF EFFICIENCY OF THE TYPES.

Numerical Examples.—Using air as the working fluid, the value of y, the ratio of specific heat at constant volume to specific heat at constant pressure is 1·408.

$$\frac{K_p}{K_v} = y = 1{\cdot}408.$$

The gaseous mixture used in a gas engine differs considerably from pure air in its composition, and consequently in the ratio between specific heat at constant volume, and specific heat at constant pressure, but it is advisable in the first place to consider the cycle as using air pure and simple. So many circumstances modify the theoretic efficiency in actual practice that they can be best considered after studying the simpler cases.

The temperature 1600° C. is a very usual one in the cylinder of a gas engine, and it will be calculated in each instance as the maximum, 17° C. being taken as atmospheric temperature.

A similar set with 1000° C. as the maximum will be calculated to show in each case the change of efficiency, if any, with change of maximum temperature.

Type 1.—1*st Case.* The expansion is continued to atmospheric pressure.

Taking $T = 1600°$ C. $= 1873°$ absolute.
$t = 17°$ C. $= 290°$ „

Then T^1 = the temperature after adiabatic expansion to atmospheric pressure.

$$T^1 = t\left(\frac{T}{t}\right)^{\frac{1}{y}} \qquad (2)$$

$$T^1 = 290\left(\frac{1873}{290}\right)^{\frac{1}{1\cdot408}} = 1090^\circ \text{ absolute.}$$

The efficiency is

$$E = 1 - y\frac{T^1 - t}{T - t} = 1 - 1\cdot408\,\frac{1090 - 290}{1873 - 290} = 0\cdot29$$

$E = 0\cdot29$ with maximum temperature of 1600° C.

Taking the maximum temperature of explosion as 1000° C.

$$\begin{aligned} & \text{Absolute} \\ T &= 1273^\circ = 1000^\circ \text{ C.} \\ t &= 290^\circ = 17^\circ \text{ C.} \\ \text{then } T^1 &= 829^\circ. \end{aligned}$$

$$E = 1 - 1\cdot408\,\frac{829 - 290}{1273 - 290} = 0\cdot23.$$

E = 0·23 with maximum temperature of explosion as 1000° C.

In this cycle the efficiency evidently increases with increase of the temperature of the explosion, but not in proportion to the increase of temperature; a change of maximum temperature from 1000° to 1600° C. only causing the efficiency to rise from 0·23 to 0·29. That is, at the first temperature, 23 heat units out of every 100 given to the cycle will be converted into work, while with the second much higher temperature, only 29 units of 100 will be converted into work.

The second case of this type is the one most commonly occurring in practice. The cylinder is so arranged that the charge is taken in for half-stroke, the explosion then occurs, and the piston completes its stroke, expanding the heated gases from one volume to two volumes.

In the diagram, fig. 12, suppose volume v to be equal to $2\,v_o$, and

$$\begin{aligned} T &= 1873^\circ \text{ absolute.} \\ t &= 290^\circ \quad " \end{aligned}$$

To get T^1,

$$\frac{T}{T^1} = \left(\frac{v}{v_o}\right)^{\gamma - 1} \text{ or } \frac{T^1}{T} = \left(\frac{v_o}{v}\right)^{\gamma - 1}$$

$$T^1 = T\left(\frac{v^o}{v}\right)^{y-1}$$

$$T^1 = 1873\left(\frac{1}{2}\right)^{0{\cdot}408} = 1411^\circ \text{ absolute.}$$

To calculate efficiency t^1 is still required; it is, in terms of volume and t,

$$t^1 = \frac{v}{v_o}t = \frac{2}{1}290 = 580^\circ \text{ absolute.}$$

The efficiency can now be obtained from formula (17).

$$E = 1 - \frac{(T^1 - t^1) + y(t^1 - t)}{T - t}$$

$$= 1 - \frac{(1411 - 580) + 1{\cdot}408(580 - 290)}{1873 - 290}$$

$$= 1 - \frac{831 + 1{\cdot}408 \times 290}{1583} = 0{\cdot}22 \text{ nearly}$$

For this case $E = 0{\cdot}22$,

showing the effect of limiting the expansion and discharging at a pressure above atmosphere.

Taking the same ratio of expansion and the lower maximum temperature of 1000° C.

$$T = 1273^\circ \text{ absolute.}$$
$$t = 290^\circ \quad ,,$$

as before, $T^1 = T\left(\frac{v^o}{v}\right)^{y-1} = 1273\left(\frac{1}{2}\right)^{0{\cdot}408} = 959^\circ$ absolute,

and t^1 is still $290 \times 2 = 580^\circ$ absolute.

Therefore $E = 0{\cdot}20$.

Here the diminution of efficiency due to diminished expansion is not so great as in the first, or rather the higher, temperature,

with complete expansion	1000° C. giving	0·23,
,, limited ,,	1000° C. ,,	0·20;
with the higher temperature of	1600° C.,	
with complete expansion	1600° C. giving	0·29,
,, limited ,,	1600° C. ,,	0·22.

It is evident from these results that where the amount of expansion is from one volume to two volumes, as in the Lenoir and Hugon engines, the efficiency does not substantially improve with increasing temperature.

TYPE 2.—1*st Case.* Where the expansion is carried far enough to reduce the working pressure to atmosphere, the efficiency of this kind of engine is quite independent of the temperature of combustion. This is shown by Professor Rankine[1] in his work on the steam engine. Whether the heat added after compression be great or small in amount, the proportion of it which is converted into work is stationary.

The compression most commonly used in this kind of engine is 60 lbs. per sq. in. above atmosphere, 75 lbs. per sq. in. absolute, taking the atmospheric pressure as 15 lbs. per sq. in.

The compression is, as before stated, adiabatic; no heat is lost or gained. The temperature rises simply because of work performed upon the air.

Let

Atmospheric temperature and pressure (absolute) $t, p = 290° - 15$
Compression, ,, ,, ,, $t_c, p_c = \quad -75$

$$\frac{t_c}{t} = \left(\frac{p_c}{p}\right)^{\frac{\gamma - 1}{\gamma}}$$

$$t_c = t\left(\frac{p_c}{p}\right)^{\frac{\gamma - 1}{\gamma}}$$

$$t_c = 290\left(\frac{75}{15}\right)^{0{\cdot}29} = 462{\cdot}5° \text{ absolute,}$$

$$\mathrm{E} = 1 - \frac{290}{462{\cdot}5} = 0{\cdot}37$$

$$\mathrm{E} = 0{\cdot}37.$$

This result is much better than any obtained with the first type. It holds equally good for all combustion temperatures; with either 1000° C. or 1600° C. the efficiency would still be 0·37, so long as that degree of compression was used. With a higher compression the efficiency increases; 100 lbs. per sq. in. above atmosphere is quite a workable degree of compression. It is instructive to calculate the efficiency with this pressure:

---

[1] *The Steam Engine*, Prof. Rankine, p. 373, Formula (7).

$t = 290°$ absolute.
$p = 15$ lbs. per sq. in. absolute.
$p_c = 115$ " " " "

$$t_c = 290\left(\frac{115}{15}\right)^{0.29} = 524° \text{ nearly.}$$

$$E = 1 - \frac{290}{524} = 0{\cdot}45.$$

$$E = 0{\cdot}45.$$

This type is evidently much superior to the first type, as it is capable of greatly increased efficiency by the mere increase of compression.

In the engines in practice expansion has not been carried far enough to give the results calculated above. It has been usual to construct the engine so that the compression pump is one-half of the volume of the motor cylinder, that is, the ratio of the expansion is from one volume to two volumes at atmosphere. Taking first a compression of 60 lbs. per sq. in. above atmosphere with this proportion between the volumes at atmosphere, and the highest temperature as 1600° C., then (diagram, fig. 13)

$T = 1873°$ absolute.
$t = 290°$ "
$t_c = 462{\cdot}5°$ "
$t^1 = 290 \times 2 = 580.$

Before getting T^1 it is necessary to get the volume v_p at the highest temperature. It is

$$v_p = v_c \frac{T}{t_c}$$

and $$v_c = v_o\left(\frac{p}{p_c}\right)^{\frac{1}{y}} = 1\left(\frac{15}{75}\right)^{\frac{1}{1{\cdot}408}} = 0{\cdot}318$$

$$\therefore\ v_p = 0{\cdot}318\,\frac{1873}{462{\cdot}5} = 1{\cdot}29$$

and $$T^1 = T\left(\frac{v_p}{v}\right)^{y-1} = 1873\left(\frac{1{\cdot}29}{2}\right)^{0{\cdot}408} = 1566° \text{ absolute.}$$

The efficiency can now be found by formula (19)

$$E = 1 - \frac{\frac{1}{y}(T^1 - t^1) + (t^1 - t)}{T - t_c} = 1 - \frac{\frac{1}{y}(1566 - 580) + (580 - 290)}{1873 - 462{\cdot}5}$$

$$= 1 - \frac{0{\cdot}71\,(986) + 290}{1410{\cdot}5} = 1 - 0{\cdot}70 = 0.30$$

$$E = 0{\cdot}30.$$

Here the insufficient expansion has caused the efficiency possible from the compression to fall from 0·37 to 0·30.

Calculating in the same way for the greater compression of 100 lbs. per sq. in. above atmosphere, with expansion ratio between compression and motor cylinders of two, it is found that the result is improved.

Here $v_c = 0{\cdot}235$ vol.
and $v_p = 0{\cdot}841$ vol.

$$T^1 = T\left(\frac{v_p}{v}\right)^{\gamma-1} = 1873\left(\frac{0.841}{2}\right)^{0{\cdot}408} = 1318^\circ \text{ absolute.}$$

$$T = 1873^\circ$$
$$t = 290^\circ$$
$$t^1 = 580^\circ$$
$$t_c = 524^\circ$$

The efficiency is therefore

$$E = 1 - \frac{\frac{1}{\gamma}(T^1 - t^1) + (t^1 - t)}{T - t_c} = 1 - \frac{0{\cdot}71\,(1318 - 580) + (580 - 290)}{1873 - 524}$$

$$= 1 - \frac{0{\cdot}71 \times 738 + 290}{1349} = 1 - \frac{814}{1349} = 0{\cdot}40$$

$$E = 0{\cdot}40.$$

The greater compression has greatly increased the efficiency while leaving the proportion of the two cylinders unaltered.

Still using the same cylinders, the efficiency with compression of 60 lbs. above atmosphere and a maximum temperature of 1000° C., is

$$E = 0{\cdot}36 \text{ nearly,}$$

the data being

$T^1 = 906^\circ$ $T = 1273^\circ$
$t^1 = 580^\circ$ $t = 290^\circ$
$t_c = 462^\circ$,

volumes

$v_o = 1$ $v = 2$
$v_c = 0{\cdot}318$ $v_p = 0{\cdot}87.$

Using the higher compression 100 lbs. above atmosphere with 1000° C. as highest temperature

$$E = 0{\cdot}44.$$

Data : $T^1 = 763^\circ$ $T = 1273^\circ$
$t^1 = 580^\circ$ $t = 290^\circ$
$t_c = 524^\circ$
Vol. : $v_o = 1$ $v = 2$
$v_c = 0{\cdot}235$ $v_p = 0{\cdot}57$

In this kind of engine the best result is always obtained when the expansion is carried to atmospheric pressure. The necessary proportion between the two cylinders, to accomplish this, depends on two things: the temperature of compression, and the temperature of combustion. The ratio between the cylinders should be

$$r = \frac{T}{t_c}.$$

With a temperature of compression of 462°, for instance, and a maximum of 1873° absolute $\left(\frac{1873}{462} = 4{\cdot}05\right)$ the volume of the motor cylinder would require to be 4·05 times that of the pump. With the increased compression giving 524° absolute $\left(\frac{1873}{524} = 3{\cdot}57\right)$ ratio of motor to pump 3·57 to 1.

With the lower maximum temperature of 1273° the ratios for the two compression values are

$$\frac{1273}{462} = 2{\cdot}75 \qquad \frac{1273}{524} = 2{\cdot}43 \text{ nearly.}$$

These figures explain why the efficiency varies so much with two cylinders of ratio 1 to 2 with change of maximum temperature and compression.

Type 3.—1*st Case.* In this case expansion is carried to atmosphere. It is evident from the formulæ that efficiency varies to some extent with maximum temperature of the explosion.

Taking first a maximum temperature of 1600° C., as in the last type calculated, with a pressure of compression 60 lbs. above atmosphere,

The data are as follows:

Temperatures $T = 1873^\circ$ $t = 290$
$t_c = 462.$

T^1 in terms of T and t, t_c is (see p. 57)

$$T^1 = t\left(\frac{T}{t_c}\right)^{\frac{1}{y}} = 290\left(\frac{1873}{462}\right)^{\frac{1}{1{\cdot}408}} = 783°$$

$$T^1 = 783°.$$

The efficiency therefore

$$E = 1 - y\,\frac{T^1 - t}{T - t_c} = 1 - 1{\cdot}408\,\frac{783 - 290}{1873 - 462}$$

$$E = 0{\cdot}51.$$

With compression 100 lbs. above atmosphere,

$$t_c = 524°$$

and T^1 is therefore $$T^1 = 290\left(\frac{1873}{524}\right)^{\frac{1}{1{\cdot}408}} = 716°$$

and $$E = 1 - 1{\cdot}408\,\frac{545 - 290}{1873 - 524}$$

$$E = 0{\cdot}55.$$

Taking, next, 1000° C. as the highest temperature, first with the lower compression, and after with the higher compression,

with 60 lbs. compression T^1 is 595° absolute
with 100 „ T^1 is 545° „
$E = 0{\cdot}47$ at 60 lbs., $E = 0{\cdot}52$ at 100 lbs., with 1000° C.

In this case the efficiency varies both with the maximum temperature of the explosion and the compression temperature previous to explosion. A glance at the numbers placed together will show clearly the relationship.

Max. temps. in °C.	1600°	1600°	1000°	1000°
Pressure of compression above atmosphere	60 lbs.	100 lbs.	60 lbs.	100 lbs.
Efficiency	0·51	0·73	0·47	0·52

2nd Case.—Here the expansion after explosion is not carried on far enough to reduce the pressure to atmosphere. It terminates when the volume is the same as existed before compression, that is, the volume swept by the motor piston in expanding doing work is identical with that swept by the pump piston in compressing up to maximum pressure. Pump and motor are equal in volume. To this case of type 3 belong all compression engines in which the motor piston compresses its charge into a space at the end of the cylinder.

In this case, as in case 1, type 2, the theoretic efficiency of the engine is quite independent of the maximum temperature of the explosion. So long as the volume after expansion is the same as that before compression, it does not matter in the least how much heat is added at constant volume of compression; whether only a few degrees rise occurs or 1000° or 2000°, it is all the same so far as the proportion of added heat converted into work is concerned. That proportion depends solely upon the amount of compression.

For 60 lbs. adiabatic compression, temperature 462° absolute, the efficiency is 0·37; for 100 lbs. above atmosphere it is 0·45. Given by the formula $\text{E} = 1 - \frac{t}{t_c}$. (See p. 57.)

E depends absolutely upon the temperature of the atmosphere and the temperature of compression t and t_c. If the relative volumes of space swept by piston and compression space be known, then the efficiency can be at once calculated.

3rd Case.—Here the expansion is carried further than the original volume before compression, but not far enough to reduce the pressure to atmosphere. Efficiency is always less than in the first case with corresponding temperature of explosion and compression, but greater than in the second case. It is found by the formula:

$$\text{E} = 1 - \frac{(\text{T}^1 - t^1) + y\,(t^1 - t)}{\text{T} - t_c}.$$

t^1 depends on the relationship between the volumes v_o and v the volume at atmosphere and the volume of discharge after expansion. it is always:

$$t^1 = t\,\frac{v}{v_o}\,.$$

T^1 is also found by the same method as in types 1 and 2. It is better to postpone calculating any particular case of this at present, as no engine doing this has yet got into public use, and it can be considered further on in discussing the effect of increased expansion in the actual engines.

Type 1 A.—The efficiency of this type of heat cycle depends to a considerable extent upon cooling during the return stroke; in its best form, cooling at the lowest temperature during isothermal compression, it cannot be carried out without introducing the very disadvantages with which the hot-air engine was saddled, namely, a dependence upon the slow convection of air for the discharge of the heat necessarily rejected from the cycle. The rapid performance of this operation is impossible, and accordingly it is hardly fair to compare this type with those preceding; they could all of them be greatly improved in theory by introducing greater expansions and cooling by convection at the lowest temperature, but all at the expense of rate of working. The efficiency of type 1 A, will be found to be high; but it is to be kept constantly in mind that the penalty of slow rate of work was fully exacted in the practical examples of the kind in public use. They are exceedingly cumbrous, and give but a trifling power in comparison with their bulk and weight. The efficiency in this type is dependent upon T and t only.

$$E = 1 - \frac{(y - 1)\, t \,\text{Log.}_{\varepsilon} \left(\frac{T}{t}\right)^{\frac{1}{y-1}}}{T - t} = 1 - \frac{t \,\text{Log.}_{\varepsilon} \frac{T}{t}}{T - t}.$$

Take first $T = 1873^{\circ}$

$t = 290^{\circ}$

$$E = 1 - \frac{290 \times 1{\cdot}865}{1583}$$

$$E = 0{\cdot}66.$$

This is a very high efficiency, but it is obtained by using an enormous expansion,

$$\frac{v}{v_0} = \left(\frac{T}{t}\right)^{\frac{1}{y-1}} = 96{\cdot}7 \text{ nearly.}$$

The piston must move through nearly 100 times the original volume of the charge before the temperature is reduced to the temperature existing before igniting; in passing back to unit volume the gases must be supposed to keep at t by the cooling effect of the cylinder walls.

When $T = 1000^{\circ}$ C. $= 1273^{\circ}$ absolute,

$t = 17^{\circ}$ C. $= 290^{\circ}$,,

the efficiency is

$$E = 0{\cdot}56,$$

and the expansion required is not so great, being 37·5 volumes.

The actual ratios of expansion used in practice have not approached those proportions, and will be considered while discussing the diagrams taken from engines of this type.

COMPARISON OF RESULTS.

The two maximum temperatures used, 1600° C. and 1000° C., with the lowest temperature, 17° C., give in a perfect heat-engine, efficiencies

1600° C. = 0·85 nearly,
1000° C. = 0·77 ,,

One case in type 3 comes nearer to a perfect heat-engine than any of the others. To compare easily the following table will be useful.

TABLE OF THEORETIC EFFICIENCY.

	Max. temp. °C.	Compression		Efficiency
		Temp. abs. °C.	Pressure above atmos.	
Type 1.				
Expanding to atmosphere	1600°	—	—	0·29
,, ,, ,,	1000°	—	—	0·23
Expanding to twice volume existing before ignition	1600°	—	—	0·22
	1000°	—	—	0·20
Type 2.				
Expanding to atmosphere	—	462°	60 lbs.	0·37
,, ,, ,,	—	524°	100 lbs.	0·45
Expanding to twice volume existing before compression	1600°	462°	60 lbs.	0·30
	1600°	524°	100 lbs.	0·40
	1000°	462°	60 lbs.	0·36
	1000°	524°	100 lbs.	0·44
Type 3.				
Expanding to atmosphere	1600°	462°	60 lbs.	0·51
,, ,, ,,	1600°	524°	100 lbs.	0·55
,, ,, ,,	1000°	462°	60 lbs.	0·47
,, ,, ,,	1000°	524°	100 lbs.	0·52
Expanding to the same volume as existed before compressing	—	462°	60 lbs.	0·37
		524°	100 lbs.	0·45
Expanding to greater volume than existed before compressing, but not enough to reach atmosphere	Efficiency between 1st and 2nd cases of this type depending on ratio of expansion.			
Type 1 A.				
Expanding from max. temp. to lowest temperature	1600°	—		0·66
	1000°	—		0·56

Comparing first the best results of each type, it is evident that type 1 is the least perfect as a heat-engine, giving back only 0·29 of the total heat entrusted to it as mechanical work, and rejecting the rest of the heat. Type 2 is distinctly better, giving a maximum efficiency of 0·45, or nearly half the heat converted into work.

Type 1 A, with a heat conversion of 0·66, is still better.

It cannot be too constantly kept in mind that it by no means follows that the best theoretic efficiency will give the best result in practice. If gained at the expense of great volume or an impracticable process, it may not be worth so much as a worse cycle where small volume of cylinder and an easy process make it more easily attainable. Type 1 A is at a great disadvantage in the matter of expansion; it requires, as has been shown, expansion of 96·7 and 37·5 volumes respectively, so great that it is practically out of comparison as a workable cycle with the others. The other cycles vary in this respect also, but the variation will fall under the consideration of mechanical efficiency at a later stage. Type 1 A is so much out that it was necessary to mention it here.

In type 1, the efficiency varies with the temperature of explosion, especially where the expansion is carried to atmosphere; the difference, however, is not great, a very large increase of maximum temperature but slightly increasing the efficiency, 1000° C. giving 0·23, and 1600° C. only 0·29, of heat conversion. When the expansion is limited to twice the volume at the moment of heating, the effect of increasing temperature in increasing the efficiency is almost nil, 1000° C. giving 0·20 efficiency, and 1600° C. only 0·22 efficiency. The conclusion to be drawn from the fact is this: in engines of the Lenoir or Hugon kind, with limited expansion, the economy is not increased by using high temperatures; a weak mixture will give as good an indicated efficiency as a strong one.

With type 2, the maximum efficiency is obtained by expanding to atmospheric pressure, and in this case it is quite independent of the temperature of combustion; it does not matter whether a great or small increase of temperature occurs at the pressure of compression, the efficiency remains the same. That is, whether much heat be added or little heat, the proportion converted into work depends on one thing only, that is, the amount of compression—the greater the compression the greater the efficiency of the engine.

The pressures of compression which have been calculated, are pressures which have been used for the kind of cycle in practice. The only limits to increasing compression are the practical ones of strength of engine and leakage of piston. The difference between efficiency at 60 lbs. and 100 lbs. compression above atmosphere is considerable, the first giving $E = 0{\cdot}37$, the second $E = 0{\cdot}45$.

When the expansion is limited to twice the volume existing before compression the maximum temperature then affects the efficiency, but not to such an extent as the compression.

Type 3.—This is the best type of all from the point under consideration. The efficiency in the best form of it varies both with maximum temperature and pressure of compression. At 1600° C. maximum temperature and compression 60 lbs. per square inch above atmosphere, $E = 0{\cdot}51$. At the same maximum temperature but the higher compression of 100 lbs. above atmosphere, it rises. With maximum temperature of 1000° C. for these two compression pressures the efficiencies are $E = 0{\cdot}47$ and $E = 0{\cdot}52$. The best case of this type is not the one occurring in practice, in fact no compression engine of this kind has ever been much which expands to atmosphere. Usually expansion is only carried to the same volume as existed before compression, and there the efficiency is quite independent of the maximum temperature; it is determined by compression solely as in type 2.

For compression 60 lbs. per square inch above atmosphere it is 0·37, and for 100 lbs. per square inch above atmosphere it is 0·45, the difference between types 2 and 3 in this case being, that type 2 expands its working fluid at the pressure of compression, which remains constant, and the pressure falls to the pressure of atmosphere by the movement of the piston doing work; in type 3 the heat is added to the working fluid at constant volume, pressure increasing, then expansion doing work, till volume before compression is attained. The one acts by increase of the volume of the working fluid by heat, the other by increase of pressure of the working fluid by heat. The one engine gives large volumes, low pressures; the other small volumes, high pressures.

In type 1 A, the change of volume required is so great that its efficiency cannot be fairly compared with the others.

Conclusions.—The best cycle for great efficiency, excluding type 1 A, is produced by using *compression* in the manner of type 3.

In any cycle with any definite expansion, increase of compression previous to heating produces increase of the proportion of heat converted into work. In some cases of compression cycles, increase of the highest temperature does not increase the efficiency; it may even diminish it.

There are cases in types 2 and 3 when the efficiency is quite independent of the maximum temperature, depending solely on the amount of compression employed.

CHAPTER IV.

THE CAUSES OF LOSS IN GAS ENGINES.

In calculating the efficiency of the different kinds of engines, it has been assumed that the conditions peculiar to each cycle have been perfectly complied with. In actual engines this is impossible; it is therefore necessary to discover in what manner practice fails in performing the operations required by theory.

The actual engines differ from the ideal ones in several ways:

1. The working fluid loses heat to the walls enclosing it after its temperature has been raised to the highest point;
2. The working fluid often gains heat when entering the cylinder at a time when it should remain at the lowest temperature;
3. The supply of heat is never added instantaneously as is required in some types;
4. The working fluid does not behave as a perfect gas; owing to the complex phenomena of combustion, to some extent its physical state is changed during the addition of heat;
5. The admission, transfer and expulsion of the working fluid are not accomplished without some resistance, wire-drawing during admission, back-pressure during exhaust.

The first cause of loss is by far the most considerable and will be considered first.

Loss of Heat to the Cylinder and Piston.

Although this is the most considerable source of loss in all gas engines, the stock of information in existence upon the subject is quite insufficient to justify any attempt to state a general law. So far as the author is aware, no experiments have yet been made to determine the rate at which a mass of heated air, at from 1000° to 1600° C. loses heat to the comparatively cool metal surfaces which enclose it. That the rate of flow is rapid is quite evident. Otherwise, it would be impossible to raise steam with the relatively small heating surfaces generally used in boilers. Before applying the efficiency values obtained to actual practice it is necessary to know at what rate a cubic foot of air at about 1600° C. in contact with metal walls at from 17° C. to 100° C. will lose heat; also to know how that rate changes with change of temperature and density. Much is known of the laws of cooling at lower temperatures, but little positive data exist for temperatures so high as those occurring in the gas engine. A hot gas loses heat to the colder walls enclosing it mainly by circulation or convection. The conductivity of gases for heat is very slight, and unless in some way a large surface of the gas is exposed to the cooling surface, practically no heat would escape from the working fluid in the short time during which it is exposed in gas engines. Any arrangement which favours or hastens convection will therefore increase loss by increasing the extent of hot gaseous surface exposed to the walls. The smaller the surface to which a given volume of working fluid is exposed the less heat will it lose in a given time. So far as loss of heat is concerned then, the best type of engine is that which exposes a given volume of working fluid to the smallest surface in performing its cycle. Suppose that in the three types the pistons move at the same velocity, then that which requires to move through the smallest volume, the areas of the pistons being supposed equal, will take the shortest time to perform its cycle. In the first engine the piston moves through 2·7 vols., with the hot air filling the cylinder; the second, through 3·7 vols.; and the third, through 2·4 vols. (see diagrams 11, 13 and 15). As the volumes are proportional to the time taken to perform each cycle the third type has the best of it, the time of exposure of the hot working fluid being the least; the second type is worse than the first. There is still another circumstance in addition to surface exposed and time of exposure, that is, the average temperature of the hot gas which is exposed. If the average temperature is lower in one type than in another during exposure to a given surface for a certain time, then obviously less heat will be lost in the one than in the other. Comparing the average temperatures it is found, that in the first the temperature ranges from 1600° C. to 817° C.; in the second from 1600° C. to 901° C.; and in the third from 1600° C. to 510° C. The third will therefore show a lower average temperature than the others. Three conditions are requisite in the engine which is to lose the minimum of heat from its working fluid :

1. In performing its cycle it should expose a given volume of its working fluid to the least possible cooling surface;
2. It should expose it for the shortest possible time;
3. The average temperature during the time of exposure should be as low as possible—

which conditions are best fulfilled by the third type. In addition to its advantage in theoretic efficiency it possesses the further good points in practice of proportionally small cooling surfaces, short time of exposure, and rapid depression of temperature due to work done, consequently small loss of heat to the cylinder and piston.

The diagrams, figs. 11, 13 and 15, have been selected from the others belonging to each type because the pressures, temperatures, and relative volumes closely correspond with those which would be best and at the same time readily practicable.

The flow of heat really occurring in the gas engine cylinder will be discussed when the actual diagrams come under consideration; meantime, it is sufficient to have proved that the third type will in practice give results more closely approaching its theory than the others. If in each case a constant proportion of the heat supplied were lost to the cylinder and piston, the ratio of the efficiencies would remain constant, and although it would be impossible from present data to predict the actual values, yet the relative values would be known.

GAIN OF HEAT BY THE WORKING FLUID WHEN ENTERING THE ENGINE.

In all types of gas engine it is found most economical to keep the motor cylinders as hot as possible; they are generally worked at a temperature close upon the temperature of boiling water. This is done to diminish the loss of heat from the explosion. It follows that if the working fluid is introduced at a lower temperature it becomes heated. In the first type, the charge should be admitted and remain at the lowest temperature until the moment of explosion, which is of course impossible if the cylinder is at 100° C. As the piston itself is hotter than that, it may be supposed that the charge is heated to that point.

Taking an extreme case and calculating the effect of having an absolute temperature of 390° for the lower limit, it will be found that the efficiency is diminished. In case 1, type 1, where the expansion is carried to atmosphere with a maximum temperature of 1873° absolute = 1600° C., the value becomes reduced to 0·23.

With a maximum temperature of 1273° absolute = 1000° C the efficiency is 0·16.

TYPE I.

Initial temp. of working fluid	Max. temp.	Efficiency
17° C.	1600° C.	0·29
117° C.	1600° C.	0·23
17° C.	1000° C.	0·23
117° C.	1000° C.	0·16

Here heating, while introducing the charge will always cause diminution in efficiency, the proportion of loss being greater with the lower maximum temperature. At 1600° C. the loss is nearly one-fifth, while at 1000° C. it is close upon one-fourth.

It is very difficult to say whether it is better to work with the cylinder hot or cold. The constructor finds himself in a dilemma; if the cylinder is kept as cold as the surrounding air, then the hot gases cool more rapidly. If he keeps the cylinder hot to diminish this, the efficiency falls also. Experiment alone can decide the question.

In engines of type 2 it is a usual proceeding to leave the compression cylinder entirely without water-jacketing, under the impression that heat is thereby saved; the temperature consequently rises to very nearly that of compression, and the entering charge becomes considerably heated before compression. This is especially the case if the admission area is small, and throttling occurs; all the energy of velocity of the entering gas becomes transformed into heat. As in the previous case the charge may be considered to rise to 117° C. before compression.

Where expansion is carried to atmosphere it has been shown that the efficiency is quite independent of the maximum temperature, but is determined by one circumstance only—the amount of the compression. As

$E = 1 - \frac{t}{t_c}$ * and t is the temperature absolute before compressing
t_c ,, ,, ,, ,, after ,,

and as $\frac{t_c}{t} = \left(\frac{p_c}{p}\right)^{\frac{\gamma - 1}{\gamma}}$, it follows that with a constant ratio between the pressures before and after compression, the ratio of temperature before and after compressing will also remain constant ; that is, the efficiency is not in any way affected by heating the working fluid, provided the same degree of compression is used. Increase of temperature previous to compression causes a proportional increase of temperature after compressing without in any way disturbing the ratio between them.

This is an important, if in appearance a somewhat paradoxical fact, and it may be stated in another way :

If an engine receives all its supply of heat at one pressure, and rejects all its waste heat at another pressure, after falling from the higher to the lower pressure by expansion doing work, the efficiency is constant for all maximum temperatures of the working fluid.

The proportion of heat converted into work is not changed in any way by increasing the temperature before compressing, and if only one degree of heat be added after compressing, the same proportion of that one degree is converted into work, as would be done with any addition of heat however great.

Where the expansion is not continued enough to reduce the pressure after heating, to atmosphere, as in the cases of this type which occur in practice, this is not quite true ; the compression still remains the most powerful element of efficiency, but heating before compression produces some change, just as increase of temperature after compression produces change. The change is

---

* See p. 57.

not great, and it is always in the direction of improvement with a limited expansion. If the lower temperature t is increased, the compression temperature t_c increases in proportion, and is accordingly nearer the maximum temperature. The volume increases less on heating, so that the effect upon efficiency is the same as if the expansion had been increased ; the terminal pressure will more closely approach atmosphere, and therefore come nearer to the condition of maximum efficiency.

In engines of type 3 the compression and expansion are often performed in the same cylinder. For this purpose it is necessary to leave at the end of the cylinder a space into which the charge is to be compressed. As the piston does not enter this space, a considerable volume of exhaust gases remains to mix with the fresh cold charge. Partly from this and partly from the heating effect of the cylinder and piston, the charge becomes considerably heated before compression. The temperature of 200° C. is not unusual. Here the simplest case is that where the expansion is continued to the same volume as existed before compression. The efficiency depends solely upon the amount of the compression ; for any given degree of compression it is constant, whether the addition of heat at constant volume after compression be great or small. The efficiency is $E = 1 - \frac{t}{t_c}$ as in type 2 (see p. 57) ; and the two absolute temperatures vary in the same ratio, that is, if the charge is heated before compression, the temperature after compression will be increased in the same ratio. The two temperatures will therefore bear a constant ratio to each other, whatever the initial temperature may be, provided the compression is constant. Heating the charge before compression will consequently have no disturbing effect upon the theoretical efficiency.*

Where the expansion is carried to atmosphere the case is different. The diagram (fig. 15) may be considered to be made up of two parts giving two different efficiencies, the sum of which in this case is 0·51. In expanding from the compression volume v_c to the original volume v (compression 75 lbs. per square inch)

---

* It is here necessary to distinguish between theoretical and practical efficiency. Heating before compression diminishes efficiency in practice by increasing maximum temperature, and therefore loss of heat.

the total efficiency is 0·37, and from that volume to *v* and atmospheric pressure, 0·14. The latter portion still obeys the same law as in a similar case of type 1 ; so that if the initial temperature at volume *v* be supposed 117° C. it will lose efficiency in a similar way. The temperature 901° C. will still exist at that point of the expanding line, so that it may be taken as similar to the case calculated on p. 75, where 1000° C. is the maximum. The loss of efficiency there is from 0·23 to 0·16 for an initial temperature of 117° C., which makes 0·14 become nearly 0·10. The total efficiency would therefore be 0·47 instead of 0·51 without previous heating.

Efficiency diminishes with increased temperature of working fluid before compressing, if the expansion is carried to atmosphere, but does not change where the expansion is limited to the initial volume.

OTHER CAUSES OF LOSS.

The third, fourth, and fifth causes of loss require for their examination a comparison of the actual diagrams, and a knowledge of the phenomena of explosion and combustion, and so cannot be discussed at this stage.

CHAPTER V.

COMBUSTION AND EXPLOSION.

In the preceding chapters the gas engine has been considered simply as a heat engine using air as its working fluid ; it has been assumed that in the different cycles, the engineer is able to give the supply of heat either instantaneously, or slowly, at will ; and also that he can command temperatures so high as 1000° C. or 1600° C. It is now necessary to study the properties of gaseous explosive mixtures in order to understand how far these assumptions are true.

On true Explosive Mixtures.

When an inflammable gas is mixed with oxygen gas in certain proportions, the mixture is found to be explosive : a flame approached to even a small volume contained in a vessel open to the air will produce a sharp detonation. Variation of the proportions will cause change in the sharpness of the explosion. There is a point where the mixture is most explosive ; at that point the inflammable gas and the oxygen are present in the quantities requisite for complete combination. After explosion the vessel will contain the product or products of combustion only, no inflammable gas remaining unconsumed, or oxygen uncombined, both having quite disappeared in forming new chemical compounds.

That mixture may be called the true explosive mixture.

Definition.—When an inflammable gas is mixed with oxygen in the proportion required for the complete combination of both gases, the mixture formed is the true explosive mixture.

If the chemical formula of an inflammable gas is known, the volume of oxygen necessary for the true explosive mixture can be at once calculated. Elementary substances combine chemically with each other in certain weights known as the atomic or combining weights: chemical symbols are always taken as representing those weights of the elements indicated. In dealing with inflammable gases used in the gas engine it is convenient to remember the following symbols and weights :

Element	Symbol	Combining weight
Oxygen	O	16
Hydrogen	H	1
Nitrogen	N	14
Carbon	C	12
Sulphur	S	32

In entering or leaving any compound the elements invariably enter or leave in weights proportional to those numbers or multiples of them. Thus hydrogen and oxygen combine with each other, forming water ; the formula of the compound is H_2O, meaning that 18 parts by weight contain 16 parts of O and 2 parts of H. Similarly when carbon combines with oxygen two compounds may be formed, according to the conditions, carbonic oxide or carbonic acid, formulæ CO and CO_2, the former containing in 28 parts by weight, 12 parts of carbon and 16 parts of oxygen ; the latter in 44 parts by weight containing 12 parts of carbon and 32 parts of oxygen.

The formula of a compound therefore not only indicates its nature qualitatively, but it also indicates its quantitative composition.

H_2O not only tells the nature of water, but it represents 18 parts by weight ; CO means 28 parts by weight of carbonic oxide : CO_2 means 44 parts by weight of carbonic acid. The numbers 18, 28 and 44 are know as the molecular weights of the three compounds in question.

When dealing with gases it is more convenient to think in volumes than in weights. It is easier, for instance, to measure the proportions of explosive mixtures by volume and to say this mixture contains one cubic inch, one cubic foot or one volume of inflammable gas to so many cubic inches, feet or volumes of oxygen.

Fortunately there exists a simple relationship between the volumes of elementary gases and their combining weights, and also between the volumes of compounds and their molecular weights.

If equal volumes of the elementary gases are weighed, under similar conditions of temperature and pressure, it is found that their weights are proportional to the combining weights. Taking the weight of the hydrogen as 1, then the weights of equal volumes of nitrogen and oxygen are 14 and 16 respectively. If then it is wished to make a mixture of hydrogen and oxygen gases in the proportion of 2 parts by weight of the former to 16 parts by weight of the latter, it is only necessary to take 2 vols. H and 1 vol. O. The law may be stated in two ways, as follows :

Taking hydrogen as unity the specific gravity of the elementary gases is the same as their combining weights ; or

The combining volumes of the elementary gases are equal.

Instead of troubling to weigh out portions of the gases it is at once known that one volume of nitrogen weighs 14 parts, the same volume of hydrogen weighing one part, oxygen 16 parts, and so on through all the gaseous elements, under the same temperatures and pressures.

Knowing that water is the compound formed by the combustion of hydrogen and oxygen, and that its formula is H_2O, it is at once apparent that the true explosive mixture of these gases is 2 vols. H and 1 vol. O. By experiment it is found that the volume of the water produced is less (of course in the gaseous state) than the volume of the mixed gases before combination.

The measurement requires to be made at a temperature high enough to keep the steam formed in the gaseous state. Measure 2 vols. H and 1 vol. O into a strong glass vessel heated to 130° C.; the total is 3 vols. ; fire by the electric spark over mercury. It will be found that the steam formed when it has cooled to 130° C. after the explosion, measures 2 vols. It has been found to be true for all gaseous compounds, that however many volumes of elementary gases combine to form them the product is always two volumes. In elementary gases, one volume always contains the combining weight ; in compound gases, two volumes always contain the molecular weight. Compared with hydrogen, therefore, the specific gravity of a gaseous compound is always one-half of the molecular weight.

As before, the law may be stated in two ways :

Taking hydrogen as unity, the specific gravity of a compound gas is half its molecular weight ; or

The combining volume of a compound gas is always equal to double that of an elementary gas.

These laws are known as Gay-Lussac's laws, and form part of the very basis of modern chemistry.

Using them, the true explosive mixtures by volume and the volumes of the products of the combination can be found for any gas or mixture of gases, whether elementary or compound.

The inflammable compound gases, used in the gas engine, forming some of the constituents of coal gas are :

Inflammable gas	Formula	Molecular weight	Molecular vol.
Marsh gas	CH_4	16	2
Ethylene	C_2H_4	28	2
Carbonic oxide . . .	CO	28	2

Applying Gay-Lussac's laws, the oxygen required for true explosive mixtures and the volumes of the products of combustion are as follows for all the inflammable gases used in the gas engine :

	H_2O Steam.	CO_2 Carbonic acid.
2 vols. hydrogen (H) require 1 vol. oxygen (O) forming . .	2 vols.	—
2 vols. marsh gas (CH_4) require 4 vols. oxygen (O) forming .	4 vols.	2 vols.
2 vols. ethylene (C_2H_4) require 6 vols. oxygen (O) forming .	4 vols.	4 vols.
2 vols. carbonic oxide (CO) require 1 vol. oxygen (O) forming	—	2 vols.
2 vols. tetrylene (C_4H_8) require 12 vols. oxygen (O) forming .	8 vols.	8 vols.

With hydrogen and oxygen 3 volumes before combination become 2 volumes after combination. CH_4 and O, also C_2H_4 and O, the volumes of the products of combustion, are equal to the volumes of mixture. With carbonic oxide and oxygen 3 volumes before become 2 volumes after combination.

ON INFLAMMABILITY.

Previous to 1817, Sir Humphry Davy made the admirable researches which led him to the invention of the safety lamp. He then made experiments upon different explosive mixtures, and found that under certain conditions they lost the capability of ignition by the electric spark. True explosive mixtures, he observed, may lose inflammability in two ways; by the addition of excess of either ot the gases or of any inert gas such as nitrogen, and by rarefaction. The hydrogen explosive mixture, if reduced to one-eighteenth of ordinary atmospheric pressure, cannot be inflamed by the spark. Heated to dull redness at this pressure it will recover its inflammability and the spark will cause combination.

One volume of the mixture to which has been added nine volumes of oxygen is uninflammable, but if the density is increased or the temperature raised, it recovers its inflammability.

Eight volumes of hydrogen added, produces the same effect as the nine volumes of oxygen, but only one volume of marsh gas or half a volume of ethylene is required. The excess which destroys inflammability varies with the temperature, increasing with increase of temperature. Heating the mixture widens the range, both of dilution with excess or inert gas and reduction of pressure.

The point where inflammability ceases by diluting is very abrupt and sharply defined. The author has found that a coal gas which will inflame by the spark in a mixture of 1 gas and 14 air will not inflame with 15 of air. If the experiment be repeated on a warmer day it may inflame with 15 of air, but will not with 16 air. As the proportion is fixed for any given temperature it will be convenient to call that proportion for any mixture the 'critical proportion.' Any mixture in the critical proportion becomes inflammable by a very small increase of temperature or pressure. The exact limits of dilution temperature and pressure have yet to be discovered.

Passing from any true explosive mixture by dilution to the mixture in the critical proportion, the inflammability slowly diminishes, the explosion becoming less and less violent, till at last no report whatever is produced, and the progress of the flame (if a glass tube is used) is easily followed by the eye.

In his great work on gas analysis, Professor Bunsen confirms Davy's observations in every particular, proving loss of inflammability by dilution and reduction of pressure as well as its restoration by heating, increase of pressure and slight addition of the inflammable gas. His work, however, was not published till 1857.

On the Rate of Flame-Propagation.

The sharp explosion of a true explosive mixture is due to the very rapid rate at which a flame, initiated at one point, travels through the entire mass and thereby causes the maximum pressure to be rapidly attained. With a diluted mixture the flame travels more slowly. Dilution therefore diminishes explosiveness in two ways—by increasing the time of getting the highest pressure and also by diminishing the highest pressure which can be got. Professor Bunsen's experiments are the earliest attempts to measure the velocity of flame movement in explosive mixtures. His method is as follows :

The explosive mixture is allowed to burn from a fine orifice of known diameter, and the rate of the current of the issuing gas carefully regulated by diminishing the pressure to the point at which the flame passes back through the orifice and inflames the explosive mixture below it. This passing back of the flame occurs when the velocity with which the gaseous mixtures issue from the orifice is inappreciably less than the velocity with which the inflammation of the upper layers of burning gas is propagated to the lower and unignited layers. Knowing then the volume of mixture passing through the orifice and its diameter, the rate of flow at the moment of back ignition is known. It is identical with the rate of flame propagation through the mixture.

Bunsen made determinations for the true explosive mixtures of hydrogen and carbonic oxide.

Velocity of Flame in true explosive Mixtures. (*Bunsen.*)

Hydrogen mixture (2 vols. H and 1 vol. O) . .	34 metres per sec.
Carbonic oxide mixture (1 vol. CO and 1 vol. O) .	1 metre per sec. nearly.

The method is a singularly simple and beautiful one and answered thoroughly for Professor Bunsen's purpose at the time he devised it. Several objections, however, may be brought against it. The mixture in issuing from the jet into the air as flame, becomes mixed to some extent with the air and so cools down ; the metal plate also, pierced with the orifice, exercises a great cooling effect. If the hole were made small enough the flame could not pass back at all, however much the flow is reduced, because the heat would be conducted away so rapidly as to extinguish the flame. This had been shown by Davy in 1817; indeed it is the principle of the safety lamp. These causes probably make Bunsen's velocities too low. MM. Mallard and Le Chatelier have made velocity determinations by a method designed to obviate those sources of error.

The explosive mixture is contained in a long tube of considerable diameter, closed at one end, open to the atmosphere at the other. At each end a short rubber tube terminates in a cylindrical space closed by a flexible diaphragm. A light style is fixed upon the diaphragms. A drum revolves close to each style, both drums upon the same shaft. A tuning fork, vibrating while the experiment is being made, traces a sinuous line upon the drum and so the rate of revolution is known. The mixture is ignited at the open end, and the flame in passing the lateral opening leading to the first diaphragm ignites the mixture there, and so moves the style and marks the drum; the arrival of the flame is signalled at the other end in the same way. The drums revolving together, the distance between the two style markings measured by the vibration marks of the tuning fork gives the time taken by the flame to move between the two points. The numbers got in this way are the rates of the communication of the flame through the mixture, back into the tube, while the flame can freely expand to the air; when both ends are closed the velocity is much greater. Then, not only does the flame spread from particle to particle of the explosive mixture at the rate due to contact of the inflamed particles with the uninflamed ones, but the expansion produced by the inflammation projects the flame mechanically into the other part and so produces an ignition, which does not travel at a uniform rate, but at a continually accelerating one. In the same way, using the open tube but firing at the closed end, the expansion of the first portion adds to the apparent velocity of propagation, and projects the last portion of the mixture into the atmosphere. The true velocity of the propagation is the rate at which the flame proceeds from particle of inflamed mixture to uninflamed particle by simple contact; the true velocity depends upon inflammability alone, the rate under other conditions depends also upon heat evolved, and therefore movement due to expansion, mechanical disturbance of the unignited by the projection of the ignited portion into its midst. These conditions may vary much ; the inflammability remains constant.

Mallard and Le Chatelier's results for the true velocity of propagations are :

Velocity of Flame in true explosive Mixtures.
(*Mallard and Le Chatelier.*)

	per sec.
Hydrogen mixture (2 vols. H and 1 vol. O) . . .	20 metres.
Carbonic oxide (2 vols. CO and 1 vol. O) . . .	2·2 ,,

Bunsen's rate for hydrogen mixture seems to have been too great, and for carbonic oxide mixture too little. The rate for a true and very explosive mixture such as hydrogen is liable to be inaccurately determined, as temperature variation makes a great change, and it is difficult even with Mallard and Le Chatelier's method to obtain concordant experiments. With less inflammable mixtures the difficulty disappears. As true explosive mixtures are never used in the gas engine, their properties concern the engineer only as a preliminary to the study of diluted mixtures. The most explosive mixture which can be made with air contains a large volume of nitrogen inevitably present as diluent.

The following are some of their results with diluted mixtures, which are stated to be correct within 10 per cent. error of experiment :

Velocity of Flame in diluted Mixtures. (*Mallard and Le Chatelier.*)

		per sec.
1 vol. hydrogen mixture	+ ½ vol. oxygen . . .	17·3 metres.
,, ,,	+ 1 vol. oxygen . . .	10 ,,
,, ,,	+ ½ vol. hydrogen . . .	18 ,,
,, ,,	+ 1 vol. hydrogen . . .	11·9 ,,
,, ,,	+ 2 vols. hydrogen . . .	8·1 ,,

These rates show that the true explosive mixture of hydrogen and oxygen when diluted with its own volume of oxygen falls from 20 metres per second to 10 metres, that is, it becomes one-half as inflammable ; when its own volume of hydrogen is the diluent, the velocity only falls to 11·9 metres per second. Hydrogen therefore has less effect in diminishing inflammability than oxygen.

Remembering the fact that the atmosphere contains one-fifth of its volume of oxygen, the remaining four-fifths being nearly all nitrogen, it is easy to get the proportions for the strongest explosive mixture possible with air. Two volumes hydrogen require 1 volume oxygen, and therefore 5 volumes air. The strongest possible mixture with air is two-sevenths hydrogen, five-sevenths air. The following experiments are for hydrogen and air in different proportions :

VELOCITY OF FLAME IN DILUTED MIXTURES. (*Mallard and Le Chatelier.*)

	per sec
Mixture, 1 vol. H and 4 vols. air	2 metres.
,, 1 ,, H and 3 vols. air	2·8 ,,
,, 1 ,, H and $2\frac{1}{3}$ vols. air	3·4 ,,
,, 1 ,, H and $1\frac{6}{7}$ vols. air	4·1 ,,
,, 1 ,, H and $1\frac{1}{2}$ vols. air	4·4 ,,
,, 1 ,, H and 1 vol. air	3·8 ,,
,, 1 ,, H and $\frac{1}{3}$ vol. air	2·3 ,,

Very strangely the velocity is greatest when there is an excess of hydrogen present. To get just enough of oxygen for complete burning, 1 volume H requires $2\frac{1}{2}$ volumes air, which would be naturally supposed to be the most inflammable mixture, as it gives out the greatest heat, but for some reason it is not. When the hydrogen is increased beyond 1 volume H to $1\frac{1}{2}$ volumes air the velocity again falls off. A determination for coal gas and air gave 1 volume gas, 5 volumes air a velocity of 1·01 metres per second, and 1 volume gas, 6 volumes air 0·285 metres per second. With coal gas also the maximum velocity is got with the gas slightly in excess.

So far, these rates of ignition or inflammation are measures of inflammability, and are the rates for constant pressure; the rates for constant volume are very different, and the problem is a more complex one. Inflaming at the closed end of the tube, they found that even very dilute mixtures gave a sharp explosion, and in the case of hydrogen true explosive mixture, the velocity became 1000 metres per second instead of 20. With hydrogen and air 300 metres per second were obtained.

MM. Berthelot and Vieille have proved that under certain conditions even greater velocities than these are possible. The conditions, however, are abnormal, and the generation of M. Berthelot's explosive wave is exceedingly undesirable in a gas engine. It is generated by inflaming a considerable portion of the mixture at once, and so causing the transmission of a shock from molecule to molecule of the uninflamed mixture: this shock causes an ignition velocity nearly as rapid as the actual mean velocity of movement of the gaseous molecules at the high temperatures of combustion. The difference between this almost instantaneous detonation and the ordinary flame propagation may be compared to similar differences in the explosion of gun cotton discovered by Sir Frederic Abel. Gun cotton lying loosely, and open to the air, will burn harmlessly if ignited by a flame; indeed, a considerable portion may be laid upon the open hand and ignited by a flame without the smallest danger. The same quantity in the same position, if fired by a percussive detonator, will occasion the most violent explosion, the nature of the shock given to the gun cotton by the detonator causing a transmission of the kind of vibration necessary to cause its almost instantaneous resolution into its component gases.

The explosive wave in gases seems to originate in like conditions. Its velocity for the true explosive mixture of hydrogen and oxygen is 2841 metres per second, and for carbonic oxide mixture, 1089 metres per second. The velocity is independent of pressure between half an atmosphere and one and a half atmosphere. It is independent, too, of the diameter of the tube used, within considerable limits, or of the material of the tube, rubber and lead tubes giving similar results. Diluting the mixtures diminishes, and heating increases it. The experiments are very interesting and important, from a physicist's standpoint, but, fortunately for the inventor dealing with gas engines, the explosive wave is not easily generated in a gas engine cylinder; if it were, it would be impossible to run the engines without shock and hammering.

The velocity which really concerns the engineer is that due to inflammability, and expansion produced by inflaming—the velocity, in fact, with which the inflammation spreads through a closed vessel. As it cannot be discussed without considering other matters—heat evolved by combustion, and temperatures and pressures produced—it will be advisable first to give the heat evolved by combustion, and then devote a complete chapter to explosion in a closed vessel.

HEAT EVOLVED BY COMBUSTION.

Careful experiments upon the heat evolved by the combustion of gases in oxygen have been made by Favre and Silberman, and also by Professor Andrews. The physicists first named burned the gases at constant pressure in a specially devised calorimeter. Professor Andrews mixed the gases in a thin spherical copper vessel, closed it, and exploded by the spark: the vessel being surrounded by water gave up its heat to the water, the weight of which being known, the rise of temperature gave the heat evolved.

Quantities of heat are measured by taking water as the unit. In this work, a heat unit always means the amount of heat necessary to raise unit weight of water through 1° C.

Taking an average of Favre and Silberman and Andrews's results, the inflammable gases used in gas engines evolve upon complete combustion the following amounts of heat :

	Heat units.
Unit weight of hydrogen completely burned to H_2O evolves . .	34,170
Unit weight of carbon completely burned to CO_2 evolves . . .	8,000
Unit weight of carbonic oxide completely burned to CO_2 evolves .	2,400
Unit weight of marsh gas completely burned to CO_2 and H_2O evolves	13,080
Unit weight of ethylene completely burned to CO_2 and H_2O evolves	11,900

That is, one pound weight of hydrogen burned completely to water will evolve as much heat as would raise 34,170 lbs. of water through 1° C., or the converse. One pound of carbon in burning to carbonic acid evolves as much heat as would raise 8,000 lbs. of water through 1° C. These numbers give the amount or quantity of heat evolved. The intensity or temperature of the combustion may be calculated on the assumption that the whole heat is evolved under such conditions that no heat is lost, or is applied to anything else but the products of combustion. To make the calculation it is necessary to know the specific heat of the products.

The amount of heat required to heat unit weight of water through one degree is 1 heat unit, the specific heat of any other body is the number of heat units required to heat unit weight of the body through one degree. Gases have two different specific heats depending upon whether heat is applied while the gas is kept at constant volume, or at constant pressure; both are required in dealing with gas engine problems. The specific heat at constant volume is sometimes known as the true specific heat; in taking the specific heat at constant pressure the gas necessarily expands, and so does work on the external air; this specific heat is therefore greater than the former by the amount of work done. For the gases used in the gas engine the two values are as follows. The ratio between the two is also given, as it is frequently required in efficiency calculations. The experimental numbers are Regnault's, the calculated specific heat at constant volume, Clausius.

SPECIFIC HEATS OF GASES.

(*For equal weights. Water* = 1.)

Name of gas	Sp. heat at constant pressure	Sp. heat at constant volume	$\frac{\text{Sp. heat con. pres.}}{\text{Sp. heat con. vol.}}$
Air	0·237	0·168	1·413
Oxygen . . .	0·217	0·155	1·403
Nitrogen . . .	0·244	0·173	1·409
Hydrogen . . .	3·409	2·406	1·417
Marsh gas . . .	0·593	0·467	—
Ethylene . . .	0·404	0·332	1·144
Carbonic oxide . .	0·245	0·173	1·416
Steam	0·480	0·369	1·302
Carbonic acid . .	0·216	0·171	1·165

It is convenient to remember that the specific heats of combining or atomic weights of the elements are equal—Dulong and Petit's law. To this law there are few exceptions, and the permanent elementary gases, oxygen, nitrogen, and hydrogen, obey it almost absolutely. As equal volumes of these gases represent the combining weights, it follows that equal volumes of these gases have the same specific heat. Taking the specific heat of air as the unit, the specific heat of hydrogen and oxygen gases is also unity. The compound gases do not obey the law so closely. The calculation of temperature of combustion can now be made. The amount of heat evolved from unit weight of a combustible is usually said to measure its calorific power, that amount divided by the specific heat of the products of the combustion is said to be the measure of its calorific intensity. The calorific intensity is indeed the theoretical temperature of the combustion: taking hydrogen first, unit weight evolves 34,170 heat units. But the water formed weighs 9 units (from formula H_2O), and if its specific heat in the gaseous state were unity, the supposed maximum temperature of combustion would be $\frac{34170}{9} = 3796{\cdot}6$. But the specific heat is less than unity; therefore the theoretical maximum will be greater. It is $\frac{34170}{9 \times 0{\cdot}480} = 7909{\cdot}7$. For certain reasons to be considered later, no such enormous temperatures are ever attained by combustion. In the above calculation the latent heat of steam should first have been deducted, as it is included in the total heat evolved as measured by the calorimeter: it is 537 heat units. $34{,}170 - 537$ gives the total heat available for increasing the temperature, the amended calculation is $\frac{34170 - 537}{9 \times 0{\cdot}480} = 7785{\cdot}4$, still an exceedingly high temperature.

Calculating the heat evolved by burning carbon in the same way, but omitting any deduction for the latent heat of carbonic acid (it does not affect the calorimeter, as it does not condense), the theoretical temperature produced by burning in oxygen is still higher, being 10,174° C. Burning in air the theoretical temperatures are lower as the nitrogen present acts as a diluent, and must necessarily be heated to the same temperature as the products of the combustion. They are given as follows in 'Watts' Dictionary.'

	Calorific power	Temperature produced	
		In oxygen	In air
Carbon	8080	10174° C.	2710° C.
Hydrogen	34462	6930° C.	2741° C.

These are the supposed temperatures burning in the open atmosphere, and therefore at constant pressure, the gases expanding doing work upon the air. At constant volume, that is, burning in a closed vessel so that the volume cannot increase but only the pressure, the temperature should be greater as the specific heat at constant volume is less. Allowing for that, the numbers become

THEORETICAL TEMPS. OF COMBUSTION AT CONSTANT VOLUME.

	Temperature produced	
	In oxygen	In air
Carbon	12820	—
Hydrogen	9010	4119

Such temperatures have never been produced by combustion, for many reasons, of which all save the most potent have been discussed by the earlier writers on heat. This is Dissociation.

DISSOCIATION.

Most chemical combinations, while in the act of formation from their constituent elements, evolve heat, and as a general rule, the greater the heat evolved the more stable is the compound formed. The compound after formation may generally be decomposed by heating to a high enough temperature, heat being one of the most powerful splitting up agencies known to the chemist. The nature of the decomposition varies with the compound. In many cases the process is irreversible, that is, although heating up will cause decomposition, cooling down again, however slowly, will not cause recombination. In some compounds, however, under certain conditions the process is reversible, and recombination occurs on slow cooling.

Definition.—Dissociation may be defined as a chemical decomposition by the agency of heat, occurring under such conditions that upon lowering the temperature the constituents recombine.

Groves found long ago that water begins to split up into oxygen and hydrogen gases at temperatures low compared to that produced by combustion. Deville made a careful study of the phenomena, and found that decomposition commences at 960° to 1000° C. and proceeds to a limited extent : raising the temperature to 1200° C. increases it, but a limit is reached. The amount of decomposition depending upon the temperature, for each temperature there is a certain proportion between the amount of steam and the amount of free oxygen and hydrogen gases present. If the temperature is increased, the proportion of free gases also increases : if temperature is diminished, the proportion of free gases diminishes. If the temperature be raised beyond a certain intensity, the water is completely decomposed : if lowered beyond a certain temperature, complete combination results. The same thing happens with carbonic acid, the temperature of decomposition is lower.

It is quite evident, then, that at the highest temperatures produced by combustion, the product cannot exist in the state of complete combination. It will be mixed to a certain extent with the free constituents which cannot combine further until the temperature falls; as the temperature falls, combustion will continue till all the free gases are combined. The subject, from its nature, is a difficult one in experiment, and accordingly different observers do not quite agree upon temperatures and percentages of dissociation, but all are agreed that dissociation places a rigid barrier in the way of combustion at high temperatures, and prevents the attainment of temperatures, by combustion, which are otherwise quite possible. With no dissociation, hydrogen burning in oxygen should be able under favourable circumstances to give a temperature of over 6000° C., as has been shown. Deville's experiments upon the temperature of the oxyhydrogen flame, at constant pressure of the atmosphere, gave under 2500° C. The estimate was made by melting platinum in a lime crucible, with the oxyhydrogen flame playing upon the platinum, the crucible being well protected against loss of heat by lime blocks, so that the platinum could really attain the temperature of the flame; when at the highest temperature, the molten platinum was rapidly poured into a weighed calorimeter, and the rise in temperature noted. From this was calculated the temperature of the platinum. The experiment was dangerous and inaccurate, but it is the only serious attempt which has been made to determine the temperature of the oxyhydrogen flame at constant pressure.

The highest temperature produced by hydrogen burning in oxygen has been determined by Bunsen, and also Mallard and Le Chatelier, for combustion at constant volume, that is, explosion.

As the theoretic calculation shows, with no dissociation a temperature of 9000° C. is possible. The highest maximum it is possible to assume from Bunsen's experiments is 3800° C.; from Mallard and Le Chatelier's, 3500° C. The two sets of experiments are concordant. It is true the latter physicists do not attribute the difference wholly to dissociation, but they agree that part is due to this cause; and that there is an enormous difference between heat temperature actually got and that which should be possible if no limit existed all are agreed. With air, Bunsen's figures show a maximum of about 2000° C., Mallard and Le Chatelier say 1830° C.; the present writer has also made experiments with hydrogen in air, and finds the highest possible temperature to be 1900° C. The calculated maximum is 4119° C. The difference is not so great as with the true explosive mixture, which is to be expected, but all experiments agree in proving that there is a considerable difference.

CHAPTER VI.

EXPLOSION IN A CLOSED VESSEL.

THE value of any inflammable gas for the production of power by explosion, can be determined apart altogether from theoretical considerations by direct experiment. It is evident that the gas which for a given volume causes the greatest increase in pressure, will give the greatest power for every cubic foot used, provided that the pressure does not fall so suddenly that it is gone before it can be utilised by the piston.

Two qualities will be possessed by the best explosive mixture : (1) greatest pressure per unit volume of gas: (2) longest time of maximum pressure when exposed to cooling.

In the gas engine itself the conditions are so complex that the problem is best studied in the first instance under simplified conditions. The author has made a set of experiments upon many samples of coal gas mixed with air in varying proportions, to find the pressures produced, and the duration of those pressures; igniting mixtures at atmospheric pressures and temperature, and also at higher temperature and initial pressures. He has made some experiments upon pure hydrogen and air mixtures in the same apparatus for comparison.

The experimental apparatus is shown at fig. 19. It consists of a closed cylindrical vessel 7 inches diameter and 8¼ inches long, internal measurement, and therefore of 317 cubic inches capacity. It is truly bored, and the end covers turned so that the internal surface is similar to that of an engine cylinder ; the covers are bolted strongly so as to withstand high pressures. Upon the upper cover is placed a Richards indicator, in which the reciprocating drum has been replaced by a revolving one; the rate of revolution is adjusted by a small fan, a weight and gear giving the power.

The cylinder is filled with the explosive mixture to be tested; the drum is set revolving, the pencil of the indicator pressed gently against it, and the electric spark is passed between the points placed at the bottom of the space. The drum is enamelled and the pencil is a black-lead one. The pressure of the explosion acts upon the indicator piston, and a line is traced upon the drum, which shows the rise and fall of pressure. The rising line traces the progress of the explosion; the falling line the progress of the loss of pressure by cooling. The rate of the revolution of the drum being known, the interval of time elapsing between any two points of the explosion or cooling curve is also known. That is, the curve shows the maximum pressure attained, the time of attaining it, and the time of cooling. Line *b* on fig. 20 is a fac-

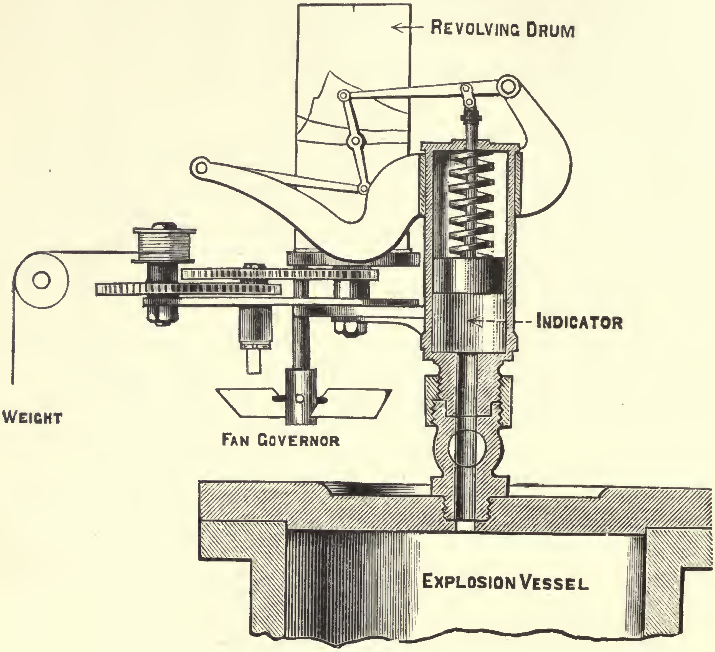

FIG. 19.—Clerk Explosion Apparatus.

simile of the curve produced by the explosion of a mixture containing 1 vol. hydrogen and 4 vols. air. Each revolution of the drum was accomplished in 0·33 sec., so that each tenth of a revolution takes 0·033 sec. The vertical divisions give time; the horizontal, pressures. In this experiment the maximum pressure produced by the explosion is 68 lbs. per square inch above atmosphere, and it is attained in 0·026 second. Compared with the rate of increase the subsequent fall is very slow. The rise occurs in 0·026 second; the fall to atmosphere again takes 1·5 second, or nearly sixty times the other. It is in fact an indicator diagram from an explosion where the volume is constant, the motor piston being absent, and the only cause of loss of pressure is cooling by the enclosing walls. The exact composition of the mixture, its uniform admixture, the temperature and pressure before ignition, are all accurately known. After studying explosions under these known conditions, it becomes easier to understand what occurs under more complex conditions, where the moving piston makes the cooling surface change, and where the expansion doing work also requires consideration. As the rapidity of the increase of pressure measures the explosiveness of a mixture, the time occupied from the commencement of increase to maximum pressure will be called the *time of explosion*. The explosion is complete when maximum pressure is attained. It does not follow from

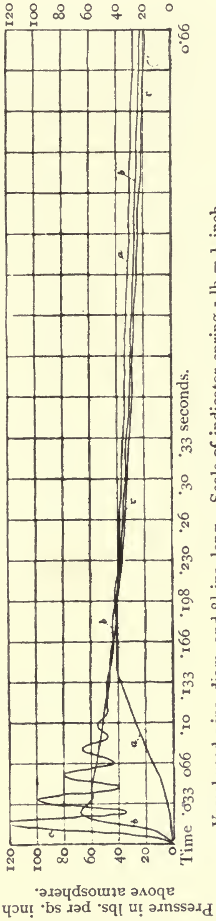

Vessel used 7 ins. diam. and 8¼ ins. long. Scale of indicator spring 1 lb.=$\frac{1}{48}$ inch. Mixtures used pure hydrogen and air—Experiment *a*, 1 vol. hydrogen to 6 vols. air; *b*, 1 to 4; *c*, 1 to 5. Temperature of gases before ignition 16°C.; pressure (atmospheric) 14·7 lbs.

FIG. 20.—Explosion of Gaseous Mixtures. Experiments in a closed vessel.

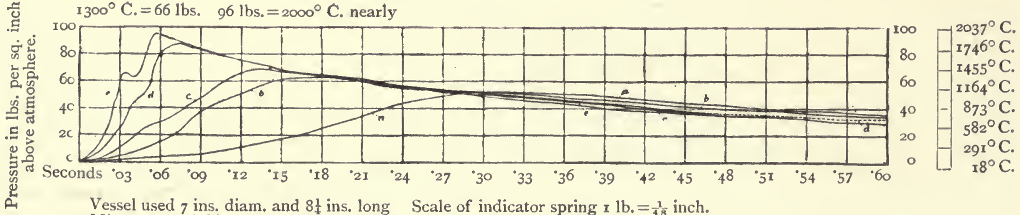

Vessel used 7 ins. diam. and 8¼ ins. long Scale of indicator spring 1 lb. = $\frac{1}{48}$ inch.
Mixtures used Glasgow coal-gas and air. Experiment *a*, 1 vol. gas to 13 vols. air; *b*, 1 to 11; *c*, 1 to 9; *d*, 1 to 7; *e*, 1 to 5.
Temperature of gases before ignition, 18° C.; pressure atmospheric.

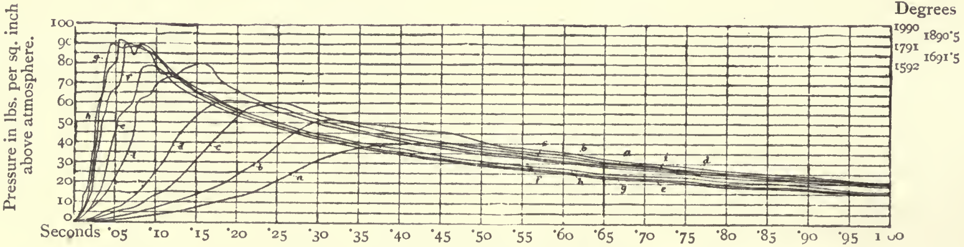

Vessel used 7 ins. diam. and 8¼ ins. long. Scale of indicator spring 1 lb. = $\frac{1}{32}$ inch.
Mixtures used Oldham coal-gas and air. Experiment *a*, 1 vol. gas to 14 vols. air, temp. (of explosion and measuring vessels) 18° C.; *b*, 1 to 13, 16·2°; *c*, 1 to 12, 16°; *d*, 1 to 11, 16·1°; *e*, 1 to 9, 16·7°; *f*, 1 to 7, 16·7°; *g*, 1 to 6, 16°: *h*, 1 to 5, 16°; *i*, 1 to 4, 19°.
Centigrade temperatures, assuming no loss of volume, owing to combination of mixtures. Atmospheric pressure, 14·7 lbs., and mean temperature before ignition, 17° C.

FIG. 21.—Explosion of Gaseous Mixtures. Experiments in a closed vessel.

this that the combustion is complete; that is another matter. The explosion arises from the rapid spreading of the flame throughout the whole mass of the mixture, which may be called the inflammation of the mixture. More or less rapid inflammation means more or less explosive effect, but not complete combustion. The complete burning of the gases present does not occur till long after complete inflammation.

The terms *combustion*, *explosion*, and *inflammation* will be used in this sense alone :

Combustion, burning ; complete combustion, the complete burning of the carbon of the combustible gas to carbonic acid, and the hydrogen to water. So long as any portion of the combustible remains uncombined with oxygen the combustion is incomplete.

Complete explosion, the attainment of maximum pressure.

Time of explosion; the time elapsing between beginning of increase and maximum pressure.

Complete inflammation, the complete spreading of the flame throughout the mass of the mixture.

Confusion has arisen through the indifferent use of these terms, which are really distinct and are not synonymous.

With mixtures made with Glasgow coal gas the author has obtained the following maximum pressures and times of explosion.

EXPLOSION IN A CLOSED VESSEL. (*Clerk.*)

Mixtures of air and Glasgow coal gas.

Temp. before explosion . . . . 18° C.
Pressure before explosion . . . . . . atmospheric.

Mixture		Max. press. above atmos. in pounds per sq. in.	Time of explosion
Gas.	Air.		
1 vol.	13 vols.	52	0·28 sec.
1 vol.	11 vols.	63	0·18 sec.
1 vol.	9 vols.	69	0·13 sec.
1 vol.	7 vols.	89	0·07 sec.
1 vol.	5 vols.	96	0·05 sec.

The highest pressure which any mixture of coal gas and air is capable of producing without compression is only 96 lbs. per sq. in. above atmosphere and the most rapid increase is not more rapid than always occurs in a steam cylinder at admission. Many are still prejudiced against gas, compared with steam, because of the so-called explosive effect, and the fear that gas explosions may occasion pressures quite beyond control, like solid explosives. The fear is quite unfounded; the pressure produced by the strongest possible mixture of coal gas and air is strictly limited by the pressure before ignition, and can always be accurately known; and so provided for by a proper margin of safety in the cylinders and other parts subject to it.

The most dilute mixture of air and Glasgow gas which can be ignited at atmospheric pressure and temperature contains $\frac{1}{14}$ of its volume of gas, and the pressure produced is 52 lbs. above atmosphere. The time of explosion is 0·28 second; so slow is the rise that it cannot with justice be termed an explosion. It is too slow to be of any use in an engine running at any reasonable speed; the stroke would be almost complete before the pressure had risen. The mixture containing $\frac{1}{6}$ of its volume of gas is that with just enough oxygen to burn the gas. It is anomalous that the highest pressure is given with excess of coal gas. The rate of ignition also is greatest with that mixture. This agrees with the results obtained by Mallard and Le Chatelier, excess of hydrogen giving the highest rate of inflammation.

Similar experiments were made with air and Oldham coal gas.

EXPLOSION IN A CLOSED VESSEL. (*Clerk.*)

Mixtures of air and Oldham coal gas.

Temp. before explosion . . . . 17° C.
Pressure before explosion . . . . atmospheric.

Mixture		Max. press. above atmos. in pounds per sq. in.	Time of explosion
Gas.	Air.		
1 vol.	14 vols.	40	0·45 sec.
1 vol.	13 vols.	51·5	0·31 sec.
1 vol.	12 vols.	60	0·24 sec.
1 vol.	11 vols.	61	0·17 sec.
1 vol.	9 vols.	78	0·08 sec.
1 vol.	7 vols.	87	0·06 sec.
1 vol.	6 vols.	90	0·04 sec.
1 vol.	5 vols.	91	0·055 sec.
1 vol.	4 vols.	80	0·16 sec.

The highest pressure in this case is 91 lbs. per square inch above atmosphere, but the most rapid explosion is 0·04 second and 90 lbs. pressure, a little less pressure than is given by Glasgow gas but a slightly more rapid ignition. The mixtures are evidently more inflammable, as the critical mixture is $\frac{1}{15}$ volume of gas instead of $\frac{1}{14}$ as with Glasgow gas. Although repeatedly tried, a mixture of 1 volume gas 15 volumes air failed to inflame with the spark.

Hydrogen and air mixtures were also tested as follows :

EXPLOSION IN A CLOSED VESSEL. (*Clerk.*)

Mixtures of air and hydrogen.

Temp. before explosion . . . . 16° C.
Pressure before explosion . . . . atmospheric.

Mixture		Max. press. above atmos. in pounds per sq. in.	Time of explosion
Hyd.	Air.		
1 vol.	6 vols.	41	0·15 sec.
1 vol.	4 vols.	68	0·026 sec.
2 vols.	5 vols.	80	0·01 sec.

The inferiority of hydrogen to coal gas, volume for volume, is very evident ; the highest pressure is only 80 lbs. above atmosphere, and the mixture requires $\frac{2}{5}$ of its volume of hydrogen to give it, while coal gas gives the same pressure with about $\frac{1}{10}$ volume. The hydrogen mixture, too, ignites so rapidly that it would occasion shock in practice, the strongest mixture having an explosion time of one-hundredth of a second. With gas the most rapid is four-hundredths of a second.

THE BEST MIXTURE FOR USE IN NON-COMPRESSION ENGINES.

From these tables can be ascertained the best gas and the best mixture for use in non-compression engines with cylinders kept cold. Take first Glasgow gas, and determine which mixture gives the best result.

(1) Power of producing pressure.

Suppose one cubic inch of Glasgow coal gas to be used in each of the five mixtures, whose maximum pressures and times of explosion are given in the table on p. 99, the mixtures would measure respectively 14, 12, 10, 8, and 6 cubic inches. Let them be placed in cylinders of 14, 12, 10, 8 and 6 square inches piston area ; the piston will in each case be raised one inch from the bottom of its cylinder. If the pressures upon the piston were the same, equal movements of piston would give equal power ; if therefore the mixtures gave equally good results the maximum pressure multiplied by the piston area will in all cases be the same.

Multiplying 14, 12, 10, 8 and 6 by their corresponding pressures 52, 63, 69, 89, and 96 respectively, the products are 728, 756, 690, 712, and 576. These numbers are the pressures in pounds which each mixture is capable of producing with one cubic inch of Glasgow coal gas, cylinders of such area being used that the depth of mixture is in every case one inch.

Proportion of Glasgow gas in mixture	$\frac{1}{14}$,	$\frac{1}{12}$,	$\frac{1}{10}$,	$\frac{1}{8}$,	$\frac{1}{6}$.
Pressure produced upon pistons by one cubic inch . . .	728,	756,	690,	712,	576 pounds.

The best mixture is seen at a glance ; it is that containing one-twelfth of gas. The pressure produced by one cubic inch of gas is at its highest value 756 pounds, in a cylinder of 12 inches piston area, and containing 12 cubic inches of mixture.

In modern gas engines the time taken by the piston to make the working part of its stroke is generally about one-fifth of a second. If the pressure in one mixture has fallen more, proportionally in that time, then although it may give the highest maximum, it may lose too rapidly to give the highest mean pressure. To find this cooling effect, find the pressure to which each mixture falls at the end of 0·2 second after maximum pressure ; it is in the different cases :

Mixture containing gas . . .	$\frac{1}{14}$,	$\frac{1}{12}$,	$\frac{1}{10}$,	$\frac{1}{8}$,	$\frac{1}{6}$.
Time after beginning explosion (0·2 sec. after max. pressure) .	0·48,	0·38,	0·33,	0·27,	0·25 sec.
Pressure in lbs. per sq. in . . .	43,	48,	47,	55,	57.
Press. respectively by 14, 12, 10, 8, and 6	602,	576,	470,	440,	342.

The lower row expresses the relative pressures still remaining after allowing each explosion to cool for one-fifth of a second from complete explosion ; they express the resistance to cooling possessed by the mixtures. It is evident at once that the strongest mixtures cool most rapidly; a higher temperature being produced, more of the heat of the explosion is lost in a given time.

(2) Power of producing pressure and resisting cooling.

To find the best mixture for producing pressure and resisting cooling, those numbers are to be added to the corresponding ones for maximum pressure:

Proportion of Glasgow gas in mixture	$\frac{1}{14}$,	$\frac{1}{12}$,	$\frac{1}{10}$,	$\frac{1}{8}$,	$\frac{1}{6}$.
Pressure produced upon pistons by one cubic inch gas	728,	756,	690,	712,	576.
Pressure remaining upon pistons 0·2 sec. after complete explosion	602,	576,	470,	440,	342.
Mean pressure	665,	666,	580,	576,	459.

The mean of the two sets gives numbers expressing the relative values of the mixture for producing pressure, and at the same time resisting cooling. The two weakest mixtures are best in both respects, the low result given by the strongest mixture is due to the fact that excess of gas is present and it remains unburned, it proves how easily the consumption of an engine may be increased by even a slight excess of gas in the mixture.

The two best mixtures ignite too slowly, but in the actual engine that is easily controlled, as will be explained later. The best mixtures are 1 vol. gas 13 volumes air, and 1 vol. gas 11 volumes air. With more gas the economy will rapidly diminish.

The experiments with Oldham gas treated in the same way give the following results:

Proportion of Oldham gas in mixture	$\frac{1}{15}$,	$\frac{1}{14}$,	$\frac{1}{13}$,	$\frac{1}{12}$,	$\frac{1}{10}$,	$\frac{1}{8}$,	$\frac{1}{7}$,	$\frac{1}{6}$,	$\frac{1}{5}$.
Pressure produced upon pistons by one cubic inch gas	600,	721,	780,	732,	780,	696,	630,	546,	400.
Pressure remaining upon pistons 0·2 sec. after complete explosion per sq. inch	31,	40,	4 ,	44,	44,	47,	52,	50,	46.
Pressure per piston	465,	560,	546,	528,	440,	376,	364,	300,	230.
Mean pressure upon piston	532,	640,	663,	630,	610,	536,	497,	423,	315.

Here, too, the best mixture lies between one-twelfth and one-fourteenth of gas; with less and more gas the result becomes worse and worse. Glasgow and Oldham gases seem to be very nearly equal in value per cubic foot for the production of power, as the pressure produced from one cubic inch in the best mixture of each is very similar. The average pressures during 0·2 second from complete explosion are exceedingly close, Glasgow gas mixture containing one-twelfth gas giving 666 lbs. pressure per cubic inch of gas, and Oldham gas for the same mixture and the same quantity giving 630 lbs.: Glasgow gas one-fourteenth mixture 665 lbs. pressure, Oldham gas 640 lbs. The hydrogen experiments give as follows :

Proportion of hydrogen gas in mixture .	$\frac{1}{7}$,	$\frac{1}{5}$,	$\frac{2}{7}$.
Pressure produced upon pistons by one cubic inch hydrogen	287,	340,	280.
Pressure remaining upon pistons 0·2 sec. after complete explosion per sq. inch.	35,	39,	40.
Pressure per piston . .	245,	195,	140.
Mean pressure upon piston . . .	266,	267,	210.

The best mixture with 1 cubic inch of hydrogen only gives a pressure of 267 lbs. available for 0·2 second, so that its capacity for producing power, compared with Glasgow and Oldham gas, is as 267 is to 665 and 640 respectively. To produce equal power with Glasgow gas nearly two-and-a-half times its volume of hydrogen is required. The idea is very prevalent among inventors that if pure hydrogen and air could be used, greater power and economy would be obtained ; these experiments prove the fallacy of the notion. Hydrogen is the very worst gas which could be used in the cylinder of a gas engine, it is useful in conferring inflammability upon dilute mixtures of other gases, but when present in large quantity in coal gas it diminishes its value per cubic foot for power.

PRESSURES PRODUCED IF NO LOSS OR SUPPRESSION OF HEAT EXISTED.

From the fact already mentioned in the last chapter, that the theoretical temperatures of combustion are never attained in reality, it will naturally be expected that the pressures produced by explosions in closed vessels will also fall short of theory. This is found to be the case. It has been observed by every experimenter upon the subject, beginning with Hirn in 1861, who determined the pressures produced by the explosion of coal gas and air, and hydrogen and air. He used two explosion vessels of 3 and 36 litres capacity; they were copper cylinders with diameters equal to their length. He used a Bourdon spring manometer to register the pressure. He states that:

(1) With 10 per cent. hydrogen introduced the results were: according to experiment, 3·25 atmospheres; according to calculation, 5·8 atmospheres.

(2) With 20 per cent. of hydrogen, the results were: according to experiment, 7 atmospheres, which is very much below the calculation.

(3) With 10 per cent. of lighting gas introduced the results were: according to experiment, 5 atmospheres, *i.e.* much more than with the introduction of an equal volume of pure hydrogen.

He notices especially the low pressure produced by hydrogen as compared with lighting gases, but observes truly that this should not excite surprise—although the heat value of hydrogen is great, yet it is so when compared with equal weights of other substances—and that coal gas being four or five times as heavy as hydrogen, quantity is balanced against quality; therefore volume for volume it gives out more heat.

He considers that there is no difficulty in explaining the very considerable difference found between calculation and experiment, as the metal sides are at so low a temperature compared with the explosion, that the heat is rapidly conducted away, and the attainment of the highest temperature is impossible. Bunsen, in his experiments, observed the same difference, and so later did Mallard and Le Chatelier. The author's experiments fully confirm the accuracy of those observers. In no case, whether with weak or strong mixtures of coal gas and air, or hydrogen and air, is the pressure produced which should follow the complete evolution of heat.

Thus, with hydrogen mixtures (*Clerk's experiments*):

	Per sq. in.		
1 vol. H 6 vols. air gives by experiment . .	41	lbs. above	atmosphere.
The calculated pressure is	88·3	,,	,,
1 vol. H 4 vols. air experiment gives . . .	68	,,	,,
Calculated pressure is	124	,,	,,
2 vols. H 5 vols. air experiment gives . .	80	,,	,,
Calculated pressure is	176	,,	,,

Without exception the actual pressure falls far short of the calculated pressure; in some manner the heat is suppressed or lost. That the difference cannot altogether be accounted for by loss of heat is easily proved; the fall of pressure is so slow from the maximum that it is impossible that any considerable proportion of heat can be lost in the short time of explosion. If so large a proportion were lost on the rising curve, it could not fail to show upon the falling curve; it would fall in fact as quickly as it rose. Again, the increase of pressure would be less in a small than in a large vessel, as the small vessel exposes the larger surface proportionally to the gas present. It is found that this is not so. Bunsen used a vessel of a few cubic centimetres capacity, and got with carbonic oxide and oxygen true explosive mixture 10·2 atmospheres maximum pressure; Berthelot with a vessel 4000 cb. c. capacity got 10·1 atmospheres; with hydrogen true explosive mixture Bunsen 9·5 atmospheres, Berthelot, 9·9 atmospheres. All the difference, therefore, cannot be accounted for by loss before complete explosion.

Mixtures of air and coal gas give similar results.

The following are the observed and calculated pressures for Oldham coal gas. (*Clerk's experiments.*)

	Per sq. in.		
1 vol. gas 14 vols. air, experiment gives . .	40	lbs.	above atmosphere
Calculated pressure is	89·5	,,	,,
1 vol. gas 13 vols. air, experiment gives . .	51·5	,,	,,
Calculated pressure is	96	,,	,,
1 vol. gas 12 vols. air, experiment gives . .	60	,,	,,
Calculated pressure is	103	,,	,,
1 vol. gas 11 vols. air, experiment gives . .	61	,,	,,
Calculated pressure is	112	,,	,,
1 vol. gas 9 vols. air, experiment gives . .	78	,,	,,
Calculated pressure is	134	,,	,,
1 vol. gas 7 vols. air, experiment gives . .	87	,,	,,
Calculated pressure is	168	,,	,,
1 vol. gas 6 vols. air, experiment gives . .	90	,,	,,
Calculated pressure is	192	,,	,,

The results with Glasgow gas are so similar that it is unnecessary to give a table; in no case does the maximum pressure account for much more than one-half of the total heat present. As all of the deficit cannot have disappeared previous to complete explosion, it follows that the gases are still burning on the falling curve, that is, the falling curve does not truly represent the rate of cooling of air heated to the maximum temperature, because heat is being continually added by the continued combustion of the mixture. This will be fully proved by a study of the curves.

It may, however, be taken as completely proved by the complete accord of all physicists who have experimented on the subject, that for some reason nearly one-half of the heat present as inflammable gas in any explosive mixture, true or dilute, is kept back and prevented from causing the increase of pressure to be expected from it. Although differences of opinion exist on the cause, all are agreed on the fact; they also agree in considering that inflammation is complete when the highest pressure is attained.

TEMPERATURES OF EXPLOSION.

With a mass of any perfect gas confined in a closed vessel the absolute temperatures and pressures are always proportional; double temperature means double pressure. Temperatures T, t (absolute), pressures corresponding P, p; then $\frac{T}{t} = \frac{P}{p}$ (Charles's law). If explosive mixtures behaved as perfect gases, the pressure before explosion and temperature being known, the pressure of explosion at once gives the corresponding temperature. It has been shown at page 82 that explosive mixtures do not fulfil this condition, but change in volume from chemical causes quite apart from physical ones. It follows, therefore, that these changes must be known before the temperature of the explosion can be calculated from the pressure. In the cases of hydrogen and carbonic oxide true explosive mixtures with oxygen, a contraction of volume is the result of combination. It comes to the same thing as if a portion of the perfect gas in the closed vessel was lost during heating; the temperature then could not be known at the higher pressure unless the volume lost is also known.

Suppose one-third of the volume to disappear, upon cooling to the original temperature, the pressure would be reduced to two-thirds of the original pressure, and this fraction of the original pressure must be taken as $p_1 = 10$. As both steam and carbonic acid at temperatures high enough to make them perfectly gaseous occupy two-thirds of the volume of their free constituents, it follows that p_1 must be taken as $\frac{2}{3}\,p$, wherever the temperatures are such that combination is complete. But here another difficulty occurs. Bunsen found that hydrogen and oxygen in true explosive mixtures gave an explosion pressure of 9·5 atmospheres. The calculated pressure for complete combustion, and allowing for chemical contraction is 21·3 atmospheres. It is evident enough that complete combustion has not occurred, but it is difficult to say what fraction remains uncombined. Yet unless the fraction in combination be known the contraction cannot be known, and therefore the temperature corresponding to the pressure cannot be known.

Berthelot has pointed out that in a case of this kind the true temperature cannot be calculated, but it may be shown to lie between two extreme assumptions, both of which are erroneous.

(1) Temperature calculated on assumption of no contraction.

(2) Temperature calculated on assumption of the complete contraction.

Let the two temperatures be (1) T^1 and (2) T.

	T^1	T
2 vols. H, 1 vol. O, explosion pressure (absolute) 9·9 atmospheres . .	2449° C.	3809° C.
2 vols. CO, 1 vol. O, explosion pressure (absolute) 10·8 atmospheres . .	2612° C.	4140° C.

The lower temperature could only be true if no combination whatever had occurred, which is impossible, as then no heat at all could be evolved; the higher temperature could only be true if complete combination, and therefore complete contraction, occurred. The truth is somewhere between these numbers.

When the explosive mixture is dilute, the limits of possible error are narrower, because the possible proportion of contraction is less; with hydrogen and air mixture in proportion for complete combination, 2 volumes of hydrogen require 5 volumes of air. The greatest possible contraction of the 7 volumes is therefore 1 volume. If all the hydrogen burned to steam, the 7 volumes contract to 6 volumes. With more dilute mixtures the proportion diminishes.

With a mixture containing $\frac{1}{5}$ of its volume hydrogen, 10 volumes can only suffer contraction to 9 volumes. With $\frac{1}{7}$ volume hydrogen, 14 volumes can contract to 13 volumes.

The limits of maximum temperatures for those mixtures are as follows (*Clerk*):

	T^1	T
1 vol. H, 6 vols. air, explosion pressure (absolute), 55·7 lbs. per sq. in. . .	826° C.	909° C.
1 vol. H, 4 vols. air, explosion pressure (absolute), 82·7 lbs. per sq. in. . .	1358° C.	1539° C.
2 vols. H, 5 vols. air, explosion pressure (absolute), 94·7 lbs. per sq. in. . .	1615° C.	1929° C.

The possible error is here much less than with true explosive mixtures; coal gas is of such a composition that some of its constituents expand upon decomposition previous to burning, and so to some extent balance the contraction produced by the burning of the others. The possible error is therefore still further reduced. The composition of Manchester coal gas as determined by Bunsen and Roscoe is as below. The oxygen required for the complete combustion of each constituent is also given, and the volumes of products formed.

ANALYSIS OF MANCHESTER COAL GAS. (*Bunsen and Roscoe.*)

		Amount required for complete combustion	Products
	vols.	vols. O	vols.
Hydrogen, H . , .	45·58	22·79	45·58, H_2O
Marsh gas, CH_4 . . .	34·9	69·8	104·7, CO_2 & H_2O
Carbonic oxide, CO . .	6·64	3·32	6·64, CO_2
Ethylene, C_2H_4 . . .	4·08	12·24	16·32, CO_2 & H_2O
Tetrylene, C_4H_8 . . .	2·38	14·28	19·04, CO_2 & H_2O
Sulphuretted hydrogen, H_2S	0·29	0·43	0·58, H_2O & SO_2
Nitrogen, N . . .	2·46	—	2·46
Carbonic acid, CO_2 . .	3·67	—	3·67
Total	100·00	122·86 O	198·99, CO_2 H_2O & SO_2

When burned in oxygen 100 volumes of this sample of gas require 122·86 volumes of oxygen, total mixture 222·86 volumes; the products of the combustion measure 198·99 volumes. Calculating to percentage, 100 volumes of the mixture will contract to 89·4 volumes of the products. As 100 volumes of the mixture will contain 55·1 volumes of oxygen, it follows that if air be used, four times that volume of nitrogen will be associated with it, that is, 55·1 × 4 = 220·4. The strongest possible explosive mixture of this coal gas with air containing 100 volumes of the true explosive mixture will be 320·4 volumes, and it will contract upon complete combustion to 309·8 volumes.

One volume of this gas requires 6·14 volumes air for complete combustion, and 100 volumes of the mixture contract to 96·6 volumes of products and diluent. A contraction of 3·4 per cent. Dilution still further diminishes the change; thus a mixture, 1 volume gas 13·28 volumes air, will have only half that contraction, or 1·7 per cent.

From these figures it is evident that the limits of possible error in calculating temperature from pressure of explosion does not exceed, in the worst case, with coal gas and air 3·4 per cent., and in weaker mixtures half that number. The fact that the whole heat is not evolved at the explosion pressure, and that therefore the whole contraction does not occur then, further reduces the error. It is then nearly correct to calculate temperature from pressure without deduction for contraction. This has been done for Glasgow gas and for the Oldham gas experiments by the author.

EXPLOSION IN A CLOSED VESSEL. (*Clerk.*)

Mixtures of air and Glasgow coal gas.

Temp. before explosion	18° C.
Pressure before explosion	atmos. 14·7 lbs.

Mixture		Max. press. above atmos. in pounds per sq. in.	Temp. of explosion calculated from observed pressure
Gas.	Air.		
1 vol.	13 vols.	52	1047° C.
1 vol.	11 vols.	63	1265° C.
1 vol.	9 vols.	69	1384° C.
1 vol.	7 vols.	89	1780° C.
1 vol.	5 vols.	96	1918 C.

Mixtures of air and Oldham coal gas.

Temp. before explosion . . . . 17° C.

Mixture		Max. press. above atmos. in pounds per sq. in.	Temp. of explosion calculated from observed pressure	Theoretical temp. of explosion if all heat were evolved
Gas.	Air.			
1 vol.	14 vols.	40	806° C.	1786° C.
1 vol.	13 vols.	51·5	1033° C.	1912° C.
1 vol.	12 vols.	60	1202° C.	2058° C.
1 vol.	11 vols.	61	1220° C.	2228° C.
1 vol.	9 vols.	78	1557° C.	2670° C.
1 vol.	7 vols.	87	1733° C.	3334° C.
1 vol.	6 vols.	90	1792° C.	3808° C.
1 vol.	5 vols.	91	1812° C.	
1 vol.	4 vols.	80	1595° C.	

Those temperatures calculated from maximum pressure, although not quite true are very nearly so, whatever be the theory adopted to explain the great deficit of pressure. It does not follow, however, that they are the highest temperatures existing at the moment of explosion ; they are merely averages. The existence of such an intensely heated mass of gas in a cold cylinder causes intense currents, so that the portion in close contact with the cold walls will be colder than that existing at the centre. There will be a hot nucleus of considerably higher temperature than that outside, but whatever that temperature may be, the increase of pressure gives a true average. It may be taken, then, that coal gas mixtures with air give upon explosion temperatures ranging from 800° C. to nearly 2000° C., depending on the dilution of the mixture. The more dilute the mixture the lower the maximum temperature ; increase of gas increases maximum temperature at the same time as it increases inflammability.

The author has made explosion experiments in the same vessel with mixtures previously compressed, and finds that the pressures produced with any given mixture are proportional to the pressure before ignition, that is, with a mixture of constant composition, double the pressure before explosion, keeping temperature constant at 18° C., doubles the pressure of explosion. The experiments are laborious, and they are not yet complete for publication, but the general principles already developed are true for compressed mixtures also.

EFFICIENCY OF GAS IN EXPLOSIVE MIXTURES.

Rankine defines available heat as follows :

'The available heat of combustion of one pound of a given sort of fuel is that part of the total heat of combustion which is communicated to the body to heat which the fuel is burned ; and the efficiency of a given furnace, for a given sort of fuel, is the proportion which the available heat bears to the total heat.'

The gas engine contains furnace and motor cylinder in one ; nevertheless the efficiency of the working fluid is quite as distinct from the furnace efficiency as in the steam engine. Rankine's definition is quite true for the gas engine.

The fuel being gas, the working fluid consists of air and its fuel and their combinations ; the available heat is that part of the heat of combustion which serves to raise the temperature of the working fluid ; the part which flows into it to make up for loss to the cold cylinder walls cannot be considered available. To be truly available it must either increase temperature, or keep it from falling by expansion. The heat flowing through the cylinder walls is a furnace loss, incident to the explosion method of heating.

The experiments upon explosion in a closed vessel provide data for determining the furnace efficiency as distinguished from that of the working fluid. The proportion of heat flowing from an explosion to the walls in unit time will depend upon the surface of the walls for any given volume. The smaller the cooling surface in proportion to volume of heated gases, the slower will be the rate of cooling. Therefore to be applicable to any engine, the explosion vessel in which the experiments are made should have the same capacity and surface as the explosion space of the engine.

The author's experiments are therefore only strictly applicable to engines with cylinders similar to his explosion vessel. Within certain limits, however, the error introduced by applying them to other engines is inconsiderable.

Assuming the stroke of a gas engine (after explosion) to take 0·2 second, this may be taken as the time during which the pressure of explosion must last if it is to be utilised by the engine. In a closed vessel the pressure falls considerably in 0·2 second, the average pressure may be taken as nearly indicating the available pressure during that time. The heat necessary to produce that pressure is the available heat ; and its proportion to the total heat which the gas present in the mixture can evolve is the efficiency of the gas in that explosive mixture.

With Oldham gas the best mixture is (table, p. 103) 1 volume gas 12 volumes air ; the average pressure during the first fifth of a second is 51 lbs. per square inch above atmosphere. If all the heat present heated the air, the pressure should be 103 lbs. effective, so that the efficiency of the heating method is $\frac{51}{103} =$ 0·49.

The strongest mixture which still contains oxygen in excess is 1 volume gas 7 volumes air, the average available pressure is 67 lbs. per square inch (all heat evolved would give 168 lbs.), the efficiency is $\frac{67}{168} =$ 0·40 nearly.

Calculated in this way the efficiency values for Oldham gas mixtures are :

Prop. of Oldham gas in mixture .	$\frac{1}{15}$,	$\frac{1}{14}$,	$\frac{1}{13}$,	$\frac{1}{12}$,	$\frac{1}{10}$,	$\frac{1}{8}$,	$\frac{1}{7}$.
Heating efficiency . . .	0·40,	0·48,	0·50,	0·43,	0·46,	0·40,	0·37.

The furnace efficiency plainly diminishes with increased richness of the mixture in gas.

TIME OF EXPLOSION IN CLOSED VESSELS.

The rates of the propagation of flame in explosive mixtures given in tables, pages 86 and 87, are true only where the inflamed portion is free to expand without projecting itself into the unignited portion. They are the rates proper for constant pressure.

Where the volume is constant, in a closed vessel, the part first inflamed instantly expands and so projects the flame surface into the mass, compressing what remains into smaller space.

To the rate of inflammation at constant pressure are added the projection of the flame into the mass by its expansion and also the increased rate of propagation in the unignited portion by the heating due to its compression by portion first inflamed.

It follows that the rate continually increases, as the inflammation proceeds until it fills the vessel.

This is evident from all the explosion curves. The pressure rises slowly at first, then with ever increasing rate till the explosion is complete; thus the explosion curve for hydrogen mixture with air $\left(\frac{2}{7}\ \mathrm{H}\right)$, shows an increase of 17 pounds in the first 0·005 second, the maximum pressure of 80 pounds being attained in the next 0·005 second. With the weaker mixtures the same thing occurs, rise of pressure, slow at first, then more rapid, and in some cases becoming slow again before maximum pressure. The time taken to get maximum pressure varies much with the circumstances attending the beginning of the ignition. If a considerable mass be ignited at once, by a long and powerful spark, or by a large flame, the ignition of the weakest mixture may be made almost indefinitely rapid. Something very like Berthelot's explosive wave may result. This is due to the great mechanical disturbance caused by the rapid expansion of the portion first ignited; the smaller that portion is the more gently does the flame spread. A small separate chamber connected with the main vessel, if filled with explosive mixture and ignited, will project a rush of flame into the main vessel and cause almost instantaneous ignition. The shape of the vessel, too, has a great effect upon the rate. Where it is cylindrical and large in diameter proportional to its axial length, ignition is extremely rapid, the flame is confined at starting, and is rapidly deflected by the cylinder ends, and so shoots through the whole mass.

By so arranging the explosion space of a gas engine that some mechanical disturbance is permitted, it is easy to get any required rate of ignition even with the weakest mixtures.

The maximum pressure is not increased by rapid ignition.

Starting the ignition from a small spark, the time taken to ignite increases with the volume of the vessel.

Berthelot has experimented upon this point with explosion vessels of three capacities, 300 cubic centimetres, 1500 cubic centimetres, and 4000 cubic centimetres. He finds time of explosion (he also takes maximum pressure to indicate complete explosion) of mixture 2 vols. H, 1 vol. O, and 2 vols. N, in 300 cubic centimetre vessel, 0·0026 second; and in 4000 cubic centimetre vessel, 0·0068 second.

With mixture of carbonic oxide and oxygen, 2 vols. CO, 1 vol. O, smaller vessel, 0·0128 second; larger vessel, 0·0155 second. Mixtures with air were much slower. The conclusion then is obvious, that in large engines the time of explosion will be longer than in small ones.

CHAPTER VII.

THE GAS ENGINES OF THE DIFFERENT TYPES IN PRACTICE.

HAVING now studied the theoretic efficiency of the different kinds of engine and the mechanism of the heating method—that is the properties of gaseous explosions—the way is clear for the study of the results obtained from the engines in practice.

It is quite evident that no practicable engine can give an efficiency at all approaching theory from the use of gaseous explosions; the temperatures and therefore pressures produced fall far short of that due to the complete evolution of the heat present in the mixture as combustible gas. All the heat of the gas does not go to increase the temperature of the working fluid; a large proportion of it is rendered latent in some way when the maximum temperature is attained.

The appearance of the diagrams from the explosion of mixtures commonly used in gas engines, shows at first a very rapid increase of pressure and temperature, which terminates abruptly and is immediately succeeded by a fall which is relatively a slow one.

It was formerly supposed that the completion of the explosion was coincident with the completion of the combustion, and therefore of the evolution of heat. This, however, was shown by Bunsen and those who have followed him, to be untrue; although the temperature ceases to rise, and fall sets in, the gas present has in few explosions been more than half-burned at the moment of maximum temperature. The causes which suppress the heat of the explosion and prevent it from being evolved at once are complex and have occasioned different explanations which will be fully discussed in a subsequent chapter. Meantime, it is sufficient to recognise the fact and to understand its bearing upon the economy of gas engines.

It is a phenomenon common to all gas engines which have ever been constructed, whether using compression previous to ignition or not. The heat so suppressed appears when cooling sets in, and consequently explosive mixtures cool more slowly in appearance than would a mass of air heated to similar temperatures and exposed to similarly cold enclosing walls.

In many gas engines the indicator diagrams are apparently almost perfect, that is, the lines of falling temperatures are almost true adiabatics. So far as the diagram yields information, the gases in expanding are losing no heat whatever to the cylinder, but the temperature is falling apparently only by work done upon the piston. This supposition is known to be untrue, because the gases are at a temperature often as high as the hottest of blast furnaces, and the walls enclosing are at most at the boiling point of water. It is the suppressed heat which is being evolved during fall of temperature which sustains the temperature and makes the diagram appear as if no loss or but little was going on. An actual engine therefore may give a diagram which is the exact theoretical one, and yet the efficiency of the engine be much below theory. The author's experiments upon explosive mixtures were undertaken to get the data necessary for the interpretation of the diagram, and the rising and falling curves, showing times of rise and fall of pressure, give the efficiency of coal gas in the different mixtures, apart altogether from theoretic considerations. Whatever the opinions held regarding the cause or causes of the suppression of heat, the experiments with carefully proportioned explosive mixtures, at known temperatures and pressures, determine absolutely the capability of gas for producing pressure and for sustaining it under cooling.

As the efficiency may be very different from that shown by the indicator, it is advisable to distinguish between the real and apparent efficiency. Call the one *apparent indicated* efficiency, and the other *actual indicated* efficiency.

The apparent indicated efficiency, when multiplied by the efficiency of the gas in the particular mixture used, will give the actual indicated efficiency. For instance, if the diagram gave the efficiency of an engine as 0·29 and the efficiency of the mixture was 0·48, then the actual indicated efficiency is 0·29 × 0·48 = 0·11. That is, only

0·48 of the gas present when the diagram is taken really acts in producing elevation of temperature; the remaining 0·52 is suppressed and keeps up the temperature, which would otherwise fall by cooling. The diagram alone can never tell accurately the losses which are taking place unless the heat is all evolved at once and appears in temperature; then, but not till then, will the lines traced by the indicator tell the loss of heat. Some previous writers have misinterpreted their indicator diagrams through neglect of this fact.

Some others, notably Dr. Slaby, of Berlin, have assumed that the phenomenon of retarded combustion is produced by invention and occurs only in the Otto engine. This is a mistake. All engines using explosion necessarily exhibit it ; in fact, as it is an accompaniment of all explosions, it is impossible to make an engine in which it is avoided.

In the following examination of the performances of the various engines in practice the importance of the phenomenon will appear.

Type 1.—The most important engines of this type which have yet been in public use are those of Lenoir, Hugon, and Bisschoff. Many others have been made and sold in some numbers, but as these three present fully all the peculiarities of the type, it would only waste time to describe the varied mechanical details constituting the sole novel points in the others.

LENOIR ENGINE.

The Lenoir engine as made differs considerably from that described in his specifications. As a rule of almost general application, specifications are untrustworthy as accurate descriptions of working machines ; the author has been careful to describe no engine which he has not examined.

Fig. 22 is a section of the cylinder of a half-horse power Lenoir engine. The engine in the Patent Office Museum, South Kensington, is well made and in external appearance closely resembles an ordinary high-pressure steam engine.

The cylinder is 5½ inches diameter, and the stroke is 8½ inches. Its cylinder is provided with two valves ; both are slides, working between the cylinder faces and covers, which are held down to the slides by adjusting screws. One valve controls the discharge of the products of combustion, the other, the admission and mixing of the inflammable gas and air. The ignition is effected by the electric spark. The working cycle of the engine is as follows :

When the piston is at the end of its stroke, the gas and air admission valve is open ; the main port in it opens to the atmosphere, while a smaller port leads from the main port to the gas supply. The forward movement of the piston draws into the cylinder the air and the gas, which mix as they enter the main valve port and the engine admission port. At about half-stroke the supply of mixed gases is cut off, so that the cylinder is completely closed off from the atmosphere and from the gas supply ; an electric spark now passed into the explosive mixture from a battery and induction coils causes explosion and the pressure rapidly rises. The piston is

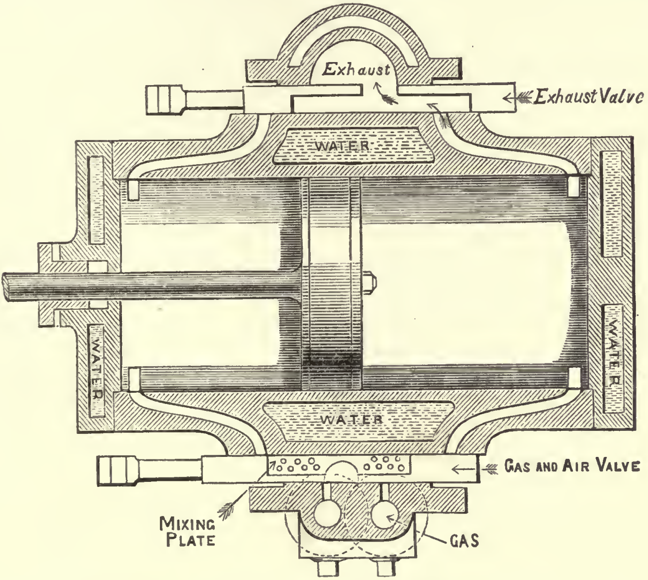

FIG. 22.—Lenoir Engine Cylinder (sectional plan).

thereby pushed on its stroke during the portion remaining to be completed; at the end of the stroke the pressure has fallen by expansion doing work and by the cooling action of the cylinder walls, to nearly atmosphere again; the exhaust valve opens and during the return stroke the products of combustion are expelled preparatory to taking in a fresh charge upon the next working stroke. The same operation is repeated upon the other side of the piston so that the engine is double-acting of a kind. It cannot be considered as truly double-acting, like the steam engine, as the driving pressure is not acting during the whole forward stroke, but only during that portion of it which is not taken up in sucking in the explosive charge. The fly wheel, because of this, is much larger than in a steam engine of corresponding dimensions, and the power is also much less. The valves are both actuated by eccentrics upon the crank shaft. Each slide requires a separate eccentric because the exhaust during the whole stroke and the admission during only half-stroke could not be managed by the single to and fro movement. To get the best result it is evident that the least possible power should be expended in introducing the charge; therefore, large inlet air ports are required, all the larger because an eccentric cannot be made, alone, to give a sudden cut-off. To prevent throttling as the ports approach the closing points, the total opening must be considerable. The eccentric is so set that the port is open slightly before the crank has crossed the centre, so that it may be well open when the charge begins to enter. In fact it has some lead like a steam slide, and for the same purpose. The exhaust valve is set precisely as in the steam engine, and is of similar construction, except that it is not enclosed in a case, but it is held against the cylinder face by a cover and screws. Fig. 22 is a sectional plan of the cylinder, showing the valves and ports; fig. 23 is a transverse vertical section of the cylinder, showing the valves and valve covers with gas, air and exhaust ports. The arrows indicate the direction of the gas and air flow, while mixing and entering the cylinder, also the exhaust path. As the air port opens to the cylinder slightly before the piston has completed its stroke, and a slight pressure may yet remain in the cylinder, the gas port does not open till a little later. The gas and air do not open quite simultaneously, although nearly so ; neither do they close quite together. There is one gas admission port in the slide leading into the main port ; in the cover there are two ports between which the slide port passes, taking gas from either, as is required, for the end of the cylinder which is receiving the charge. The main valve port opens on the upper side to the air, and is covered by a perforated plate and a light metal case furnished with a throttle valve ; the brass plate perforated is carried downwards and covers the gas port, so that the gas entering from the supply pipe is not permitted to flow at once into the main port, but must first pass up through the perforations and mix with the air which is going down through those adjoining. The mixing arrangement is somewhat imperfect, and is exceedingly sensitive to change of speed in the engine. The throttle-valve is intended to increase or diminish the supply of air ; by closing it slightly, the suction upon the gas port is increased, and so the proportion of the mixture altered. By opening it, the air has freer access to the cylinder, the pressure is not reduced so much, and therefore the gas is diminished. The mixing, however, is too irregular ; as the gas streams are not projected separately into the

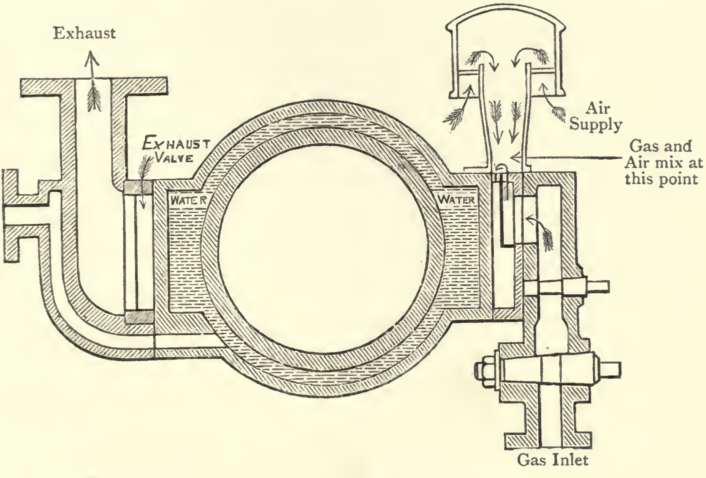

FIG. 23.—Lenoir Engine Cylinder (transverse section).

incoming air stream, the gas flows too much in mass into the air in mass. The igniting points were invariably placed at the upper part of the cylinder in the cylinder covers. The cylinder and covers are waterjacketed, the water is kept continuously flowing through, so that the temperature may not become so high as to injure the cylinder. This is a most necessary precaution in any gas engine of even moderate power; the effect of neglect in a Lenoir engine is very soon observed in complete cutting up of the cylinder; it speedily becomes red-hot if allowed to run without water. Indeed, even with an adequate water supply, the larger engines gave great trouble; although the cylinder could be kept cool the piston could not. It was proportioned too much on steam engine lines, and when working at full power the incessant explosions upon both sides caused so rapid a flow of heat into it that the small surface exposed to the water jacket by the circumference was insufficient to carry away the heat absorbed by the whole piston area. The pistons often became red-hot.

The exhaust slide also had rather hard work, and required delicate adjustment, as the exhaust gases were very hot, often 800° C.; the expansion of the slide was therefore considerable, and in order to be pressure tight when hot, the adjusting screws had to be kept rather easy when cold. The engine when starting, therefore, always leaked a little at the exhaust valve. The same thing happened with the admission slide, but to a lesser degree.

Notwithstanding the large area of the admission port and the lead given to the admission valve, the closing motion was too slow to prevent throttling; accordingly the pressure fell somewhat below atmosphere, while the valve was cutting off preparatory to explosion. After cutting off a slight delay occurred between the passing of the spark and the commencement of the explosion; the explosion itself took some time to complete; it was by no means instantaneous; the diagram produced was consequently imperfect. In addition to all this, the piston being so hot, heated the charge while it was entering, and so occasioned further loss.

The lubricating arrangements also were primitive. The steam engine requiring but little care in lubricating, the gas engine was not supposed to require more; and the ordinary lubricating cock was deemed sufficient. All these sources of loss, inevitable in a first attempt, made the engine comparatively inefficient. Notwithstanding all its defects, the Lenoir engine at the time of its production was the best the world had yet seen, and in careful hands it did good work and created a widespread interest. The engine in South Kensington Museum, under the skilful care of Mr. S. Ford, worked for many years supplying all the power required for the repair department of the Patent Office Museum. It runs with perfect smoothness, nothing whatever in its action would enable one standing beside it to imagine for a moment that the motive power was explosive. The popular notion of an explosion is always associated with the idea of a great noise. This, of course, physicists have always known to be a fallacy, as no explosion makes noise unless it has access to the atmosphere. An explosion in a closed vessel makes no sound unless the vessel bursts. In a gas engine it is only necessary to see that the explosion is not too rapid, but that time is allowed for the slack of the connecting rod and crank connections to take up. The explosions used by Lenoir were seldom more rapid in rise of pressure than is common with all steam engines. A 1-horse Lenoir engine inspected lately by the author at Petworth House, Petworth, had been at work for the past twenty years pumping water for the town and is still at work. It works with smoothness and is altogether more silent in its action than most modern gas engines. The author finds that many Lenoir engines are still at work after twenty years' continuous use, notably two 1-horse power engines at the Brewery of Messrs. Trueman, Hanbury and Buxton, London, and one 1-horse power at the establishment of Messrs. Day, Son and Hewitt, Dorset Street, London, all doing hard work with great regularity.

Diagrams and Gas consumption.—Prof. Tresca of Paris has made experiments with a ½-horse Lenoir engine, and found that it consumed 95 cb. ft. of Paris gas per indicated horse power per hour. The diagrams from so small an engine hardly do justice to the method, and as it is desirable to compare the engine with modern engines using similar volumes of charge the author has taken a diagram from a paper by Mr. Slade, published in the Journal of the Franklin Institute, Philadelphia. The engine had a cylinder of eight inches diameter and sixteen stroke. The explosion space corresponds closely to that of the author's experimental explosion vessel.

The diagram, fig. 24, at once shows the truth of the preceding discussion of the action of the engine.

AB is the atmospheric line, traced upon the indicator card by the pencil before opening the indicator cock to communicate with the interior of the cylinder; it is the neutral position of the indicator piston while the pressure on both sides of it is at atmosphere; any pressure from within the cylinder pushes up the piston and therefore the indicator pencil. Pressure above atmosphere is registered by lines above that line, pressure below atmosphere is registered by lines below that line. The card shows three distinct tracings, each corresponding to one stroke of the engine: admission of the charge, explosion, expansion and return expelling the products of the combustion. If the cycle is carried out in a mechanically perfect manner the admission of the charge should be accomplished without loss by throttling. This is not so. From the point *a* to the point *b* the valve is open enough to give free access to the cylinder, and accordingly the pressure within the cylinder is not appreciably lower than that without; but here the valve begins to contract its opening at the very moment that the piston is moving most rapidly, the pressure falls and is a couple of pounds per square inch below atmosphere when it closes. When closed, the spark does not at once take effect, so that the pressure has become 11 lbs. per sq. in. total before the igni-

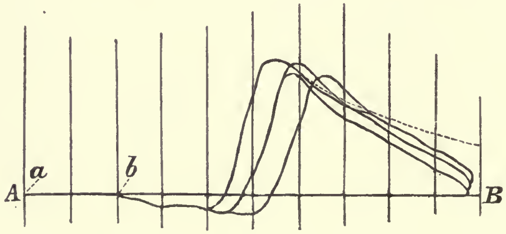

Diagram at 50 revolutions, cylinder 8⅓ inches diameter, 16¼ inches stroke.

FIG. 24.—Lenoir Engine Diagram.

tion begins to cause a rise. Then the ignition itself takes some time to be completed, here about $\frac{1}{25}$ second ; the piston has, therefore, moved through a further one-and-a-half-tenth of its stroke and the heat given by the explosion is not added at strictly constant volume, as required by theory. Apart altogether from loss of heat to the cylinder walls, this diagram is mechanically imperfect. The valve arrangements should be such that no loss is incurred in charging and that the explosion follows so rapidly that the pressure in the cylinder has no time to fall by expansion, after closing the admission ; the explosion, indeed, should at once follow the cut-off. In the best of the three lines the pressure has fallen to nearly 11 lbs. total, and the maximum pressure of the explosion is 48 lbs. per square inch total. The average of the three lines gives a pressure divided over the whole stroke of only 8·3 lbs. per square inch, which, assuming the diagram from the other end of the cylinder to give similar results, gives a total of 2 indicated horse power at 50 revolutions per minute. This is an exceedingly poor result for so large an engine. The apparent indicated efficiency is much below that of a theoretical diagram using the same expansion. Fig. 25 shows in dotted lines a diagram which will have the same efficiency as the actual diagram (best of the three lines). If the temperature of the entering charge has been raised to 100° C., as stated by Mr. Slade, then the point *c* upon the diagram corresponds to that temperature; the point *d* will correspond to a temperature of 2035° C. absolute, as the volume has increased from 0·4 to 0·5 and the

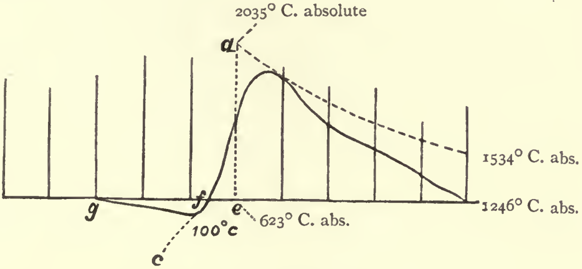

FIG. 25.—Lenoir Engine Diagram.

pressure from 11 lbs. to 14·7 lbs. per square inch total at the point *e*. The area of the part of the explosion curve *def* may be taken as equal to the part of the diagram *cfg* which is resistance due to the valve action; the work done upon the piston by the one part balances the loss by the other; both portions may therefore be neglected, the dotted lines representing the apparent diagram efficiency.

The temperatures for calculating maximum possible efficiency are as follows—they are also marked upon the diagram

T	2035°	absolute.
T^1	1534°	"
t	623°	"
t^1	1246°	"

Calculating E from formula (17) p. 57

$$E = 1 - \frac{(T^1 - t^1) + 1{\cdot}408\,(t^1 - t)}{T - t}$$

$$= 1 - \frac{(1534 - 1246) + 1{\cdot}408\,(1246 - 623)}{2035 - 623}$$

$$= 0{\cdot}175.$$

The apparent indicated efficiency for the best of the three lines is 0·175. If it were constantly repeated, the actual indicated efficiency may be obtained by multiplying by the efficiency of the gas in the mixture used to get the explosion. The numbers got from explosion in a closed vessel do not quite represent the conditions of loss in a cylinder with a moving piston. In the first case the loss of pressure and temperature is due solely to the cooling effect of the vessel's walls; in the second the moving piston reduces pressure and temperature by expansion, and at the same time increases the surface exposed. The increased surface, however, will not increase the rate of cooling, as the volume is at the same time increased in a greater proportion. It has been already shown that cooling of a heated mass of gas is independent of the pressure, and depends on the ratio of surface to volume.

In the engine the volume of the hot gases becomes doubled by expansion, but the surface exposed does not double; the cylinder surface increases with the volume, but the piston area and cylinder-cover area remain the same, so that the proportion of surface to volume diminishes instead of increasing. The heat lost to the cylinder and piston and cover in the engine will therefore be no greater than that lost to the enclosing wall of the experimental explosion vessel in a similar time. It will indeed be somewhat less, as in the time taken doing work the temperature will fall by heat disappearing as work. With the closed vessel the fall is due solely to cooling, so that the average temperature during the time of exposure is higher. More work is urgently required by careful physicists to get accurate data. At present the approximation to the efficiency of the gas in different mixtures by closed vessel experiments is the best that can be had; it cannot be greatly in error. The efficiencies obtained from the indicator diagram and the author's experiments will be lower than the truth, the more so the greater the expansion. With engines as at present constructed the difference is but small.

The mixture required to give a temperature of 2035° C. absolute is, for Oldham gas, 1 gas 6 air, and the average pressure during 0·3 sec. from complete explosion is 63 lbs. per square inch above atmosphere, nearly. The time taken to expand in the engine after explosion is 0·3 sec. ; the pressure which should be produced by the explosion of this mixture, if all the heat of the gas went to heat the air and products, 192 lbs. per square inch above atmosphere. That is, the difference between 192 and 63 has gone in heat suppressed at the moment of complete explosion and heat lost while exposed to the influence of the vessel walls during the same period as the effective stroke of the engine.

The efficiency of the gas in the mixture is therefore

$$\frac{63}{192} = 0·33 \text{ nearly,}$$

that is, only one-third is really effective in raising temperature. The actual indicated efficiency will, therefore, be only one-third of the apparent. Three times the amount of heat accounted for by the diagram is required to make the gases used in the explosion show the temperatures and curve of the diagram.

Apparent indicated efficiency × efficiency of gas = actual indicated efficiency :

$$0{\cdot}175 \times 0{\cdot}33 = 0{\cdot}058$$

The actual indicated efficiency of the engine is 0·058 or 5·8 per cent. if this diagram be constantly repeated; but as it is the best of the three lines it requires correction. Taking the worst of the three diagrams, fig. 24 shows the temperature as follows : T, 2035° absolute ; T^1, 1697° absolute ; t, 797° ; t^1, 1243° absolute.

The apparent indicated efficiency is $E = 0{\cdot}126$.

The actual indicated efficiency is $0{\cdot}126 \times 0{\cdot}33 = 0{\cdot}0495$ or 4·95 per cent. of the total heat given to the engine.

Tresca calculates the heat transformed into work by the Lenoir tested by him as 4 per cent.

The mean of the best and worst of these diagrams is

$$\frac{5{\cdot}8 + 4{\cdot}95}{2} = 5{\cdot}37,$$

which is higher than the result obtained by this distinguished physicist ; but the difference is sufficiently accounted for by the difference in the dimensions of the engines. Tresca's was only half-horse, Slade's was two horse.

The Lenoir engine used mixtures ranging in composition from 1 gas and 6 vols. air to 1 vol. gas and 12 vols. air, depending upon the amount of work upon the engine ; when there was little work the governor was arranged to throttle the gas and so diminish the proportion present. This was a bad plan, as will be explained in the chapter upon governing. But the effect was to make the engine use all grades of ignitable mixtures from the strongest to the weakest. Apart, however, from all intentional arrangements for governing, these engines tended to govern themselves. An increase of speed always causes the proportion of gas in the mixture to diminish, because the resistance of the small gas port to flow increases more rapidly than the larger air port. It follows that if the ports are proportioned to pass certain volumes at a low rate of speed, at a higher rate the proportion is disturbed, the smaller port giving a greater proportional resistance. The effect is seen in all the diagrams, the ignitions become later and later as the mixture diminishes in inflammability, and after attaining a certain dilution, ignition ceases altogether, or becomes too slow to be of any practical use. In the Lenoir type of engine too slow ignition is an unmixed evil, as the theory of the engine requires rapid ignition. In it the loss of efficiency due to valve and igniting arrangements is considerable. The electric ignition is very delicate and troublesome. To overcome the defects of the Lenoir, Hugon introduced his engine, which in some respects was a considerable advance.

HUGON ENGINE.

The Hugon engine, like the Lenoir, exploded the charge drawn into the cylinder by the piston at atmospheric pressure: in it, however, greater expansion and more dilute mixtures were used.

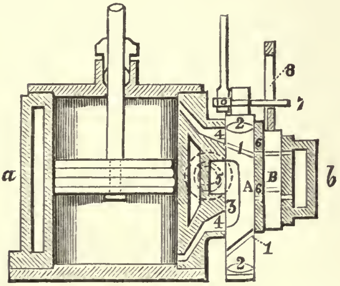

FIG. 26.

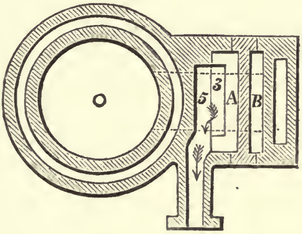

FIG. 27.

Hugon Engine Cylinder.

Fig. 26 is a sectional plan showing valves, passages and the cylinder and piston. Fig. 27 is a transverse vertical section through the cylinder at the line *a b*. The admission of the charge and the expelling of the exhaust are accomplished through the same passage, so that the cylinder has only two ports, as in the steam engine: two valves are used, one working outside the other. The inner valve has five ports, two for admitting the charge, one for exhausting, and two for carrying the igniting flame. The ignition by flame was first accomplished in a workable manner by Hugon, although it had been described in several patents long before his time.

The ports marked 1 1 in the inner slide A are admission, the ports marked 2 2 in the inner slide are igniting, ports; the port 3 is the exhaust passage, alternately communicating with each end of the cylinder by the long ports 4 4 to the exhaust port 5, precisely as in a steam engine. The action of the admission ports is somewhat novel. The object is to secure a rapid opening and cut-off, bringing the igniting flame on immediately after closing the cylinder. The valve is actuated from a cam. When the piston is at the end of its stroke and is moving forward, the valve A is moving in the same direction, the port 3 is allowing the exhaust gases to escape from the other side of the piston, the port 1 is open to the cylinder and is communicating through the port 6 or 6, in the outer slide B, with the air and also with the gas supply. When the piston has taken in sufficient charge, the cam moves the slide A suddenly forward, so causing the port 1 to close on the outer side but not on the inner; the igniting port comes on and the flame burning in it inflames the mixture, filling the engine port, from whence it spreads into the cylinder itself. As the inner valve cuts off when moving in the same direction as it does when opening, it is evident that it must cross back again, to be in the position required to commence opening at the correct time. While crossing, unless the communication with the atmosphere and gas supply is stopped in some other way, it will open at the wrong time; to prevent this, the outer valve B is provided. It is actuated from a pin projecting from the main valve A; this pin 7 works in the slot 8, and while the main valve is moving forward after cutting off, the pin strikes the end of the slot and carries the outer valve with it, causing it to close the port in the cover which it commands. A small plate and spring give friction enough to keep the valve in position till it is moved in the other direction. When the main valve returns, although its ports open on the engine ports, the outer ends are blinded by the outside valve which is not again opened till the main valve has closed. By this ingenious contrivance, a rapid admission and cut-off are secured with one cam and the main and auxiliary slides. The engine from which these details are taken is in South Kensington Museum and is rated at ½-horse power. The valves are arranged to cut off at about one-third stroke.

The cylinder is $8\frac{3}{16}$ diameter and 10 in. stroke. The clearance spaces due to the long ports 4 4, the valve ports open to the cylinder at the moment of explosion, and the space into which the piston does not enter, make up in all a proportion of products of combustion equivalent to nearly thirty per cent. of the entire charge. The effect of this is to cause a considerable difference between the nature of the mixture in the port and that in the cylinder itself, the port mixture being much more inflammable than that in the cylinder. As a consequence the ignition is more rapid with weak mixtures than in the Lenoir. The gas is supplied to the air port in regulated amount by means of a bellows pump worked from an eccentric on the crank shaft; it mixes with the air in passing through the valves and port; the products of combustion are therefore completely expelled from the port, and nothing but pure mixture left to be inflamed by the igniting arrangement. The gas for the internal igniting flame is supplied also from a bellows pump under slight pressure. This flame is extinguished by each explosion, and is relighted when the port opens again to the air by a constant external flame. The action of the exhaust port in the main slide is so evident as to require no other explanation than that afforded by the drawing.

The engine works very smoothly, and is a great improvement upon Lenoir in certainty of action; all the trouble with the battery and coil is very simply avoided. To prevent overheating of the piston, water is injected by means of a tap; it is adjusted so that each suck of the engine drawing in mixture also takes in enough water to keep the piston at a reasonable temperature. In this the engine was successful; it was capable of harder and more continuous work than the Lenoir, and was in every way more certain in its action even with a considerable variation in the composition of the explosive mixture used. The only parts which gave trouble were the bellows pumps controlling the gas supply to cylinder and igniting port; these were made of rubber, and deteriorating after some use gave trouble by leaking and occasional bursting. In some of the engines in use they were replaced by metal pumps and a mixing valve. With these additions the engine in the Patent Office Museum ran for many years.

Diagrams and Gas Consumption.—According to Professor

Tresca, the gas consumed by a Hugon engine of 2-horse power was 85 cubic feet per indicated horse per hour.

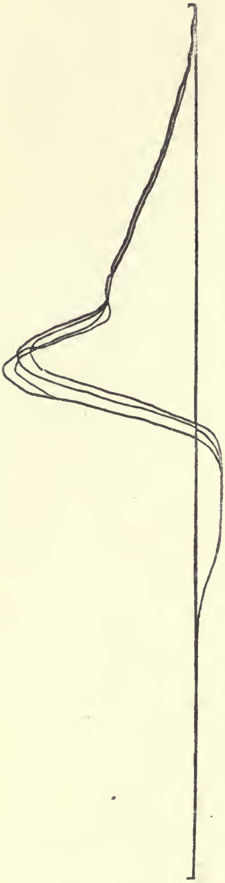

Scale 1 in. = 24 lbs. : 8$\frac{3}{16}$″ diam. of cylinder : 10 ins. stroke : 0·78 i.h.p.

FIG. 28.—Diagram from $\frac{1}{2}$-h.p. Hugon Engine; 75 revs. per min. (*Clerk.*)

Fig. 28 is a diagram taken from a $\frac{1}{2}$-horse engine by the author. The engine was indicating 0·78 horse power, the average pressure being 3·9 lbs., and the maximum 25 lbs. per sq. in. The card shows considerable delay in explosion after cut-off, notwithstanding the rapid movement of the igniting slide.

BISCHOFF ENGINE.

The consumption of the non-compression type of engine is too high to permit of its use in any but the very smallest machines; accordingly the Lenoir and Hugon engines have long disappeared from the market, and the type survives mainly in the Bischoff, which is specially designed for small powers, mostly under half-horse. It is an exceedingly ingenious little engine, and presents many interesting peculiarities.

Fig. 29 is a side elevation, part in section; fig. 30 a section arranged to explain the valve action. In both figures the similar parts are marked with similar letters. There is no attempt to gain economy by attention to theory; the aim is to get a small workable engine with the least possible complication. In this it is very successful. To avoid the complication of a water-jacket, the cylinder and piston are so arranged that heating is allowable. The engine is upright and very peculiar in appearance, the cylinder has cast on it a number of radiating ribs, which by contact with the air cause conduction of the heat more rapidly than would otherwise occur. The temperature, however, becomes very high, and provision is made to prevent injury to the piston. It is fitted loosely to the cylinder and has no rings, the connecting rod arrangement is seen in the figure (29); it takes the thrust of the explosion in tension, and almost without side pressure upon the guide. Any side pressure upon the guide is quite prevented from reaching the piston, and it consequently is never rubbed against

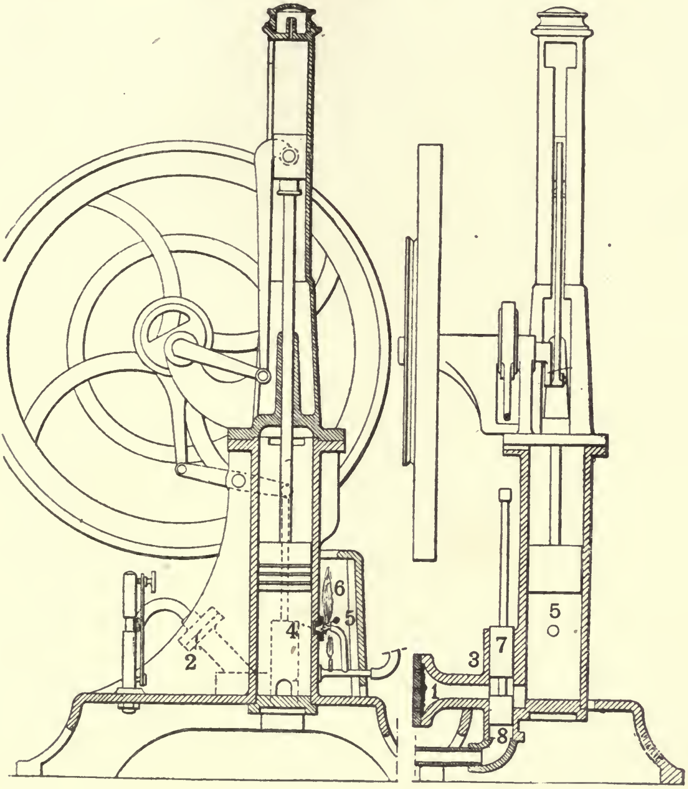

FIG. 29. FIG. 30.

Bischoff Engine.

the cylinder. The pressure of the explosion is so slight that the leakage is not serious even without rings. The piston moves up, taking in the charge, the air through the valve 1, fig. 30, which is simply a piece of sheet rubber backed by a thin iron disc. The pressure of the air opens, and the explosion closes it; the valve 2, fig. 29, similarly made but smaller, admits the gas; the mixture does not form till the gases have passed the point 3, fig. 30; therefore the explosion does not spread back to the valves. When the piston gets to the point 4, it crosses a small aperture 5 covered by a light hanging valve; a flame burning outside in the flame chamber is drawn in. The explosion then occurs, and the pressure at once closes all valves and propels the piston. On the return stroke, the piston valve 7 opens to the exhaust pipe 8, at the same time closing the passage to the air admission valves. The cylinder proper requires no lubrication; the guide requires a little, but the projection of the cover and a draining hole prevent accumulation and overflow of oil into the cylinder. This precaution is very necessary, because of the high temperature of both piston and cylinder; without it speedy charring and choking up of the cylinder would result. The arrangements are crude and the engine is somewhat noisy, but it is very reliable, and suits the purpose for which it is designed exceedingly well.

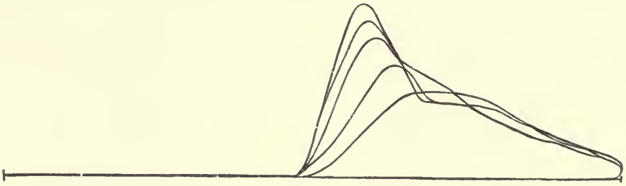

Scale 1 in. = 24 lbs.; 3⅜″ diam. of cylinder; 11½ ins. stroke.

Fig. 31.

Diagram from 1-man power Bischoff Engine; 112 revs. per min. (*Clerk.*)

Diagrams and Gas Consumption.—The diagram is very similar to the Lenoir. Fig. 31 is a diagram taken from a 1-man power engine by the author.

The consumption is, as might be expected, rather higher than Lenoir. According to tests made at the Stockport Exhibition it uses 120 cubic feet per actual horse power per hour.

TYPE (IA).

Free Piston Engines.—The very high consumption of gas common to the engines described prevented their extended use, and set inventors to work to produce some method which would give better results. It was very obvious that there was a large loss of heat; the trouble with cylinders and pistons made this abundantly evident. Devices proposed for increasing power by the injection of water spray, and steam, in various ways failed to produce good effect except in aiding lubrication. The inventors of the day seem to have reasoned somewhat in this fashion. The force generated by an explosion of gas and air is an exceedingly evanescent one, a high pressure is produced, but it lasts only for a very short time; if work is to be obtained before loss by cooling absorbs all the heat, it must be done rapidly. The reason why the Lenoir and Hugon engines give so poor a result is a too slow movement of piston after the explosion. Therefore, if a method can be devised permitting greater piston velocity, better economy will be obtained. In this reasoning there was considerable truth. It has been already proved that the shorter the time of contact between the charge after explosion and the enclosing walls, the greater will be the efficiency of the gas in the mixture. But this only holds within certain limits. If the expansion is too rapid before explosion is complete, then a loss instead of a gain will occur; the expansion should not commence till maximum pressure is attained or it will cause a loss of pressure. Indeed, it is quite conceivable that in engines of the Lenoir type, the expansion might be so rapid, relatively to the rate of explosion, that no increase of pressure at all resulted; in which case no power whatever would be obtained. The gain then to be expected arises from rapid expansion after complete explosion. This has been carried out by several inventors by the free piston method. Instead of expending the force of the explosion upon a piston rigidly connected to a crank, the piston is allowed free movement. The explosion launches it against the atmosphere; it acquires considerable velocity, which is expended in compressing the exterior atmosphere, that is, in producing a vacuum in the cylinder. When all the energy of motion is expended, the piston comes to rest, and the atmospheric pressure forces it back again. So soon as the return movement commences, a clutch contrivance engages the shaft and drives it. Engines of type 1A may be described as—

Engines using a gaseous explosive mixture at atmospheric pressure before explosion ; the explosion acting on a piston free to move without connection with the crank shaft, the velocity being absorbed by the formation of a vacuum. The power is given to the shaft on the return stroke under the pressure of the atmosphere.

As has been stated in the historical sketch, the first to propose this kind of engine were Barsanti and Matteucci, 1857, but the difficulties were not sufficiently overcome until the invention of Otto and Langen, 1866.

Otto and Langen Engine.—This engine consists of a tall vertical cylinder surrounded by a water jacket ; in it works a piston which carries a rack instead of a piston rod; the mouth of the cylinder is open to the atmosphere. Across the top of the cylinder is carried the fly-wheel shaft ; it cannot be called the crank shaft because there is no crank. On the shaft there is a toothed wheel which engages the teeth of the rack ; it runs freely on the shaft while the piston is on its upward stroke, but by an ingenious clutch arrangement it grips the shaft when the piston moves down. The shaft is therefore free to rotate in one direction and the piston is free to move up without restraint, but in moving down it gives the impulse. The shaft is carried on bearings bolted to the top of the cylinder, which forms a strong and convenient column for carrying the mechanism required to accomplish the cycle of the engine. At the lower end of the column is placed a slide valve which performs the treble duty of admitting, igniting, and discharging. It is driven from an intermediate shaft, intermittently, as determined by the governor of the engine. When working at full load, the movement of a small crank actuated from the shaft, lifts the rack and piston through some inches, taking in the charge through the slide valve, which then moves further and brings in the igniting flame. The explosion ensues and shoots up the piston with considerable velocity, the pressure rapidly falls by expansion and soon gets to atmosphere. The piston however has been moving freely and therefore has done no work ; all the energy of the explosion, however, has been given to it. The piston has the energy of explosion in the form of velocity ; it moves on, the pressure beneath it falling below atmosphere until all its energy of motion is absorbed in forming the vacuum. When this occurs it ceases its upward flight and returns, the outer atmosphere driving it back, and as the clutch has engaged the shaft, an impulse is given. The actual work is therefore done by the atmosphere on the down stroke, the explosion being spent in obtaining energy in a form conveniently applicable. If no cooling of the hot gases occurred upon the down stroke the compression line would return to the point where the expansion line touched atmosphere ; then the exhaust valve would open and the gases would be discharged at atmospheric pressure.

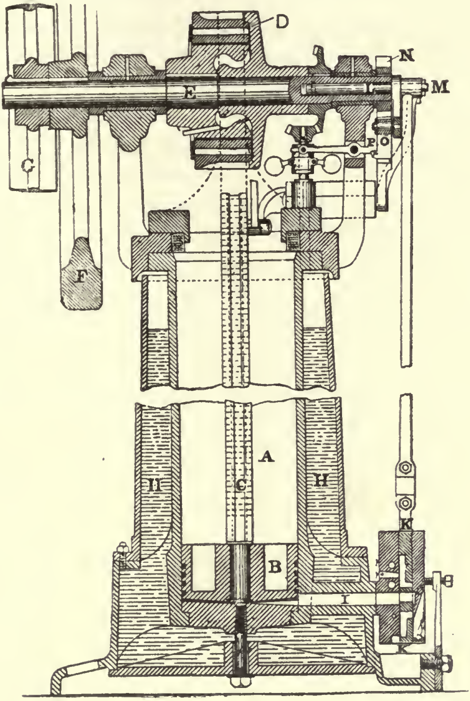

FIG. 32.—Otto and Langen Engine (vertical section).

In that case the work done by the atmosphere and weight of piston on the downward stroke would exactly equal the energy of the explosion while falling by expansion to atmospheric pressure. But the cylinder does cool the gases while on the upward and downward stroke, so that the expansion line does not return upon itself; the amount of fall below the expansion line is gain and is added to the energy of the explosion just as the condenser adds to the efficiency of the expansion of steam. The exhaust gases are expelled by the piston and a new stroke is commenced. At full power the piston makes about 30 strokes per minute, the shaft rotating about 90 revolutions per minute. The governor of the engine is so arranged that when the speed becomes too great, a lever disengages a pawl from a ratchet and disconnects the small crank lifting the piston. The charge is not taken in till the speed falls, and then the pawl is again allowed to connect the small crank to the main shaft. The ignition slide gets its motion from the small crank shaft, so that it is arrested or moved along with the piston. The piston remains at the bottom of the stroke till it is wanted for another explosion.

Fig. 9, p. 21, shows the general arrangement of the engine, and fig 32 is a vertical section showing the clutch and section of the slide valve. Fig. 33 is an elevation, part in section.

A is the cylinder; B is the piston to which is attached the rack C; D the toothed wheel containing the clutch engaging the rack to the power shaft. The rack is strongly guided. E is the fly-wheel shaft on which is keyed the fly wheel F and the driving pulley G; H water jacket; I the port for inlet of the explosive mixture and discharge of the products of combustion; K the slide valve serving to admit, to ignite the charge and to discharge the products of combustion; it is actuated from the small shaft L by the pin M; the ratchet N and the pawl O connect the small shaft to the main shaft when requisite, as determined by the governor lever P.

This engine is the result of great care and labour on the part of the inventors; it is greatly superior in economy and efficiency to any preceding it, and its only fault is its excessive bulk and weight and the great noise made by it when in action. The whole of the energy of the explosion being expended in giving the piston velocity, just as in a cannon, the recoil is considerable. So serious is it that none but the very smallest engines can be placed upon upper floors without special strengthening. The author has seen an engine at work where the vibration produced was so great that props were put under the engine from floor to floor through four floors to get a solid resistance in the basement.

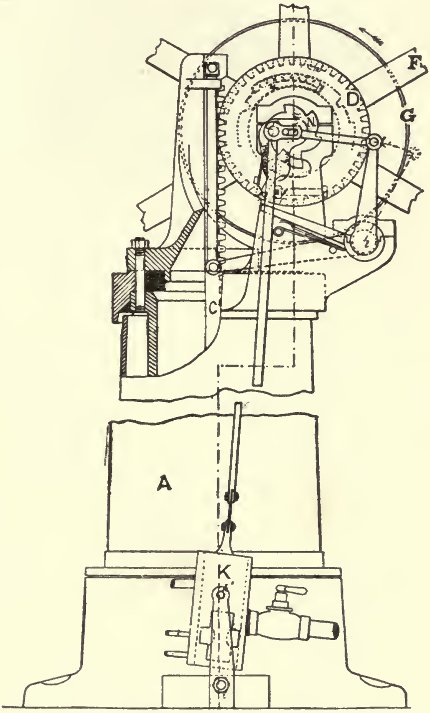

FIG. 33.—Otto and Langen Engine (elevation).

In other cases strong iron beams placed diagonally at the angle of a stone wall carried the engine; notwithstanding these precautions much vibration was caused. These difficulties did not seriously affect the sale of the engine for small powers, but they quite prevented it being made for powers above 3-horse. The clutch also is a matter of great difficulty, the whole power of the engine passes through it and it must act freely and instantaneously. The faintest back lash would allow the accumulation of so much velocity by the return that even a strong arrangement would be destroyed. For this reason the pawl and ratchet of Barsanti and Matteucci failed completely.

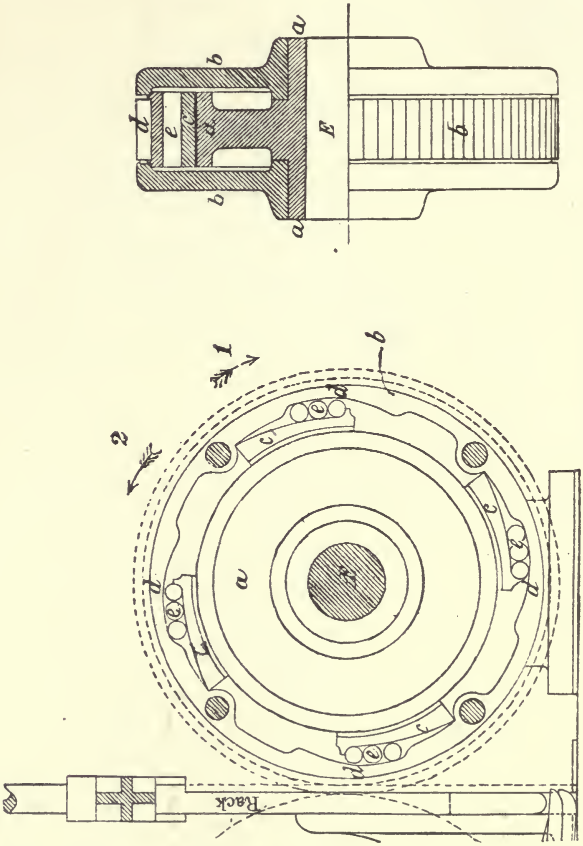

Fig. 34.—Otto and Langen Clutch

Messrs. Otto and Langen's clutch is one of the main points of their invention and is excellent. It is shown in detail at fig. 34. The part *a* is keyed to the shaft; on it runs the part *b* carrying the teeth engaging the rack. So long as *b* moves in the direction of the arrow 1, or is stationary, *a* revolves freely with the shaft in the direction 2. The steel slips *c*, *c*, *c*, *c* are wedge-shaped on the back, so is the interior of the part *b* at the positions *d*, *d*, *d*, *d*. So long as the rack is stationary or ascending, the steel rollers *e*, *e*, *e*, *e*, run freely clear of the inclined surfaces; immediately the rack moves down at a rate greater than the movement at A, then the rollers are firmly wedged between the two inclined surfaces and the steel slips *c*, *c*, *c*, *c* grip the part *a* firmly and drive the shaft. When the bottom of the stroke is reached the wedges loose again and the piston is free.

Diagrams and Gas Consumption.—The author has made a set of experiments upon an engine of 2-horse power working with Oldham coal gas.

The cylinder is 12·5 inches diameter and the longest stroke observed was 40·5 inches. Working at the rate of 28 ignitions per minute, the indicated power was 2·9 horse, and the gas was consumed at the rate of 24·6 cubic feet per i.h.p. per hour. The brake power is 2 horse, so that the brake consumption is at the rate of 36 cubic feet per horse power per hour. This does not include the consumption of the side lights which is in all 12 cubic feet per hour.

Fig. 35 is a diagram from the engine when at full power.

The full line is that traced by the indicator, and the dotted line is the real line of pressures marred by the oscillation of the indicator pencil.

Professor Tresca tested a half-horse engine at the Paris Exhibition of 1867; it gave 0·456 brake horse, and consumed gas at the rate of 44 cubic feet per brake horse power per hour. This estimate did not include the side lights. The author's test gives a better result than that of M. Tresca, but this is due to the fact of the larger engine being used. It is probable that a 3-horse engine would give a consumption of about 30 cubic feet per brake horse power per hour.

The interest excited by the engine at the time of its first trial was naturally great, and many explanations were advanced of the cause of its superiority over the Lenoir and Hugon engines. Strangely enough the theory of the engine has been at best but imperfectly stated by previous writers; some indeed have fallen into grave error respecting its action. It is therefore essential that it should be somewhat fully considered here.

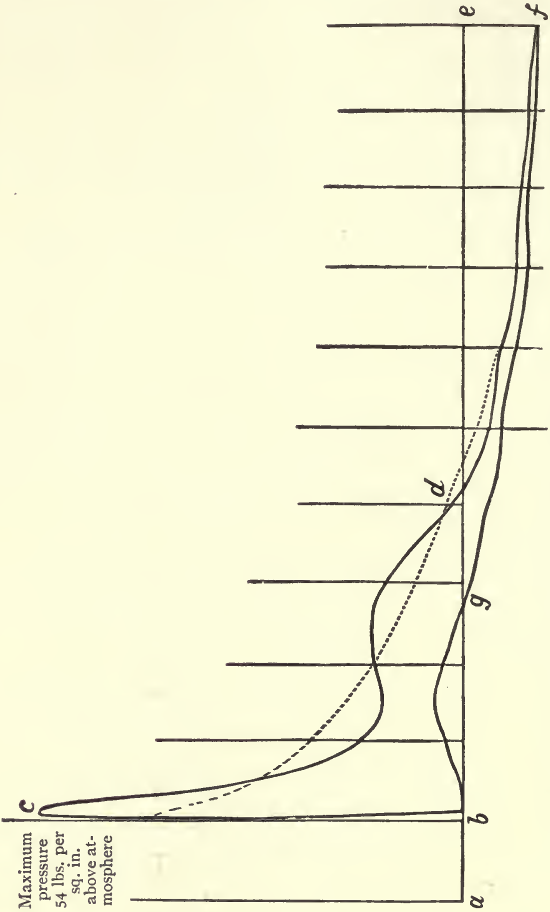

Scale 1 in. = 24 lbs.; 12·5 in. diam. of cylinder; observed stroke 40·5 in.; 28 explosions per min.; 90 mins.; 2·9 i.h.p.

FIG. 35.—Diagram from 2-h.p. Otto and Langen Engine (*Clerk*).

The name by which it is most widely known is in itself misleading. Atmospheric gas engine at once suggests the Newcomen steam engine and further suggests the substitution of flame for steam, vacuum in both cases being supposed to be produced by condensation. In the steam engine the name truly describes the action : the piston is drawn up, the cylinder filled with steam at atmospheric pressure and the steam condensed by a water jet ; then the atmosphere presses the piston down and gives the power.

In the gas engine cooling has little to do with the production of the vacuum ; the vacuum would be produced and the engine would act efficiently without any cooling action of the cylinder whatever. The diagram fig. 35 proves this very clearly. While the piston is moving from the point *a* to *b* by the energy stored up in the fly wheel, the charge enters the cylinder; at *b* the piston pauses, and, the igniting flame being introduced, the charge explodes, the pressure rises to 54 lbs. per square inch above atmosphere. The appearance of the explosion curve does not indicate truly the rate of increase, because the piston is completely at rest till the pressure puts it in motion. The piston moves up impelled by the pressure of the explosion; as it moves the gases beneath it expand and therefore the pressure falls. At the point *d* the pressure is again level with that of the outside atmosphere; here the explosion ceases to impel the piston and, the pressure in the cylinder falling, the atmosphere presents a continually increasing resistance. But while the piston is passing from the point *b* to *d*, the pressure has been falling from 54 lbs. above atmosphere to atmosphere; the average pressure upon it through this distance is 12·6 lbs. per square inch; as the distance is 1·3 feet and the piston area is 122·7 inches, 2010 ft. pounds have been expended upon it. What becomes of this work ? In an ordinary engine it would be communicated to the crank, and if no load were on, the crank would give it to the fly wheel. Here there is no crank and the piston is perfectly free, the piston alone contains the energy ; its weight has been raised through 1·3 feet and the balance of the energy is stored in it as velocity of upward movement.

It must therefore continue to move up till its energy of motion is expended in compressing the atmosphere, in raising the piston, and in friction. If friction did not exist and the piston was indefinitely light, then the portion of the diagram *bcd* would be equal in area to the portion *def*, that is, the work expended by the explosion in giving the piston velocity would be equal to the work expended by the atmosphere in bringing it to rest again. Once at rest the vacuum produced allows the piston to be driven down again, this time to give up its energy to the motor shaft.

As the piston in this engine weighs 116 lbs. the work spent in raising it through 1·3 ft. is $116 \times 1·3 = 150·8$ ft. pounds; deduct this from the total work; and $2010 - 151 = 1859$ ft. lbs. is the energy of motion of the piston.

The relation between energy, mass and velocity is

$$E = \frac{Mv^2}{2}.$$

E = energy in absolute units. One foot pound = 32 absolute units.

M = mass in pounds.

v = velocity in feet per second.

The velocity is therefore $v = \sqrt{\frac{2E}{M}}$

and

$E = 1859 \times 32 = 59488$ absolute units.

$M = 116 \qquad v = \sqrt{\frac{2 \times 59488}{116}} = 32$ nearly.

The velocity of the piston at the moment when the explosion pressure has been expended and the internal and external pressures exactly balance is 32 ft. per second or 1560 ft. per minute; at no point of the stroke in any ordinary engine, steam or gas, is such a high piston speed possible. This explains the recoil of the engine. But this is not the average. The piston has attained 32 feet per second after moving through 1·3 feet; the time taken to move that distance is $t = \sqrt{\frac{2s}{v}}$ when t = time in seconds.

s = space passed through.

v = velocity.

and $s = 1·3$ feet $v = 32$ feet.

$$t = \sqrt{\frac{2 \times 1·3}{32}} = 0·28 \text{ second.}$$

The piston has taken 0·28 second to move through the 1·3 feet; its average velocity during the action of the explosion is therefore 4·64 feet per second or 278 feet per minute. This, although high, is not greatly in excess of that used in the Lenoir and Hugon engines. It is less, indeed, than the average piston speed now used in modern compression engines, 300 to 400 feet per minute being common. If no cooling by the cylinder occurred, the line *c d f* would be adiabatic, and the return line *f g* would coincide with the expansion line *d f*: the portion of the vacuum diagram *d e f* is due solely to the energy of the explosion, the part *d f g* is due to the cooling of the gases. If cooling did not act at all, the area *b c d* would be greater, and therefore *d e f*, which is its equivalent, would also be greater, that is, the vacuum produced would be greater if no cooling whatever existed.

The theory of its action generally held at the time of M. Tresca's experiments seems to have been as follows :

The work of the explosion consists simply in pushing up the piston and filling the space behind it with flame, which flame is cooled by contact with the cylinder, and a vacuum results. The flame is considered as analogous to steam, and the cooling as similar to condensation as in the Newcomen engine. The inventors of the engine seem to share this erroneous idea ; certainly M. Tresca did, as in his report upon the engine he says : 'There is, therefore, between the older machines and the new one this difference of principle, that the pressure in the cylinder can never descend below the atmospheric during the upward stroke. The negative force of the atmospheric pressure, useless as it was, becomes utilisable. . . .' He clearly considered that the pressure during the upward stroke was expended only in lifting the piston through a certain height, and as soon as it fell to atmosphere the piston stopped and the cooling caused a vacuum, the work being done by the falling of the piston and the pressure of the exterior air. If the cooling really caused the vacuum, the diagram would be quite different ; instead of the pressure touching atmosphere at the point *d*, it would not touch till the point *e* at the end of the stroke. The pressure would then abruptly fall to *f*, and the piston would return. M. Tresca observed that the pressure did fall below atmosphere before the end of the stroke, but he considered it as a defect. 'In reality the piston rises in virtue of the swiftness acquired to beyond the position at which there would be equilibrium between the interior and exterior pressure. But that one small loss of power is amply compensated for by the atmospheric power of the downward stroke.'

The very principle of the engine really depends upon this fall of pressure which was considered by M. Tresca a defect; it is the only way to store up the power of the explosion so that it may be available on the downward stroke. If the pressure did not fall, the piston would require to be projected 10·5 feet into the air to absorb the energy of the explosion in its mass alone; by the fall of pressure it is absorbed with the smaller movement of 1·8 feet. The only part of the diagram due to cooling is the part *d f g*, not more than one-fifth of the total area representing work done by the engine.

The superior economy, it is evident, cannot be altogether due to greater piston velocity; the piston velocity, although considerable, is not superior enough to that of Lenoir and Hugon to account for all the difference. There must exist other points of dissimilarity. In the Lenoir type of engine the strokes were numerous and the gas consumed per stroke on the whole smaller than in Otto and Langen engines of equal power: the latter used few strokes but large cylinders; proportionally the cooling surface exposed was thus diminished. Then the piston is at rest until the explosion puts it in motion; the pressure gets time to rise to its maximum before the piston moves and expands the space. Maximum pressure is attained at constant volume as required by theory; at the same time the piston and cylinder remain cool because of the infrequency of the strokes. The entering charge is therefore but slightly heated before explosion, and the explosion gives a better pressure for a smaller elevation of temperature.

The most potent cause of improvement, however, is great expansion: the large cylinders allow an expansion of 10 times the volume existing before explosion, and so gain, first by expanding to atmosphere, and second by the cooling which follows the further expansion. A comparison of the actual diagram with the theoretical reveals some interesting peculiarities which seem hitherto to have escaped observation. The maximum pressure on the diagram, which is above the true pressure, fig. 35, is 54 lbs. above atmosphere, corresponding to a temperature of 1355° absolute.

The mixture exploded contains 1 volume gas and 7 volumes air (Oldham gas); if all the heat present had been evolved by the explosion the pressure should have been 168 lbs. above atmosphere. At the maximum pressure only 32 per cent. of the heat has been evolved, leaving 68 per cent. to be evolved during the expansion. The line *c d* is very much above the adiabatic, so much so that the curve *c d* is nearly isothermal, the temperature at *d* only becoming 1305° absolute instead of 733°, which it should be if adiabatic. The heated gases are therefore gaining heat from *c* to *d*, and as the only source is combustion, it follows that the combination is not nearly complete at the maximum pressure. The 68 per cent. of the total heat which has not appeared at the maximum pressure is appearing during the expansion. The combustion seems to be nearly complete at the point *d* as the line *d e* behaves as if cooling; if adiabatic, the temperature at *f* should be 961°—it is 870°. During compression to atmosphere again, the temperature remains constant at 870°; the cooling power of the cylinder is equal only to preventing increase which would otherwise occur.

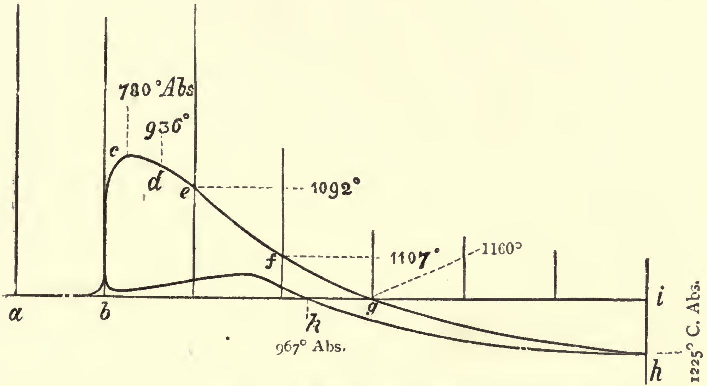

Scale 1 in.=24 lbs. Diluted mixture, gas 1 vol., air 12 vols.

FIG. 36.—Diagram from 2 h. p. Otto and Langen Engine (Clerk).

This effect is more evident with a more dilute mixture. Fig. 36 is a diagram taken by the author from the same engine, but using a mixture containing 1 volume of gas and 12 volumes of air. Here the maximum pressure is only 17 lbs. per square inch above atmosphere. With complete evolution of heat it should be 103 lbs.; the maximum pressure in this case only accounts for 24 per cent. of the heat known to be present, leaving 76 per cent. to be evolved during expansion. The diagram affords the most ample proof that the combustion is proceeding, the falling line shows a steady increase of temperature to the very end of the stroke. The temperatures are marked upon the diagram at the successive points; taking the temperature at the point *b* as 290° absolute, the points *c*, *d*, *e*, *f*, *g*, *h* are respectively 780°, 936°, 1092°, 1107°, 1160°, and 1225°, showing a steady increase throughout the whole expansion line, right

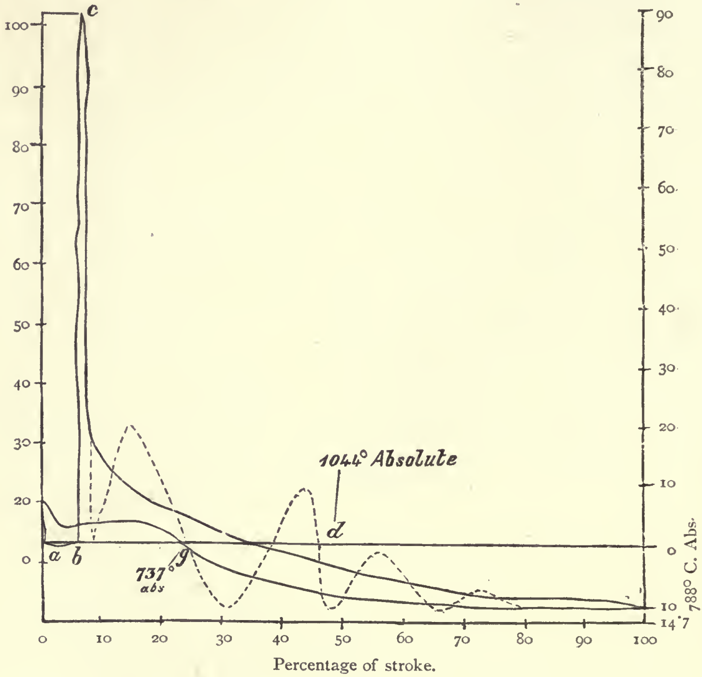

FIG. 37.—Otto and Langen Engine. Free Piston.

to the end of the stroke. The consumption of gas per indicated HP rises very much in consequence, amounting to about 37 cubic feet per IHP hour. The power at the same time falls, so that the 30 explosions per minute are required to keep the engine going without load at 53 revolutions per minute. The cooling during compression is so slow that the temperature falls only from 1225° to 967°, from the point *h* to *k*. All the published diagrams examined by the author show this peculiar effect. Fig. 37 is a diagram published by Mr. F. W. Crossley. Taking 80 lbs. as the maximum pressure, which seems somewhat higher than is warranted by the diagram, the oscillation of the indicator has been so excessive, the corresponding temperature is 1873° absolute : the expansion line *c d* if adiabatic would give at the point *d* a temperature of 1090°, the actual temperature is 1044°. Within the limits of error they may be considered the same ; there is therefore combustion going on from *c* to *d* also. At the point *e* the temperature is 788° ; if adiabatic it should be 667°. It is quite evident that the whole of this expansion curve is above the adiabatic ; in the earlier part of the diagram the oscillation causes uncertainty, but in the latter part the measurement is true enough.

The compression line *e g* is almost isothermal, 788° at *e*, cooling to 737° at *g*.

Fig. 38 is a diagram by Releaux taken from Schöttler.

It is manifestly wrong, as the vacuum part is much too small and the maximum temperature is higher than has ever been obtained by any explosion of gas and air, but if taken as relatively correct the expansion line is much above the adiabatic.

From his study upon the explosion of gas and air mixtures in closed vessels, the reader will be prepared to find that only a portion of the total heat present is evolved by explosion in any gas engine. That is, the explosion maximum pressure never accounts for the whole heat present as inflammable gas ; a portion is in some manner suppressed and is not evolved till long after the moment of complete explosion. Combustion is not completed till considerably after the completion of explosion.

He will be unprepared, however, for such diagrams as figs. 35 and 36, where the maximum pressure represents only 0·32 and 0·24 of the heat present, and 0·68 and 0·76 are evolved during the forward stroke while the pressure is falling. The explanation is simple. The case is quite different from that of the closed vessel or where the piston is connected to a crank. As soon as the pressure of the explosion becomes great enough, the piston at once moves out and prevents further increase of pressure. The slower the rate at which the mixture inflames, the greater will be the apparent suppression of heat; thus the mixture 1 volume gas 7 air takes, in the closed vessel, 0·06 second to complete the explosion, but before this time has elapsed the piston is in rapid motion reducing the pressure before complete explosion. To get the maximum pressure it would be necessary to prevent it from moving till the explosion was complete. The weaker mixture takes 0·25 second to complete the explosion, and so in diagram, fig. 36, the temperature actually rises throughout the whole stroke.

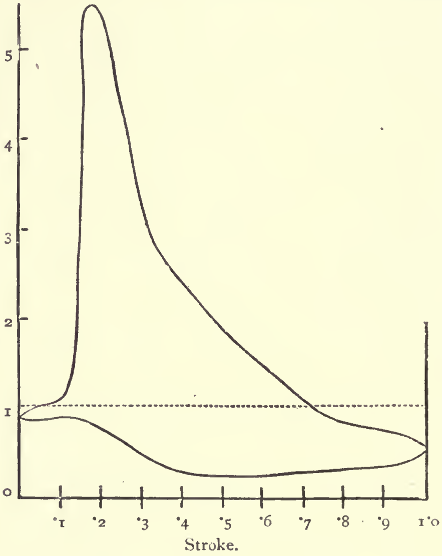

FIG. 38.—Otto and Langen.

A heavier piston would be longer in starting under the pressure of the explosion and would so allow a high pressure to be attained with a given mixture. This explains Mr. Crossley's remark in reading his paper, that heavy pistons gave a more economical result than light ones.

Gilles Engine.—The great success of the Otto and Langen engine occasioned many attempts to improve upon it. Its merits and its faults were equally evident. The recoil of the engine at every stroke was exceedingly troublesome, and the noise of the rack and clutch could be heard at a long distance. Gilles of Cologne invented an engine intended to retain the economy while reducing the noise. In it there are two pistons, one free, the other connected to the crank in the usual way. The free piston being at the bottom of its stroke and close to the crank piston, the latter moves a portion of its stroke, taking in the explosive charge; at a suitable position ignition occurs and the free piston is driven in one direction while the other completes its outstroke. A vacuum is produced between the pistons, and the free piston rod being gripped by a clutch is kept in its extreme position till the main piston returns under the pressure of the atmosphere. The clutch is then released and the free piston falls, expelling the exhaust gases. Fig. 39 is a

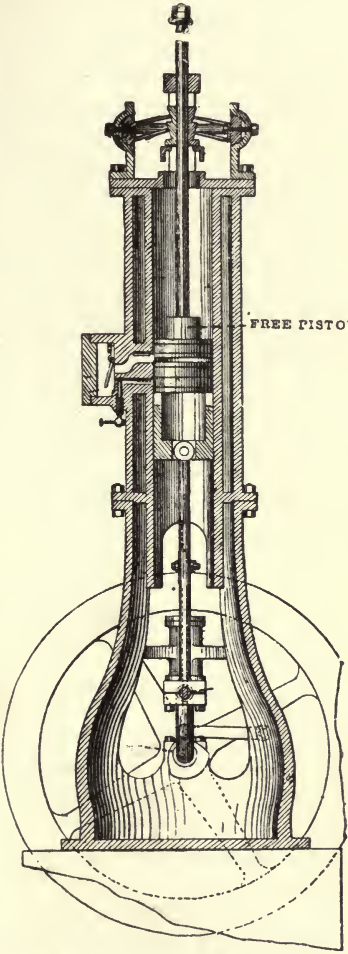

Fig. 39.—Gilles Engine. Free Piston.

section of the engine. It is unnecessary to give further description, as the engine was not so economical or so simple as the earlier one.

TYPE II.

In engines of this kind compression is used previous to ignition, but the ignition is so arranged that the pressure in the motor cylinder does not become greater than that in the compressing pump. The power is generated by increasing volume at a constant pressure. Engines of Type II. are therefore :

Engines using a mixture of inflammable gas and air compressed before ignition and ignited in such a manner that the pressure does not increase, the power being generated by increasing volume.

These engines are truly slow combustion engines ; in them there is no explosion.

The most successful engine of the kind is an American invention; although proposed in 1860 by the late Sir William Siemens, it was never put into practicable workable shape till 1873, when the American, Brayton of Philadelphia, produced his well-known machine.

Messrs. Simon of Nottingham introduced it into this country in 1878. They added one thing only of doubtful utility—that is, the use of steam raised in the water jacket as auxiliary to the flame in the motor cylinder.

Brayton Engine.—In this engine there are two cylinders, compressing pump and motor. The charge of gas and air is drawn into the pump on the out-stroke and compressed on the return into a receiver ; the pressure usual in the receiver varies from 60 to 80 lbs. per square inch above atmosphere. The motor cylinder takes its supply from the receiver but the mixture is ignited as it enters, a grating arrangement preventing the flame from passing back; the mixture, in fact, does not enter the motor cylinder at all; what enters it, is a continuous flame. At a certain point the supply of flame is cut off and the piston, moving on to the end of its stroke, expands the volume of hot gases to nearly atmospheric pressure before discharge.

Fig. 40 is an external view of the engine. Figs. 41 and 42 are sections of the motor and pump cylinders. The action is as follows:—The engine is single acting, receiving one impulse for every revolution; like all gas engines it depends upon the energy stored up in the fly wheel to carry it through those parts of its cycle where the work is negative. The two cylinders are inverted and are attached to a beam rocking beneath them, by connecting rods. The beam is prolonged and connected to the crank above it by a rod; both cylinders are single-acting and the pistons are of the trunk kind. Both pump and motor cylinders are of the same

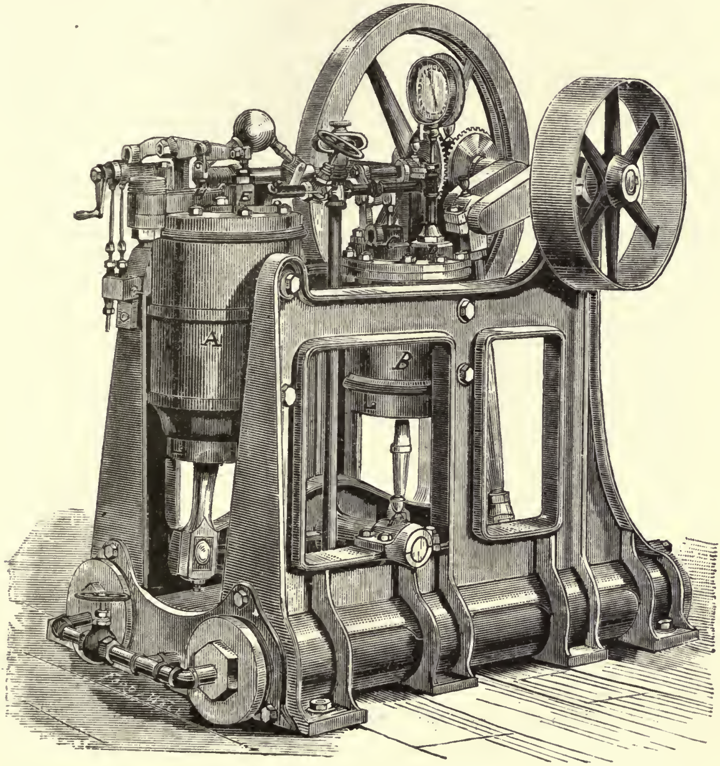

FIG. 40.—Brayton Petroleum Engine.

diameter, but the pump is only half the stroke of the motor. The valves are actuated from a shaft running at the same rate as the main shaft and driven from it by bevel wheels. There are four valves, all of the conical seated kind—two upon the motor, admission and discharge, two upon the pump cylinder, admission and discharge. The admission and discharge valves upon the motor are actuated from the auxiliary shaft by levers and cams, so is the pump inlet. The pump discharge valve is automatic, rising at the proper time by the pressure of compression. During the down-stroke the pump takes in the charge of gas and air, forcing it on the up-stroke into the receiver. From the receiver it is led to the power cylinder, passing by the inlet valve through a pair of perforated brass plates with wire gauze placed between them. Through this diaphragm a small stream of mixture is constantly passing into the motor cylinder; before the engine is started, a plug is withdrawn and the current lighted; a constant flame is therefore burning under the diaphragm. The mixture enters the cylinder through this flame, lighting as it enters; at all times during the exhaust part of the stroke, as well as the admission, the stream of entering mixture, from the receiver, keeps up a small constant flame which is augmented at the beginning of the stroke, so as to fill the cylinder entirely, when the admission valve is opened. When the admission valve is closed, the bye-pass keeps the flame fed with sufficient mixture to keep it alight. The pressure in the cylinder thus never exceeds that in the reservoir and the mixture burns quietly without spreading back.

Figs. 40, 41 and 42.—A is the motor cylinder; B the pump; the beam and connections require no lettering; C is the pump inlet valve (the pump discharge, which is an ordinary lift valve, is not seen in fig. 42, but is lettered D in fig. 40); E the motor inlet; F the igniting plug which is withdrawn when the flame is to be lit before starting the engine (see fig. 82); G is the grating in section (see fig. 41); H the exhaust valve; the levers and cams are sufficiently indicated on the drawing; the small pipe and stop-cock I (fig. 40) communicates at all times with the reservoir and supplies the constant flame with mixture. The engine worked well and smoothly; the action of the flame in the cylinder could not be distinguished from that of steam, it was as much within control and produced diagrams quite similar to steam. The flame grating was the weak point; it stood exceedingly well for a time, but if by any accident the gauze was pierced in cleaning, the flame went back into the reservoir and exploded all the mixture—the engine, of course, pulled up as the constant flame having no supply was extinguished. This accident became so troublesome that Mr. Brayton discontinued the use of gas and converted his engine into a petroleum engine. The light petroleum was pumped upon the grating into a groove, filled with felt, the compressing pump

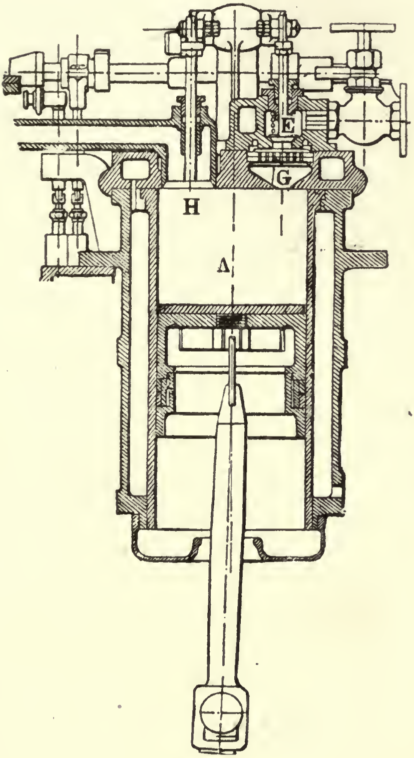

FIG. 41.—Brayton Engine. Section of Motor Cylinder.

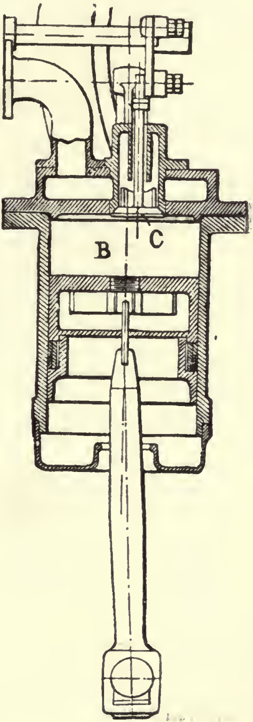

FIG. 42.—Brayton Engine. Section of Pump Cylinder.

then charged the reservoir with air alone. The air in passing through the grating carried with it the petroleum, partly in vapour, part in spray; the constant flame was fed by a small stream of air. The arrangements were, in fact, precisely similar to the gas engine, except in the addition of the small pump and the slight alteration in the valve arrangements. The difficulty of explosion into the reservoir was thus overcome, but a new difficulty arose—the cylinder accumulates soot with great rapidity and the piston requires far too frequent removal for cleaning. The petroleum pump is an exceedingly clever little contrivance; fig. 43 shows its details. The amount of petroleum to be injected at each stroke is so small that an ordinary force pump with clack valves would be uncertain. Brayton gets over this difficulty by substituting a slide valve driven from the eccentric.

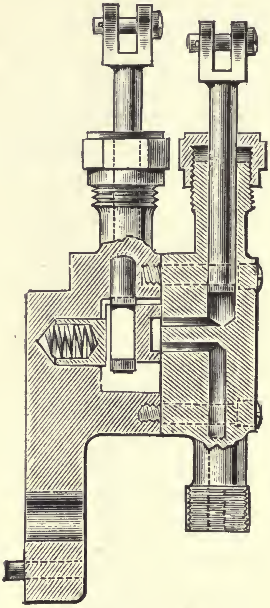

FIG. 43.
Brayton Petroleum Pump.

The plunger of the pump is no larger than a black-lead pencil, yet it discharges any quantity, from a single drop per stroke up to full throw, with unerring certainty. The plunger also is driven from an eccentric. Both eccentrics are in one piece and rotate on the end of the auxiliary shaft, driven by a pawl when the engine is in motion; to allow of starting, the pump can be moved by a hand-crank independently. To start, the air reservoir is filled, if not already full, by turning the engine round by hand; the plug F is then withdrawn and a little petroleum thrown upon the diaphragm by a few turns of the pump. The cock I on the small pipe is then opened and a stream of air flowing from the reservoir vaporises the petroleum; it is lit at G, and the flame having enough air for combustion retreats to the grating and remains burning within the cylinder. The plug is then inserted, the starting cock opened, and the engine starts.

The flame remains alight during the whole time the petroleum continues to be supplied.

The valves act well and the motor cylinder does not suffer from the action of the flame so long as it is kept reasonably clean. If the soot, however, is allowed to accumulate, it speedily cuts up.

Diagrams and Gas or Petroleum Consumption.—Prof. Thurston of the Stevens Institute of Technology tested a Brayton gas engine in New York in the year 1873.

The following extracts are from his report :

'The operation of the engine is precisely similar in the action of the engine proper and in the distribution of pressure in its cylinder, to that of the steam engine. The action of the impelling fluid is not explosive as it is in every other form of gas engine of which I have knowledge.

'Upon the opening of the induction valve, the mixed gases enter, steadily burning as they flow into the cylinder, and the pressure from the commencement of the stroke to the point of cut off, as is shown by the indicator diagrams, is as uniform as that observed in any steam engine cylinder. The maximum pressure exerted during my experimental trial, and while the engine was driving somewhat more than its full rated power, was about 75 lbs. per square inch at the beginning of the stroke, gradually diminishing to 66 lbs. per square inch at the point of cut-off, where the speed of the piston was nearly at a maximum, and then declining in accordance with the law governing the expansion of gases.

'Complete combustion is insured by thorough mixture. This is accomplished by taking the illuminating gas and air, in proper proportion, into the compressing pump together, and the mixture here made becomes more intimate in the reservoir, and in its progress towards the point at which it does its work. The constantly burning jet already described insures prompt ignition on entering the cylinder.

'. . . the engine rated at 5 HP developed, as a maximum, rather more than its rated power. Its mean power during the test, as determined by the dynamometer, was 3·986 HP, the indicator showing at that time 8·62 HP developed in the cylinder. The amount of gas consumed averaged 32·06 cubic feet per indicated HP per hour.

'The excess of indicated over dynamometric HP is to be attributed to the work of driving the compressing pump and to the friction of the machine.

'The greater portion of this appears both in debit and credit side of the account, since, although expended in the compressing pump, it is restored again in the driving cylinder.'

The consumption of 32·06 cubic feet per horse hour is incorrect; it is obviously unfair to include the pump diagram in the gross power. The author has tested an engine of similar construction and dimensions; he finds the friction of the mechanism to be about 1-horse; adding this number to the dynamometric power of Prof. Thurston, the legitimate indicated power may be taken as 5 HP, the consumption is therefore $\frac{8{\cdot}62 \times 32{\cdot}06}{5{\cdot}0} = 55{\cdot}2$; and the gas per brake HP per hour is $\frac{8.62 \times 32{\cdot}06}{3{\cdot}986} = 69{\cdot}3$. These numbers, although showing improvement upon the Lenoir and Hugon, prove that the engine was much inferior in economy to the Otto and Langen engines.

Max. press. 68 lbs. per sq. in.

Fig. 44.

Fig. 45. – Diagrams from Brayton's Gas Engine.

Mr. H. McMutrie, Consulting Engineer at Boston, took diagrams from an engine of similar dimensions which confirm these results. Fig. 44 is the diagram taken with full load, fig. 45 the diagram from the motor with no load on, the power being just sufficient to overcome friction and pump losses.

FULL LOAD DIAGRAM.

Area of piston	50·26 sq. ins.
Speed of piston	180 ft. per min.
Mean pressure	33 lbs. per sq. in.
Pressure in reservoir	75·4 lbs. per sq. in.
Initial pressure in cylinder	68 lbs. per sq. in.
Gross power developed	9 HP.

NO LOAD DIAGRAM.

Speed of piston	180 ft. per min.
Mean pressure	18 lbs. per sq. in.
Friction and other resistance	4·87 HP.
Net available power	9 − 4·87 = 4·13

This power agrees closely with the actual determination by dynamometer.

The author has made a careful trial of a Brayton petroleum engine rated at 5-horse. The engine was made by the 'New York and New Jersey Ready Motor Company;' it was sent to Glasgow and the following test was made at the Crown Ironworks on the 21st and 22nd February, 1878. The motor cylinder is 8 inches in diameter and the stroke 12 inches; the pump cylinder is also 8 inches diameter but the stroke is 6 inches.

Diagrams were taken from both pump and motor by a well-made Richards' indicator. At the same time the dynamometer was applied to the fly wheel fully loading the engine, readings were taken at regular intervals. The revolutions were recorded by a counter. The petroleum used was measured in a graduated glass vessel.

The results are as follows:

TEST OF BRAYTON PETROLEUM ENGINE. (*Clerk.*)

Petroleum consumed during one hour	1·378 gallons.
Mean speed of engine	201 revs. per min.
Mean dynamometer reading	4·26 HP.
Mean pressure, power cylinder	31 lbs. per sq. in.
Mean pressure, air pump	27·6 lbs. per sq. in.
Piston speed, motor	201 ft. per min.
Piston speed, pump	100·5 ft. per min.
Power indicated in motor	9·49 HP.
Power indicated in pump	4·10 HP.
Available indicated power	5·39

The power by the dynamometer is 4·26-horse; therefore the mechanical friction of the engine is 5·39 − 4·26 = 1·13 horse.

Consumption of petroleum . . .	0·255 galls. per IHP per hr.
Consumption of petroleum . . .	0·323 galls. per actual HP per hr.

Figs. 46 and 47 are diagrams from the motor and pump, which are fair samples of those taken. It will be observed that considerable throttling occurs in entering the motor cylinder; the pump pressure is higher than the reservoir pressure, and the motor pressure is lower, so that a double loss has been incurred. The principle of the engine is so good that the author anticipated better results. Great improvement could be obtained by reproportioning the valves and air passages; they are in this engine much too small and cause needless resistance and loss. The maximum pressure in the motor cylinder is 48 lbs. per square inch, which remains steadily till the inlet valve shuts at four-tenths of the stroke: the pressure then slowly falls as the gases expand, the exhaust valve opening at about ten pounds per square inch above atmosphere.

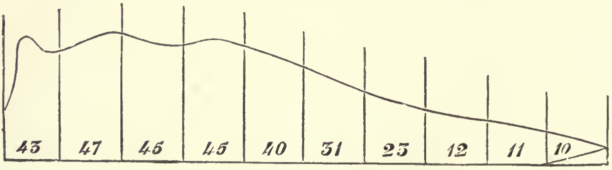

Mean pressure 30·2 lbs. per sq. in. 8 ins. dia. cylinder. Stroke 12 ins. 200 revs. per min.

FIG. 46.—Brayton Petroleum Engine. Motor Cylinder.

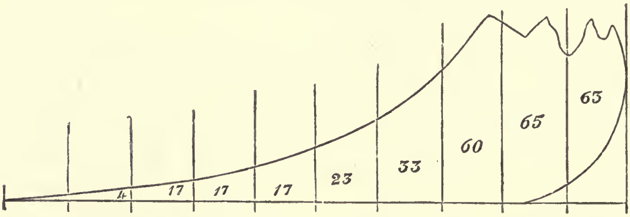

Mean pressure 27·6 lbs. per sq. in. 8 ins. dia. cylinder. Stroke 6 ins. 200 revs. per min.

FIG. 47.—Brayton Petroleum Engine. Pump Cylinder.

The average available pressure upon this diagram is 30·2 lbs.

per square inch. The air pump shows a maximum pressure of 65 lbs. per square inch, the reservoir pressure being 60 lbs. The average resistance is 27·6 lbs. per square inch; as the pump is half the stroke of the motor and equal to it in area, the pressure to be deducted is $\frac{27 \cdot 6}{2} = 13 \cdot 8$ and $30 \cdot 2 - 13 \cdot 8 = 16 \cdot 4$. The actual available pressure actuating the engine is therefore only 16·4 lbs. per square inch. The effect of the clearance in the pump cylinder is noticeable upon the diagram; the air inlet valve does not open till one-tenth of the down stroke is completed.

The theoretic efficiency of this type, with a maximum temperature of 1600° C., compression of 60 lbs. per square inch above atmosphere, and motor cylinder of twice the pump volume, is 0·30; the efficiency of the gas in the mixture commonly used, 1 volume gas 7 volumes of air, is 0·40 (p. 113); so that if the conditions of loss by cooling are no worse than in the author's explosion experiments, and the diagram appeared perfect, the actual indicated efficiency would be $0 \cdot 30 \times 0 \cdot 40 = 0 \cdot 12$. That is, the engine should convert 12 per cent. of the heat it gets as gas or petroleum into indicated work. But the diagram is imperfect in many ways. Using the mixture it does, the diagram should show a maximum temperature of 1600° C. at least; in reality the highest temperature is only 840° C. The flame is entering the cylinder at an actual temperature of 1600° C. during the whole period of admission, but the convection has so greatly increased by the mixing effect of the entering current that greatly increased cooling results; accordingly, when the gases are fully admitted and the inlet valve is closed, the gases have only a temperature of 840° C. instead of 1600° C. After admission ceases, the expansion line from 45 lbs. to 10 lbs. pressure is far above the adiabatic, indeed it is isothermal, the combustion is proceeding and the small igniting flame also is helping to sustain the temperature.

It is therefore quite evident that the loss of heat is much greater than that occurring during explosion in equal time. The correction of the theoretic efficiency indicated by the author's closed vessel experiments is insufficient, 0·12 is much above the actual efficiency. Taking the heating value of the American coal gas used in Prof. Thurston's experiments as 10,900 heat units per unit weight of gas burned, and one pound of it as measuring 30 cubic feet, then as the engine used 55 cubic feet per IHP per hour, its efficiency is 0·071; that is, it converts 7·1 per cent. of the heat given to it into work.

This is a poor result for a cycle having so high a theoretic efficiency, and in the author's experiments with petroleum it is even worse.

The sp. gravity of the petroleum was 0·85, therefore the weight of one gallon is 8·5 lbs. As 0·255 gallons are burned per indicated horse power per hour, this amounts to $8{\cdot}5 \times 0{\cdot}255 = 2{\cdot}16$ lbs. of liquid fuel per IHP per hour. One pound gives out 11,000 heat units, and for one horse power for one hour 1424 units are required; the actual indicated efficiency is therefore

$\frac{1424}{2{\cdot}16 \times 11000} = \frac{1424}{23760} = 0{\cdot}06$ nearly; that is, 6 per cent. of the whole heat given to the engine is accounted for by the power developed in the motor cylinder.

If there were no losses of heat to the cylinder, or losses by throttling during the inlet and transfer of the air from the pump to the motor or loss of heat from the reservoir to the atmosphere, then the efficiency of this type of engine would be 30 per cent. These losses in practice reduce it to 6 per cent. The cycle is a good one, and under other circumstances is capable of better things, but it is quite unsuitable for a cold cylinder engine. Cooling and undue resistance are the main causes of the great deficit.

The gases entering the cylinder as flame, in passing through the inlet chamber expose a large surface to the action of the water jacket; the entering currents also impinge against the piston, causing more rapid circulation than ordinary convection. Both causes intensify the cooling action of the cylinder walls. In the engine tested by the author the communicating pipes and the motor admission valve were much too small; a considerable loss of pressure resulted; although the reservoir pressure was 60 lbs., that in the cylinder never exceeded 48 lbs. above atmosphere, showing a loss of 12 lbs. per square inch from undue resistance. To enable this engine to realise the advantages of its theory considerable modifications in its arrangements are required. Notwithstanding all difficulties it has done much useful work, not the least notable being the assistance it rendered to Prof. Draper during his investigation on the existence of non-metallic bodies in the sun's atmosphere. He used a Brayton petroleum engine for driving his dynamo machine, and he stated in his paper that its ease of starting and almost absolute steadiness in driving were of the greatest service to him. In steadiness he states that 'it acted like an instrument of precision.'

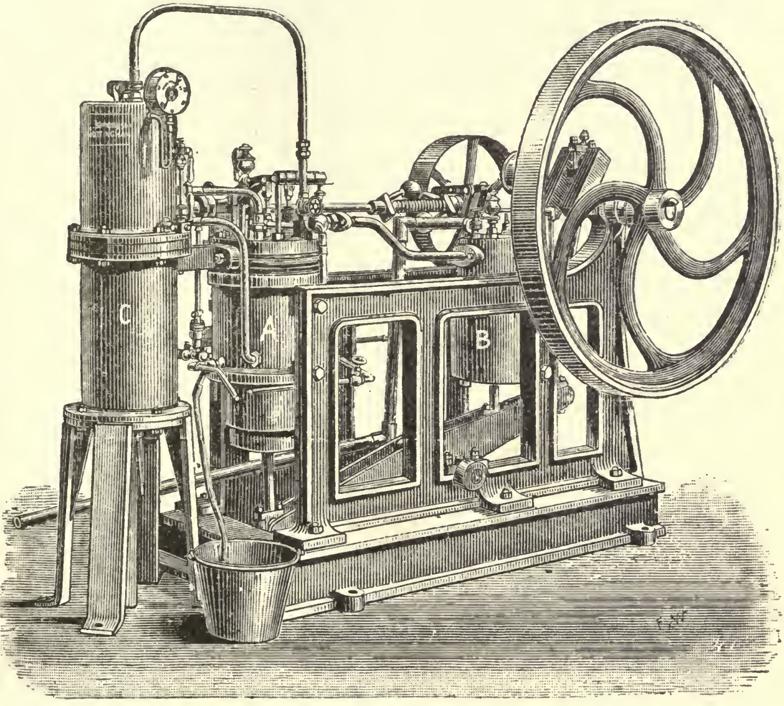

FIG. 48.—Simon Engine.

Simon Engine.—Messrs. Simon, of Nottingham, introduced the Brayton engine to England in a slightly altered form as a gas engine. In addition to the ordinary arrangements of the engine they attempted to gain increased economy, by causing the waste heat passing into the water jacket, and the heat of the exhaust gases, to be utilised in raising steam. They would undoubtedly have increased the economy of the engine in this manner had they not turned the steam so raised into the motor cylinder along with the flame. The cooling of the flame which was serious enough in the original was thus made worse, and but slight gain could result, the loss by cooling being slightly exceeded by the increase of volume due to the steam. Fig. 48 is an external view of the engine as exhibited at the Paris Exhibition of 1878. A is the motor, B the pump, and C the added boiler; the steam was raised in it and the water jacket. With a suitable arrangement using the steam in a separate cylinder, doubtless 6 per cent. might be added to the indicated efficiency of the engine, but it is very questionable if the increased complexity does not entirely destroy any advantage gained; it certainly does so in small engines. When very large engines come to be constructed the complexity would not be so great and it would be well worth while to use waste heat in steam raising. The engine, although instructive, did not successfully overcome the difficulties which caused the abandonment of the Brayton as a gas engine. Fig. 49 is a diagram from the engine which forcibly illustrates the effect of the cooling.

7 ins. dia. of cylinder; 240 ft. per min. piston speed. Scale $\frac{1}{24}$ in.

FIG. 49.—Diagram from Simon Engine.

TYPE III.

Engines of this kind resemble those just discussed, in the use of compression previous to ignition, but differ from them in igniting at constant volume instead of constant pressure; that is, the whole volume of mixture used for one stroke is ignited in a mass instead of in successive portions.

The whole body of mixture to be used is introduced before any portion of it is ignited; in the previous type the mixture is ignited as it enters the cylinder, no mixture being allowed to enter except as flame. In Type III. the ignition occurs while the volume is constant; the pressure therefore rises; it is an explosion engine in fact, like the first type, but with a more intense explosion due to the use of mixture at a pressure exceeding atmosphere.

The most obvious means of applying the method is that suggested by the Lenoir engine. The addition of a pump taking mixture at atmospheric pressure, compressing it into a reservoir from which it passes to the motor cylinder at the increased pressure, seems a simple matter. The igniting arrangements would act as in the original. As the gases are under pressure, the piston would take its charge into the cylinder in a smaller proportion of the forward stroke, and so more of the motor stroke would be available for useful effect. The diagram such an engine should produce is seen at fig. 15, p. 50; the shaded part is the available portion, the other part is the pump diagram. The theoretic efficiency of such an engine is as good as the type can give. The patent list shows that it was the first proposed after Lenoir. Many such engines have been attempted and have given very good results economically, but the difficulties of detail are considerable, the greatest being the necessity for the intermediate reservoir. Million's patent 1861 proposes to do this, the present author also constructed one of this kind in 1878, and later one was made by Mr. Atkinson. The difficulties, however, are too great to allow the success of small motors on the plan.

Mr. Otto, the first to succeed with the free piston engine, was also the first to succeed in adapting compression in a reliable form.

In the third type are included all engines having the following characteristics, however widely the mechanical cycle may vary :

Engines using a gaseous explosive mixture, compressed before ignition, and ignited in a body, so that the pressure increases while the volume remains constant. The power is obtained by expansion after the increase of pressure.

Otto Engine.—In this gas engine, the first to combine the compression principle with a simple and thoroughly efficient working cycle, the difficulties of compression are overcome in a strikingly original manner. To the engineer accustomed to the steam engine, the main idea seems a bold and indeed a retrograde step. The early gas engines were moulded more upon the steam engine model and were to some extent double acting. The Lenoir and Hugon both received two impulses for every revolution, the Brayton was single acting, and the Otto is only half single acting. The steam engine in its advance passed from single to double acting, and then to four and even more impulses per revolution. The gas engine in its progress has in this respect moved backwards, beginning with double action and then going back. The gain of this arrangement, however, has completely justified the retrogression.

In external appearance the engine closely resembles a modern high pressure steam engine, the working parts of which are of somewhat excessive strength ; its motor and only cylinder is horizontal and open ended ; in it works a long trunk piston, the front end of which serves as a guide and does not enter the cylinder proper ; the connecting rod communicates between the guide and the crank shaft, the side thrust is thus kept off the piston and cylinder proper, which become hot. The crank shaft is heavy and the fly-wheel a large one ; considerable energy being required to take the piston through the negative part of the cycle. The cylinder is considerably longer than the piston stroke, so that the piston when full in leaves a considerable space into which it does not enter.

Outside the cylinder, running across it at the end of the space, works a large slide valve ; it is held against the cylinder face by a cover plate and strong spiral springs ; it is driven to and fro by a small crank, on the end of a shaft parallel to the cylinder axis,

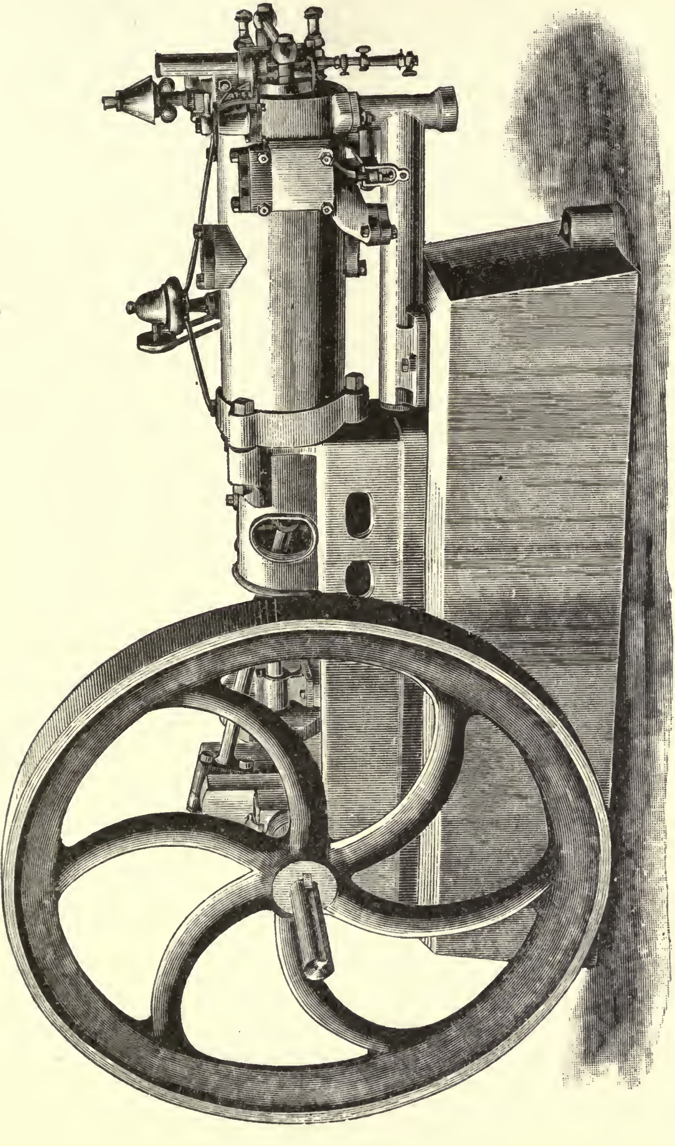

Fig. 50.—Otto Engine.

and rotating at half the rate of the crank shaft, from which it receives its motion by bevel or skew gearing.

An exhaust valve, leading into the space by a port, is also actuated at suitable times from the secondary shaft ; so are the governing and oiling gear.

The single cylinder serves alternately the purposes of motor and pump ; during the first forward stroke of the piston, the slide valve is in such position that gas and air stream into the cylinder from the beginning to the end of the stroke, the charge mixing as it enters with whatever gases the space may contain ; the return stroke then compresses the uniform mixture into the space, and when the piston is full in, the pressure has increased to an amount determined by the relative capacity of the space. Meantime the slide valve has moved to another position, first closing the admission gas and air ports, to permit of the compression, then bringing on a cavity in the valve which is filled with flame, when the compression is completed. The compressed charge therefore ignites and the pressure rises so rapidly that maximum is attained before the piston has moved appreciably on its forward stroke (second stroke) ; the piston is thus under the highest pressure at the beginning of its stroke and the whole stroke is available for the expansion.

This is the motive stroke. At the end of it, the exhaust valve opens and the return stroke is occupied in driving out the burned gases, except that portion remaining in the space which cannot be entered by the piston. These operations form a complete cycle, and the piston is again in the position to take in the charge required for the next impulse.

The cycle requires two complete revolutions, or four single strokes.

First out stroke.	Charging cylinder with gas and air.
,, in ,,	Compressing the charge into the space.
Second out stroke.	Explosion impelling piston.
,, in ,,	Discharging burned gases into atmosphere.

The regulation of the speed of the engine is accomplished by a centrifugal governor, which is arranged to close a gas supply valve whenever the speed increases. An explosion is thereby missed, and the engine goes through its cycle as usual, but as no

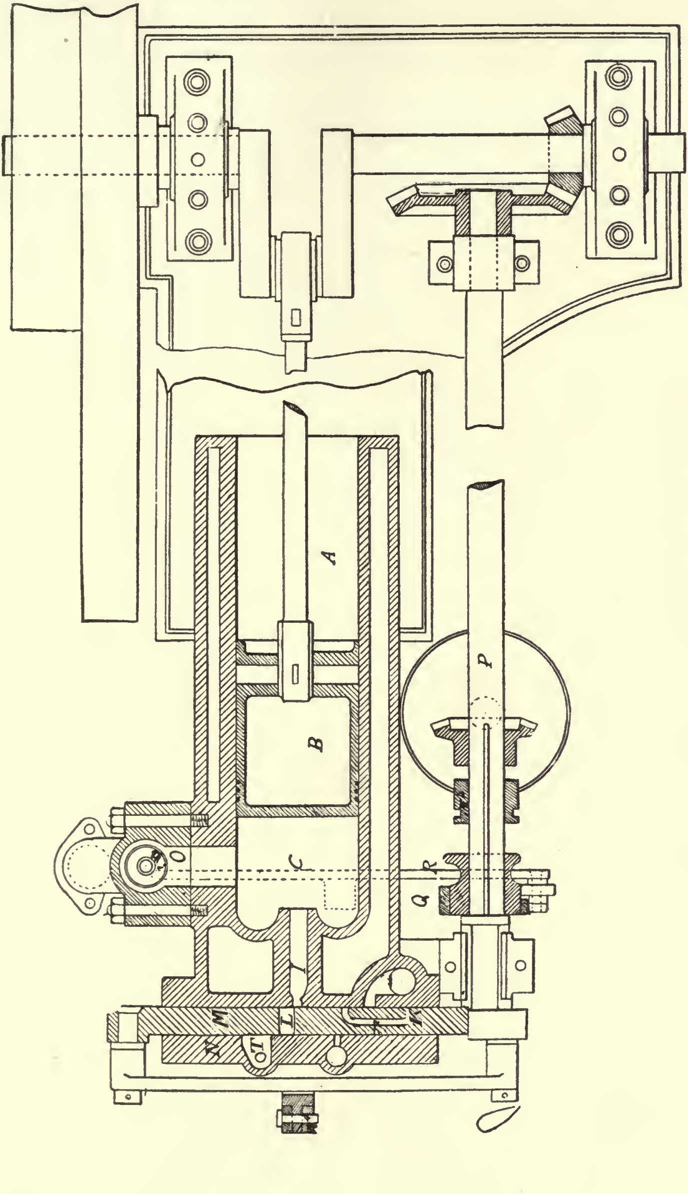

Fig. 51.—Otto Engine (Sectional plan).

gas is mixed with the air, there is no explosion when the flame enters, the compressed air merely expanding, giving back to the piston the energy taken during compression.

When running without load, 8 or even more revolutions may be made between the impulses, at full load 2 revolutions are made per impulse. Notwithstanding this irregularity the fly-wheel is so large that no variation observable by the eye can be seen while watching the engine.

Fig. 50 is an external elevation of an Otto engine.

Fig. 51 is a sectional plan, and fig. 52 an end elevation showing exhaust valve lever. A is the water-jacketed cylinder, B the piston shown full in, C is the compression space or cartridge space as it is called by Million; I the admission and ignition port, communicating alternately with the gas and air admission port K, and the flame port L in the slide M; N is the cover holding the slide to the cylinder face and carrying in it the external flame for lighting the movable one in flame port L. The exhaust valve is of the conical seated lift type and is seen at O; it is driven from the shaft P by the cam Q and the lever R. The other details are clearly shown upon the drawing. The ignition valve and governing arrangement will be described in a subsequent chapter; here it is sufficient to state that the governor withdraws a cam actuating the gas valve S, fig. 52, and so prevents it opening when the piston is taking in air. When open, the gas passes the valve, then through a row of holes in the valve port K, streaming into the air and mixing thoroughly with it as it enters the cylinder. To start the engine, the flame at T is lighted; the cock commanding the internal flame being properly adjusted, and the gas turned on, a couple of turns at the fly-wheel should cause ignition and set the engine in motion. The larger engines are provided with a second cam, which keeps the exhaust valve open during half of the compression stroke and so diminishes the work required to turn round the engine by hand. When the engine is started the wheel upon the lever is shifted to the normal cam and the compression then returns to its usual intensity.

Diagrams and Gas Consumption.—Dr. Slaby, of Berlin, has made a very careful trial of a four-horse power Otto engine at Mr. Otto's works, Deutz, in August 1881.

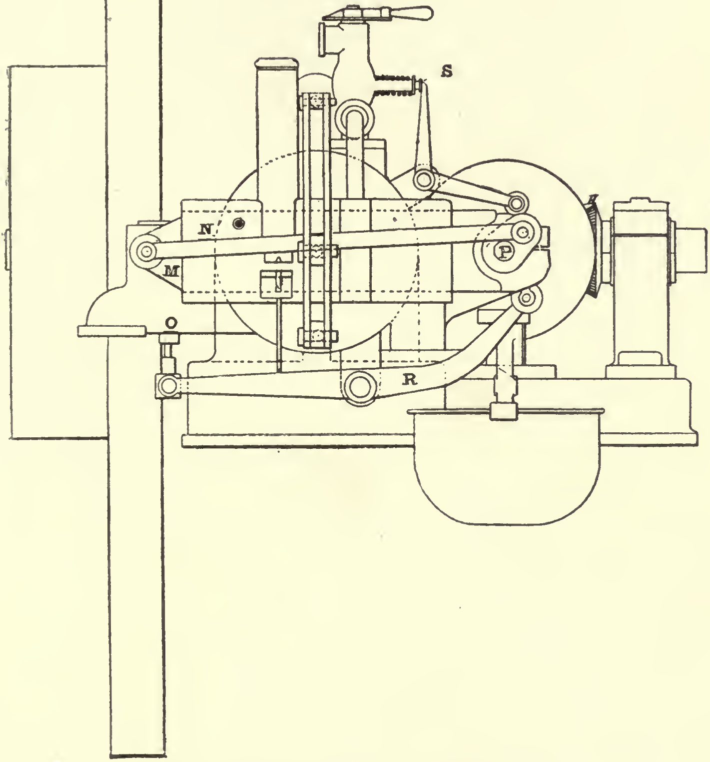

FIG. 52.—Otto Engine (End elevation).

The dimensions of the engine are :

Diameter of cylinder	171·9 millimetres.
Stroke	340 millimetres.
Compression space	4770 cb. centimetres.
Volume displaced by piston	7888 cb. centimetres.

The compression space is therefore 0·6 of the volume displaced by the piston. The results are briefly as follows :

Average revolutions during test	156·7 per minute.
Power indicated in cylinder	5·04 horse.
Power by dynamometer	4·4 horse.
Gas consumed in one hour	142·67 cb. ft.
Gas consumed in one hour by igniting flames	2·75 cb. ft.
Gas consumption per IHP per hour	28·3 cb. ft.
Gas consumption per effective HP hour	32·4 cb. ft.

The composition of the gas used at the Gasmotoren-Fabrik, Deutz, is given as—

	Volumes.
Marsh gas, CH_4	34·4
Ethylene, C_2H_4	3·5
Hydrogen, H	56·9
Carbonic oxide, CO	5·2
	100·0

and 1 cubic metre of it weighs 0·404 kilograms. One pound weight of it therefore measures 39·6 cubic feet. Deducting the latent heat of steam produced, 1 pound weight evolves heat enough to raise 12,094 lbs. of water, through one degree Centigrade. It evolves 12,094 heat units. From this value, and the experimental determination of the heat leaving the engine by way of the water jacket, Dr. Slaby calculates the disposition of 100 heat units given to the engine as follows :

Work indicated in cylinder	16·0
Heat lost to cylinder walls	51·0
Heat carried away by exhaust	31·0
Heat lost from engine by conduction and radiation	2·0
	100·0

The actual indicated efficiency of the engine is therefore 16 per cent. or 0·16.

The temperature of the gases expelled during the exhaust stroke was determined by carefully protecting the exhaust pipe from loss of heat by non-conducting material, and then seeing whether zinc or antimony would melt in it. Zinc melted but antimony did not; as the melting point of zinc is 423° C., and the antimony melting point is 432° C., the temperature of the exhaust gases is given with great accuracy as between these two temperatures. The average composition of the mixture is given as 1 vol. coal gas to 13·73 vols. of air and other gases. Here Dr. Slaby is plainly in error, as his own figures conclusively show. The volume of coal gas taken into the engine at each stroke as measured by the gas meter is given as 859 cubic centimetres, the total volume swept by the piston of the engine per stroke is 7888 cubic centimetres, the volume of the compression space 4770 cubic centimetres. Now if the gas be introduced into the cylinder while it is filled completely, space included, with cold gases, at the same temperature as the gases when measured by the meter, this figure is correct enough. But the gases are not so introduced, the space is already filled with exhaust gases at a temperature of about 400° C. by Dr. Slaby's own determination; this volume must therefore be calculated to atmospheric temperature before an approach to the true ratio can be obtained. Taking atmospheric temperature at 17° C., then 4770 cubic centimetres of burned gases at 400° C. becomes reduced to 2055 cubic centimetres at 17° C.; that is, the total charge will consist of 859 cubic centimetres of coal gas, 7029 cubic centimetres of air, and 2055 cubic centimetres of burned gases from the previous explosion.

The ratio is

$$\frac{\text{coal gas}}{\text{air and burned gases}} \quad \frac{859}{7029 + 2055} = \frac{1}{10{\cdot}5}$$

The composition of the charge is more correctly represented as 1 vol. of gas to 10·5 vols. of air and other gases. Even here, however, the dilution is overstated, as it is assumed that the piston has taken in the charge at full atmospheric temperature and pressure. But there is some throttling in passing through the admission valve and port, and also some heating of the air by striking the piston and cylinder walls. Professor Thurston, in experiments to be described later on, proves this to be the case, and shows that the charge is even stronger than has been calculated.

It has been already proved that in this type of engine, expanding after compression and explosion to the same volume as existed before compression, the theoretic efficiency is independent of the temperature of the explosion or the temperature existing before compression, and depends only upon the volume before and after complete compression. As the ratio of compression space to volume swept by the piston is 0·6 to 1, the volume before compression is 1·6, volume after compression 0·6.

The theoretic efficiency is (p. 53) $E = 1 - \left(\frac{v_c}{v'_o}\right)^{y-1}$, and v_c is the compression volume, and v_o the volume before compression; in this case $E = 1 - \left(\frac{0·6}{1·6}\right)^{·408}$ or $1 - \left(\frac{1}{2·66}\right)^{·408}$; here $E = 0·33$.

That is, if all the heat were given to the engine at the moment of complete explosion at the beginning of the stroke, and no heat were lost to the cylinder during the expansion to the original volume, then 33 per cent. of that heat would be converted into indicated work. But the author's explosion experiments give the factor necessary for correcting this theoretical number (p. 113). Taking the mixture of 1 gas to 10 vols. air as nearest, the efficiency of the gas in it is 0·46; that is, during the time of the forward stroke, taken as 0·2 sec., 1 vol. of gas is required to produce and keep up a pressure which 0·46 vol. would suffice for if it was all applied to heating and no loss by cooling.

The actual indicated efficiency of the engine using this mixture and this expansion and compression should be $0·33 \times 0·46 = 0·152$ nearly. That is, the engine should convert 15·2 per cent. of the heat given to it into work. Dr. Slaby's number, found by experiment, is 16 per cent. The numbers are exceedingly close.

The mechanical efficiency of the engine is high, the ratio of dynamometric to indicated power being 87 to 100, and the friction of the engine only 0·64 horse.

PROFESSOR THURSTON'S EXPERIMENTS ON A 6 HP OTTO ENGINE.

Dr. Slaby's experiments are exceedingly complete, but Professor Thurston in America has made even more extended measurements.

Messrs. Brooks and Steward made the trials under the direction of Professor Thurston, at the Stevens Institute of Technology, Hoboken. The dimensions of the engine are as follows :

Diameter of cylinder	8·5 ins.
Stroke	14 ins.

Capacity of compression space 38 per cent. of total cylinder volume.

Not only was the gas entering the engine measured, but at the same time the air required was measured through a 300 light meter. So far as the author is aware, this is the only set of experiments in which this was done ; it is by far the most accurate way of getting the true proportions of the explosive mixture.

The temperature of the exhaust was measured by a pyrometer, and the power determined, both by indicator and dynamometer ; at the same time the heat passing into the walls of the cylinder was determined by measuring the water heated and estimating the loss by radiation and conduction.

The total number of revolutions during the various tests were taken by a counter. Many trials were made under varying conditions of load and mixture used. The following is the best full-power trial, giving the most economical results :

Average revolutions during test	158 per minute.
Power indicated in cylinder	9·6 horse.
Power by dynamometer	8·1 horse.
Gas consumed in one hour	235 cb. ft.
Gas consumption per IHP per hour	24·5 cb. ft.
Gas consumption per effective HP per hour	29·1 cb. ft.

An analysis of the gas used during the trials made by Thomas B. Stillman, Ph.D., is as follows :

Hydrogen, H	39·5
Marsh gas, CH_4	37·3
Nitrogen, N	8·2
Heavy hydrocarbons, C_2H_6, &c.	6·6
Carbonic oxide, CO	4·3
Oxygen, O	1·4
Water vapour and impurities (H_2O, CO_2, H_2S)	2·7
	100·0

One cubic metre of this gas weighs 0·606 kilograms. One pound weight of it therefore measures 26·43 cubic feet. One pound when completely burned evolves heat enough to raise 9070 lbs. water through 1° C.

The air necessary to supply just enough oxygen for the complete combustion of 1 vol. of this gas is 5·94 vols.

From these values and experiments upon temperature of the exhaust gases, Professor Thurston estimates the disposition of 100 heat units by the engine as follows:

Work indicated in cylinder	17·0
Heat lost to cylinder walls	52·0
Heat carried away by exhaust gases	15·5
Heat lost from engine by conduction and radiation	15·5
	100·0

The actual indicated efficiency is therefore 17 per cent.

The number showing the proportion of heat passing into the water jacket is also very nearly Slaby's, but the amount expelled with the exhaust is much understated. The amount lost by radiation is overstated.

The temperature of the exhaust gases, as determined by a pyrometer placed in the exhaust pipe, varies in the experiments at full load from 399° C. to 432° C., thus practically coinciding with Slaby. The ratio of air to gas was found, by actual measurement of both, to be about 7 to 1 when the engine was working most economically. Although with better gas the ratio would be slightly increased, yet it could not equal that usually given for the Otto engine, 10 to 1 or thereabouts.

The ratio is commonly obtained from a measurement of the gas consumption alone, the air being reckoned as the volume of the piston displacement, less the measured amount of gas. This is not an accurate method, for the reason already stated.

If the mixture filling the cylinder mingles with the burned gases filling the compression space, then the average composition of the charge is 1 vol. coal gas to 9·1 vols. of other gases.

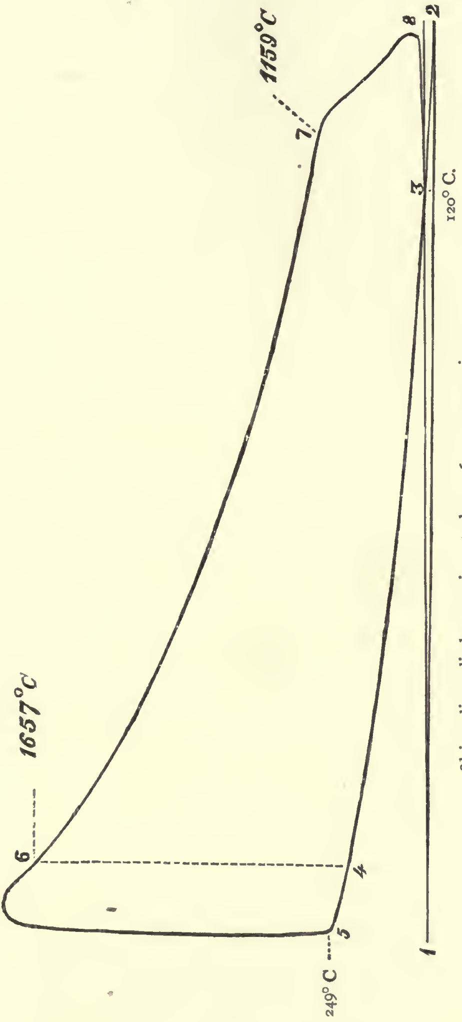

8½ ins. dia. cylinder. 14 ins. stroke. 160 revs. per min.

FIG. 53.—Normal Indicator Diagram. From 6 HP Otto Engine (Thurston).

Fig. 53 is a fair sample of the diagrams obtained during Professor Thurston's tests while the engine was giving full power. The piston while moving from the point 1 to the point 2 takes in the charge; the pressure in the cylinder falls below atmosphere as the piston approaches the end of its stroke. This is due to the resistance of the valve port to entering air and gas. The piston returns from 2 to 5 (1st in-stroke) compressing the charge, the pressure increasing to atmosphere at the point 3, the compression being complete at the point 5; the ignition then occurs, and the pressure and temperature rapidly rises as the explosion progresses; the temperature does not attain its maximum till the piston has moved forward a little and has reached the point 6. From that point to 7, when the exhaust valve opens, the expanding line is as nearly as possible adiabatic. The temperatures are marked at each point of the diagram. The return stroke from 2 to 1 discharges the products of combustion. This is the second in-stroke, completing the cycle and leaving the engine in position to again take in the charge.

The diagram shows the whole changes occurring during two complete revolutions of the machine while fully loaded. Fig. 54 shows what occurs when the governor acts, when the engine is at less than full load. The smaller diagram, B, is the normal one, and the larger, A, the intermittent one; the gas has been completely cut off for several strokes, and so the hot burned gases in the compression space have been completely discharged and replaced by pure air at a temperature not far removed from atmospheric; the explosion then causes a higher pressure by nearly half an atmosphere, although the maximum temperature is less than in the usual case.

The temperature of the charge before explosion being less, a smaller increase is required to produce a given increase of pressure. Professor Thurston calculates that the heat accounted for by the diagram is 60 per cent. of the total heat supplied to the engine; the deficiency he attributes to the phenomena of dissociation, which prevents the complete evolution of the heat at the highest temperature, but permits further combustion when the temperature falls. The amount of gas required to run at full speed, 166 revolutions per minute without any load, was found to be from 50 to 70 cubic feet per hour.

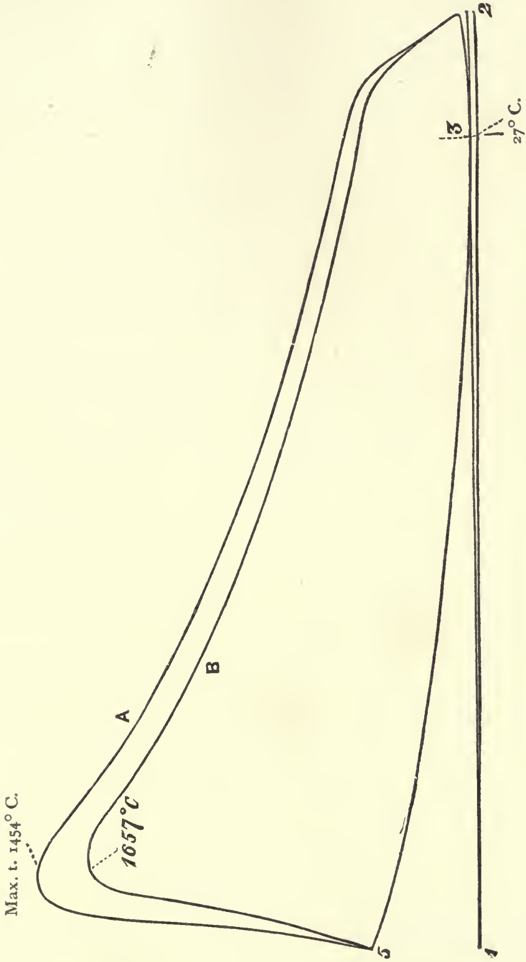

FIG. 54.—Diagram with regular and with intermitted action. 6 HP Otto Engine (Thurston).

Other tests of Otto Engine.—The experiments of Dr. Slaby and Professor Thurston upon the Otto engine are by far the most complete which have yet been made to the author's knowledge.

Some tests given in Schöttler, however, will be quoted. A four HP engine was found to consume as a best result 32·4 cubic feet of gas per brake HP per hour in Altona, giving at the time 3·96 HP on the dynamometer. Another consumed 33·7 cubic feet per brake HP per hour in Hanover, giving 4·95 HP on the dynamometer; to drive the last engine at 160 revolutions per minute without load required 41·3 to 43·4 cubic feet of Hanover gas.

A two-horse engine, tested by Brauer and Slaby, Berlin, gave 2·28 brake HP, using 35·3 cubic feet per brake HP per hour.

In this country the coal gas in common use is of higher heating value than that used on the Continent and in America; accordingly the gas required per HP is less, but the efficiency is almost identical.

Experiments made upon an 8 HP Otto engine by the Philosophical Society of Glasgow in 1880, showed a consumption of 22 cubic feet of Glasgow gas per indicated HP, giving 9 HP upon the dynamometer, and 28 cubic feet per dynomemetric horse.

Experiments made at the Crystal Palace Electrical Exhibition, in 1881, with a 12 HP engine gave a maximum brake power of 18·3 HP, with a gas consumption of 23·7 cubic feet per IHP, and 29·1 cubic feet per brake HP. With a two-horse engine, 2·87 brake horse was obtained upon 33·4 cubic feet per horse hour, and 27·9 cubic feet per indicated horse hour.

The consumption running without load does not seem to have been taken in these tests.

The author has taken the consumption of a two-horse engine running without load in London, at 160 revolutions per minute, as 32 cubic feet per hour, and a 3·5 horse engine without load at 166 revolutions per minute as 43 cubic feet per hour.

The Messrs. Crossley give the following as the results with their new Otto twin engine rated at 12 HP:

Power by dynamometer	23 horse.
Power indicated in cylinders	28 horse.
Gas consumption per indicated HP . . .	20 cb. ft. per hour.
Gas consumption per effective HP . . .	24·3 cb. ft. per hour.
Total consumption at full power	560 cb. ft. per hour.
Total consumption when running without load at 160 revs. per minute	100 cb. ft. per hour.

Engine No. 6329.

Nominal HP	8
Diameter of cylinder	9 ins.
Stroke	16 ins.
Revolutions per minute	154
Brake HP	9·08
Indicated HP	14·26
Gas per IHP hour	19·4
Gas per brake HP hour	28·0
Total consumption without load per hour	75 cb. ft.

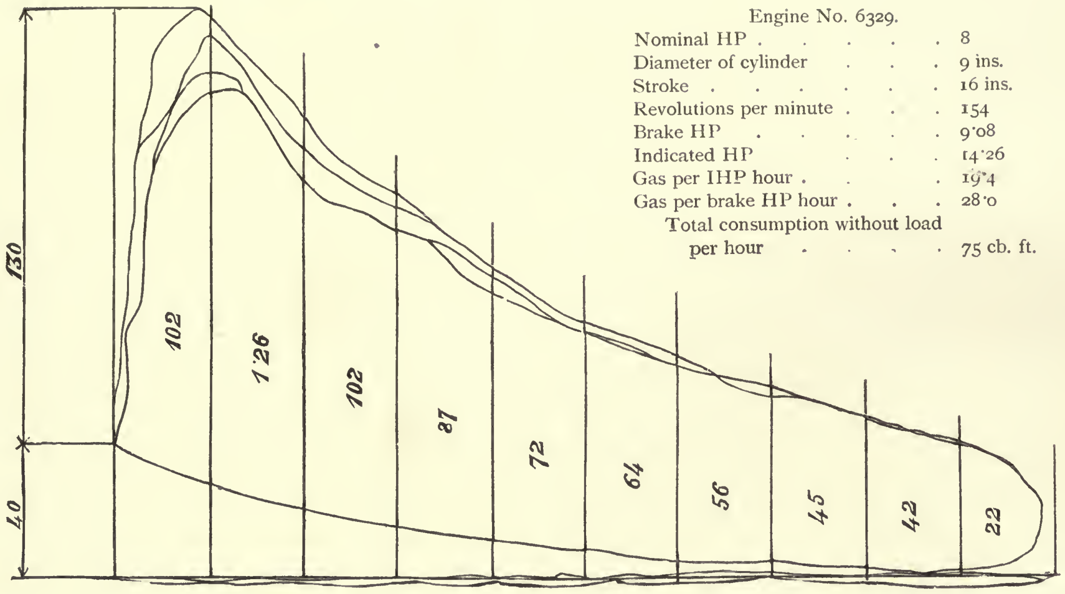

FIG. 55.—Diagram from 8 HP Otto Engine (Garrett).

These results are obtained using Manchester gas.

Mr. G. H. Garrett has made a trial with an 8 HP Otto engine in Glasgow, the diagram and particulars of which are given on fig. 55.

Summary of Experiments.—From these numerous and careful experiments, conducted quite independently of each other by many observers, it may be taken as abundantly established that the Otto engine is a great advance in economy and certainty of action upon any gas engine preceding it. On the Continent and in America the consumption per horse power hour is, on the whole, greater than in Britain ; this is due not to any appreciable difference in the efficiency of the engines made here, but to the better gas common in this country.

Calculations of the efficiency attained in some of the later engines in England, show that as much as 18 per cent. of the heat is converted into work as shown by the indicator. Dr. Slaby's value is 16 per cent., and Professor Thurston's 17 per cent. All observers agree that the heat liberated at the moment of completed explosion, that is, of highest temperature, is roughly one-half of the total heat present as coal gas, the remaining half being evolved during the expansion period. Professor Thurston gives the heat of the explosion as 60 per cent. of the total heat present, Dr. Slaby as 55 per cent. The author's experiments upon the heat evolved by the explosion of different mixtures of gas and air, show heat accounted for by the explosion as ranging from 50 to 60 per cent., agreeing with the determinations of Bunsen, Hirn, Mallard and Le Chatelier, and Berthelot and Vieille. It may therefore be considered as absolutely proved that this suppression of heat at explosion, and its evolution during expansion, is a phenomenon inherent in every explosive mixture, however made—a thing, in fact, from which there is no escape. In whatever way an engine be made, if it explodes or burns a mixture of any inflammable gas with any mixture of gases containing oxygen, then this slow combustion or, as the Germans have it, nachbrennen (after-burning) is unavoidably occasioned. Knowing this, and knowing of Hirn, Bunsen, and Mallard and Le Chatelier's work long precedent to Dr. Slaby's report, it is surprising to find so able and learned a scientist quoted as stating that in the Lenoir engine the whole heat was evolved at the moment of complete explosion. In the Lenoir, as in every other gas engine which has ever been constructed, not more than one-half of the whole heat of the gas present is then evolved, the remaining heat being evolved on the expanding stroke.

Schöttler falls into the same error, and, although mentioning Wedding's statement of Bunsen's law of dissociation, shows that he rejects it when he assumes that the whole heat is evolved. A very cursory examination of the Lenoir diagram would at once prove to Prof. Schöttler that Lenoir did not succeed in so escaping the laws of nature; had he done so, there would have been no necessity for our modern improvements.

The consumption of continental gas may be taken as varying between 32 cb. ft. and 35 cb. ft. per effective HP per hour, and about 28 cb. ft. per IHP per hour.

In Britain it may be taken as ranging from 24 cb. ft. per effective HP to 33 cb. ft., and 20 to 24 cb. ft. per IHP per hour, depending upon the quality of gas used and on the dimensions of the engine tested. Other things being equal, better results are obtained with large engines. The theoretic efficiency is constant for both large and small engines where the same compression is in use, but the loss of heat from the explosion to the sides of the cylinder is less in the large engines, due to the diminished surface exposed in proportion to the volume used. The effect is to increase the efficiency of the gas in the mixture used, a smaller quantity being necessary to make up for the loss of heat.

The indicator diagrams prove the very efficient nature of the Otto cycle. The great simplicity attained by the alternate use of the cylinder as pump and motor diminishes the number of valves necessary, and secures the minimum resistance to the entering gases, while entirely preventing any loss due to ports, in transferring the gases from one cylinder to another. The carrying out of the cycle is mechanically almost perfect, no work being spent which is not included in the theory. Again, the piston is full in at the moment of ignition and is almost at rest; the heat, producing maximum temperature, is therefore added at nearly constant volume. The highest pressure which the gas present is capable of producing is therefore attained at the beginning of the stroke simultaneously with the highest temperature; the succeeding expansion is then very rapid, and so no unnecessary waste of heat occurs, the temperature being rapidly depressed by work being done. The united effect of all the arrangements is seen in a diagram which is almost theoretically perfect; the only deduction from theory is due to the unfortunate property of explosive mixtures of continued combustion after explosion. And this reduces the theoretic efficiency to one-half in practice. The theoretic efficiency of all Otto engines, of whatever dimension, is 0·33, as the compression space in all cases bears nearly the ratio of 0·6 to 1·0 when compared with the cylinder volume which is swept by the piston. The actual indicated efficiency is very nearly one-half of that number.

If combustion by any means could be made complete at the highest temperature and pressure at the beginning of the stroke, instead of continuing as it does well into the expansion stroke, then greatly increased economy would result, and in large engines theory might be very nearly approached.

This point will receive further discussion later on.

Clerk Engine.—Otto's method is probably the readiest and easiest solution of the problem of attaining in a practicable manner the advantages of compression; in some points, however, the advantages are accompanied with compensating disadvantages.

Only one impulse for every two revolutions is obtained; the engine is therefore stronger and heavier than need be if impulse every revolution were possible. It is also more irregular in its action than more frequent impulses would give.

The Clerk engine was invented by the author with the view of obtaining impulse at every revolution, while getting at the same time the economy due to compression.

At first blush it seems a very simple matter to make a compression gas engine to give an impulse for every revolution; this was the author's opinion when he commenced work for the first time upon gas engines using compression in October 1876. Since then he has had occasion to modify the opinion: the difficulties are very great; any engineer who doubts this will speedily be convinced upon making the attempt.

It was not till the end of 1880 that the author succeeded in producing the present Clerk engine; before that time he had several experimental engines under trial, one of which was exhibited at the Royal Agricultural Society's show at Kilburn in July 1879. This engine was identical with the Lenoir in idea, but with separate compression and a novel system of ignition.

The Clerk engine at present in the market was the first to succeed in introducing compression of this type, combined with ignition at every revolution; many attempts had previously been made by other inventors, including Mr. Otto and the Messrs. Crossley, but all had failed in producing a marketable engine. It is only recently that the Messrs. Crossley have made the Otto engine in its twin form and so succeeded in getting impulse at every turn.

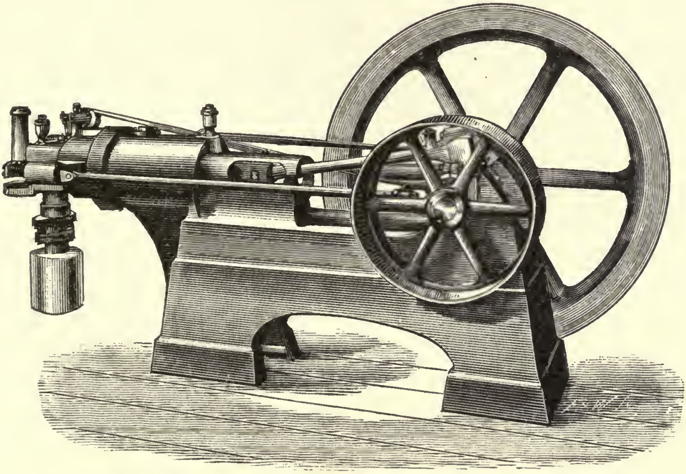

FIG. 56.—The Clerk Gas Engine.

In the Clerk engine the whole cycle is completed in one revolution, and an impulse given to the crank on every forward stroke of the piston, when working at full power.

The engine contains two cylinders, one for producing power, the other for taking in the combustible charge and transferring it to the power cylinder. At the end of the motor cylinder is left a compression space of a conical shape, and communicating with the charging or displacing cylinder by a large automatic lift-valve opening into the space ; at the other end of the cylinder are placed V-shaped ports opening to the atmosphere by the exhaust pipe ; the motor piston, when near its outer limit, overruns these ports and allows the cylinder to discharge. The pistons are connected in the usual manner by connecting rods, the motor to the main crank of the engine, the displacer to a crank pin in one of the arms of the fly-wheel; the displacer crank is in advance of the motor crank, in the direction of motion of the engine, by a right angle. The displacer piston on its forward movement takes in its charge of gas and air, and has returned a fraction of its stroke when the motor piston uncovers the exhaust ports. While crossing the centre, opening and shutting these ports the displacer piston has moved in almost to the end of its cylinder, discharging its contents into the space and forcing out at the exhaust ports the products of the previous ignition. The proportions of the two cylinders are so arranged that the exhaust is as completely as possible expelled, and replaced by cool explosive mixture, which thoroughly mixes with any exhaust remaining, cooling it also to a considerable extent. Care must be taken in the arrangement of the parts that an excessive volume is not sent from the displacer, otherwise it may reach the exhaust ports and gas discharge unburned.

The return stroke of the motor piston now compresses the mixed gases, and when at the extreme end, the igniting valve fires the mixture, the piston moves forward under the pressure thereby produced, till the opening of the exhaust ports causes discharge and replacement as before. In this way an impulse is given at every revolution, and the motive power applied to greater advantage. The motor cylinder is surrounded by water for cooling, but this is unnecessary with the displacer, as it uses only cool gases. The pressures used are high, so that both motor piston and its connections are made very strong ; the pressure on the displacer piston is very little, so the connections are light. It is not a compressing pump, and is not intended to compress before introduction into the motor, but merely to exercise force enough to pass the gases through the lift valve into the motor cylinder, and there displace the burnt gases, discharging them into the exhaust pipe. The pressure to be overcome is only that due to resistance in the exhaust pipes and the lift valve.

The inlet valve for gas and air is also automatic; its seat is of the usual conical kind but somewhat broad. A gutter runs round the centre, having small holes bored through to a recess behind, which communicates with the gas supply pipe. The suction lifts the valve to a certain height, and, as the gases enter, the air flows past the holes and becomes thoroughly impregnated with gas, the extent being determined by the number of holes and the proportion of their area to the total area of the valve opening. The upper valve is made heavy to withstand the maximum pressure of the explosion; both valves are arranged so that the guide forms

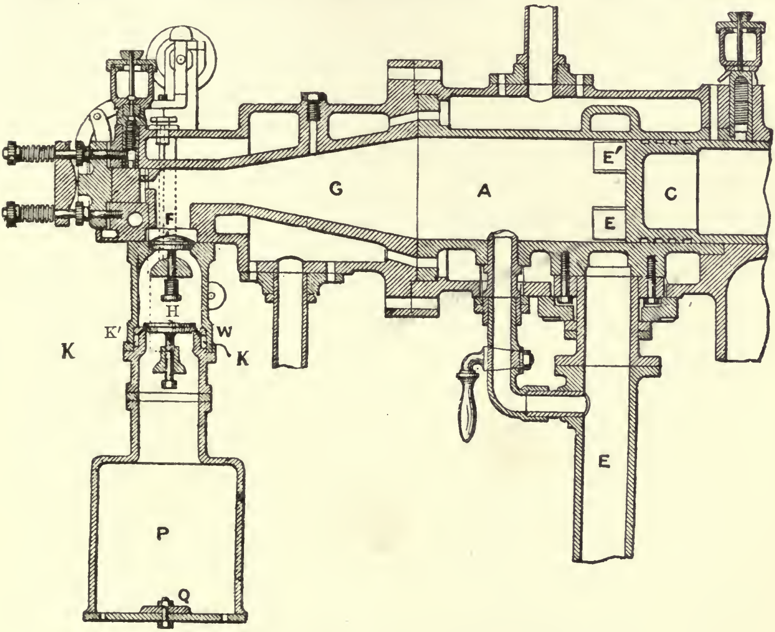

FIG. 57.—Longitudinal Section of Clerk Gas Engine.

a piston working in an air cylinder, so arranged as to check the fall of the valve before touching the seat, and so prevent any disagreeable rattle.

Description of the Drawings.—Fig. 56 is a general view of the engine. Fig. 57 a longitudinal section. Fig. 58 a sectional plan. In these drawings all the essential parts of the engine are represented; the sectional plan (fig. 58) shows the two cylinders, motor A and displacer B, in which work the pistons C and D suitably connected to cranks not shown in the drawing, but on a common crank shaft. The motor crank is double and of great strength; the displacer crank pin is fixed into an arm in the flywheel, and in the direction of motion of the engine is a half right angle or quarter circle in advance. The motor piston is shown at its extreme out-stroke, having passed over the exhaust ports E E^1, the piston thus serving as its own exhaust valve, and dispensing with any other, as shown; the displacer piston has moved half in and discharged a portion of the contents through the valve F (more distinctly seen in the other section, fig. 57) into the conical space G, which is so proportioned that the entering gases push before them the burned gases through the ports referred to, but without following them into these ports. By the continued movement, all the gases in B pass into A and the space G; the capacities of the two cylinders are so related that as much as possible of the burnt gases is discharged into the atmosphere, but without carrying away any of the fresh mixture containing unburned gas; this necessitates the mixture next the piston being somewhat more dilute than that next the inlet valve, but the commotion occasioned by compression so far equalises this undesirable state of things that at half in-stroke the mixture in its weakened portions is quite capable of inflammation by a light or the electric spark. The piston D having completed its in-stroke, C has passed over the discharge ports and compresses the contents of the cylinder into the space G; when full in and therefore completely compressed, the slide valve M has moved into such a position as to ignite the mixture; the maximum pressure being attained very rapidly and before the piston can move appreciably on its out-stroke, the piston is impelled forward under the pressure produced until it reaches the ports E E^1, when the contents are rapidly discharged, and the interior and

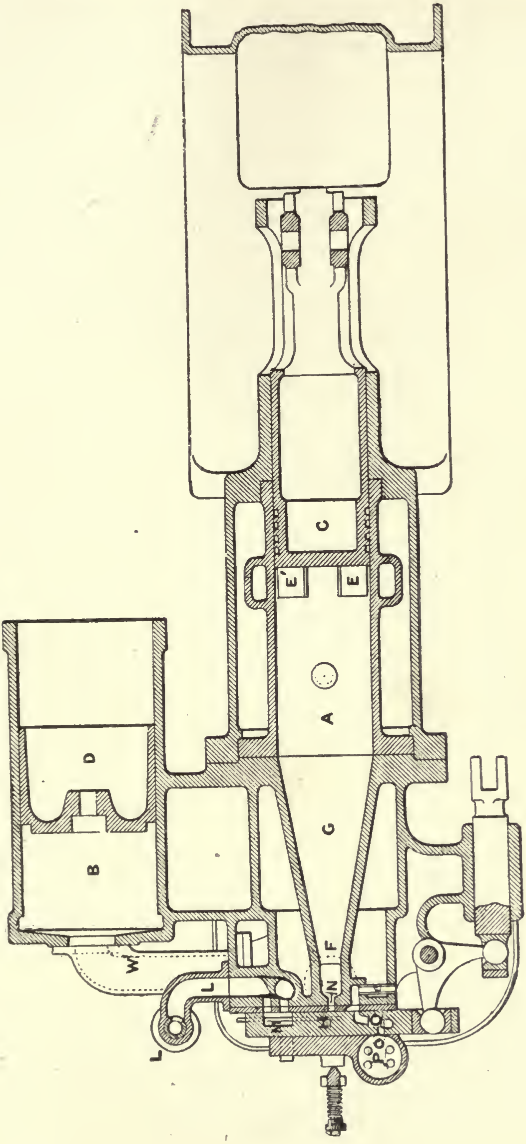

Fig. 58.—Sectional Plan of Clerk Gas Engine.

exterior pressures equalised. Meantime the piston D being in advance of the motor has moved to the end of its stroke and is beginning to return, it has charged the cylinder B with a mixture of gas and air from the automatic valve H (fig. 57), the communication being made by the pipe W (fig. 58). In the seat of this valve are bored a number of small holes passing into the annular space K K^1 (fig. 57), which communicates with the gas cock L (fig. 58) through the passage shown, in which is situated the lift-governing valve, not seen. Under the deficit of pressure caused by the movement of the displacing or charging piston, the valve is lifted and the exterior atmosphere rushes through, at the same time the gas passing through the holes mixes with it thoroughly, the proportion being determined by the relative areas of the holes and the space available for air by the lift of the valve.

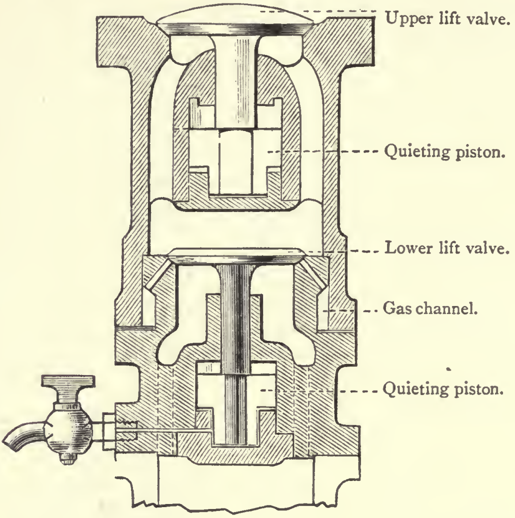

FIG. 59.—Section of Lift Valves. Clerk Engine.

The gases in B are under some slight compression before the complete discharge of A, but not sufficiently great to cause any material resistance; so soon as the pressure under the valve F is slightly in excess of that above it, then it lifts and the gases pass into G. The passage from the valve, which may be called the upper lift valve, is more clearly seen in fig. 57 : the igniting hole is shown at N, and communicates at the proper time with flame in the cavity O, which has been ignited at the exterior flame P, from a Bunsen burner (fig. 58).

The two automatic valves charging the displacer cylinder and discharging into the motor cylinder are provided with quieting pistons, cushioning the blow on the valve seat and preventing rattle ; they are similar to the dash pot contrivances used on Corliss' steam engines to check the snap of the steam valves, but, unlike them, are attached directly to the valve, instead of to the valve spindle and guide. The arrangement is very clearly seen at fig. 59 : the lower valve has no spring, it returns to its seat by its own weight ; but the upper valve requires to act more quickly and is pulled down by a spring.

The piston attached compresses the air before it, and the valve strikes its seat rapidly but without jar or recoil.

The igniting slide, M, is driven from an eccentric on the crank shaft through a bell crank and guide.

Diagrams and Gas Consumption.—The following tests give the latest results from the Clerk engine ; they are the usual trials

TESTS OF THE CLERK ENGINES OF VARIOUS POWERS.

	2 HP	4 HP	6 HP	8 HP	12 HP
Diameter of motor cylinder .	5 ins.	6 ins.	7 ins.	8 ins.	9 ins.
Stroke	8 ins.	10 ins.	12 ins.	16 ins.	20 ins.
Diameter of displacer cylinder .	6 ins.	7 ins.	7½ ins.	10 ins.	10 ins.
Stroke	9 ins.	11 ins.	12 ins.	13 ins.	20 ins.
Average revs. per min. during test	212	190	146	142	132
Average pressure (available) in motor cylinder in lbs. per sq. in.	43·2	63·9	53·2	60·3	64·8
Power indicated in motor cylinder	3·62	8·68	9·05	17·38	27·46
Power by dynamometer . .	2·70	5·63	7·23	13·69	23·21
Gas consumption in cb. ft. per IHP per hour	29·8	24·19	24·3	20·94	20·39
Gas consumption per brake HP hour	40·0	37·3	30·42	26·58	24·12
Max. pressure of explosion in lbs. per sq. in. above atmos. .	155 lbs.	236	195	195	238
Pressure of compression in lbs. per sq. in. above atmos. .	38 lbs.	55	48	49	57
Displacer resistance	0·40	0·80	0·86	1·50	2·00
Gas consumed per hour by each engine at speed without load .	40 cb. ft.	58 cb. ft.	57 cb. ft.	70 cb. ft.	90 cb. ft.

made by Messrs. L. Sterne and Co. on all engines before leaving the works, and therefore represent fairly the economy to be expected from these engines in ordinary work. They are from 2, 4, 6, 8, and 12 HP engines (nominal). The trials were made during 1885 at the Crown Iron Works, Glasgow, under the direction of Mr. G. H. Garrett.

Figs. 60, 61, 62 are fair samples of the diagrams taken during the tests. Figs. 63 and 64 are diagrams from the displacers showing the displacer resistance.

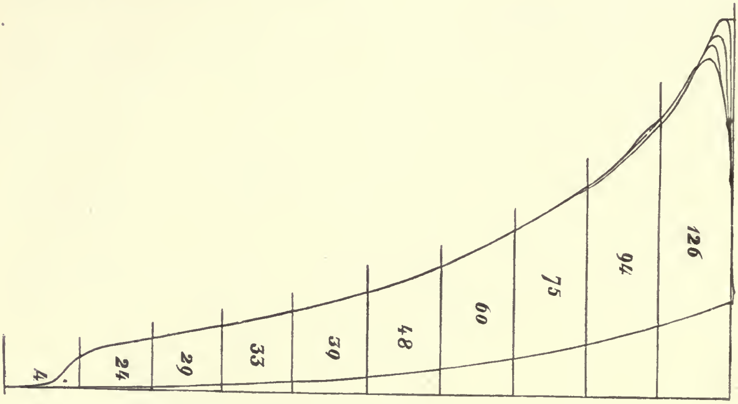

Nominal HP, 6; diam. of cylinder, 7″; length of stroke, 12″; No. of revs. 146; indicated HP, 9·05; consumpt. per IHP, 24·30 cb. ft.; consumpt. loose, 57 cb. ft.; brake HP, 7·23; consumpt. per BHP, 30·42 cb. ft.; mean pressure, 53·2 lbs.; max. pressure, 195 lbs.; press. before ignition, 48 lbs.; scale of spring, $\frac{1}{100}$″ per lb.

FIG. 60.—Diagram from Clerk Gas Engine, 6 HP.

Calculating from these diagrams the actual indicated efficiency it comes to 16 per cent. of the total heat given to the engine.

The compression space in the Clerk engines is as nearly as possible one-half of the volume swept by the piston from the exhaust port to the end of its stroke. The theoretic efficiency is therefore

$$E = 1 - \left(\frac{v_c}{v_o}\right)^{\gamma - 1} = 1 - \left(\frac{1}{3}\right)^{\cdot 408} = 0{\cdot}36.$$

The compression is higher, and therefore the theoretic efficiency of this engine is higher than the Otto, but the difficulties of proportioning the two cylinders of the Clerk engine cause a small loss of unburned gas at the exhaust ports, so that the actual efficiency is similar to that of Otto.

The mixture sent from the displacer cylinder into the motor and the space at the end of it, contains 8 vols. of air with 1 vol. of coal gas, but on passing through the upper lift valve and mixing to some extent with the exhaust there contained, it is somewhat diluted; the heat acquired by contact with the products of combustion and with the sides of the cylinder expands the entering gases, and a temperature of not less than 100° C. is attained before the compression commences. The result of this is, that the displacer gases, being expanded, expel more of the exhaust gases through the discharge ports than would appear from the volume swept by the displacer piston. This volume is equal to the volume swept by the motor piston, from closing of the exhaust ports to complete in-stroke. If no expansion and no mixing occurred, the exhaust gases contained in the compression space would remain in front of the cooler explosive charge; but the heat increases the volume at least one-third, so that the

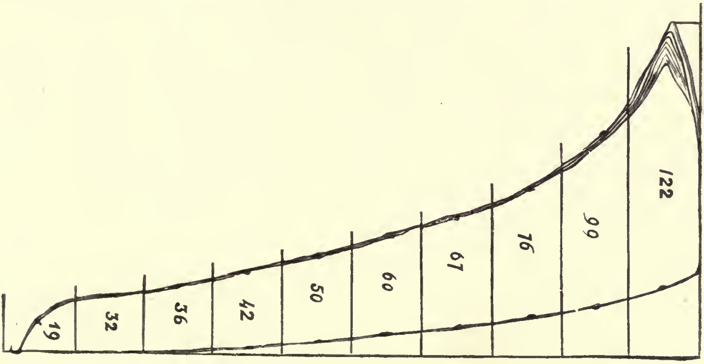

Nominal HP, 8; diam. of cylinder, 8″; length of stroke, 16″; No. of revs. 142; indicated HP, 17·38; consumpt. per IHP, 20·94 cb. ft.; consumpt. running light per hour, 70 cb. ft.; brake HP, 13·69; consumpt. per BHP, 26·58 cb. ft.; mean pressure, 60·3 lbs.; max. pressure, 195 lbs.; pressure before ignition, 49 lbs.; scale of spring, $\frac{1}{112}$″ per lb.

FIG. 61.—Diagram from Clerk Gas Engine, 8 HP.

volume occupied will be $1\frac{1}{3}$ times the volume swept by either piston. The volume of cylinder plus space is $1\frac{1}{2}$ vol. of cylinder,

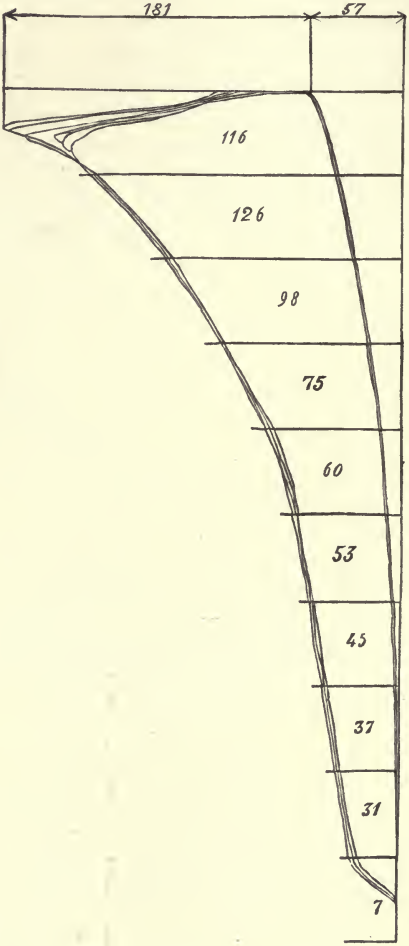

Nominal HP, 12; diam. of cylinder, 9″; length of stroke, 20″; No. of revs. 132; indicated HP, 27·46; consumpt. per IHP, 20·39 cb. ft.; consumpt. running light per hour, 90 cb. ft.; brake HP, 23·21; consumpt. per BHP, 24·12 cb. ft.; mean pressure, 64·8 lbs.; max. pressure, 238 lbs.; pressure before ignition, 57 lbs.; scale of spring, $\frac{1}{112}$″ per lb.

FIG. 62. — Diagram from Clerk Gas Engine, 12 HP.

so that the actual exhaust gases present are $\frac{1}{6}$ vol., or $\frac{1}{10}$ of the total gases present. But mixing must occur to a considerable extent and be made very complete on the return stroke during compression. The result of all this is the production of an explosive mixture which is explosive in every part of it, and of an average composition of one volume of coal gas in ten of the mixture. The proportion of burned gases present is very slight; the only reason why any should be left is the necessity of preventing any appreciable discharge of unburned gas at the exhaust ports. The mixture used is a comparatively rich one.

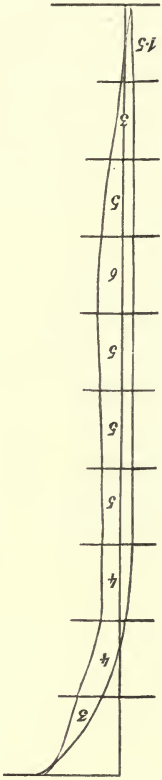

Scale of spring, $\frac{1}{32}''$ per lb.; mean pressure, 4·15 lbs.; IHP, ·860; diam. displacer cylinder, 7 ins.; stroke 12 ins.

FIG. 63.—Diagram from Displacer Cylinder (Clerk Engine), 6 HP.

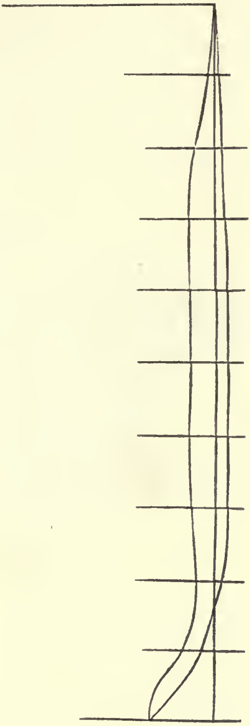

Scale, $\frac{1}{32}$ in. = 1 lb

FIG. 64.—Diagram from Displacer Cylinder (Clerk Engine), 8 HP.

Tangye Engine.—Messrs. Tangye, of Birmingham, have produced an engine in which compression of the kind common to the third type is used and an ignition is obtained for every revolution when at full power. It is Robson's patent and contains only one cylinder. All the necessary operations of charging, compressing, and igniting are fulfilled with one cylinder; it is arranged as in an ordinary steam engine. The front end of the cylinder unlike the Otto and Clerk engines is closed, a piston rod, cylinder cover, and stuffing box being provided, as in steam. The front end of the cylinder serves for charging, the back end for compression and explosion.

There is a compression space at the back end of the cylinder as in the other engines.

The action is as follows. During the return stroke, gas and air mixture is drawn into the front end of the cylinder at atmospheric pressure, through an automatic valve. The next out-stroke compresses the mixture into a large intermediate chamber at a pressure of not more than five lbs. per sq. in. above atmosphere. When full out and the exhaust ports therefore open, this pressure lifts a valve leading into the compression space of the engine, discharging before it the gases contained in the cylinder through the exhaust valve and filling the cylinder and space with explosive mixture. This reduces the pressure in the intermediate reservoir to atmosphere so that the next in-movement of the piston compresses the explosive mixture upon one side of the piston and takes in fresh mixture on the other side.

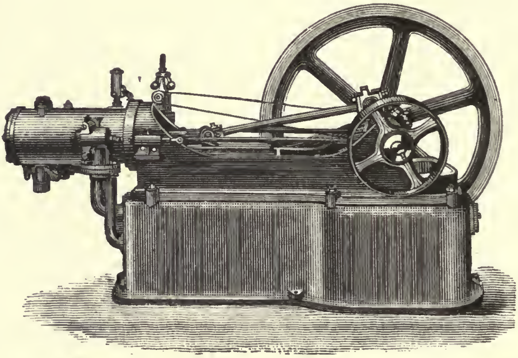

FIG. 65.—Robson's Gas Engine.

When compression is completed the igniting valve acts and the explosion impels the piston; so soon as the exhaust ports open, the pressure falls to atmosphere, and then the reservoir pressure being superior to that in the cylinder, the automatic valve acts and the fresh charge enters.

Thus an explosion is obtained at every revolution by using the front end of the cylinder as displacer and storing up the pressure in an intermediate reservoir.

The governing is managed by cutting off gas supply, but is hampered considerably by the intermediate chamber. Fig. 65 is an external view of the engine, which is exceedingly neat and of substantial workmanship.

The Stockport Engine.—This engine is similar to Robson's in theory but the front end of the cylinder is not used for charging, the piston being made a double trunk with the crank between, and one end and one cylinder being motor, the other end and the other cylinder being displacer. Compression occurs in the motor cylinder. Fig. 66 shows the external appearance. The valve arrangements differ from those of Messrs. Tangye. It is made by Messrs. Andrew, of Stockport.

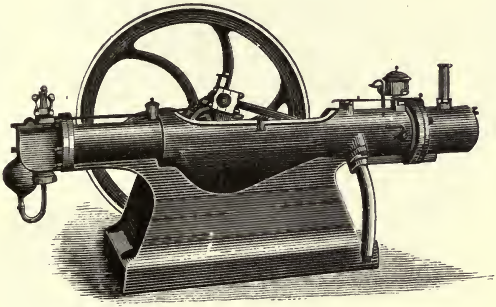

FIG. 66.—The Stockport Gas Engine.

Atkinson's Differential Engine.—The description of engines of this type would be incomplete without mention of this engine, exhibited at the Inventions Exhibition for the first time in 1885. It is exceedingly ingenious and quite novel.

Fig. 67 is an elevation, fig. 68 a section, and fig. 69 a plan. The action is very clearly seen from the different positions on fig. 70.

The same cylinder serves for all purposes of the cycle; two trunk pistons, working in opposite ends of it are connected to the levers and from thence to the crank shaft by the connecting rods. The short rods cause the necessary actions.

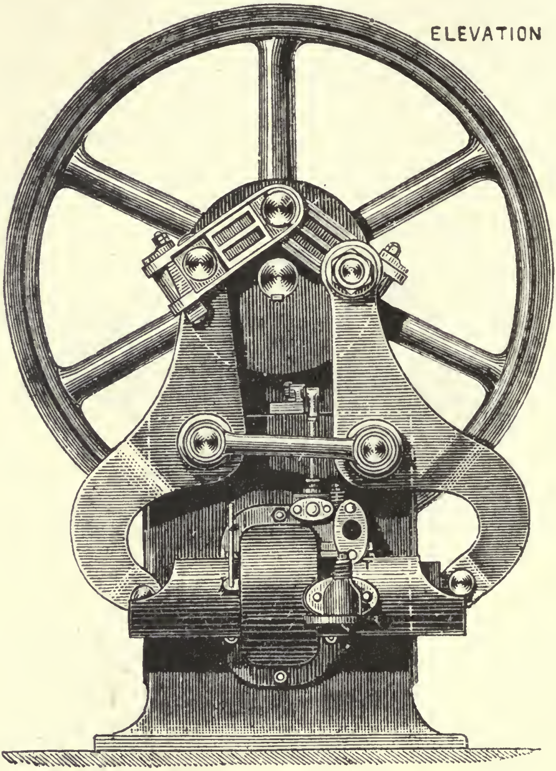

FIG. 67.—Atkinson's Differential Gas Engine.

In the first position, fig. 70, the pistons are at one extreme of their stroke, and are just beginning to separate. The charge of gas and air enters between them through the automatic lift valve, and in position 2, the charge has entered and the further movement of the piston is about to close the port leading to the admission and exhaust valves. The compression thus commences and in position 3 it is completed. The ignition occurs and the pistons now rapidly separate, the exhaust port being uncovered and the discharge commencing in position 4. By this clever method the whole operations of admission, discharge, ignition, and expansion are performed in the single cylinder with only two automatic

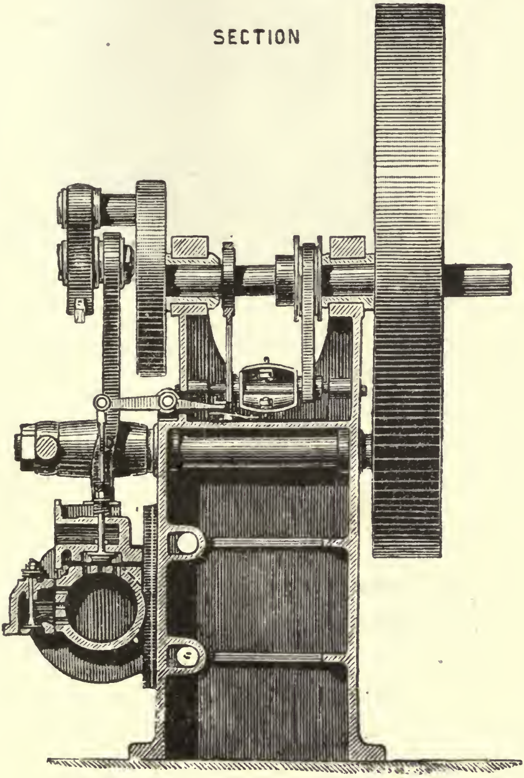

FIG. 68.—Atkinson's Differential Gas Engine.

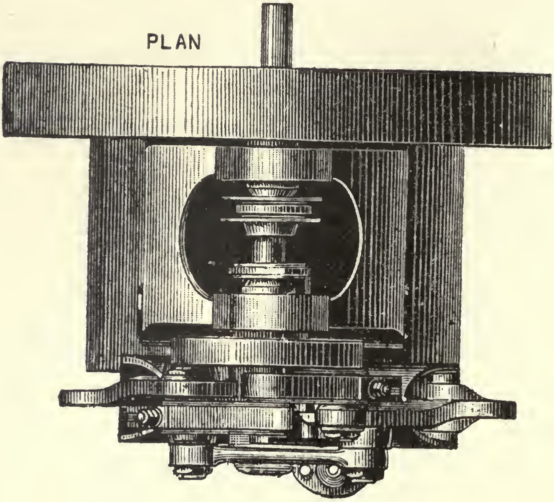

FIG. 69.—Atkinson's Differential Gas Engine.

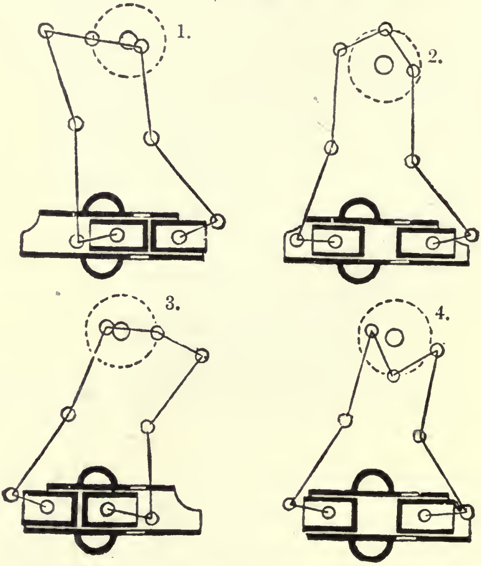

FIG. 70.—Atkinson's Differential Gas Engine.

valves which are never exposed to the pressure of explosion, the pistons acting in some part as valves and uncovering the exhaust and inlet ports when required. In the other extreme position they also act as valves, the outside piston uncovering the igniting port at the correct time. Sufficient experience has not yet been accumulated with this engine to speak positively as to its performance. To the author, the principal disadvantage appears to lie in a compression space of diameter so great, in proportion to depth, that the ratio of cooling surface to volume of hot gases is largely in excess of that common to other engines. This disadvantage will diminish the economy which the great expansion would otherwise give.

CHAPTER VIII.

IGNITING ARRANGEMENTS.

However perfect the theoretic cycle of an engine, or however admirable is its construction, in the absence of a good igniting valve the skill and energy expended is of no avail. The engine is a useless mass of metal requiring power to move itself rather than furnishing power to set other machines in motion.

In the earlier stages of gas engine manufacture, the igniting method has been the most fruitful source of annoyance and difficulty; even yet, after many years of engineering experience, the igniting valve is still the initial difficulty which the inventor must overcome before he gets the opportunity of testing his theories of heat and work in a moving machine. Quite a number of witnesses, in the shape of unworkable gas engines, in many engineers' workshops throughout Britain, attest silently but emphatically the difficulties of the igniting valve.

The problem is by no means a simple one, and the care lavished upon its solution would not be suspected on inspection of the igniting gear of any good modern engine. Much has been done, but much still remains yet to be accomplished before flame is as completely and effectively under control as steam.

In the noncompression engines the problem is comparatively simple—to inflame a volume of explosive mixture enclosed in a cylinder, so that the explosion is confined within the cylinder, and no communication is open to atmosphere. This is to be repeated regularly and with certainty at rates varying from 60 to 150 times per minute, depending upon the speed of the engine. In the earlier trials, what may be called the touch hole method naturally suggested itself; the piston after taking in its charge, crossed a small hole and sucked a flame through it into the cylinder, the hole being either small enough to occasion no substantial loss of pressure upon explosion, or covered by a small valve closing with the pressure from the interior. This is the earliest flame method. Then comes the idea of using the electric spark, and so completely closing up the cylinder, and, later on, a return to flame, using a double flame, one to ignite an intermediate one, and the intermediate flame carried in a pocket or hollow cock to the mixture. Then the idea of spongy platinum suggested by the well-known Doebereiner's Hydrogen lamp. Later on the heating of metal tubes or metal masses and the ignition of the gases by contact with them. Then electrical ignition again, but this time by heating a platinum wire to incandescence. All those methods were proposed and to some extent practised long before gas engines appeared in any commercially successful form.

Ignition methods may be classed in four distinct groups.

(1) Electrical methods.
(2) Flame methods.
(3) Incandescence methods.
(4) Methods depending on 'Catalytic' or chemical action.

(1) ELECTRICAL METHODS.

Spark Method.—The use of the electric form of energy seems at first sight a very convenient and easy method of getting an intense heat at any desired time and in any desired spot in the interior of a cylinder. The electric spark has long been used by chemists to explode the contents of the eudiometer in which gas analysis is effected; and the platinum wire rendered incandescent by the current from a battery has long been familiar to experimenters and is used by them for many purposes. The spark method was used in the Lenoir engine. A Bunsen's battery, a Rumkorff induction coil, and a commutator or distributor, is required in addition to the insulated points between which the spark passes in the interior of the cylinder.

Fig. 71 is drawn to show clearly the general arrangement. The Bunsen's battery A generates the current, which passes by the wires to the coil B, from which the intensity current passes to the insulated points D D by way of the distributor C. The negative pole of the coil is permanently connected to any part of the metal work of the engine; the igniting points D, D, consist of porcelain plugs seen on a larger scale at E. The porcelain is firmly cemented into the brass nut 1, and the wire 2 which passes through a hole in the plug terminates outside in the connecting screw 3, and inside is bent over the end of the plug; the other wire 4, passes through another hole in the plug, is bent over in the inside lying near the wire 2 but not touching it, it then passes through the side of the plug touching the metal of the nut. When the nut is screwed into position the one wire is in metallic connection with the cylinder of the engine, and the other is insulated from it.

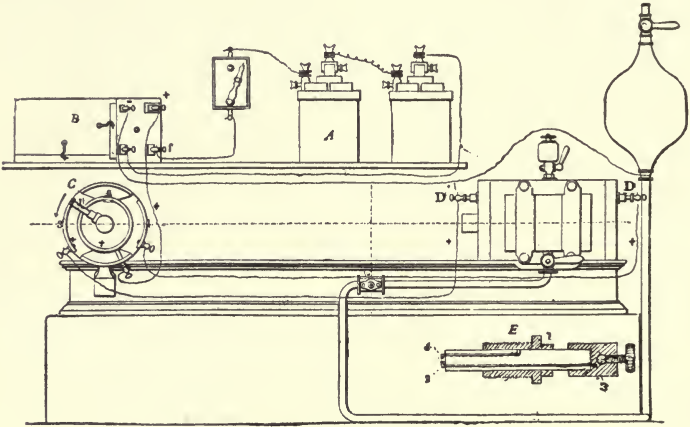

FIG. 71.—Ignition Arrangements Lenoir Engine.

The distributor C consists of an insulated metallic arm 1 rotating on the end of the crank shaft over the insulated ring 2, which is connected to the positive pole of the coil. Two insulated segments 3, 4, are connected by wires to the igniting plugs D, D; in rotating, the arm 1 comes alternately over 3, 4, and it is within sparking distance of the ring 2 as well as the segments; the sparks pass alternately to the segments and thence alternately to the opposite ends of the cylinder. The ebonite disc carrying the segments and ring is so adjusted that the spark begins to pass at either end, just as the admission valve closes. If it passed too soon the explosion would occur before the admission valve closed, and therefore would partly be lost, and at the same time would make a disagreeable noise. If it is passed too late, power is lost, because the piston is at its most rapid rate of movement and is reducing the pressure of the cylinder contents uselessly.

Notwithstanding the most careful adjustment, some time elapses between the closing of the admission valve and the explosion. When all is in good order this arrangement works very well, but should the insulation be disturbed and any short circuiting occur, the spark fails to pass between the points in the interior of the cylinder and a missed or late ignition results. This often happens in starting the engine when it is cold; the first few explosions cause a condensation of water upon the points and the spark then fails, the current passing through the water film from wire to wire without spark. The igniters then require to be uncoupled and dried. To reduce this trouble, the points are kept towards the top of the cylinder in the end covers so that any water or oil drainage may flow down and leave them dry. The difficulties of insulation, coil and battery, are so great that they did much to prevent the use of the Lenoir engine ; unless the machine fell into intelligent hands it was sure to go wrong and give trouble.

The spark method has never been applied to compression engines as the compression increases all difficulties. The Lenoir igniting plug, or 'inflamer' as it was called, if put in a compression engine leaks badly and cannot be got to act efficiently. Many specifications of compression and other engines state that ignition is accomplished by the electrical spark, but the Lenoir engine alone attained any success.

Incandescent Wire Method.—This method very naturally suggests itself as a solution of the difficulties of the high tension spark; the coil is dispensed with and the current from the battery is applied directly to heat a thin platinum wire. The difficulty of insulating is very slight. The tension being low it is a matter of indifference whether the insulating material is wetted or not. The wire being constantly at a red heat cannot remain at all times in the cylinder, but is put into communication with it at proper times by means of a slide valve. Fig. 72 is a drawing of an igniting slide of this kind, as used by the author in experimental work. It acts very well indeed. The screw 1 carries the insulated rod 2, insulated by means of asbestos card-board packed into the space and screwed down firmly by the screw 3. The other wire is screwed into the metal and so is in metallic connection with the metal work of the engine. One wire from the battery connects to any portion of the engine; the other is insulated. The platinum wire 4 is thus kept continually at a red heat, and the slide 5 moving at proper times causes the gases to be ignited to flow into the chamber containing the platinum spiral, by the hole 6, and so causes the explosion.

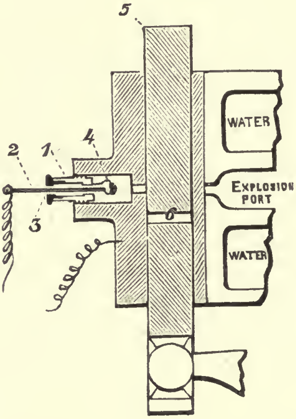

FIG. 72.—Electrical Igniting Valve (Clerk). Incandescent Platinum Wire.

There is only one precaution required in using this. The battery must not be too powerful; if the wire is heated by it to near its fusing point, then the further heat supplied by successive explosions may cause its destruction. It requires to be kept at a good red heat and no more when open to the air: when closed up and in contact with the hot gases it will then become almost white hot; anything above this may fuse it. The battery is of course at all times a source of care; as it requires to be often renewed, it is only for experimental work that this arrangement answers well. In the hands of the general public it would come to grief. Hugon and many others proposed similar arrangements, but they do not appear to have worked them out.

Arc Method.—There is another electrical method. A small dynamo attached to the engine keeps up a continuous current and heavy platinum points in communication with the cylinder carry the arc. This is difficult, however, as the points constantly volatilize and require frequent renewal. This method has never come into practical use; it is described several times in specifications.

(2) FLAME METHODS.

The earliest really efficient igniting valve is that described by Barnett in his specification of 1838. It is the parent form of the most extensively used valve, the 'Otto.'

Barnett's Igniting Valve.—Fig. 73 shows a vertical section and a plan of this valve. It consists of a conical stopcock with a hollow plug; the shell contains two ports, 1 and 2—1 open to the atmosphere and 2 communicating with the cylinder. The plug of the cock has one port, 3, so arranged that it may open on the atmosphere port or the cylinder port in the shell, but cover enough being left to prevent it opening to both at the same time. In turning round it closes on the atmosphere before opening to the cylinder.

A gas jet burns at the bottom of the shell, and in the hollow of the plug, the ports 3 and 1 being long enough and wide enough to allow the air free circulation as shown by the arrows. The flame must not be too large or it will fill the whole interior with gas and prevent air getting in; the flame will then burn at the port 1 in the air and will not enter the cock. Suppose it to be burning regularly in the cock as shown in the drawing, then if the plug is suddenly turned round so that port 3 closes upon the atmosphere port 1, and opens upon the cylinder port 2, the air supply will be sufficient to keep the flame living till the mixture contained in 2 reaches it. The explosion then occurs. The port 2 is of the same shape as 1, so that the flame causes the gases to circulate the same as the air did when open to it; the mixture comes in contact with the flame by circulating through the plug. If the port 2 is made so small that no circulation occurs, then the ignition will be a very uncertain matter; as the gases will require to get at the flame by diffusion, which is a slow process, and the flame may be extinguished before they arrive at it. The explosion of course extinguishes the flame, but when the plug is again rotated to open to the air, the external flame relights it and it is ready for another ignition.

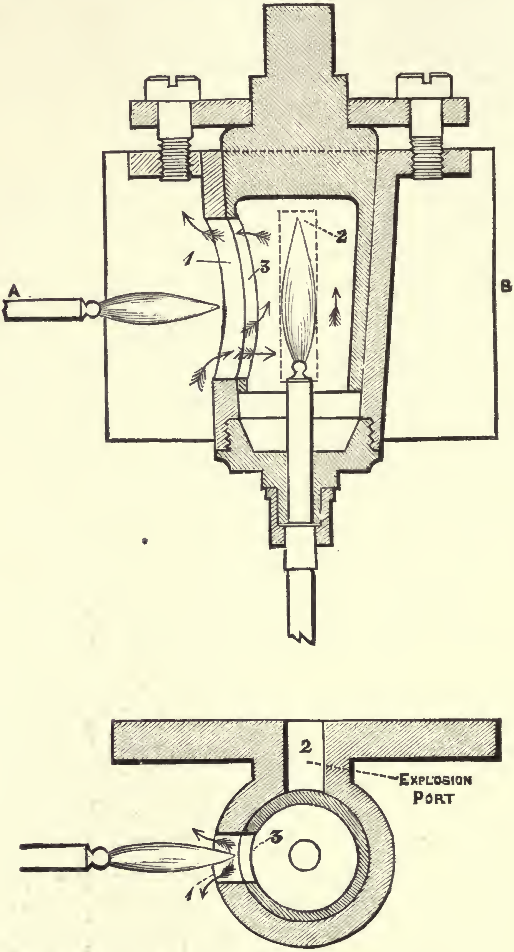

FIG. 73.—Barnett's Igniting Valve (flame).

Hugon's Igniting Valve.—In the small Hugon engine Barnett's method was first applied in a fairly successful manner.

The valve is shown in section at fig. 74.

The sectional plan, fig. 74, shows the internal flame lit and burning in the ignition port 1; the external flame 2 burns close to it in this position, so as to be ready to light it when wanted. The gas for the internal flame is supplied under higher pressure than that of the ordinary gas mains by a bellows pump and small reservoir through the flexible rubber pipe. For the external flame the gas is used at the ordinary pressure.

When ignition is required, the valve moves rapidly forward causing the port 1 to close to atmosphere first, and then to open to the cylinder port 3, as shown at the other end of the slide.

The explosive mixture which fills the port 3 is at once ignited and the flame finds its way from the port into the cylinder itself; the port is necessarily filled with pure explosive mixture free from any admixture with exhaust gases, as all the mixture before entering the cylinder must pass through it and so sweep before it any burned gases into the cylinder. Hence the mixture in the port will be more ignitable than that in the cylinder, as the mixture there is diluted in part with exhaust gases while that in the port is free from them.

The explosion is thus exceedingly certain and regular; when it occurs it extinguishes the internal flame and at the same time its superior pressure forces back the gas in the rubber pipe while the port 1 remains open to the cylinder.

The return of the slide again opens it to the atmosphere, and here is seen the necessity of using the gas under some pressure. Before it can relight at the external flame, the products of combustion must be expelled from the gas pipe; if the gas were under only the ordinary gas main pressure there would be no time for this, and the valve would return to ignite without a flame. The expedient of increasing pressure is somewhat clumsy but it acts fairly well. The port 1 is made large to give space for the air necessary to support the flame while the ignition port is passing from atmosphere to cylinder port. At the moment of explosion, the cylinder is completely closed from the air.

The explosion is therefore completely contained within the cylinder and no sound is heard.

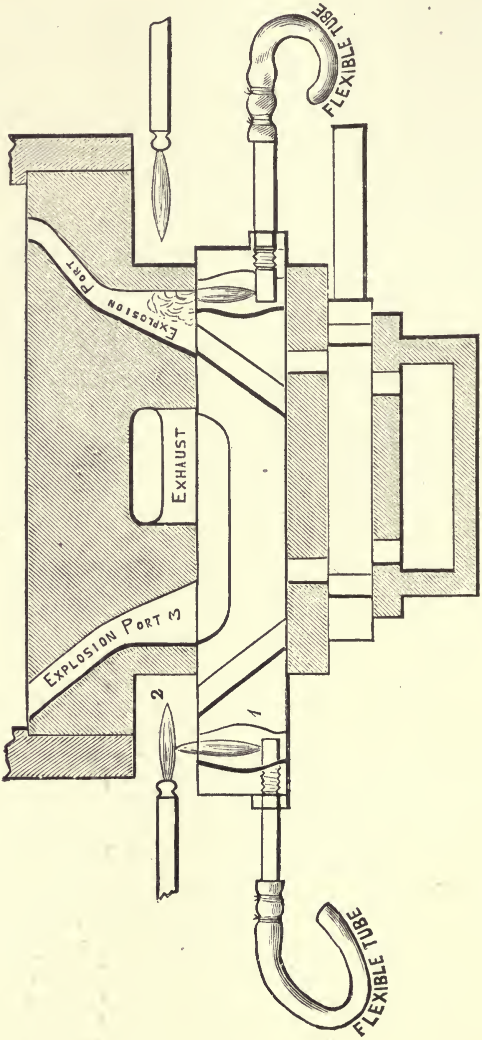

Fig. 74.—Hugon Flame Igniting Valve.

In the engine at the Patent Office Museum Mr. S. Ford considerably improved the igniting arrangement by intercepting the rush back to the gas pipe by a light check valve ; he was thus able to use gas under the ordinary gas main's pressure and dispense entirely with Hugon's gas pump and reservoir. The explosion, instead of forcing a considerable volume of burned gases down the gas pipe, simply closed the check valve, which opened as soon as the igniting port reached the air again, and so gave the gas stream at once.

Otto's Igniting Valve.—The igniting valve used in the Otto and Langen engines is a further development of Barnett and Hugon's igniting devices.

As applied to the compression engine there is one alteration, very slight, but very essential.

In the Lenoir and Hugon engines, as well as the Otto and Langen, the pressure in the cylinder is the same, or in some cases less than that of the external atmosphere, that is, before ignition. It is therefore an easier matter to transfer a flame burning quietly in the air to the cylinder without danger of extinction. When the gases to which the flame is to be transferred exist at a pressure some 40 to 50 lbs. per square inch superior to that of the flame itself, it is not so easily seen how the flame is to be transferred without extinction. Generally described the arrangement is as follows. A small quantity of coal gas is introduced into the upper part of a cavity in the ignition slide ; being lighter than air it remains separate from it and has no tendency to mix with the air beneath it, except by the slow process of gaseous diffusion. At the surface of contact with the air, it is ignited and burns with a blue flickering flame. The movement of the slide cuts off communication with the outer atmosphere, and very shortly thereafter opens on the admission port of the engine, but before doing this it opens on a small hole communicating with the cylinder. This hole communicates with the gas passage in the upper part of the slide, so that the gases under pressure enter and force the gas downwards, the pressure rising in the port more slowly than would occur if the main port opened at once. The pressure is therefore nearly level with that in the cylinder when the main port opens, and the flame still burning at the point or surface of junction between the gas and air, ignites the mixture. If the pressure was not raised in the igniting port by pressing the gas downwards and thereby avoiding a rush past the flame portion, the rush would often extinguish the flame and an ignition would be missed. The apparent difficulty of transferring the flame from atmosphere to 40 lbs. above it is thus simply and beautifully overcome. By using a portion of gas in the upper part of the valve cavity, the difficulty of the blow back of explosion down the gas supply pipe is also overcome, as the gas supply can be cut off before the explosion or

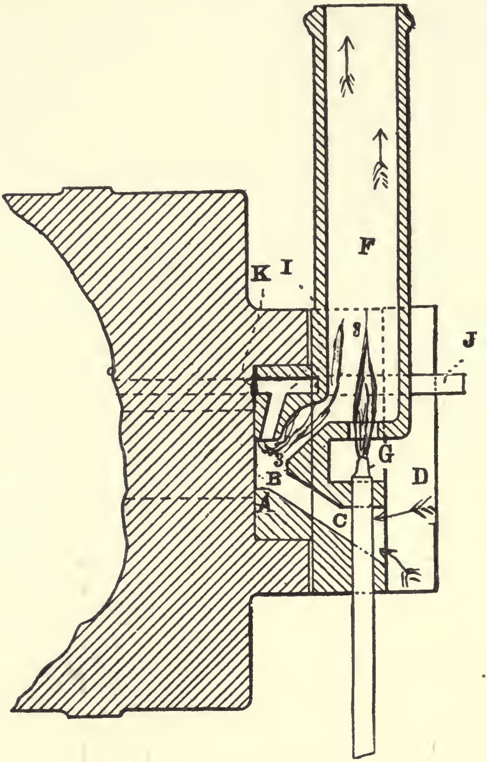

FIG. 75.—Section, Otto Igniting Valve.

compression pressure comes on. It is cut off just before the valve closes the flame port to atmosphere.

Fig. 75 is a vertical section showing the flame cavity in the slide, in the act of introducing coal gas at the upper part and inflaming it at the point of junction, between gas and air.

The slide A contains a forked passage B communicating at the lower passage with the air inlet C, and at the upper passage with the funnel F, which are both in the valve cover D, which holds the valve against the engine face. The jet C has a flame constantly burning into the funnel, which becomes heated, with the effect of drawing a current of air through the forked passage when its ports are in proper position ; the direction of the current is shown by the arrows. The pipe J supplies coal gas which passes along the gutter I, cut in the cover and valve faces, into the forked passage C, and thence to the funnel F where it is inflamed and burns as shown. When the movement of the slide cuts off communication with the atmosphere, it also closes the gutter I and terminates the supply of coal gas from the pipe J, but the upper part of the forked passage contains gas ; a flame therefore flickers as shown. Just before B opens on the port L, fig. 76, the hole K, fig. 75, opens and the pressure from the explosion space causes a flow into B, forcing before it the gas contained in the hole, thereby intensifying the flame by making the gas pass more into the air and bringing about the equilibrium of the pressures. When B opens on L, the flame is a vigorous one, and at once fires the whole charge in the explosion chamber. Fig. 76 shows the slide with the port B at the moment of opening on L. Fig. 77 is an end elevation of the valve and cover, showing the ports and gutters dotted and lettered, position same as in fig. 76. The method is carried out completely and is a very perfect one indeed ; it is somewhat slow in action, depending as it does on a proper ventilation of the forked passage and the complete replacement of the burned products by fresh air before the gas can burn properly in the cavity. If the engine be run more rapidly than the draught of the funnel can clear out the passage from the burned gases, then the flame cannot be lit in it and an ignition will be missed.

It is a method exceedingly successful when ignition is not required too frequently, but very troublesome and uncertain for rapid ignition. The Otto and Langen engine only made 30 ignitions per minute, and the Otto compression engine makes but 80

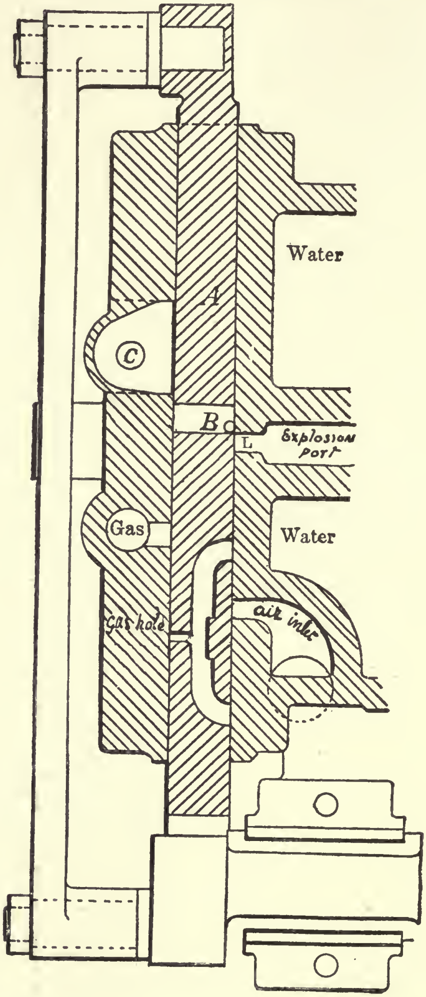

FIG. 76.—Sectional Plan, Otto Igniting Valve.

ignitions per minute at full power ; its efficiency is good at these rates, but at 150 per minute it is too slow in action.

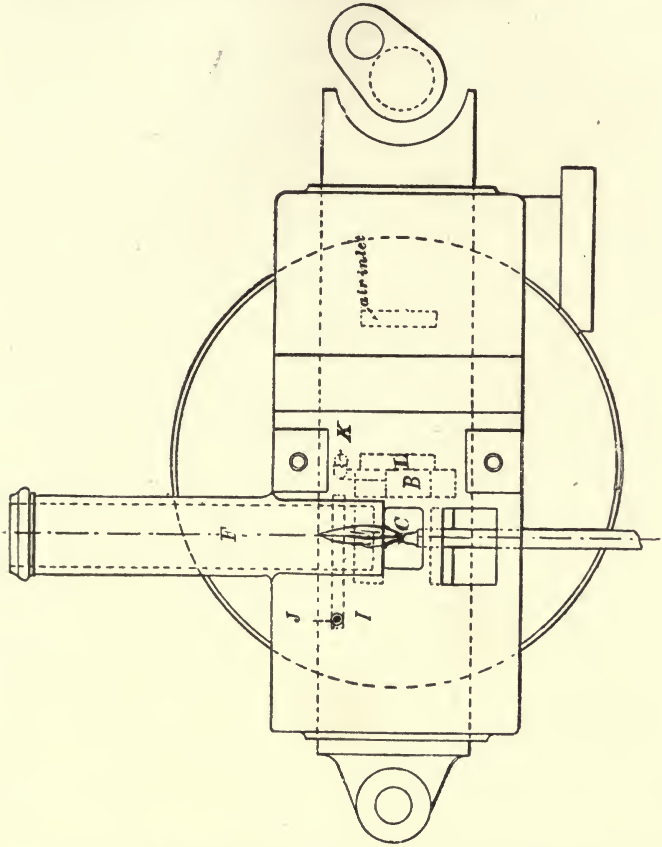

FIG. 77.—End Elevation, Otto Igniting Valve.

Clerk's Igniting Valve.—The method of igniting the charge used by Clerk is quite different from the other flame methods already described ; the difference is necessitated by the greater rapidity of ignition in engines with an impulse for every revolution.

To ventilate the igniting port in the Otto and Hugon slides requires time, which cannot be given when the frequency of the ignition approaches 150 to 200 per minute.

To meet this difficulty the author has invented several methods both flame and incandescence, but the one to be described is that at present in use in his engines ; it is very reliable and rapid, as many as 300 ignitions per minute having been made with it experimentally, or at the rate of 5 ignitions per second.

A portion of the explosive charge is allowed to pass from the motor cylinder through a regulated passage to a grating placed at the end of a cavity in the slide, and is there ignited by a Bunsen flame ; the grating prevents the passage back of the flame, and the mixture burns in the cavity without requiring the presence of the external atmosphere. At each end of the cavity there is a port opening to opposite sides of the valve, the one for lighting the gases streaming from the grating, the other for communicating with the interior of the cylinder at the proper time. The communication with the cylinder is not made until the outer port cuts off from atmosphere, and the flow of the gases is so regulated that while this is being done, the flame still continues to be fed by fresh supplies. It is evident that if too great a current be sent in, the pressure will soon become equal to that in the cylinder, and then the flow towards the cavity will cease and the flame become extinguished ; this is guarded against by proper proportioning of the flow by the check pin. The pressure in the cavity when its port opens on the cylinder port is still slightly less than that in the cylinder, and the gases from the cylinder enter and are ignited. By using gas and air already mixed in proper proportion, the necessity of ventilating is removed, and it is made possible to ignite at the rate required by the system of impulse at every revolution. Without this it would be almost impossible to get a passage cleared out in time to allow of so frequent ignition, by a coal gas flame burning simply in air. It was first used by Clerk in an engine working in February 1878, and has subsequently been used by Wittig and Hees and by Robinson in the Tangye engine. In the form here described it was first used by Clerk in November 1880.

Fig. 78 is a sectional plan of the igniting slide and cover as well as the passage into the combustion space. The valve 1 contains the cavity 2, furnished at the ends with the ports 3 and 4 ; at the end 3 is placed the grating 5, communicating behind with the explosion port 6, by a small hole 7 and a gutter in the valve face, showing at fig. 78. A long pin 8 screwed into the end of the slide controls the gases entering the space behind the grating, and if need be can cut off communication altogether. When the valve is in the position shown in the drawing, the mixture is beginning to flow through the grating into the space 2, and is ignited by the Bunsen flame 9 lying up against the valve face. The Bunsen flame lies so close to the grating that immediately inflammable mixture comes, it is lighted before it can

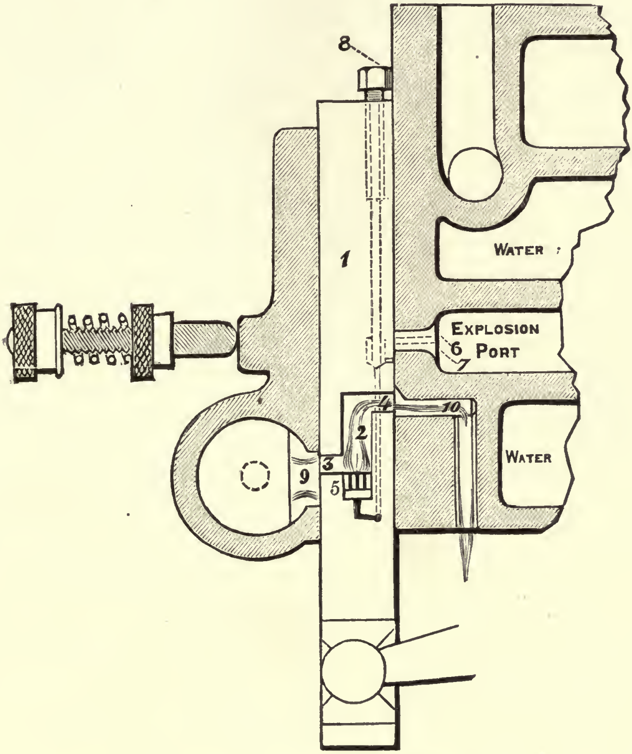

Valve in position of flame lighting at external flame.

FIG. 78.—Sectional Plan, Clerk Igniting Valve.

get time to fill the cavity ; if allowed to accumulate in the cavity before lighting, a slight explosion ensues and a disagreeable report is produced. The flame at the grating burns in the cavity, discharging into the passage 10, and from thence to the atmosphere. The movement of the slide cuts off communication with the atmosphere, first on the Bunsen flame side, and then on the inside of the valve ; very shortly after, the port 4 opens on the port 6 leading to the cylinder, and the gases then taking fire communicate the flame to the whole contents of the compression space. In fig. 79 the flame port in the valve is full open on the explosion port of the engine. The slide then moves past the port and back

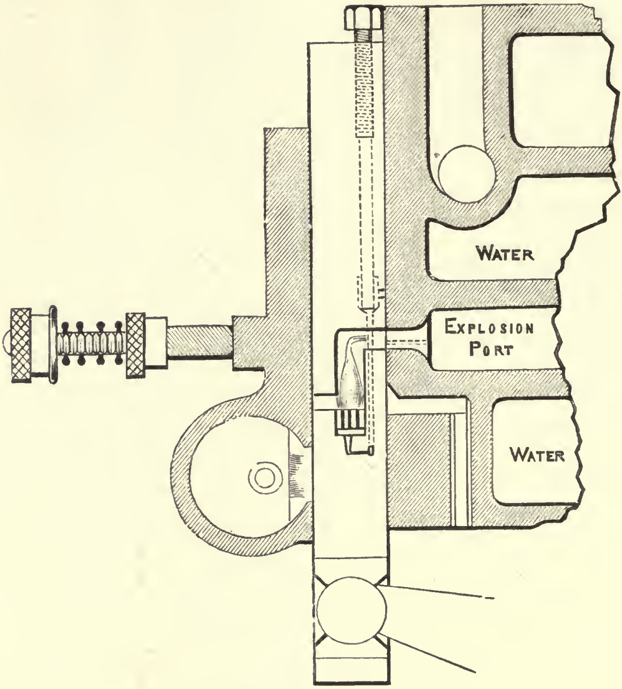

Internal flame exploding mixture.

FIG. 79.—Sectional Plan, Clerk Igniting Valve.

to the first position, where the operations described are repeated and igniting again occurs.

This arrangement is very rapid in action, and is capable of igniting with the utmost regularity at a rate so high as 300 times per minute, which is far in excess of the requirements of the engine. Fig. 80 shows the Bunsen flame burning against the face of the valve, ready to ignite the gaseous mixture.

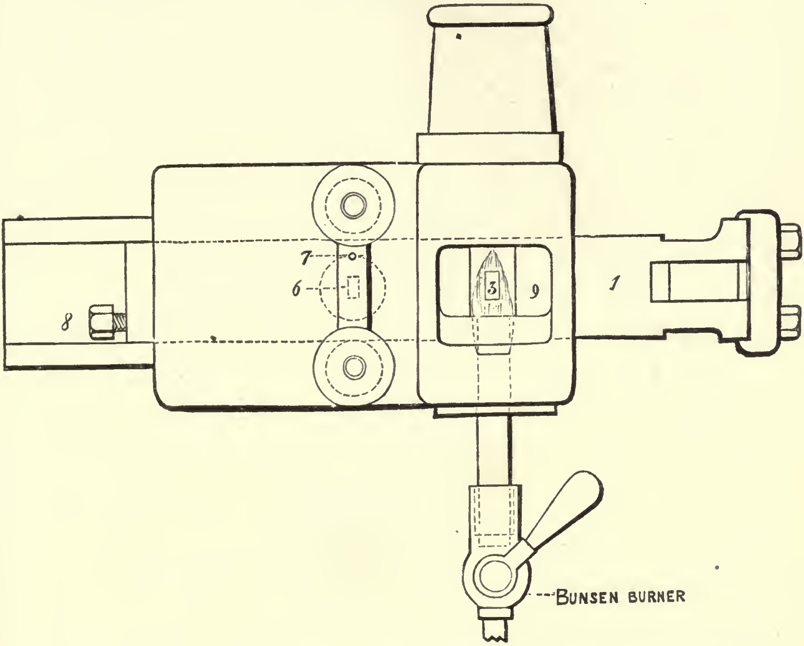

FIG. 80.—End Elevation, Clerk Igniting Valve.

Brayton's Flame Ignition.—The Brayton method of ignition has already been described shortly in the description of the engine. It is so beautiful and instructive that it merits further discussion.

The action will be made clearer by describing a well-known laboratory experiment (fig. 81).

A piece of wire gauze, *a*, held a few inches from the Bunsen lamp, *b*, the gas being turned on, will prevent the flame when lit above it from passing back through the gauze to the burner. The gauze may be moved through a considerable distance from the Bunsen tube without extinguishing the flame. The mixture of gas and air streaming from the Bunsen passes through the gauze, and, although igniting above, the heat is so rapidly conducted away by the gauze, that the flame cannot pass through its interstices back to the lower side. If an explosive mixture be confined under say 30 lbs. per square inch pressure in a vessel, and a pipe from it (fig. 82) leads to a pair of perforated plates with gauze between them, *a*, then the cock *b* being opened gently (the valve *c* being previously open), the mixture will stream through the plates into the atmosphere, and, if ignited, will burn at *a* without passing back. If the cock *b* is opened suddenly a greater rush of flame will occur, diminishing again if it is partly closed.

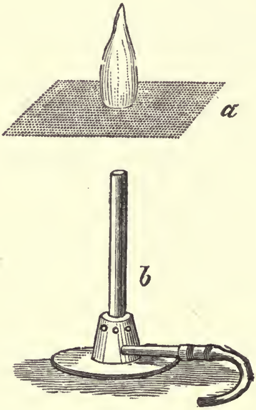

FIG. 81.—Bunsen Flame burning above Gauze.

So long as enough mixture passes to preserve alive the flame at *a*, then any increased quantity passing from the reservoir will be burned; the little flame increasing or diminishing as the opening of the stop-cock valve is increased or diminished.

The action of the ignition in the Brayton engine is exactly similar. The pressure on the flame side of the grating is slightly below that existing on the other side; the stream of cold gases entering the engine cylinder immediately becomes flame on the grating, and so expands, the volume of flame being changed as required by the valve action of the engine.

This method is most successfully carried out in the Brayton engine. The lack of economy is not due to the ignition, but to the use of it under unsuitable circumstances. Without doubt this system, in a better combination, will come largely into use in future and larger gas engines. It is unsuited for cold cylinder explosion engines, but admirably adapted for hot cylinder combustion engines of the second type.

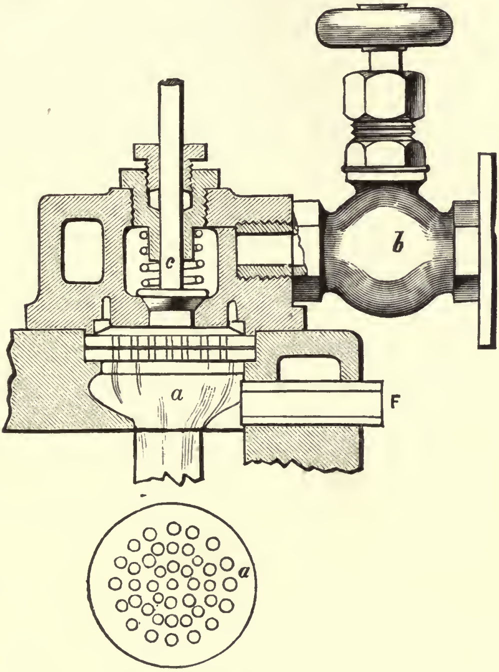

Plan of grating.

FIG. 82.—Brayton Grating and Valve.

(3) INCANDESCENCE METHODS.

The ignition of explosive mixtures by contact with heated metallic surfaces has often been proposed, first by the late Sir C. W. Siemens, and after him by the American, Drake. Dr. Siemens, in one of his gas engine patents, proposes to ignite the mixture by passing it through an iron tube, which is heated to redness by a flame outside of it.

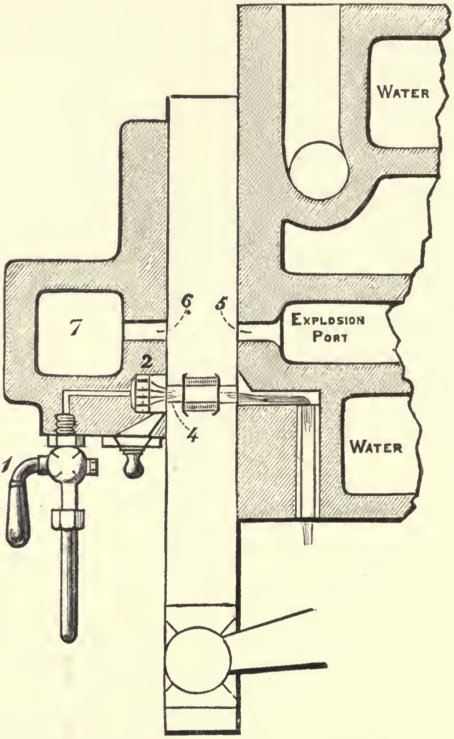

FIG. 83.—Sectional Plan, Clerk Incandescent Platinum Igniting Valve.

Drake constructed an engine in which the ignition was effected in a similar manner. The difficulty is found in the rapid oxidation of the tube, and the consequent necessity for frequent renewal. Frequent attempts have also been made to heat a portion of the interior surface of the cylinder, so that at a suitable time the mixture might be exposed to it and fired.

The first arrangement of incandescent ignition successfully applied to a compression engine is the invention of the author, and is described in his patent, No. 3045, 1878. It was used in an engine exhibited at the Royal Agricultural Society's Show, Kilburn, in 1879 (July).

Clerk's Igniting Valve.—Fig. 83 is a sectional plan of this valve in position. Fig. 84 is a separate view of the valve looking upon the face, and fig. 85 is the platinum cage, full size, taken out of the valve.

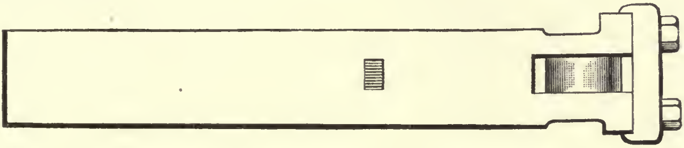

FIG. 84.—Face of Valve with Platinum Cage.

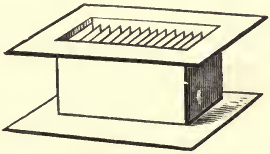

FIG. 85.—Platinum Cage.

The platinum cage consists of a box of platinum plate, with numerous platinum ribs running across it. They are secured by rivets running completely through, small platinum washers serving to keep the plates at equal distances. The valve receives this cage in a cavity, and it is tightly packed in its place with asbestos and slate packing, a covering plate screwed down upon it securing the whole in position. To start the engine, the reservoir containing gas and air under pressure is opened; the small tap, 1, then opened allows mixture to flow through the diaphragm 2 (made like the Brayton grating), and the mixture is ignited at the small door 3, which is then closed. The flame flows through the platinum cage, heating up its plates to a white heat in a few seconds. On opening the starting cock of the engine, it moves, and brings the igniting port 4, on the cylinder port 5, at the same time opening on the port 6, in the cover, leading into the cavity 7. The mixture in the cylinder then rushes through the cage, becoming ignited, and the explosion reaches the cylinder; the cavity 7 is so proportioned that each ignition sends a measured quantity of flame through the cage into it; the heat of the explosion at every turn therefore supplies heat to the platinum. This added heat is sufficient to keep it at a white heat. So long as the engine is supplied with gas it gets an ignition at every revolution, and a portion of that heat goes to the platinum to make up for loss by conduction. The heating flame used in starting the engine is dispensed with immediately on starting, and the engine runs continuously without outside flame. This method is exceedingly reliable and rapid, but is not suited for the governing arrangements of small engines.

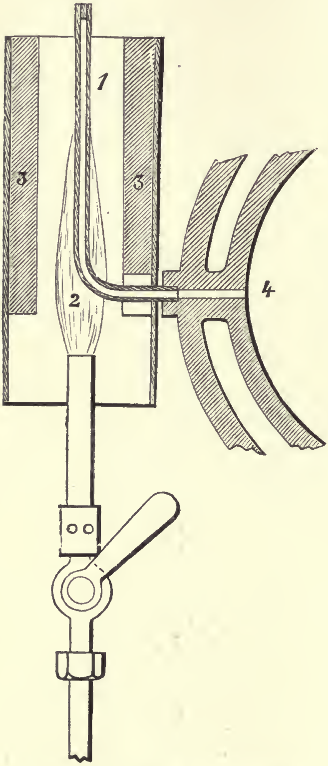

FIG. 86.—Hot Tube Igniter.

Siemens' Tube Method.—Fig. 86 is an arrangement of Siemens' method, as used by Mr. Atkinson in his 'Differential' engine, exhibited at the Inventions Exhibition. The wrought iron tube 1 is heated by the Bunsen flame 2, the non-conducting casing 3 preventing loss of heat; the piston at the proper time uncovers the hole 4 into which the tube is screwed, and the mixture entering under pressure becomes ignited. In other engines the tube is caused to communicate with the cylinder by a valve. This modification is exceedingly simple and works well; care must be taken to avoid overheating, or the explosion may rupture the tube. It is inexpensive and easily renewed when disabled by oxidation.

(4) METHODS DEPENDING ON CATALYTIC AND CHEMICAL ACTION.

The well-known property of spongy platinum of causing the spontaneous ignition of a stream of hydrogen or coal gas directed on it in air, has been proposed as a means of ignition by Barnett (1838). In the arrangement he describes, the platinum is contained in a little cup screwed into the cylinder cover, and the compression of the mixture causes its ignition by contact.

Platinum, however, soon loses this property, and the action is at best too slow for use.

All flame methods of course depend on chemical action, but one proposal has been made, to use the property possessed by phosphorated hydrogen of igniting spontaneously in contact with air. The phosphoretted hydrogen is conducted in small quantity into the mixture to be exploded at every revolution, and its combustion causes ignition.

This proposal has never been carried out in practice.

Summary.—To the author's knowledge no other systems of ignition have been proposed; the flame methods are best suited for small gas engines and will probably continue in use. Considerable improvements may still be effected in ignition valves, and it is possible that external flames may be entirely done away with in future engines. It is somewhat humiliating to the inventor to watch a powerful gas engine at work, developing say 30 horses, and to know that he can at once change the whole and make the engine powerless by blowing out the external flame.

A combination of flame and incandescence methods will doubtless overcome this difficulty, and make the gas engine act without visible flame and without the danger of extinction from draught, to which the present igniting flames are subject.

It is improbable that either the first or fourth methods will again find favour, the electric methods give too much trouble and are at best uncertain.

CHAPTER IX.

ON SOME OTHER MECHANICAL DETAILS.

A GOOD working cycle and good igniting arrangements are the two most important factors in the successful working of a gas engine, but there are other matters whose importance is only secondary to those. The governing gear, the oiling gear, and the starting gear, are of the greatest importance.

These matters will now be described.

The Governing Gear.—In the earlier gas engines, including Lenoir and Hugon, the governing was attempted precisely as is done in the steam engine, the source of power being regulated by throttling. A centrifugal governor acted upon a throttle valve regulating the gas supply, diminishing it when the speed became too great and increasing it when the speed fell.

This was a very bad and wasteful method, as the engineer will at once recognise from his knowledge of the properties of explosive mixtures.

The limits of change allowable in the proportions of gaseous explosive mixtures are very narrow, the gas present ranging from $\frac{1}{7}$ to $\frac{1}{16}$ of the total volume. A mixture containing $\frac{1}{7}$ of its volume of coal gas in air has just sufficient oxygen to burn it and no more; any further increase of gas will pass away unburned, there being insufficient oxygen present for its combustion.

This is therefore the richest mixture which can be used with any economy.

A mixture of air and gas containing $\frac{1}{16}$ of its volume of gas is in the critical próportion; any further dilution, however slight, will cause it to lose inflammability altogether. The governor may act in changing the proportion of gas and air between those limits, that is, the explosion may be so reduced by dilution that it gives only half the power per impulse obtainable with the strongest mixture.

Any further dilution causes the engine to miss ignition altogether, and discharge the gas it has taken into the exhaust pipe, without obtaining any power from it. If, therefore, the governor acts by throttling, the valve is only closed enough to cause the mixture to be so weak as to miss fire; as soon as that point is reached the valve will be closed no further, because at that point the speed of the engine will cease to increase. Fig. 7, p. 14, shows the governor in action upon a Lenoir engine.

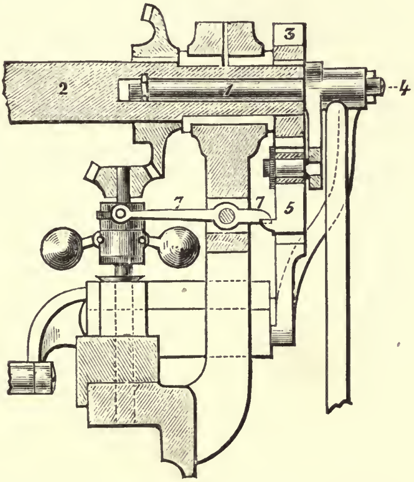

FIG. 87.—Section showing Otto and Langen Governor.

In modern compression engines the great loss of gas occasioned by throttling is avoided by never diluting the mixture. Instead of keeping up the same frequency of impulses but of less power, as done in the steam engine, the gas is either full on or full off, that is, the governing is effected by diminishing the frequency of the impulses instead of diminishing their power.

In the specification of the Otto engine, 1876 (2081) the governing is described as being effected by reducing the power of the explosion. This is more impracticable in the Otto engine than in the Lenoir, because, owing to the dilution of the charge by the exhaust gases or air, the range of change in mixture is smaller. The strongest mixture does not exceed 1 of coal gas in 8 of other gases.

Governing—Otto and Langen Engine.—In this engine, in its latest and best form, the governing is effected by missing impulses. When the engine has received an impulse, the increase in speed causes the governor to move a lever which disengages a pawl from a ratchet, and so prevents the piston being raised and the charge drawn into the cylinder. When the speed has fallen sufficiently the lever liberates the pawl, and the piston is then raised, taking in the charge and exploding it. Fig. 87 is a sectional elevation of the governing arrangements. The auxiliary shaft 1 is driven from the main shaft 2 by the clutch 3, but the crank 4 and shaft 1 receive motion from 2 only by means of the pawl 5 falling into the ratchet 3; so long as the governor lever 7 remains in the position shown, the pawl is kept from engaging and the piston and valve remain at rest; so soon as the governor lever 7 liberates the pawl, then it falls into the ratchet wheel by a spring and the

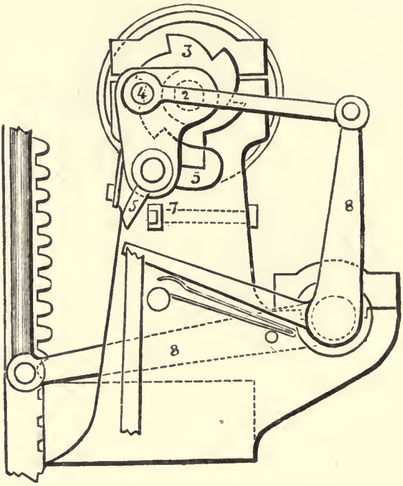

FIG. 88.—Otto and Langen Governor, showing Pawl and Ratchet.

auxiliary shaft receives one turn ; the crank 4, connected to the lever 8 (fig. 88), lifts the rack, and the piston takes in its charge ; at the same time the valve opens to gas and air, then, when the piston is full up, brings on the igniting flame. The explosion occurs and shoots up the piston, which on its down stroke accelerates the motion of the power shaft, and if the limit of speed is exceeded, the governor lever again interposes and prevents the charge and explosion till the speed falls.

When running without any load, the two horse engine tested at Manchester by Clerk required only 6 ignitions per minute, consuming, including side lights, about 25 cubic feet per hour. The shaft therefore ran as many as 15 revolutions merely by the power stored in the fly-wheels.

The governing is effective but irregular.

Governing—Otto Engine.—The speed of the Otto compression engine is governed by diminishing the number of impulses given to the crank ; whenever the normal rate is exceeded, the governor so acts that the gas supply is completely cut off for one or more strokes of the engine, no impulse being given till it falls again.

One arrangement very commonly in use is shown at fig. 89.

The cam 1 upon the auxiliary shaft 2 is arranged to strike the wheel 3 upon the lever 4, opening the gas valve 5 at the beginning of the stroke and keeping it open till the end of the stroke of the piston; the gas passes from the gas valve by a passage to the holes in the slide, when it streams into the air current entering the engine by the admission port. Whenever the speed becomes high enough, the governor 6 by the lever 7 shifts the position of the cam 1 upon its shaft, so that the wheel 3 does not strike it; the gas valve 5 therefore remains shut for that stroke, and the piston draws air alone into the cylinder. When the piston returns and compresses the charge, the igniting flame enters as usual, but there being no explosive mixture there, the piston moves out again without impulse, expanding and discharging, charging and compressing an uninflammable charge, till the reduction of speed calls again for an impulse ; the first ignition after the engine has made several revolutions without gas is always more powerful than the normal one, because no exhaust gases being there the charge mixes in the space with pure air and is not heated previous to explosion.

The arrangement in different Otto engines varies from this, but the principle is always the same.

Fig. 90 is a recent and very clever governing arrangement as used in the smaller Otto engines.

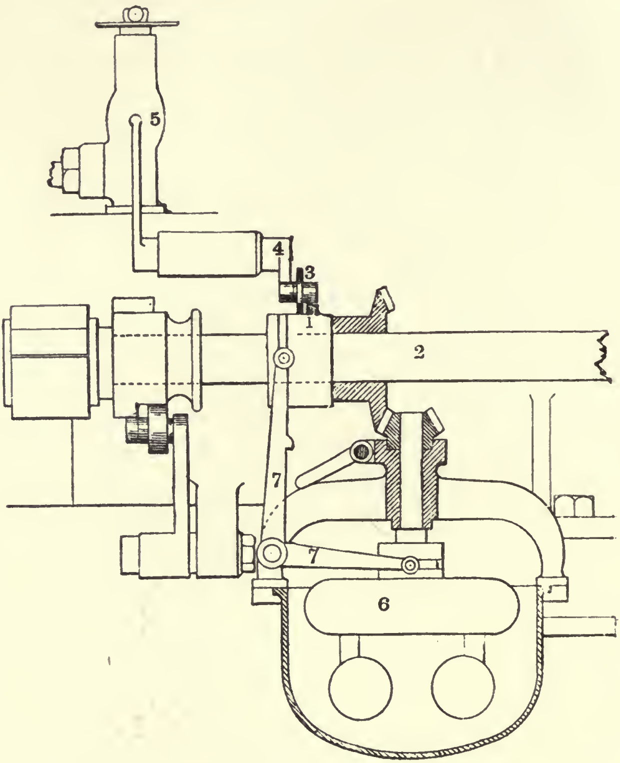

FIG. 89.—Otto Governor and Connecting Gear.

The ordinary governor is entirely dispensed with, and the valve itself carries a pendulum which governs.

The pendulum 1, hanging from the pin 2 in the slide valve 3, carries the long steel blade 4, which usually strikes the stem 5, and opens the gas valve at the same time as the slide opens to the air. Whenever the speed is exceeded, however, the motion of the valve in the direction of the arrow, exceeding a certain rate, the pendulum 1 is left behind and depresses the steel blade 4, which therefore misses the gas valve stem and for that revolution no gas enters. So long as the speed is sufficient to swing back the pendulum no gas enters ; as soon as it is insufficient to cause the pendulum to leave its resting position against the valve, then gas is admitted.

As the pressure of the edge of the steel plate upon the valve stem is in direct line with the centre of the pin upon which the pendulum hangs, there is no tendency to move it, that is, the governor does not furnish the power to open the gas valve. In all the Otto governing arrangements this principle is adhered to ; the governor never furnishes the power to move the gas valve, but only signals to the engine the proper time to give the motion, the motion being always taken from the engine itself.

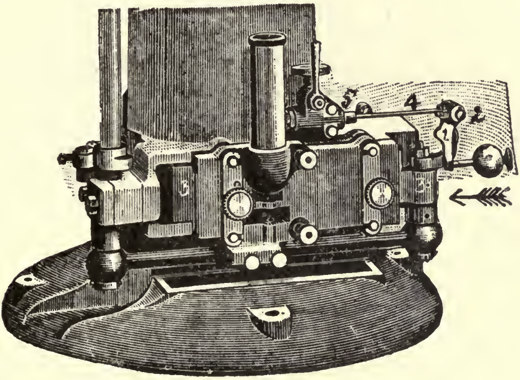

FIG. 90.—Otto Pendulum Governor.

In electric light engines, which must give the impulse for every two revolutions with some change of power, the gear is modified ; instead of complete cut-off as first described, the cam upon the shaft is made in several steps, so that the wheel upon the gas lever is shifted from one to another as shown in fig. 91, where 1 is the gas cam, and 2 is the wheel upon the gas lever. Those steps are made to diminish supply of gas as much as possible without missing ignition, so that within narrow limits of changing load, the engine may retain its frequency of impulse. Whenever this range of permissible variation is exceeded, the wheel slips entirely off the cam, and the engine then governs in the ordinary manner.

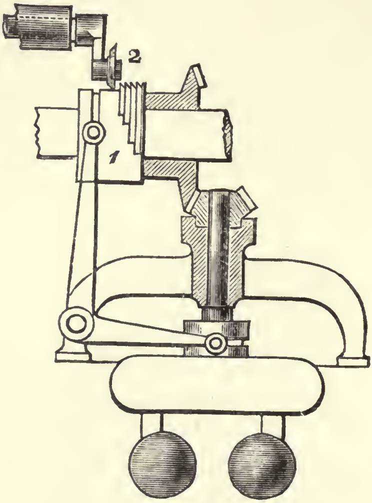

FIG. 91.—Otto Electric Light Governor.

Governing—Brayton and Simon.—In the Brayton gas engine the governing was effected precisely as in the best steam engines, by varying the point of cut-off. The entering flame was cut off, sooner or later, as determined by the governor of the engine; and the admission of gas and air to the pump was simultaneously regulated, the amount entering being diminished to keep the pressure in the reservoir constant. The diagram, fig. 45, p. 158, shows that the variable cut-off acted well.

Fig. 92 shows the governor of the petroleum engine.

The cam 1, which opens the admission air valve on the motor cylinder, is made tapering, so that the point of cut-off becomes earlier and earlier as it slides in the direction of the arrow.

The supply of air was thus diminished. In this engine the supply of petroleum could only be diminished by hand, two screws on the oil pump, when screwed upwards, altering the connecting rod between the plunger and the eccentric, giving more or less free movement, and thereby diminishing the throw of the pump.

The air supply to the engine was not diminished, so that the pressure in the reservoir increased, and was blown off at a safety valve placed upon the engine. This was a wasteful method.

The regularity of this engine in running was very great, being far superior to any of the modern compression engines. It was, however, not at all economical.

Simon's engine presented no new feature in its governing arrangements. They were quite similar to Brayton.

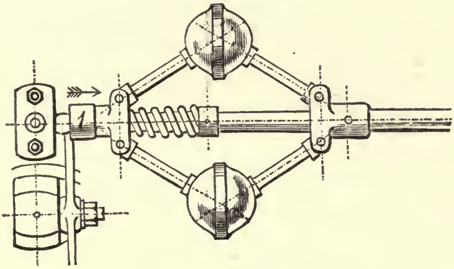

FIG. 92.—Brayton Governor.

Governing—Clerk Engine.—The governing gear now used upon this engine is the design of Mr. G. H. Garrett, Messrs. L. Sterne & Co.'s works' manager. It is shown at figs. 93 and 94.

It consists of a gridiron slide placed between the upper and lower lift valves. So long as the engine is at full power, the slide 1, fig. 93, is moved by the lever 2, fig. 94, from the ignition slide of the engine already described, and remains open during the forward stroke of the displacer piston.

The charge of gas and air therefore enters during the whole stroke, and is sent into the motor cylinder to be compressed and ignited at the proper moment. If, however, the load is lessened, and the speed increases, and the governor 3 acts, it moves the lever 4, which then catches the lever 2, and prevents the spring 5 from taking the slide 1 back and opening it. The displacer then discharges its contents into the motor cylinder, but on its next out-stroke, the valve 1 being closed, it gets no charge but the

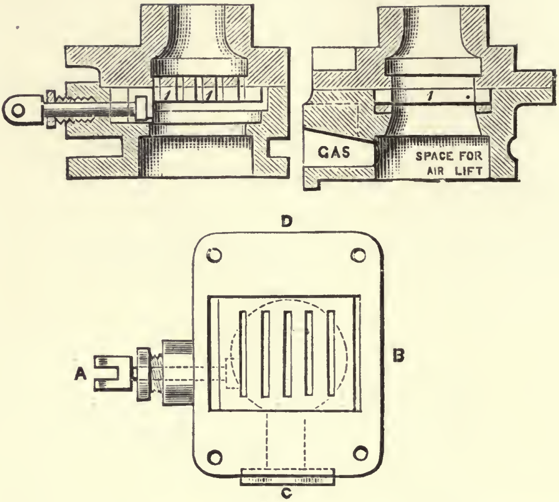

FIG. 93.—Sections and Plan, Governor Slide, Clerk Engine.

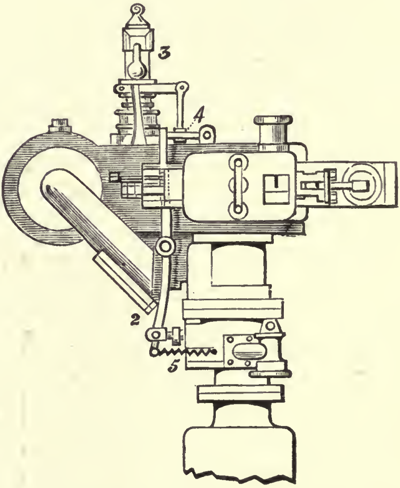

FIG. 94.—Clerk Engine showing Garrett Governor Gear.

piston moves out, forming a partial vacuum behind it. The motor cylinder, therefore, receives no charge from the displacer cylinder, and the motor piston compresses and expands alternately the burned gases behind it, while the displacer piston moves out and in, expanding and compressing likewise. This goes on till the governor signals reduction of speed, and disengages the lever 2, by pushing down the lever 4, so that the spring 5 opens the slide 1, and the engine gets a charge.

This method works very well and economically ; it is necessitated by the clearance space unavoidable in the Clerk engine between the motor and displacer cylinders. If gas were cut off as in the Otto, that space filled with mixture would be lost every time the governor acted.

Governing—Tangye Engine.—Messrs. Tangye's gas engine is now controlled by a very ingenious governor, the invention of Mr. C. W. Pinkney. It is shown at fig. 95. The rod 1 1, moved to and fro by an eccentric, carries with it the bracket 2, into which is fixed the pin 3 ; on this pin the lever 4 is swung, and moves to and fro with the bracket ; the lever is pressed gently downwards by the spring 5, and the lower part of the lever is formed into an incline at 6, so that as it moves the spring presses it against the roller 7. So long as the engine does not exceed its proper speed, the lever 4 does not rise above the position shown

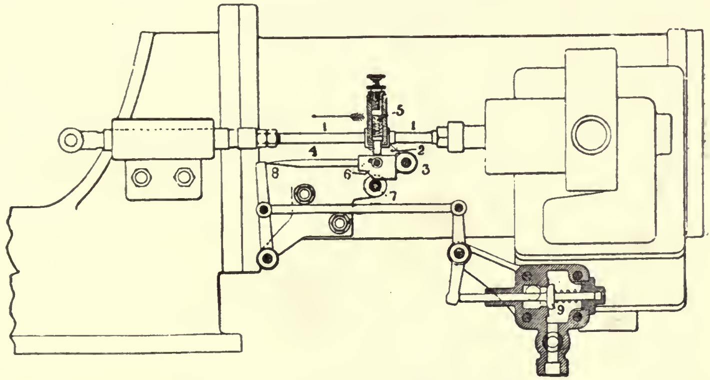

FIG. 95.—Governing—Tangye Engine.

in the figure when it is moving in the direction of the arrow, and accordingly its knife edge end strikes the lever 8 and, acting through the intermediate links, opens the gas valve 9. The engine gets its charge of gas every time the gas valve opens. If the speed becomes too great, then the upward velocity given to the lever 4 by the stationary roller 7 forcing against the incline is such that the knife edge lever 4 rises above the end of the lever 8, and the gas valve remains closed. When the speed falls sufficiently the lever 4 again strikes the lever 8 and opens the gas valve.

The incline governor works well and is exceedingly sensitive to change in speed : by altering the compression upon the spring 5 the speed of the engine can be varied.

Oiling Gear.—In the steam engine the comparatively low temperature of the steam within the working cylinder and the fact of its condensation upon the walls and piston renders the task of lubricating an easy one. The lubrication need not be absolutely continuous and the nature of the oil may vary much and no harm is done.

With the gas engine, the intense flame filling the cylinder at every stroke quickly destroys the film of oil with which it is covered, and necessitates its continuous renewal.

If animal oil be used, its decomposition leaves considerable charred matter, which speedily coats the piston and cylinder, causing friction and danger of cutting. A good hydrocarbon, on the other hand, even when subjected to intense heat, decomposes into gases without leaving any appreciable amount of carbon : mineral oils should therefore alone be used for the cylinder and ignition slide.

The amount of oil required for these parts is small per day, but it must be regularly applied ; the burned film removed from the surface of the cylinder at every explosion must be regularly replaced or abrasion of the surfaces would speedily ensue.

In the Otto engine the oil required is supplied during the whole action of the engine ; it commences with the movement of the engine, continues so long as it is running, and stops when motion ceases.

Fig. 96 shows the Otto oiling cup, one of which is placed, as shown in the drawing, fig. 97, at the middle of the cylinder to lubricate the piston and slide; the pipes 4 and 5 lead to the piston and slide.

The pulley 1 is driven slowly from the auxiliary shaft by a strap, and as it rotates it carries the wire 2 round on the pin 3, fig. 96, alternately dipping into the oil and wiping it off to the pin, from whence it drops into the trough 4 and runs by a hole into the tubes. The amount of oil so discharged can be regulated by the diameter of the wire. The oil flows along the pipes 4 and 5, fig. 97, and drops into holes at 6 and 7, the one oiling the piston every time the trunk comes forward, the other oiling the valve by suitable gutters.

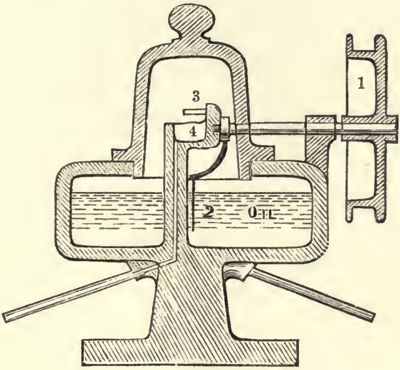

FIG. 96.—Illustration of action of Otto Oiler.

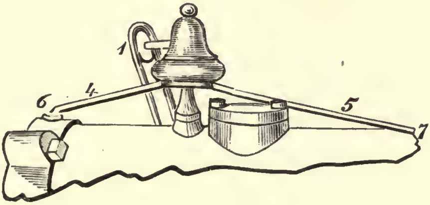

FIG. 97.—Arrangement of Otto Oiler.

The Clerk oiling cup is shown at fig. 98; it is not automatic. The screw pin 1 is set in a position marked for each cup, the motor cylinder cup giving 15 drops per minute, and the valve cup 5 drops per minute.

In both Otto and Clerk engines the slide valves should be taken out and cleaned once a week. The charred oil should be carefully scraped out of the gas gutters and igniting ports; the piston also should be drawn occasionally, once in three months being sufficient. The interior of the cylinder should then be cleaned, especially the explosion space. The Otto exhaust valve should be taken out every week and cleaned. The Clerk upper and lower lift valves require cleaning once every month if the engine is hard worked.

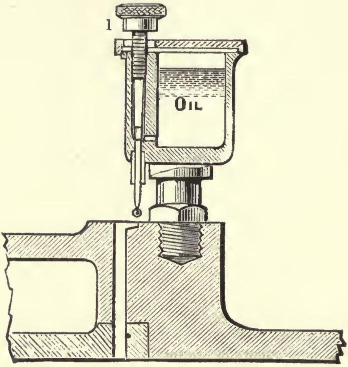

FIG. 98.—Clerk Oil Cup.

In working gas engines the two points requiring attention are oiling and cleaning. Never run the engine, without oil, and clean regularly. Never start without seeing that the water circulation is open.

Starting Gear.—Till very lately, gas engines of every power were started by manual labour; in small machines the inconvenience is not great, but with large engines such as those giving from 20 to 50 indicated horses when at full power, the friction is so considerable that difficulties arise. It is difficult to reduce friction so much that a large machine may be turned with sufficient velocity by a couple of men, to get a sure and easy start.

The Brayton petroleum engine was the first to use reservoirs for retaining sufficient air for starting, but they were so faultily constructed, that leakage and loss were so frequent that the apparatus was of little use. Many arrangements have been described by inventors, but no starting gear found its way into public use till that invented by the present author in the end of 1883. The Clerk engine was the first to use starting gear in public, at the beginning of 1884. Since then over 100 engines have been fitted and are at daily work with it.

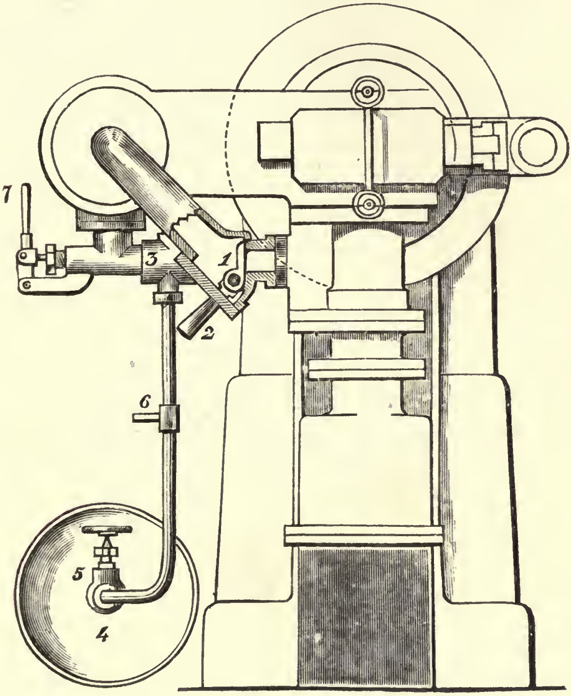

FIG. 99.—Clerk Starting Gear.

The Otto engine speedily followed Clerk's in the application of gear, and after them came Tangye and Atkinson.

Starting Gear—Clerk Engine.—The starting gear used in the Clerk engine is shown at figs. 99 and 100. Its action is as follows.

The flap, valve 1, in the communicating pipe between the displacer and motor cylinders is closed, while the engine is running, by the handle 2; the gases in the displacer are thus prevented from entering the motor cylinder, and are compressed through the valve 3, which is an automatic lift, into the reservoir 4, by the stop-valve 5, which must of course be open.

The ignition being stopped, the speed of the engine falls, and the flap is opened for a few strokes, to allow the speed to get up again. It is then closed again, this being repeated till the reservoir 4 is charged with a mixture of gas and air at 60 lbs. per sq. in. above atmosphere. Five minutes gives ample time to charge from completely empty to 60 lbs. Three minutes suffice if the charge has not been completely taken from the reservoir during the previous start. The relief valve at 6 prevents charging above 60 lbs. per sq. in., the excess blowing into the exhaust pipe. When the reservoir is charged the stop valve 5 is screwed down and the charge is retained in the reservoir till wanted. The reservoir is made of steel, the sides being ½ in. thick and the ends $\frac{5}{8}$″; it is welded throughout, and is tested before leaving the works at 1000 lbs. per sq. in.

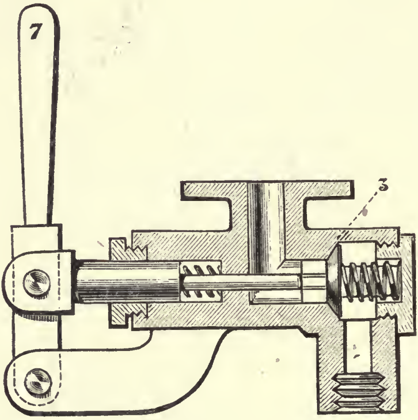

Fig. 100.—Clerk Starting Valve.

The screw down valve 5 and the joint where it is screwed into the end form the only joints for loss by leakage; numerous joints must be avoided, as it is often necessary to leave the reservoir charged for weeks; the faintest leakage would in so long a time lose the contents, and so the start would require to be made by hand.

The reservoir is so pressure tight, when made as described, that the author has left one standing for six weeks and started the engine with ease with what remained.

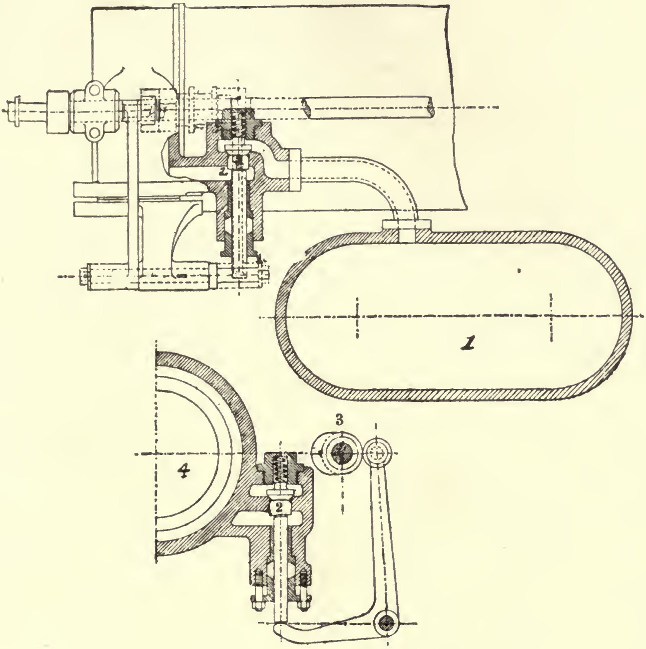

Fig. 101.—Otto Starting Gear.

The starting is effected as follows:

The engine is placed in such position that the motor crank is on the full in centre. The displacer is therefore half forward, the reservoir stop valve is opened, the Bunsen burner is lit, and the gas cock of the engine set at the starting mark. The starting handle 7 is then moved in, opening the valve 3, fig. 100, the gases entering press forward the displacer piston and fill the compression space of the engine, pressing forward the motor piston when its crank comes off the centre. The starting handle is then let go, and the motor piston runs over its ports discharging the contents both of motor and displacer to atmosphere. The engine has thus received a double impulse, one in each cylinder; it is enough to bring round the piston, compress the mixture and get an ignition. One opening or at most two openings of the starting valve are enough. The reservoir contains enough to give six successive starts.

After starting, the reservoir should be again charged and closed so that it may be ready when required.

The gear works very well and is easily handled.

To those accustomed to see gas engines started by hand, it is somewhat astonishing for the first time to watch a large machine move away at once by a mere finger touch upon a valve.

Starting Gear—Otto Engine.—The starting gear used in the Otto engine is shown at fig. 101. It consists of the reservoir 1, the charging and starting valve 2 and a stop valve. The charging valve is loaded so that it does not open with a pressure less than 40 lbs. per square inch, as it communicates with the compression space 4. It follows that the compression of the charge in the cylinder does not lift it, but as soon as the gases explode, the pressure lifts the valve, and the reservoir gets filled slowly with burned gases. If the valve is left open long enough the pressure will rise to within 40 lbs. of the maximum explosion pressure, that is, about 110 lbs. per square inch above atmosphere. The stop valve being screwed down, the gases are retained ready to start the engine when wanted. To start, the stop valve at the reservoir is opened, and the engine crank placed in such position that it is off the centre and on its impulse stroke. The gases then pass through the valve 2 into the cylinder 4, and the valve 2 closes at the end of the stroke actuated by the cam 3. One impulse is thus given and is repeated at the proper time by the action of the cam 3 upon 2, through the intermediate lever. The pressure required is high, because only one forward movement of the piston is available for every two revolutions of the engine. The twin engine therefore starts more easily than the ordinary type of Otto. This gear also works well; it was patented before the Clerk gear, but was later in being introduced into public use.

CHAPTER X.

THEORIES OF THE ACTION OF THE GASES IN THE MODERN GAS ENGINE.

THE general principles developed in this work explaining the causes of the economy of the modern gas engine were first enunciated by the author in a paper read before the Institution of Civil Engineers in April 1882.[1]

He then classified gas engines in three great groups :

Type 1.—Explosion, acting on piston connected to crank. (No compression.)

Type 2.—Compression, with increase of volume after ignition, but at constant pressure.

Type 3.—Compression, with increase in pressure after ignition, but at constant volume.

It was proved that under comparable conditions the relative theoretic efficiencies of the three types were

Type 1 = 0·21
Type 2 = 0·36
Type 3 = 0·45

It was also shown that in the actual engines the real efficiency could not be so high as the theoretic, mainly because of the large proportion of heat lost through the sides of the cylinder, by the exposure of the flame which filled the cylinder to the comparatively cold enclosing walls. A balance sheet was given showing the disposal of 100 heat units by a compression engine. Of the 100 heat units, 17·83 were converted into indicated work, 29·28 were

---

[1] The Theory of the Gas Engine,' by Dugald Clerk : *Minutes, Institute Civil Engineers, London.* Paper No. 1855. April 1882.

discharged with the exhaust gases, and 52·89 units passed through the sides of the cylinder into the water jacket.

The economy of the Otto engine over its predecessors, the Lenoir and Hugon engines, was clearly proved to be due to the fact of its using compression previous to explosion.

These conclusions were very generally accepted by scientific and practical men who had studied the subject, and in February 1884 the late Prof. Fleeming Jenkin, then Professor of Engineering at the University of Edinburgh, delivered a lecture at the Institution of Civil Engineers in London, on 'Gas and Caloric Engines.'[1] He had recalculated the efficiencies due to compression, with the result of corroborating the present writer's conclusions. He states:

'If I were to compress gas to 40 lbs., a pressure which is used not unfrequently, the theoretical efficiency would be 45 per cent. We actually get something like 24 or 23 per cent.; we know that one-half of the heat is taken away by external cooling. Thus we find a very close coincidence between the calculated efficiency of those engines and that which we actually obtain, only we throw away about one-half of the heat in keeping the cylinder cool enough to permit lubrication. If we compress to 80 lbs. we have a theoretical efficiency of 53 per cent. If we do not compress at all, as Mr. Clerk has told you, we have a theoretical efficiency of only 21 per cent., so that we have it in our power to increase the theoretical efficiency very greatly by increasing the pressure of the gas and air before ignition. I have no doubt that the great gain of efficiency in the Clerk and Otto engines is really due to the fact of the compression; this being done in a workmanlike way and carried to a very considerable point.'

The advantages of compression could not be stated with more clearness and truth.

In the same year there was published in Paris an able work entitled 'Études sur les Moteurs à Gaz Tonnant,' by Professor Dr. Aimé Witz, of Lille, in which the theoretic efficiencies of the different types of cycle are calculated for a maximum temperature of explosion of 1600° C., and temperature before explosion of 15° C.

---

[1] 'Heat in its Mechanical Applications': *Institute Civil Engineers' Lectures.* Session 1883–84.

He adopts the same classification as the present writer did in 1882, and finds the efficiencies:

Type 1 = 0·28
Type 2 = 0·38
Type 3 = 0·44

which are almost identical with the author's figures.

He also arrives at the conclusion that compression is the great source of economy in the modern gas engine. At p. 53 he says: 'I find myself again in agreement with Mr. Dugald Clerk when he affirms that the success of Otto is due to compression alone, and not to the extreme dilution of the explosive mixture in the products of the combustion of a precedent explosion.'

He then proceeds to quote from the present writer's paper, and adheres to the statement that—

'Without compression previous to ignition an engine cannot be produced giving power economically and with small bulk.'

Compression previous to ignition gives two great advantages:

(1) A thermodynamic advantage (improved theory of the cycle);

(2) Higher available pressures and smaller cooling surfaces —the joint result being an economy in practice nearly fourfold that of the old non-compression engines.

MR. OTTO'S THEORY.

Previous to 1882 the nature of the improvement obtained by compression was imperfectly understood, and this notwithstanding the very clear, though qualitative, statements of Schmidt, Million, and Beau de Rochas. An erroneous theory of the cause of the economy of the Otto engine was widely circulated and gained considerable support.

It was enunciated in Mr. Otto s specification of 1876, No. 2081, and it was and is still, so far as the author is aware, supported by men so distinguished as Sir Frederick Bramwell, Dr. Slaby of Berlin, Prof. Dewar of the Royal Institution, and Mr. John Imray.

According to Mr. Otto, all gas engines, previous to his patent of 1876, obtained their power from the explosion of a homogeneous charge of gas and air. By the explosion excessive heat was evolved, and the pressures produced rapidly fell away; the excessive heat was rapidly absorbed by the enclosing cold walls.

This caused great loss and gave very wasteful engines. Two methods were open to obtain better economy:

1st, by using a very rapid expansion, so that the heat had but little time to be dissipated;

2nd, by using slow combustion; that is, by causing the inflammable mixture to evolve its heat slowly, so that the production of excessive temperatures and pressures was avoided.

By the first method all the heat was supposed to be evolved at once, and a high temperature was produced: by the second method the heat was evolved gradually so as to give a low temperature and pressure which was sustained throughout the stroke, and which was advantageously utilised by the piston while moving at a moderate speed. Mr. Otto states that this gradual evolution of heat may be produced by stratifying the charge of gas and air. Instead of using the homogeneous charge of Lenoir and Hugon, Mr. Otto uses a charge which he states is not homogeneous but heterogeneous. He affirms that his invention lies in the method or process of forming this stratified charge in a gas-engine cylinder, and that, in addition to the explosive mixture, there must be present in the cylinder a mass of inert gas which does not burn but which serves to absorb the heat of the explosion and prevent the loss which would otherwise occur by the cooling effect of the cylinder walls.

The 'inert' gas may be either air alone which is capable of supporting combustion, or the products of combustion which are incapable of supporting combustion, or a mixture of both. It is not sufficient that a mere film of this inert gas be present; there must be what is termed a 'notable' quantity.

Mr. Otto proposes to form this heterogeneous or stratified charge by first drawing into the cylinder a charge of air alone; and second, a charge of explosive mixture, or by leaving in the cylinder a sufficient quantity of the products of a previous combustion to form a 'notable' quantity of inert diluent.

The compression space in the Otto engine is supposed to contain a sufficient volume of burned gases to form the inert diluent, so that the whole stroke of the piston is available for taking in the explosive charge.

Suppose the piston to begin its charging stroke : the coal-gas and air mixture flows into the cylinder through the inlet port and mixes to some extent with the inert gas already in the space ; but the mixing is incomplete, and at the piston itself the charge is supposed to consist entirely of exhaust gases. So that, while the charge at the igniting port is readily explosive, that at the piston is not explosive at all, and between the igniting port and the piston the composition of the charge varies from point to point.

This 'arrangement of the gases' is supposed to be retained during compression, and exist at the moment of explosion. The compression space contains a 'packed charge,' which consists of an explosive mixture at the one end, and between the explosive mixture and the piston a cushion of inert fluid, which is uninflammable and serves the double purpose of relieving the piston from the shock of explosion and absorbing heat which would otherwise be lost by conduction.

By this device, heat is gradually evolved. The flame originated in the port burns at first with great energy and spreads from one combustible particle to another, more and more slowly as it approaches the piston, where the particles are dispersed more and more in the inert gas. The mixture is so arranged that this burning lasts throughout the whole stroke, and is complete very shortly before the exhaust valve opens.

The entire cylinder is never completely filled with flame, but the charge at one end has burned out before the flame arrives at the other end.

Dr. Slaby comes forward in support of this hypothesis in an interesting report published as an Appendix to Prof. Fleeming Jenkins' lecture already referred to.

Dr. Slaby states : 'The essence of Otto's invention consists in a definite arrangement of the explosive gaseous mixture, in conjunction with inert gas, so as to suppress explosion (and nevertheless insure ignition).

'At the touch hole, where the igniting flame is applied, lies a strong combustible mixture which ignites with certainty. The flame of this strong charge enters the cylinder like a shot, and during the advance of the piston it effects the combustion of the farther layers of dispersed gaseous mixture, whilst the shock is deadened by the cushion of inert gases interposed between the combustible charge and the piston.

'The complete action takes place in a cycle of four piston strokes. The first serves for drawing in the gases in their proper arrangement and mixture; the second compresses the charge; during the third the gases are ignited and expand; and finally, by the fourth the products of combustion are expelled. The essential part of the working is performed by the first of these strokes, by which the charge is drawn in and arranged, first air, then dilute combustible mixture, and finally strong combustible mixture. This arrangement is obtained by the working of the admission slide. Moreover, after discharge of the products of combustion, a portion remains in the clearance space of the cylinder, and this constitutes the inert layer next the piston. By this peculiar arrangement of the gases, the ignition and combustion above described are rendered possible, whilst the products of previous combustion form a cushion, saving the piston from the shock of the explosion of the strongly combustible mixture at the farther end of the cylinder.'

Having stated the essence of Otto's invention, Dr. Slaby proceeds to compare the Otto and Lenoir indicator diagrams, to show that the Otto diagrams prove that the above actions occur in the engine. He finds that the Otto expansion line is somewhat above the adiabatic line, and that the Lenoir expansion line is below it. That is, the Otto diagram gives evidence of heat being added or combustion proceeding in the cylinder during the whole expansion stroke, and the Lenoir diagram gives evidence of loss of heat, not gain, during a similar period. If a mass of expanding gas traces on the diagram the adiabatic line, then it appears as if no loss of heat occurred; but as the temperature of the flame filling the cylinder is known to exceed 1200° C., it must be losing heat to the water jacket. To make the expansion line keep up to the adiabatic a great flow of heat into the gas must be taking place, and as the only source of heat is combustion, it follows that the gas is burning during the expansion period.

Dr. Slaby calculates the proportion of heat evolved by the explosion in the Otto engine as 55 per cent., leaving 45 per cent. to be evolved during expansion.

This he states is due to the portion of the charge which continues to burn after the explosion.

The curve differs from Lenoir's in this, that while in Lenoir's engine *all the heat is evolved at the moment of explosion*, leaving none to be evolved during expansion, in Otto's only a part is evolved at first, and the reserved portion keeps up the temperature during expansion.

He concludes from his experiments that the action of the Otto engine is truly as Mr. Otto states in his specification—explosion is suppressed and a slow evolution of heat is obtained, and this slow evolution of heat is the result of the invention and the cause of the economy of the engine.

In addition to this indirect proof, experiments have been made at Deutz and elsewhere to show directly that stratification has a real existence in the Otto engine.

An Otto engine was constructed, specially fitted with two igniting valves ; one valve was placed on the side of the cylinder at the end of the explosion space next the piston, so that it could ignite the gases at the piston ; the other valve was the usual one at the end of the cylinder, igniting the gases in the admission port.

Experiments were made to discover if the side valve would fire the mixture at the piston ; it was found that it did so. Consecutive ignitions were obtained there.

Diagrams were taken for comparison, with the end and the side valves in alternate action, care being taken to keep the charge in the same proportions during the trials. It was found that although the side valve ignited as regularly as the end valve, yet the diagrams were different. Instead of the usual rapid ascending explosion line, the explosion took place more slowly, and the maximum pressure was not attained till late in the stroke.

The ignitions were slower from the side valve than from the end valve. If an uninflammable cushion, such as Dr. Slaby so clearly describes, existed at the piston, one would expect that the side valve would fail entirely, but it ignited quite regularly although more slowly than the end valve.

This experiment is considered to prove stratification.

To make stratification visible to the eye, a small glass model was constructed. It consisted of a glass cylinder of about 1½ ins. internal diameter, containing a tightly packed piston connected to a crank; the stroke was about 6 ins.; when full back, the piston left a considerable space to represent the explosion space. A brass cover was fitted to the end of the tube, and in it was bored a hole of about ¾ in. diameter, representing the admission port; in this hole was screwed a pet cock to which a cigarette was affixed.

On lighting the cigarette and then moving the piston forward by the crank, it was seen that the smoke of the cigarette which passed in did not completely fill the cylinder; the smoke slowly oozed in and left a large clear space between it and the piston. The smoke was supposed to represent the charge of gas and air rushing in, and the clear air behind the piston the cushion which was said to exist in the Otto engine. It was supposed that in the glass cylinder was repeated on a small scale the action of the gases occurring on a larger scale in the Otto engine. In a recent paper in a German engineering journal, Dr. Slaby recounts this experiment, and lays great weight upon it. He considers that it undoubtedly proves the truth of the Otto theory.

In discussion Mr. John Imray concisely states the Otto position as follows:

'The change which Mr. Otto had introduced, and which rendered the engine a success was this: that instead of burning in the cylinder an explosive mixture of gas and air, he burned it in company with, and arranged in a certain way in respect of, a large volume of incombustible gas which was heated by it, and which diminished the speed of combustion.'

And Mr. Bousfield states it in similar terms:

'In the Otto gas engine the charge, varied from a charge which was an explosive mixture at the point of ignition to a charge which was merely an inert fluid near the piston. When ignition took place, there was an explosion close to the point of ignition that was gradually communicated throughout the mass of the cylinder. As the ignition got further away from the primary point of ignition, the rate of transmission became slower, and if the engine were not worked too fast the ignition should gradually catch up the piston during its travel, all the combustible gas being thus consumed. When the engine was worked properly the rate of ignition and the speed of the engine ought to be so timed that the whole of the gaseous contents of the cylinder should have been burned out and have done their work some little time before the exhaust took place, so that their full effect could be seen in the working of the engine. This was the theory of the Otto engine.'

From these quotations it will be seen that Mr. Otto's supporters agree that Mr. Otto has invented a means of suppressing explosion, and substituting for explosion a regulated combustion, and that this process is the cause of the economy of the engine. They are agreed that he has succeeded in preventing explosion, and that he does this by arranging or stratifying the charge which is to be used. They consider that engines previous to Mr. Otto's were wasteful because they used a homogeneous and therefore explosive charge, and that Mr. Otto's engine is economical because it uses a heterogeneous or stratified charge, which is consequently non-explosive.

Discussion of Mr. Otto's Theory.

The primary fallacy of Mr. Otto's theory lies in the assumption that previous engines were more explosive than his, and that in previous engines all the heat was evolved at once: as a plain matter of fact this is incorrect. In the Lenoir and Hugon engines, as in all explosive engines, little more than one-half of the total heat is evolved by the explosion, and the portion reserved is evolved during the stroke of the engine.

The following test of a Lenoir engine, made by the author in London, very clearly shows the suppression of heat at first:

Lenoir engine rated at one horse power.
Cylinder $7\frac{1}{8}$ inches diameter; stroke $11\frac{3}{4}$ inches.
Average revolutions during test, 85 per minute.
Gas consumed in one hour, 86 cubic feet.

With full load, indicated horse power, 1·17 (average of 9 diagrams).
Gas consumed per indicated horse power per hour, 73·5 cubic feet.
Maximum temperatures of explosion, 1100° to 1200° C.
Mixture in engine 1 vol. coal gas, 12·5 vols. of air and other gases.
Heat evolved by explosion, 60 per cent. of total heat.

The proportion of the mixture was calculated from the points of cut-off on the diagram, and after making allowance for the volume of burned gases in the clearances of the engine. It will be observed that only 60 per cent. of the gas is burned at first, leaving 40 per cent. to be burned during the stroke, and also that the temperature of the explosion never exceeds 1200° C. Now in the Otto engine, according to Thurston, 60 per cent. of the heat is evolved at explosion, and 40 afterwards, and the usual maximum temperature is about 1600° C. So that, so far as the slowness of the explosion is concerned, there is no difference, and in the intensity of the temperature produced, the Otto exceeds the Lenoir.

It is difficult to understand how Dr. Slaby could fall into so obvious an error as he did, and suppose that more heat was kept back in the case of the Otto explosion. At the time he wrote his report, accounts of Hirn's, Bunsen's, and Mallard's experiments on explosion were in existence, all of them agreeing on the fact of a large suppression of heat at the maximum temperature of the explosion, although differing in the explanation of the fact.

Hirn even stated that in the Lenoir engine the pressures fell far short of what should be, if all the heat were evolved at once. Yet Dr. Slaby, in the presence of all this definite and carefully ascertained knowledge, is astonished when he finds only 55 per cent. of the total heat evolved by the explosion in the Otto engine, and the only explanation which occurs to him is that of stratification.

If stratification exists at all in the engine, then it produces no measurable change in the explosion; it neither retards the evolution of heat, nor does it moderate the temperature.

The explosion and expansion curves are precisely what they would have been with a homogeneous charge.

The mere fact that heat is suppressed in the Otto explosion proves nothing, because a precisely equivalent amount of heat is suppressed in all gaseous explosions, and Dr. Slaby's contention, based upon the supposed peculiarity of the Otto, falls to the ground.

Dr. Slaby has been led into error by the fact that the expansion line of the Lenoir diagram falls below the adiabatic, while the expansion line of the Otto diagram remains slightly above it or upon it. He assumes that in the Lenoir no heat is being added during expansion, whereas just as much heat is being added, or just as much combustion is proceeding during the Lenoir stroke, only the cooling of the cylinder walls is greater, and the heat is abstracted so rapidly that the line falls below the adiabatic. This is due to two causes, (1) the greater proportional cooling surface exposed by the Lenoir engine, and (2) a longer time of exposure. The absence of compression and the slow piston speed makes the loss greater.

Although quite as much heat is evolved during the stroke, it is overpowered by the greater cooling, and the line falls under the adiabatic. This fall is evidence of greater cooling, not of less evolution of heat.

In a recent paper,[1] 'Die Verbrennung in der Gasmaschine, Professor Schöttler makes this explanation of the difference between the lines, and states that 'Whether stratification exists or does not exist in the Otto engine it is unnecessary, and is not the cause of the slow falling of the expansion line.' In all crucial points the Otto theory breaks down, as proved by diagrams taken from his engine.

The explosion is not suppressed; the maximum temperatures produced are not lower than those previously used; the mixture used is not more diluted than in the previous engines, and the intensity of the pressures, as well as the rate of their application, is greater.

The mixture in the engine from Slaby's figures is 1 vol. coal gas to 10·5 vols. of other gases, and from Thurston's figures 1 vol. coal gas to 9·1 vols. of other gases, while Lenoir often used 1 vol. gas to 12 of air.

---

[1] *Zeitschrift des Vereines deutscher Ingenieure.* Band xxx., Seite 209.

The engine instead of using a less explosive power than the Lenoir engine uses one more intensely explosive.

The effect of the reduction of cooling surface and increase of piston velocity is to diminish the loss of heat to the cylinder walls, and the slowly descending line is not the cause of the economy, but is the effect and evidence of it.

Stratification.—The inquiry into the existence or non-existence of stratification in the cylinder has no practical bearing on the question of economy, as the explosion curves act precisely as they would with homogeneous mixtures. Scientifically, however, the question is interesting and will be shortly considered.

The evidence which it is considered proves its existence in the Otto engine is in the author's opinion most unsatisfactory. Dr. Slaby distinctly asserts the existence of an inert stratum next the piston, 'interposed between the combustible charge and the piston,' and Mr. Imray speaks of the 'arrangement of the charge in respect of a large volume of incombustible gases,' and Mr. Bousfield of 'a charge which was merely an inert fluid next the piston.' Yet all the evidence in support of these positive assertions is given by one experiment made with an Otto engine, and one with a small glass model. The evidence given by the experiment on the engine itself, in the author's opinion, disproves stratification in the Otto sense altogether. If the inert stratum next to the piston had any real existence, then the side igniting valve in the experiment made by Mr. Otto, should not have ignited the mixture at all. The fact that it did ignite regularly and consecutively, proved most distinctly that the gas next the piston was not inert but was explosive, and being explosive in itself it could not act as a cushion to absorb heat or shock. That experiment alone settles the question, and proves at once the visionary nature of the cushion of inert gas next the piston.

The fact that the ignitions were slower than those from the end slide does not get rid of the fact that ignition did take place, and to those who understand the sensitive nature of any igniting valve, it will not be difficult to comprehend how small a difference in adjustment will cause late and slow ignitions. At the very utmost the experiment points to a small difference in the dilution of the explosive mixture at the piston and that at the end port.

Experiments made by the author also prove that the mixture in the Otto cylinder is present in explosive proportions close up to the piston. The piston of a 3½ HP Otto engine was bored and fitted with a screw plug, which carried a small spiral of platinum wire in electrical connection with a battery; the platinum spiral projected from the inner surface of the piston by a quarter of an inch. When the engine was running in the usual way, the wire was made incandescent by the battery and the external light was put out. It was proved that by a little care in getting the platinum to a certain temperature, the engine worked as usual, igniting regularly and consecutively. The spiral was made just hot enough to ignite when compression was complete, but not hot enough to ignite before compressing. If an incombustible stratum had existed even so close to the piston as ¼ in. then the wire should never have been able to ignite the charge at all. If the wire was made too hot, then ignition often took place while the charge was still entering, proving that no stratification existed even while the charge was incomplete. A little consideration of the arrangement of the Otto engine will show that stratification cannot have any existence in it. The end of the combustion space is usually flat, and sometimes the admission port projects slightly into it; the area of the admission port is about $\frac{1}{30}$ of the piston area; accordingly the entering gases flow into the cylinder at a velocity thirty times the piston velocity, or at the Otto piston speed, about 120 miles an hour.

Great commotion inevitably occurs; the entering jet projects itself through the gases right up against the piston, and then returns eddying and whirling till it mixes thoroughly with whatever may be in the cylinder. The mixture becomes practically homogeneous even before compression commences.

Experiments made by Dr. John Hopkinson and the author on full size glass models of the Otto cylinder show this mixing action very beautifully. A 3½ HP Otto cylinder was copied in every proportion in glass, and the valve was so arranged that it passed a charge of smoke at the proper time. The piston was placed at the end of its stroke, leaving the compression space filled with air. When pulled forward the valve opened to a chamber filled with smoke, and the smoke rushed through the port, projected right through the air in the space, struck the piston, and filled the cylinder uniformly, much faster than the eye could follow it. It mixed instantaneously with the air in the cylinder without evincing the slightest tendency to arrange itself in the manner imagined by Mr. Otto. Mr. Otto's experiment with a cigarette and glass cylinder does not, in the most remote degree, imitate the conditions occurring in his engine; the proportions are quite wrong. The model is much too small, and the glass cylinder is too long in proportion to its diameter; then the gases are so badly throttled by passing through the cigarette, that when the piston is moved forward it leaves a partial vacuum behind it, and only a little smoke enters, not nearly enough to follow up the piston, but only sufficient to ooze into the back of the cylinder while the piston moves forward and expands the air which is already in the cylinder. It was easy for Mr. Otto to have copied his cylinder and valve full size and imitated precisely the conditions existing in his engines.

Had he done this he would have proved complete mixing instead of stratification. Why did he refrain from doing this? The question at issue is not, Can stratification be obtained by a specially devised form of apparatus—no one doubts that it can—but, Does stratification exist in the Otto engine? If it does not exist in the Otto engine then it is perfectly plain that it cannot be the cause of the economy of the motor, and it is quite certain that it cannot exist in the Otto engine. Prof. Schöttler, in the paper already referred to, also arrives at the conclusion that stratification has no existence in the Otto engine, and that Mr. Otto's small glass model does not truly represent the actions occurring in the engine.

In all gas engines, when the charge enters the cylinder through a port the residual gases in the port are swept into the cylinder, and while the port itself is filled with gas and air mixture, free from admixture with residual gases, the cylinder contains the gas and air mixture diluted with whatever residual gases exist in the engine which have not been expelled by the piston. The mixture in the port is accordingly stronger and more inflammable than the mixture in the cylinder.

In the Lenoir and Hugon engines this occurred to a marked extent; in the Hugon engine as much as 30 per cent. of the whole charge consisted of residual gases, and the charge in the cylinder was considerably more dilute than that in the admission port. In the Otto engine this also occurs, but it is not stratification, and it is not a new invention; the cylinder is filled with explosive mixture more dilute than that in the ignition port, but still explosive throughout.

CAUSES OF THE SUPPRESSION OF HEAT AT MAXIMUM TEMPERATURE IN GASEOUS EXPLOSIONS.

Although experimenters are unanimously agreed upon the fact of the suppression of heat at the maximum temperatures produced by gaseous explosions, they differ widely in their explanation of the causes producing this suppression.

Three principal theories have been proposed—

1. *Theory of Limit by Cooling.*—This is Hirn's theory, and it assumes that when explosion occurs, a point is reached when the cooling effect of the enclosing walls is so great that heat is abstracted more rapidly than it is evolved by the explosion, and accordingly the temperature ceases to increase and begins to fall.

The maximum temperature falls short of what it would do if no heat were lost during the progress of the explosion to the walls. If it be true that the cold surface of the vessel is the limiting cause, then the maximum pressure produced in exploding the same gaseous mixture, in vessels of different capacity, will greatly vary. When the vessel is small and the surface therefore relatively large, more heat should be abstracted and lower pressure should be produced. This is not the case. The maximum temperature produced by an explosion is almost independent of the capacity of the vessel. Surface does not control maximum temperature, although increased surface increases the rapidity of the fall of temperature after the point of maximum temperature.

2. *Theory of Limit by Dissociation.*—This is Bunsen's theory, and it is undoubtedly largely true. The fact that no unlimited temperature can be attained by combustion, even when the use of non-conducting materials prevents cooling almost completely, is so conclusively established by science and practice that gradual

combustion due to dissociation may be safely taken as occurring to a considerable extent at the higher temperatures used in gas engines. But there is a difficulty in its application to all cases. In experiments made with explosions in a closed vessel the suppression of heat is almost the same at low temperatures as at high temperatures; thus with hydrogen mixtures—

Max. temp. of explosion 900° C.; apparent evolution of heat 55 per cent.
,, ,, ,, 1700° C. ,, ,, ,, 54 ,,

If dissociation were the sole cause, then as water must dissociate more at the higher temperature than at the lower, the apparent evolution of heat should be less at 1700° C. than at 900° C. It is not so. Some other cause than dissociation must therefore be acting to check the increase of temperature so powerfully at 900° C.

3. *Theory of Limit by the Increasing Specific Heat of the Heated Gases.*—Messrs. Mallard and Le Chatelier have advanced the theory that up to temperatures of about 1800° C. dissociation does not act at all or only to a trifling extent. They consider that the gases are completely combined or burned at the maximum temperature of the explosion. But the specific heat of nitrogen, oxygen, and the products of combustion increases with increasing temperature, becoming nearly doubled when approaching 2000° C. The apparent limit is due, not to the suppression of combustion as required by the dissociation theory, nor to the loss of heat by the theory of cooling, but to the absorption of the heat which is completely evolved by the increasing capacity for heat of the ignited gases. The same objection applies to this as to the dissociation theory. If it were entirely true that specific heat increased with increasing temperature, a greater proportion of heat would apparently be evolved at the lower temperatures, which is not always the case.

It is impossible to discriminate between the effect produced by increased specific heat and the effect produced by dissociation on the explosion curves.

Those are the three principal theories which have been proposed, and in the author's opinion none of them completely explains the facts. The phenomena of explosion are very complex, and no single cause explains the limit and other phenomena of gaseous explosion. These phenomena are more complex than have generally been supposed. In many chemical combinations it has been proved by Messrs. Vernon-Harcourt and Esson, and Dr. E. J. Mills and Dr. Gladstone, that the rate at which the reaction proceeds depends upon the proportions existing between the masses of the acting substances present, and those neutral to the reaction, and that combination proceeds more slowly as dilution increases. From this it follows, that in a combination where no diluent is present, the first part of the action is more rapid than the last; at first all the molecules in contact are active, but after some combination has occurred the product acts as a diluent. The last portion of the reaction, having to proceed in the presence of the greatest dilution, is comparatively slow. Such an action the author considers occurs in all gaseous explosions, and is one of the causes preventing the complete evolution of all the heat present at the moment of the explosion.

The subject is a difficult one, and more experiment is required for its complete settlement.

CHAPTER XI.

THE FUTURE OF THE GAS ENGINE.

SINCE 1860, when by the genius and perseverance of M. Lenoir the gas engine first emerged from the purely experimental stage, it has steadily and continually increased in public favour and usefulness. At first more wasteful of heat than the steam engine, it is now more economical; at first delicate and troublesome in the extreme, it is now firmly established as a convenient, safe and reliable motor; at first only available for small and trifling powers, now really large and powerful motors are used in thousands. Many inventors have contributed to its progress, but its present position is in the main due to the patience, energy and commanding ability of one man—Mr. Otto.

In 1860, the efficiency of the gas engine was only 4 per cent.; in 1886, the efficiency of the best compression engines is 18 per cent.

That is, at first a gas engine could only convert 4 out of every 100 heat units given to it into mechanical work, as developed in the motor cylinder; now it can give 18 out of every 100 units as indicated work.

Having advanced in economy more than fourfold in the past twenty-five years, what limits exist to check its progress in the future?

Apart from the greater perfection of the mechanical arrangements of the gas engines of to-day, the great cause of improvement since 1860 is the successful introduction of the compression principle.

Can this principle be much further extended in its application? In the author's opinion, No.

By undue increase of compression the negative work of the engine would be much increased, and the strains would become so great that heavier and more bulky engines would be required for any given power. Friction, due to this, increases more rapidly than efficiency; consequently the gain in indicated efficiency would be more than compensated by loss of effective power. Improvement must be sought elsewhere.

The most obviously weak point of the present engine is insufficient expansion. In the Otto engine the exhaust valve opens while the gases in the cylinder are still at a pressure of 30 pounds per square inch above atmosphere; in the Clerk engine the pressure is sometimes as high as 35 pounds per square inch above atmosphere at the moment of exhaust.

The gas engines discharge pressures, without utilising them, with which many steam engines commence.

There is evident waste here, which can be remedied by using further expansion. In continuing expansion the loss of heat to the cylinder would not be so great as in the earlier part of the diagram, because the temperature is greatly reduced; it may therefore be supposed, without appreciable error, that the added portion of the diagram would give at least as good a result when compared with its theoretical efficiency as the earlier part. If the expansion be carried so far that the pressure falls to atmosphere, then the theoretical efficiency of an Otto engine would be 0·5; theoretically its cycle would then be able to convert 50 per cent. of the heat given to it into indicated work; practically the compression gas engine at present converts one-half of what theory allows; therefore with the greater expansion it may be expected to give one-half of 50 per cent.—that is, expansion only will raise the practical efficiency from 18 per cent. to 25 per cent.

By complete expansion to atmosphere, the gas consumption of an Otto or Clerk engine could be reduced from 20 cubic feet per IHP hour, to 14·5 cubic feet per IHP hour. There are, of course, practical difficulties in the way of expanding, but they will be overcome in time. Mr. Otto has attempted greater expansion in various ways, and so has the author, but as yet neither has succeeded in carrying it beyond the experimental stage.

It must not be supposed, as it too often is, that a high exhaust pressure means an uneconomical engine, or that comparisons of pressure of exhaust give the smallest clues to the relative economy of engines. It is a very common, but a very erroneous, belief that if the pressure in the cylinder of a gas engine is very near atmospheric pressure when the exhaust valves open, that fact is a proof that the engine is economical.

This is not so—indeed, it may be the very reverse.

In engines of type 3, for example, in which, as in the Otto and Clerk engines, the expansion after explosion is carried to the initial volume existing before explosion and no further, it has already been shown that the actual indicated efficiency is quite independent of the increase of temperature above the temperature of compression. That is, the temperature of the explosion may be anything whatever above the temperature of compression without either increasing or diminishing the indicated economy.

Suppose an Otto diagram with three expansion lines, (1) max. temp. 600° C., (2) max. temp. 1000° C., and (3) max. temp. 1600° C., the maximum temperatures in the three cases being attained at the beginning of the stroke, the efficiency of these three lines is identical. Of course the total indicated power increases with increase of temperature, and diminishes with diminution of temperature, but the proportions of the heat given by the engine as work in the three cases remain constant.

The same thing applies to any number of intermediate temperatures.

It might be supposed that the line 1 by expanding more nearly to atmosphere would be the more economical, and that the line 3, because of the high pressure of exhaust, was the more wasteful.

It is a peculiarity of this cycle, with the expansion stated, that the efficiency is absolutely dependent upon compression alone—that is, the ratio of volume before and after expansion—and is quite independent of the maximum temperature.

The case at once alters if expansion be carried to atmosphere. Here the line 3 would give far greater economy than the others, and efficiency would increase with increase of explosion temperature.

Suppose complete expansion successfully applied to the gas engine, and an actual indicated efficiency of 25 per cent. attained, can any further improvement be hoped for?

What causes the difference still existing between theory, which shows a possible 50 per cent., and practice, which may now realise 25 per cent.?

The great loss is heat flowing from the exploded gases through the cylinder walls. Dr. Slaby's balance-sheet of the Otto engine shows—

	Per cent.
Work indicated in cylinder	16·0
Heat lost to cylinder walls	51·0
Heat carried away by exhaust	31·0
Heat lost by radiation, etc.	2·0
	100

By expanding as described it would be altered as follows:

	Per cent.
Work indicated in cylinder	25·0
Heat lost to cylinder walls	51·0
Heat carried away by exhaust	22·0
Radiated loss, etc.	2·0
	100

The work done will be increased by diminishing the loss of heat with the exhaust gases, but the loss of heat to the cylinder walls will remain constant. This assumes, of course, that the increased time of expansion is balanced in loss to cylinder walls by more rapid rate of fall; if the piston velocity is not increased the result will not be quite so good. If, for instance, the piston velocity is constant, and the volume to surface ratio is constant, the expansion will only give results as follows:

Work indicated in cylinder	21·0
Heat lost to cylinder walls and radiated	66·5
Heat carried away by exhaust	12·5
	100·0

Expansion so arranged as to be equivalent to the same time of present piston stroke, 0·2 seconds, by increasing piston velocity and rearranging cooling surfaces, will give 25 per cent. of total heat in indicated work: if surfaces and piston speed remain unaltered, so that the time of exposure increases in same ratio as expansion, then 21 per cent. only will be attained. With proper expansion, the loss of heat by the exhaust gases discharging at a high temperature may be greatly diminished, and the efficiency would be increased, but the change would not affect the loss of heat to cylinder walls; it would even increase it.

How can this, the greatest loss in the gas engine, be reduced? The loss depends, as has already been stated, upon the ratio of surface to volume of gases exposed to cooling, upon the time of exposure, and upon the elevation of the temperature of the hot gas above the enclosing surfaces cooling it.

It is evident that as engines increase in power, the capacity of cylinders of similar proportions increase as the cube of the diameter, while the area of the enclosing cold surfaces increases as the square of the diameter. As engines of greater and greater power are constructed, the surface exposed in proportion to volume becomes less and less; the loss of heat from this cause will, therefore, diminish.

Increase in piston velocity will also diminish loss, by diminishing time of contact: 300 feet per minute is the usual speed at present, and it cannot be advantageously increased in small engines, as the reciprocations of the parts become too frequent for durability: but in large engines with diminishing reciprocation, the piston speed may be increased to 600 feet per minute, and still be within the limits practised in steam engines.

Increase in temperature of cylinder walls is also advantageous within certain limits. The author has found a difference of as much as 10 per cent. upon the consumption of gas of an Otto engine when at 17° C., and so hot that the water in the jacket was just short of boiling 96° C. It is probable that still higher temperature could be advantageously used, but there is a limit imposed both by theory and practice.

However, the cycle could be modified to permit the use of very hot walls, enclosing the gases at 500° C.

When all these precautions against loss are practised in large engines, and the heat loss is greatly reduced, another complication steps in, which modifies the theory of the engine very considerably. That complication is the property possessed by all explosive gaseous mixtures of suppressing part of their heat—the phenomenon of Dissociation, the 'Nachbrennen' of the Germans, or the apparent change of specific heat or continued combustion of the French and the English.

Although a gaseous explosion expanding in a cold cylinder behind a piston doing work very nearly follows the adiabatic line, yet if expanded under such circumstances that the loss of heat was greatly diminished, it would no longer do so.

In large engines the expansion curve is always above the adiabatic; in small engines it is below the adiabatic.

In fig. 53, diagram taken by Professor Thurston, if all loss of heat to the cylinder could have been prevented, the expanding line would have been an isothermal, the maximum temperature of 1657° would have been sustained to the end of the stroke, and the actual efficiency of the diagram would have been 0·40, that is, 40 per cent.

At the point 7 the temperature would be 1657°, and the gases would still contain 60 per cent. of all the heat given to them, and if expanded to atmosphere adiabatically, the combustion being supposed complete, then 13 per cent. would be added, making a total efficiency of 53 per cent.

If the loss of heat through the cylinder could be totally suppressed, the possible efficiency, taking into consideration the properties of explosive gases is 53 per cent. It is impossible to completely avoid loss to the cylinder, but it will doubtless be greatly reduced.

The united effect of expansion, greater piston speed and reduction of loss of heat to the cylinder by using hot liners, when carried out in an engine of considerable power, would cause the attainment of a practical heat efficiency of at least 40 per cent., and this without any great change in the construction of gas engines now made.

Now, how do these efficiencies compare with those of the steam engine? It is generally admitted that the best steam engines of considerable powers and of the latest type, when in ordinary work do not give an efficiency greater than 10 per cent., that is, they do not convert more than 10 per cent. of the heat given to the boiler in the form of fuel, into indicated work. In small engines of such powers as are comparable with the largest gas engines yet constructed, the results are not nearly so good, an efficiency of 4 per cent. being a good result.

The reader will remember that the term efficiency, as used in this work throughout, is defined to mean the proportion of heat converted into work, to total heat given to the heat engine.

Efficiency is often used in another sense, and considerable confusion has arisen because of its use in different senses by different writers. In comparing engines differing in their nature, the only standard of comparison possible is the total heat or total fuel given to each engine, and the proportion of total heat or total fuel which that engine can convert into work. The source of power is always combustion, and the temperature of combustion may always be supposed to be the superior limit of temperature whatever the working process, whether steam or air is the working fluid. From the fact of taking the total heat as the basis of comparison, the reader is not to infer that it is possible even in theory to convert all of it into work. Professor Osborne Reynolds, in a lecture before the Institution of Civil Engineers, stated that this seemed to be a belief popular among engineers ; the author does not think that this is so.

Certainly, the second law of Thermodynamics is not so widely understood among engineers as it should be, but still, few suppose that it is even theoretically possible to convert all the heat given to an engine into work.

In the discussion on the author's paper on 'The Theory of the Gas Engine,' at the Institution of Civil Engineers, considerable confusion arose from the term efficiency being used in different senses by different speakers. Professor Fleeming Jenkin in his lecture very clearly defines the different legitimate uses of the term.

Returning to the comparison of gas and steam engine heat efficiency, the 10 per cent. of the steam engine is probably very nearly as much as can be ever attained ; it may be exceeded by using high pressures and great expansion, but it will never be possible to attain anything like 20 per cent. The limits of temperature are such that if the steam cycle were perfect, only 32 per cent. of the whole heat could be converted into work ; at the boiler pressures and condenser temperatures used, the theoretical efficiency of the steam engine cycle is within 80 per cent. of the cycle of a perfect engine, that is, the efficiency theoretically possible is $32 \times 0{\cdot}8 = 25{\cdot}6$ per cent. In an experiment made by Messrs. B. Donkin & Co. on a 63 HP compound engine, the results as given by Professor Cotterill in his work on the steam engine are as follows :

	Per cent.
Absolute efficiency	11·1
Efficiency of a perfect engine	28·4
Relative efficiency	39·1

The engine received 100 heat units from the boiler as dry steam, and it gave 11·1 units as indicated work in the cylinder. With the pressures and temperatures given, the steam engine cycle, if perfectly carried out, falls short of the cycle of a perfect heat engine between the limits, so that 22·7 per cent. is the maximum efficiency which could be obtained, supposing no other loss than that due to the imperfection of the cycle. The cylinder losses, condensation, incomplete expansion and misapplication of heat, make the actual indicated efficiency 11·1 per cent., so that half has gone. The furnace loss diminishes the absolute efficiency to 9·2 per cent., and it is extremely improbable that improvement can ever increase this to 18 per cent., which is the indicated efficiency of the gas engine as at present.

It is impossible that the steam engine can ever offer an efficiency of 40 per cent., which is quite possible with the gas engine.

What remains to be done, then, in order to make the gas engine compete with steam for really large powers? At present the largest gas engines do not indicate more than 40 HP, and very few are in use so powerful.

The gas engine, although superior in efficiency as a heat engine to the steam engine, is not superior in economy except for small powers, where steam engines are very wasteful and the cost of attendance relatively great.

The unit of heat supplied in the form of coal gas is more costly than the unit of heat supplied in the form of coal. Gas producers are required which will convert the whole of the fuel into gas as readily as steam is produced, and with no greater loss of heat than a boiler has.

Mr. J. E. Dowson's producer is the only one at present in existence giving suitable gas, and it requires the special fuel anthracite.

The use of ordinary fuel has not yet succeeded.

A good gas producer, giving gas usable and free from tar, is much wanted.

But when all this is done, the gas engine remains in some respects inferior to the steam engine. It would then be a great advance in economy, as it is at present much superior as a heat engine, or machine for the conversion of heat into work. But mechanically it would still be inferior to steam.

As a piece of mechanism, the steam engine is almost perfect : it is started, stopped, and regulated in a very perfect manner. Its motion is, in good examples, almost perfectly uniform under variation of load, and but little fly-wheel power is required, because there is little or no negative work.

Its motion is perfectly under control.

The gas engine itself requires much improvement in this respect ; it is a comparatively inferior machine ; at best it receives only one impulse every revolution when at full power, and when under light loads only an occasional impulse.

Means must be found to make it double acting, and to diminish the power of the impulses instead of diminishing their frequency for governing.

Means must also be found to start and stop as in steam engines ; the present starting gear is a step in this direction, but requires development.

All this can and will be done ; it is a matter of time and patience. It can and will be made as mechanically perfect and controllable as the steam engine. Flame and explosion, seemingly so untameable and destructive, have been to a great extent tamed and harnessed in present engines. Experience is growing, by which it will be as easily and certainly directed in the cylinder of an engine as steam is at present. The furnace, at present separated from the engine, will be transferred to the engine itself, and the power required will be generated as required for each stroke, and the system of storing it up in enormous reservoirs—steam boilers—finally abandoned.

The masses of smoke polluting our atmosphere will be entirely abolished so far as motive power is concerned.

The author cannot do better in conclusion than quote the late Professor Fleeming Jenkin, expressing his belief in the future of this form of motor.

'Since that is the case now, and since theory shows that it is possible to increase the efficiency of the actual gas engine two or even threefold, then the conclusion seems irresistible, that gas engines will ultimately supplant the steam engine. The steam engine has been improved nearly as far as possible, but the internal-combustion gas engine can undoubtedly be greatly improved, and must command a brilliant future. I feel it a very great privilege to have been allowed to say this to you, and I say it with the strongest personal conviction.'

PART II.

GAS ENGINES PRODUCED SINCE 1886.

CHAPTER I.

GAS ENGINES GIVING AN IMPULSE FOR EVERY REVOLUTION.

THE first part of this work was published in 1886, and the account of the different engines described is accurate up to that date; the scientific part of the work, dealing with the thermodynamics of the gas engine, and the various causes of loss operating in working engines, is as true to-day as when written, and requires no modification.

The ten years elapsing between 1886 and the present year have, however, seen many important changes in details of construction, and a considerable advance has been made in the construction of large gas engines. Gas producers have been more extensively adopted; petroleum engines have been produced which are practically useful, although not quite so well understood as gas engines; very effective and simple starting gears have been invented and extensively applied; the slide valve igniters have been practically abandoned, and the hot tube igniters have taken their place; the compound principle has been advanced a stage; and generally the gas engine has been made as reliable in its action as any steam engine.

The Otto patent of 1876 (No. 2081) expired in 1890, and this event has had a most important effect on the gas engine from a commercial point of view; so many engineers now make Otto cycle engines that the selling price for any given power has fallen from 40 per cent. to 50 per cent. as compared with 1886 prices. So far this fall in prices has had one good effect, and has greatly increased the number of gas engines in use, by bringing the cost within the means of many small manufacturers formerly unable to stand the considerable first cost of a gas engine.

The lapse of the Otto master patent has, however, had another effect which may prove an obstacle in the development of the gas engine. In Britain the Otto cycle engine is now practically the only engine manufactured; the whole of the impulse-every-revolution engines have disappeared from the market; many are still in successful work, but their makers with wonderful unanimity have ceased their manufacture, and have generally taken to the construction of Otto engines. At the present time practically the whole of the engines manufactured and offered for sale in this country by engineers are engines operating on the Otto cycle, giving one impulse for every four single strokes of the piston.

This state of affairs offers emphatic testimony to the practical advantages of the Otto cycle, and in the author's opinion engineers are correct in considering the Otto cycle as likely to remain unrivalled for small and perhaps moderate power gas engines. For really large engines, however, it appears to him that the Otto cycle is inherently defective, and he still considers impulse every revolution or two impulses per revolution as much preferable, and as certain to prove the type of the future for really large power engines. It is therefore much to be regretted that for the present engineers have practically ceased their efforts in the direction of more frequent impulses, and have devoted themselves entirely to the development of the Otto type.

The following are the leading makers of Otto cycle gas engines in Britain:

Messrs. Crossley Bros., Limited, Manchester; Messrs. J. E. H. Andrew & Co., Limited, Reddish; Messrs. T. B. Barker & Co., Birmingham; Messrs. Tangyes, Limited, Birmingham; Messrs. Dick, Kerr & Co., Limited, Kilmarnock; Messrs. Robey & Co., Limited, Lincoln; Messrs. Fielding & Platt, Gloucester; and Messrs. P. Burt & Co., Glasgow.

There are many other engineers who manufacture good Otto cycle engines, but a description of engines by several of these makers will put the reader in full possession of the leading points of recent gas-engine practice. Before beginning the Otto cycle engines, however, it is advisable to consider shortly the position of impulse-every-revolution engines from 1886.

Atkinson's 'Cycle' Gas Engine.—The most important of the engines giving an impulse every revolution produced since the year 1886, was undoubtedly the engine called by Mr. Atkinson the 'Cycle.' At page 197 of this work will be found a description of Atkinson's Differential Gas Engine, in which a most ingenious attempt was made to obtain greater expansion than was given in Otto engines. To a certain extent this attempt was successful, and the combustible mixture was expanded after explosion to a volume considerably greater than the volume existing before compression. Considerable economy was obtained in the engine, but certain practical difficulties intervened which caused Mr. Atkinson to invent another engine quite as ingenious, but having one piston instead of two.

The engine is shown in longitudinal section at fig. 102, in plan at fig. 103, and at fig. 104 at 1, 2, 3 and 4 are given the four principal positions of the linkage and piston, carrying into effect the operations of the engine. The piston makes two out and two in strokes for every explosion given, and in this feature the engine resembles the Otto, but here the resemblance ends. The piston is so coupled to the crank shaft that the whole four single strokes are performed during one revolution; and, moreover, the four strokes differ in length and range in the cylinder, so that while on one in-stroke the piston proceeds almost entirely to the end of the cylinder to sweep out practically the whole of the products of combustion, on the next in-stroke it stops short and leaves a considerable compression space; on one out-stroke also a short distance is traversed, and on the other out-stroke a longer stroke is made to obtain greater expansion. That is, during the exhausting in-stroke the piston moves close up to the cylinder cover; during the compressing in-stroke it leaves a considerable space; during the expanding out-stroke after explosion the piston makes its longest sweep; and during the charging out-stroke it makes a shorter sweep.

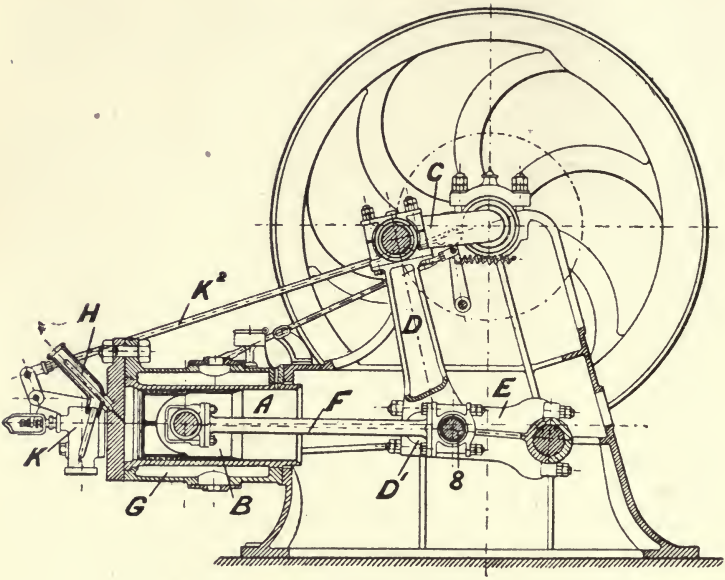

FIG. 102.—Atkinson Cycle Engine (longitudinal section).

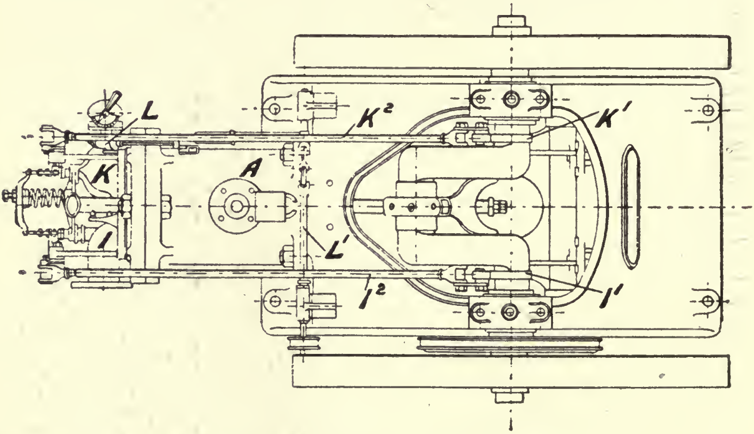

FIG. 103.—Atkinson Cycle Engine (plan).

By these variations in length of stroke and position of sweep in the cylinder, the piston not only sweeps out the whole of the products of combustion, but it also expands the burned gases beyond the volume existing before compression. The linkage invented by Mr. Atkinson to perform these operations is extremely simple and ingenious, and will be best followed by an examination of the diagrammatic illustration 1, 2, 3 and 4 of fig. 104.

The cylinder A contains the piston B, which piston is connected to the crank C, which rotates in the direction of the arrow 5; the connecting rod D from the crank C connects to a toggle lever E, pivoting from the fixed centre 6, at the centre 7; the connecting rod D carries a short lever D^1 rigidly attached to it and carrying a pin or centre 8, and to this pin or centre 8 is connected the second connecting rod or toggle link F. By the rotation of the crank C, the toggle lever E is constrained to oscillate on its pivoting point or centre 6, between the limits shown by the dotted lines 9 and 10. The centre 7 of the connecting rod D and lever E thus describes the arc shown by the dotted line between the lines 9 and 10, and if the rod F were connected to the centre 7 the piston B would make two out and two in-strokes for every revolution of the crank C, and the two strokes would be of equal or unequal length depending on the equal or unequal oscillation of the toggle lever E about a central position with regard to the connecting rod F, but in this case the in-stroke of the piston B would always terminate at the same point, and so one stroke could not be arranged to clear out the exhaust gases, while another left the required compression space. To produce this desired variation, Mr. Atkinson provides the short lever D^1 which oscillates about the centre 7, describing an arc between the dotted lines 11 and 12 about the centre line of the lever E. The position of the centre 8 relative to the centre line of E depends on the position of the crank C in the crank circle, and the angle between the lines 11 and 12 depends upon the relative length of the connecting rod D, as compared with the diameter of the circle described by the crank C, and also the angle between the lines 9 and 10.

In diagram 1 (fig. 104) the piston B is at its extreme in

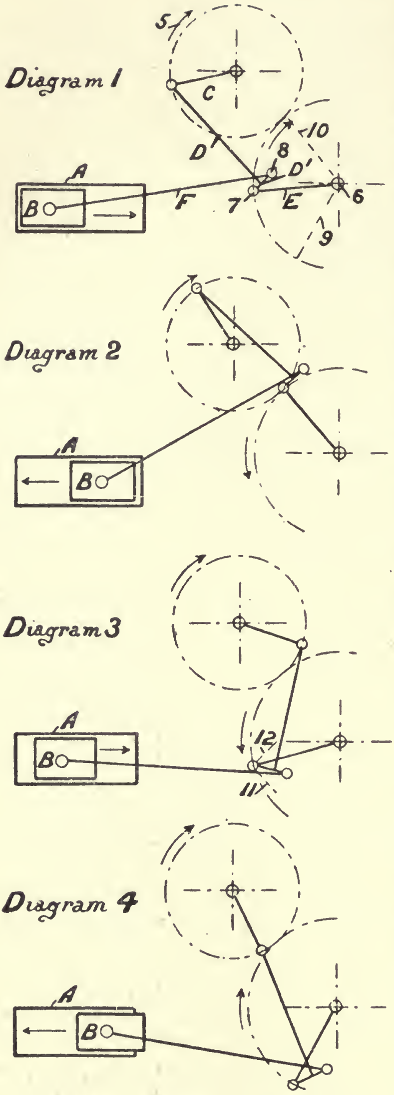

FIG. 104.—Atkinson Cycle Engine (four positions of linkage).

position, and all products of combustion have been expelled; the crank C rotates in the direction of the arrow 5, and in diagram 2 the piston B has made its out charging stroke, taking into the cylinder a charge of gas and air at atmospheric pressure. It is to be observed that in diagram 2 the piston B, although at the end of its charging stroke, still remains within the cylinder A; in diagram 3 the crank C has still further rotated, and now the piston B has attained the extreme in-end of its compression stroke, the mixed gases are fully compressed and ready for explosion, the explosion takes place at the position shown in diagram 3, and the crank C continuing to rotate, the parts at the extreme outward position of the piston B after expanding the gases assume the position of diagram 4. In this latter position it will be observed that the piston B has travelled somewhat out of the cylinder A, that is it has made a longer stroke than the compression stroke. The stroke made in passing from the position of diagram 4 to that of diagram 1 is the longest of all strokes, as in it the piston passes from the extreme out-position of expansion right into the cylinder cover, and sweeps out all the products of combustion. The next out-stroke is shorter, taking in the charge; the following in-stroke is shorter still, compressing the charge and leaving a compression space; then follows the longest out-stroke, that of expanding the gases after explosion. A comparison of diagrams 1 and 3 shows the reason of the difference of position of the piston B; although in both cases the toggle lever E is in practically the same position, in 1 the crank C is on one side of the crank circle, while in 2 it is on the other side, so that the lever D is thrown from the top of the centre line of the toggle lever E to a position under it, but the effect of the movement is to draw the piston forward from the cylinder cover. By studying the positions of the lever D and the positions of the toggle lever E from the diagrams, the action will be readily followed.

In the engine rated at 6 HP nominal, the cylinder is 9·5 ins. diameter, and the four successive strokes are as follows:

1st (out-stroke) Suction of gas and air charge .	6·33 ins.
2nd (in-stroke) Compression of charge . . .	5·03 ins.
3rd (out-stroke) Working expansion after explosion	11·13 ins.
4th (in-stroke) Discharging exhaust . . .	12·43 ins.

The construction of the 6 HP engine is shown at figs. 102 and 103 in longitudinal section and elevation; A is the cylinder; B the piston; C the crank; D the connecting rod to the toggle lever; E the toggle lever; D^1 the short connecting rod lever; F the connecting rod between the piston and the pin 8 on the lever D^1; G is the water jacket surrounding the cylinder and fitted with the usual openings for pipe connections to the tank; H is an incandescent igniting tube, open to the cylinder, and arranged to operate without timing valve in a manner to be described later on; I is the exhaust valve; and K the gas and air inlet valve (shown in plan, fig. 103); L is the gas valve. All three valves are of the usual conical-seated lift type held on their seats by springs, and they are operated from the crank shaft by cams I^1 K^1, and rods I^2 K^2, in the usual way. The governor is indicated at L^1, and it is of the rotating centrifugal type; it acts on a rod connecting between the actuating cam and the gas valve stem to cause the end of the rod to be withdrawn, and the gas valve stem missed, so leaving the gas valve closed for a stroke or a number of strokes. This also is a common device.

Diagrams and Gas Consumption.—A test of the first 'Cycle" engine constructed was made in April 1887 by Professor W. C. Unwin, F.R.S., for the British Gas Engine Co., Ltd., the makers of the engine in London.

The engine was rated at 4 HP nominal, the diameter of the cylinder 7·5 ins. and the expansion or working stroke 9·25 ins.

The leading results obtained were as follows :

Indicated Horse Power	5·563
Brake ,, ,, ...	4·889
Gas consumed in one hour	100 cb. ft.
Gas consumption per IHP per hour . . .	19·78 cb. ft.
Gas consumption per brake HP per hour . .	22·50 cb. ft.
Efficiency of mechanism	87·9 per cent.
Heating value of gas in lbs. degree C° per cb. ft. .	349·3

Professor Unwin accounts for every 100 heat units used by the engine as follows :

Accounted for in indicator diagram	20·62
Given to jacket water	19·37
Difference, exhaust gases, radiation, &c. . . .	60·1
	100·00

An indicator diagram taken during the test is given at fig. 105, and in dotted lines on the same diagram is one taken by Dr. Slaby from a 4 HP Otto engine. This latter diagram was taken by Dr. Slaby during a test referred to at page 170 of this work.

The ratio of the expansion in the Otto engine was 2·7 as compared with 3·75 in Atkinson's ; that is, in the Otto engine, the volume of the compression space being taken as 1, then the total volume behind the piston, when the piston was full out, was 2·7 volumes ; the sweep of the piston was therefore 1·7 times the volume of the compression space ; in the Atkinson engine, the volume of the compression space being 1, the volume swept by the piston during expansion was 2·75; the gases contained in the compression space were thus expanded from 1 volume to 3·75 volumes. In the author's opinion, Professor Unwin's diagram fig. 105 is hardly fair to the Otto engine, as it appears to somewhat exaggerate the amount of expansion obtained in the cycle engine as compared with the Otto, and the diagram should be so corrected as to allow for the differing combustion spaces. The expansion, however, in the Atkinson engine is doubtless much greater than in the Otto, and accordingly the gases fall to a pressure of about 15 lbs. per square inch before the exhaust valve is opened.

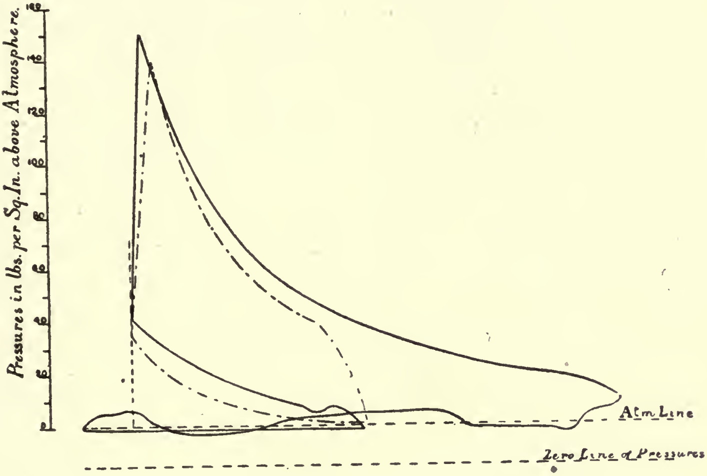

FIG. 105.—Atkinson Cycle Engine (Prof. Unwin's diagram).

An important series of tests were made by judges appointed by the Society of Arts, Dr. John Hopkinson, F.R.S., Professor A. B. W. Kennedy, F.R.S., and Mr. Beauchamp Tower, at South Kensington in 1888, of the Crossley, Griffin, and 'Cycle' gas engines, from which it appeared that the Atkinson 'Cycle' gave distinctly the lowest gas consumption. The principal results obtained were as follows:

SOCIETY OF ARTS TRIAL.—ATKINSON ENGINE.

Indicated Horse Power	11·15
Brake ,, ,, ...	9·48
Gas consumed in cylinder in one hour . .	209·8 cb. ft.
Gas consumed for ignition in one hour . .	4·5 cb. ft.
Gas consumption per IHP per hour total . .	19·22 cb. ft.
Gas consumption per brake HP per hour total .	22·61 cb. ft.
Efficiency of mechanism	85 per cent.
Heating value of gas in lb. degree C., per cb. ft.	351·6
Revolutions per minute	131·1
Explosions per minute	121·6
Mean initial pressure, above atmospheric . .	166 lbs. per sq. in.
Mean effective pressure	46·07 lbs. per sq. in.
Cooling water per hour	680 lbs.
Rise of temperature cooling water . . .	50° F.

The engine was rated at 6 HP nominal; the cylinder was 9·5 inches diameter; suction stroke 6·33 inches; compression stroke 5·03 inches; working or expansion stroke 11·13 inches; and exhaust stroke 12·43 inches.

The test giving these figures was of 6 hours' duration, and the engine was continually loaded to full power; indicator diagrams were taken every 15 minutes, and diagrams were also taken with light springs to find the power absorbed in the pumping and exhausting strokes. Fig. 106 is a diagram taken during this trial, and the leading particulars are marked upon it.

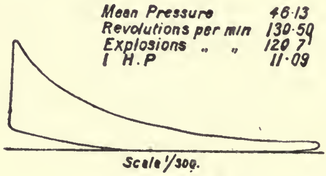

FIG. 106.—Atkinson Cycle Engine (Society of Arts diagram).

Fig. 107 shows an ideal diagram superposed upon an actual diagram; the ideal diagram is the one assumed by the judges in the Society of Arts trial as fairly corresponding with the actual conditions, lines have been straightened out, and curves made to follow a different law in order to obtain approximately correct figures for temperatures and heat volumes. Standard points A, B, C, D, E, F, and G have been taken, and the volumes existing behind the piston accurately measured at the various points. The point A, for example, represents the farthest in point when the piston is full back, discharging the products of combustion. The piston moves out from A to B, taking in the charge of gas and air ; the piston then returns from B to C, compressing the charge to the pressure and volume indicated. The explosion then occurs, and during the rise of pressure and temperature the piston is supposed to be stationary, that is the volume behind the piston is the same when the pressure attains its maximum as indicated at D as at the point C, so that the heat added by the explosion is added when the gases are at constant volume ; from D to E the piston is supposed to move out while the pressure remains constant, that is the heat added from D to E is added at constant pressure. The hot gases are supposed to expand from E to F, following truly a definite curve in which $p v^n =$ constant. In the diagram n is taken as 1·264, and the curve E F has the equation $p v^{1 \cdot 264} =$ constant.

The value of n for the compression curve is 1·205, and assuming the specific heat of the charge the same as that of air, which assumption is very nearly true, then the value of n should be 1·408 ; the curve of compression in this diagram is therefore below the adiabatic, and the charge is losing heat to the sides of the cylinder during compression.

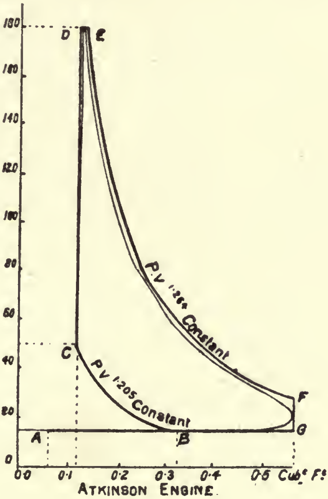

FIG. 107.—Atkinson Cycle Engine (Society of Arts actual and ideal diagram).

The value of n for the expansion line E F is 1·264, which proves the curve to be much flatter than would have been given by the adiabatic expansion of a volume of air heated to the maximum temperature at E. The ratio of the specific heats of the expanding charge at constant pressure and constant volume has been calculated by the judges as 1·376 on the assumption of the presence in the charge of the products of complete combustion.

This in the author's opinion is a quite erroneous assumption, as only about one-half of the total heat of the gas present is accounted for by the maximum temperature, so that the specific heat could not change to the extent assumed; the value of *n*, however, for the expanding charge is somewhere between 1·376 and 1·408, so that the error introduced is not great.

The following table gives the pressure, volumes, and temperature at the various points of the ideal diagram, fig. 107:

	Pressure, lbs. per sq. in. absolute	Volume in cub. feet	Temperature, degrees C.
A	14·87	0·064	—
B	14·87	0·324	46·6 C.
C	50·30	0·118	126·4 C.
D	180·90	0·118	1182·5 C.
E	180·90	0·135	1388·1 C.
F	29·00	0·575	849·2 C.
G	14·87	0·575	849·2 C.

The report gives full calculations of heating value of the gas used, specific heat of products of combustion, and many other details; several of these matters will be more fully discussed later on, in comparing the results obtained from different engines.

It is desirable to note here, however, that the ratio of air to gas entering the cylinder is calculated as 1 volume gas to 9·33 volumes of air. It is unfortunate that the ratio was not determined by independent measurement of both gas and air by separate meters, as was done in Professor R. H. Thurston's American test, described on page 175 of this work. Comparing the proportions of coal gas and air plus other gases present, it is interesting to note that in Thurston's experiments the entering charge contained 1 volume of gas to 7 volumes of air, but when mixed with the products of combustion in the compression space the average composition was 1 volume coal gas to 9·1 volumes of other gases. The composition of the mixture in the two cases thus appears to be practically the same. In the Otto engine, however, the temperature of the charge was much higher before compression than in the Atkinson engine, as was also the temperature of compression; the maximum temperature of the explosion would appear to be higher in consequence.

The report gives the heat account of the foregoing test as follows:

	Per cent.
Heat turned into work as shown by indicator diagrams . .	22·8
Heat rejected in jacket water	27·0
Heat rejected in exhaust, lost by imperfect combustion, and otherwise unaccounted for	50·2
	100·0

This gas consumption of 19·22 cub. ft. per IHP per hour, giving an efficiency of 22·8 per cent., was the best result so far as economy was concerned up to the date of the trial, September 1888.

General Remarks.—The Atkinson 'Cycle' engine was manufactured and sold by the British Gas Engine Company, London, from 1887 to the beginning of 1893, and during that period the author is informed that somewhat over 1,000 gas engines were sold; the engine, however, notwithstanding the great ingenuity of its construction and its unrivalled economy of gas consumption, never became really popular. Difficulties were experienced with the linkage, which had at least five working pins as compared with the two pins of the ordinary connecting rod, and these difficulties ultimately led the inventor to return to an engine of less uncommon construction, having only the ordinary crank and connecting rod.

Mr. Atkinson, however, in his 'Cycle' engine proved absolutely the possibility of obtaining great economy in gas consumption by expanding the gases after explosion to a volume much greater than existed before compression. By his ingenious linkage he caused one piston to perform four strokes within one revolution of the crank shaft; he also proved conclusively a point for which the present author has long contended—namely, that better results are to be obtained in a gas engine by expelling the whole of the products of combustion from the cylinder than by retaining them.

The 'Cycle' engine has a very high piston speed for a given number of revolutions of the crank shaft, as each complete stroke of the piston was accomplished in about one-quarter revolution, as will be clearly seen by inspecting the diagram, fig. 104. This high piston speed, although advantageous so far as gas consumption was concerned, must have been detrimental to the smooth and long-continued satisfactory working of the engine, as the movements of the piston rods and links were of a kind which could not be conveniently balanced.

The engine was made in sizes up to about 30 HP brake, and the author understands that one 100 HP engine was constructed, but he is informed that this size was never placed on the market.

Atkinson's 'Utilité' Gas Engine.—This engine was invented by Mr. Atkinson with the object of retaining all the economy of the 'Cycle' gas engine, while returning to the ordinary mechanical arrangement of piston, crank, and connecting rod, which has had the sanction of engineers and the public, inasmuch as it is practically the only construction adopted in steam engines.

The linkage of the 'Cycle' engine, although most admirable from an experimental point of view, was not such as an engineer would care to adopt in a high-speed or even a high-power engine, and although it served its purpose by proving to demonstration many interesting points, yet the present author was much pleased to see Mr. Atkinson depart from it.

The 'Utilité' engine never attained any real commercial importance, as the British Gas Engine Company gave up business shortly after they had begun its manufacture. The Otto cycle had just then taken so firm a hold upon the public, that it appeared useless to sue for popular favour with any impulse-every-revolution engine, however good.

The engine is of the greatest interest to engineers, however, as it proves how great economy can be obtained with an impulse-every-revolution engine.

The 'Utilité' engine resembles in many points the Clerk and Robson engines. One side of the piston operates as a pump and pumps air into a chamber at low pressure, from which it flows through a valve into the power side of the cylinder, and displaces the exhaust gases before it through a port or ports uncovered by the forward movement of the piston. The cylinder thus contains a quantity of air, which is compressed by the piston on its return stroke, and charged during compression with a charge of gas and air mixture, the gas, however, in the mixture being present in proportion too great to be explosive.

The trunk piston operates in the cylinder connected to the crank shaft by the connecting rod. The whole front of the cylinder and the rod and crank shaft are inclosed within a casing, and a back cover is arranged to contain the compression or explosion space. A chamber or casing connects by a pipe with an automatic inlet valve, and another automatic inlet valve admits air to the casing or chamber. A pump is operated by an eccentric on the crank shaft, and it takes in a charge of gas and air by way of a valve and the gas cock, and discharges the charge at the proper time by way of the valve. The piston overruns the exhaust port at about half-forward stroke, and the port is controlled by a piston valve, so that, although the piston uncovers the exhaust port at mid-stroke, yet the exhaust gases are not discharged to the atmosphere till the exhaust valve is opened at the termination of the out-stroke.

The action of the engine is as follows : On the in-stroke the piston draws into the chamber a charge of pure air by way of the air valve, and on the out-stroke it compresses this charge to a pressure of about 5 lbs. per square inch. When the piston is full forward, then the exhaust valve is opened, and the pressure within the working cylinder falls to atmosphere and the pressure in the chamber lifts the charge valve, and air rushes by way of a pipe through the charge valve and enters the cylinder, clearing before it the exhaust gases through the exhaust port and valve, which is then open. The piston then returns, discharging the rest of the exhaust gases through the port until the piston crosses that port, when it begins to compress the air charge. Just as the port is closed, the gas and air pump begins to discharge its contents, a mixture of air and gas, into the combustion space of the cylinder by way of the gas and air valve. The gas and air mixture in the pump has too little air to make the charge explosive, and so it is impossible for the mixture to ignite in the pump. The gas being already mixed with air only requires the addition of a further quantity to become explosive, so that by the time the charge is compressed the gas is almost uniformly mixed with the air, and is in a state to produce a powerful explosion. The mixture is expanded by this arrangement to a volume after explosion and expansion much greater than the volume existing before compression, and so considerable advantage is obtained in economy.

The cycle of operation of this engine is very similar to that of previous engines, but Mr. Atkinson, by his thorough knowledge of gas engine detail, has obtained results, he informed the author, which have surpassed those previously obtained with the cycle engine. The author regrets that he has been unable to obtain authenticated tests and diagrams of this engine.

Other Impulse-Every-Revolution Engines.—The other impulse-every-revolution engines which have appeared since 1886 are: The Campbell Gas Engine, manufactured by the Campbell Gas Engine Co., Engineers, Halifax; the Midland Gas Engine, made by Messrs. John Taylor & Co., Nottingham; the Trent Gas Engine, manufactured by the Trent Gas Engine Co., Nottingham; the Day Gas Engine, constructed by Messrs. Day & Co., of Bath; and the Fawcett Engine, constructed by Messrs. Fawcett, Preston & Co., Liverpool.

The 'Campbell Gas Engine' follows the cycle of operations first adopted by Clerk, and described at page 184 of this work. It has two cylinders, respectively pump and motor, driven from cranks placed at almost right angles to each other, the pump crank leading. The pump takes in a charge of gas and air, and the motor piston overruns a port in the side of the cylinder at the out-end of its stroke to discharge the exhaust gases. When the pressure in the motor cylinder has fallen to atmosphere, the pump forces its charge into the back cover of the motor cylinder through a check valve, displacing before it the products of combustion through an exhaust port; the motor piston then returns, compressing the contents of the cylinder into the compression space. The charge is then fired and the piston performs its working stroke. This is the Clerk cycle.

The Campbell engine, however, differs in detail from the Clerk engine to some extent.

A hot tube igniter is used, and a vibrating pendulum governor has been applied.

The Midland Gas Engine also operates on the Clerk cycle. An ignition tube is used, and governing is performed by centrifugal governor.

The Trent Gas Engine is the invention of Mr. Richard Simon of Nottingham, and in it a trunk piston of two diameters is caused to perform the combined operations of working and pump pistons. Fig. 110 is a vertical section through the combustion or compression space, which in this engine is separate from the cylinder proper.

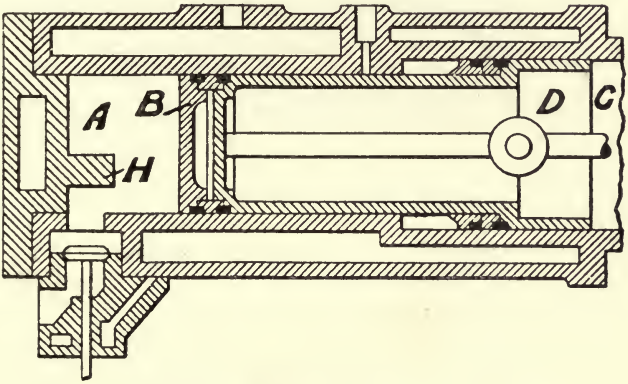

FIG. 108.—Trent Gas Engine (vertical section of cylinder).

Fig. 108 is a vertical section through the cylinder; fig. 109 is a horizontal section also through the cylinder, showing cylinder and combustion space with the piston removed; and fig. 110 is a vertical section through the combustion space. The cylinder has two diameters A and C, and in it fits a trunk piston B D; the smaller diameter B forms the motor or working piston, and the larger diameter D forms the pump piston; the pump cylinder being formed by the annulus around the trunk piston B. Both pistons B and D are thus operated together from a crank shaft by means of one connecting rod. M is the explosion chamber, and there are three main valves; E the inlet valve to the pump; O the discharge valve from the pump to the compression space M; and R the exhaust valve. S is the timing valve opening to the hot tube. When the piston B D makes its out-stroke, gas and air mixture is drawn into the annular space surrounding the trunk

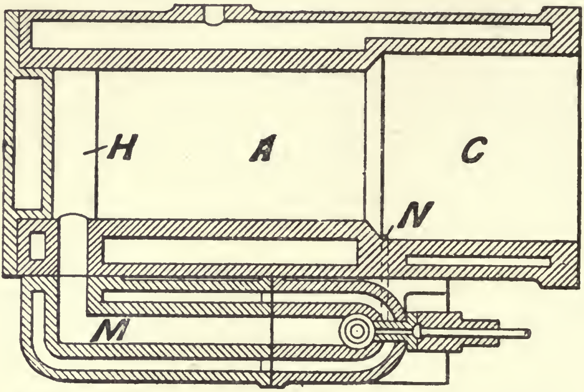

FIG. 109.—Trent Gas Engine (horizontal section of cylinder).

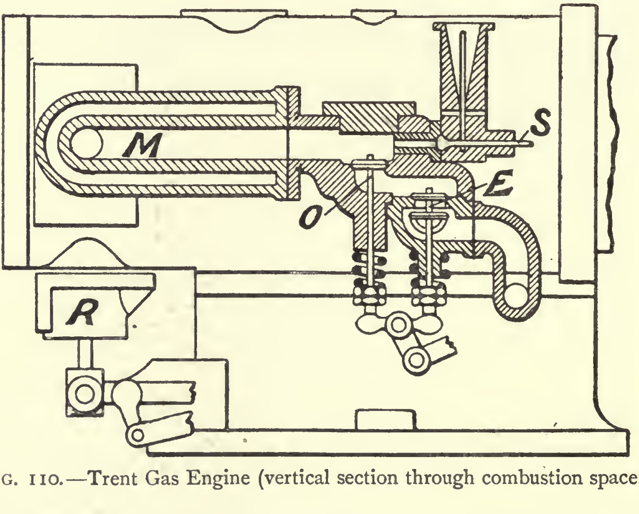

FIG. 110.—Trent Gas Engine (vertical section through combustion space).

piston B through the charge inlet valve E. On the in-stroke (the valve being closed mechanically) the mixture of gas and air is forced from the pump cylinder through the valve O, also operated mechanically into the combustion chamber M, and partly into the cylinder A, where it assists to displace the exhaust gases from the cylinder through the exhaust valve R. The horizontal rib or partition H prevents the direct flow of the entering charge to the exhaust valve R. At a certain point of the return stroke, so arranged as to prevent or minimise loss of charge by way of the exhaust valve R with the exhaust gases, the exhaust valve is closed and the pump piston continues to force mixture into the space M while the piston B compresses the charge in the cylinder; both pistons B D thus compress the charge, and at the in-end of the stroke, just after the valve O has been closed, the valve S is opened and the compressed charge is fired. The piston is forced out under the resulting pressure; the return stroke is performed by the energy of the fly wheel.

Diagrams and Gas Consumption.—From tests published by the Trent Gas Engine Co. as made by Mr. F. L. Guilford, of Messrs. G. R. Cowen & Co., Engineers, Nottingham, it appears that an engine rated at 4 HP nominal gave 10·2 IHP at 174 revolutions, but the brake HP was only 6·4 horse. The gas consumption was 180 ft. per hour.

FIG. 111.—Trent Gas Engine (diagram from power cylinder).

The enormous difference between the brake power and the indicated appears to the author to point to an omission on the part of the experimenter; the mechanical efficiency could not have been so low as 63 per cent.; the pump diagram cannot have been deducted from the motor diagram.

Fig. 111 is a diagram taken from the power cylinder of a 4 HP engine; it shows a compression pressure of 36 lbs. per square inch above atmosphere, with a maximum pressure after ignition of only 84 lbs. above atmosphere. The gases are expanded down to about 15 lbs. per square inch before discharge. This diagram proves conclusively that a large proportion of exhaust gases remained in the engine cylinder unexpelled. The rapidity of the ignition also shows that the combustion space M was filled with rich mixture.

The average available pressure cannot be obtained from this diagram in the absence of the pump diagram.

General Remarks.—This type of engine has very grave disadvantages, low average available pressure, large cooling surfaces, large volumes of exhaust products remaining in the charge, and consequent liability to back ignition if any attempt is made to use high compression; from these difficulties it follows that no great economy in gas consumption can be obtained.

The engine was manufactured for some years, but in 1894 the Company ceased business, and the engine does not now appear to be manufactured.

The Day Gas Engine.—This engine uses the same cycle of operations for charging the working cylinder as was adopted in the Tangye-Robson gas engine, and also in the Stockport engine, described in pages 195 and 197 of this work, but the inventor ingeniously dispenses with all valves and valve gear such as cams or eccentrics.

The engine in one form may be described as valveless, and its only moving parts are, piston, connecting rod and crank shaft; there is absolutely no valve used except a governor valve. Fig. 112 is a sectional elevation of one form of the engine, which is of the vertical inverted cylinder class, having the power cylinder A overhead.

The piston B operates the crank shaft D by means of the piston rod C. The crank shaft operates in a closed chamber E, which chamber serves as a reservoir for gas and air mixture. Three ports are arranged in the side of the cylinder respectively, F, G, H;

F is the charge inlet port admitting the charge to the cylinder, G is the exhaust port allowing the discharge of the exhaust gases from the cylinder, and H is the air inlet port to permit of the admission of air from the external atmosphere. The charge inlet port F communicates with the charge chamber E, and opens to the cylinder A opposed by the lip or projection I on the piston B. The exhaust port G connects by the pipe G¹ to the exhaust chamber G² of usual construction, and the chamber G² discharges to the atmosphere by the pipe G³. The air inlet port H connects by pipe H¹ to the base of the engine K, so as to quieten the air inlet.

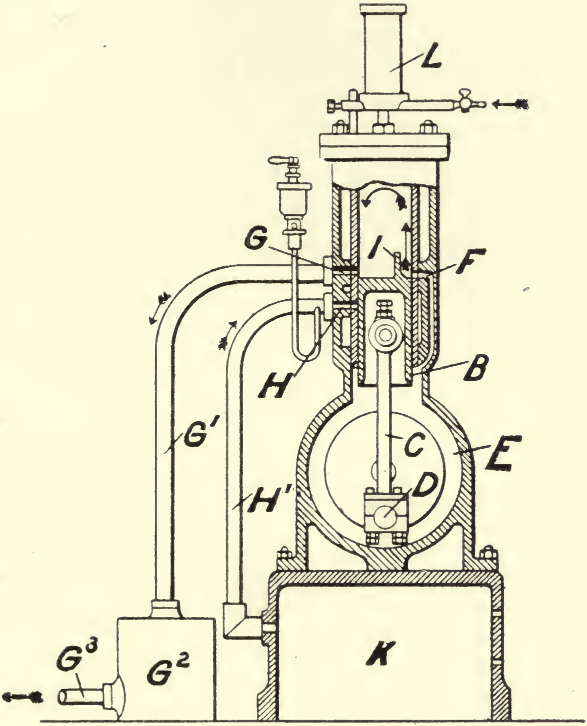

FIG. 112.—Day Gas Engine (vertical section).

The action is as follows. On the up-stroke of the piston B the pressure of the gases in the chamber E is reduced to about 3 or 4 lbs. below atmosphere; at or near the end of the up-stroke the lower edge of the piston uncovers the air inlet port H, and air rushes into the chamber to bring the pressure up to atmosphere; gas is also admitted from the separate governor valve referred to, so that the chamber E becomes charged with a mixture of gas and air. On the down-stroke of the piston B the contents of the chamber E are compressed to 3 or 4 lbs. above atmosphere, and at the termination of the down-stroke the port F is uncovered as shown in fig. 112. The exhaust port G has been crossed by the piston B somewhat earlier in the down-stroke, sufficiently early to allow the hot gases from the previous explosion to discharge to atmospheric pressure before the port F is opened. The charge then flows from the port F under slight pressure, strikes against the lip or baffle plate or projection I, and is deflected as shown by the arrows so that it flows in a stream to the end of the cylinder, then turns and fills the cylinder, expelling the exhaust gases by the port F. The piston B then returns on its up stroke, and compresses the charge into a space at the end of the cylinder to a pressure of about 50 lbs. per square inch above atmosphere. The hot tube L then ignites the compressed charge, timing the explosion by the position of the incandescent part in a manner which will be explained more fully later on. The piston then makes its downward stroke under the pressure of the explosion. By these operations an impulse is obtained at every revolution, as in the Clerk, Robson, and Stockport engines.

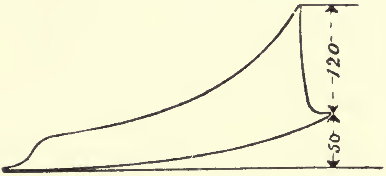

FIG. 113.—Day Gas Engine (diagram).

Loss of power is caused by the absence of an inlet suction valve to the space E, and in later engines a suction valve is provided.

This Day engine has the peculiarity, that it can be run in either direction; this is possible because of the absence of timing valves or valve gear operated from the crank shaft.

Diagrams and Gas Consumption.—Fig. 113 is an indicator diagram from this type of engine rated at 1 HP nominal. The diagram shows an indicated power of 3·3 horse at 180 revolutions per minute; the cylinder is 4·5 ins. diameter and 7½ ins. stroke. The author has not obtained the gas consumption, but this seems no good reason why the results should be better than those obtained with Tangyes' Robson gas engine. That engine gave for the small powers a gas consumption of 40 cubic feet per brake HP with an average available pressure of about 45 lbs. per square inch. The diagram given shows an average pressure of about 45 lbs. per square inch, and is probably lower, as allowance should be made for the work of charging.

General Remarks.—This engine appears to be the only remaining impulse-every-revolution engine now in the market in this country, and Messrs. Day & Co. are to be congratulated on their courage in adhering to the impulse-every-revolution type, and withstanding the temptation to desert and join the makers of Otto cycle engines.

The author wishes Messrs. Day & Co. every success, but he is of opinion that further modification is required if results are to be obtained superior to the older Clerk, Robson, and Stockport engines.

The Fawcett Gas Engine was manufactured by Messrs. Fawcett, Preston & Co., of Liverpool, and gave very fair results; it does not now, however, occupy any prominent position in the market. It is the invention of Mr. Beechy, and like the Clerk, Robson, and Stockport engines, it gives an explosion impulse at every revolution of the crank shaft.

Fig. 114 is a sectional elevation of the engine; fig. 115 is a sectional plan of explosion chamber and valves.

The motor cylinder A is horizontal, and under it is arranged the pump cylinder B inclined towards the crank centre. The motor piston A^1 connects to the crank pin C by the connecting rod D, and the pump piston B^1 connects to a pin carried by the connecting rod D by the lower connecting rod E. The effect so far as the movement of the piston B^1 is concerned is practically the same as if the rod E were also connected to the crank pin C. The piston B[1] thus reaches the in-end of its stroke a little before the piston A[1], when the engine rotates in the direction of the arrow shown in fig. 114. The piston valve F, fig. 115, is operated from the crank shaft by an eccentric, and it serves to control the admission of gas and air to the pump cylinder B, and the discharge from the said cylinder to the motor cylinder A; it also controls the admission of the compressed charge to the igniting tube K. A conical seat valve G, shown in dotted lines at fig. 114, controls the exhaust port H placed about the middle of the cylinder, and the valve is actuated by a bell-crank lever I from a cam or eccentric on the crank shaft. The action is as follows: The piston valve F uncovers the port L leading by the passage L[1] to the pump cylinder, the pump piston B[1] then moves forward drawing in a charge of gas and air, air by way of the pipe M, and gas by way of the annular port N, and the perforations or holes N[1]. When the pump piston has completed its outstroke the piston valve F closes the port L, and opens by way of the annular space between the two piston ends of the valve to the port O, which port communicates with the combustion space A[2] and cylinder A.

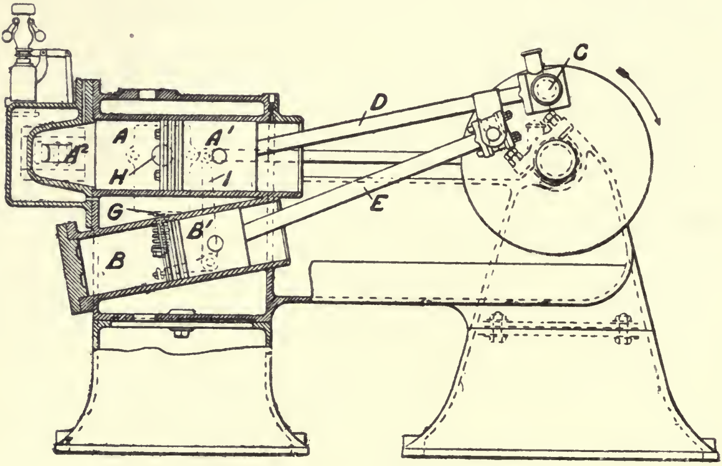

FIG. 114.—Fawcett Gas Engine (vertical section).

The piston A^1 is then on its instroke, together with the piston B^1, and the exhaust valve G is held open so that the exhaust gases discharge into the atmosphere, and some of the charge enters from the pump and assists to displace them. When the piston A^1 has crossed the exhaust port H, the greater part of the burned gases have been discharged, and part of the pump charge has been forced from the cylinder B through the passage L^1 port L, and port O into the space A^2; the continued movement of the piston forces a further part of the charge into the working cylinder while compression is being caused by both pistons. When the piston B^1 arrives at the in-end of its stroke the piston valve moves to close the port L, as shown in fig. 115, and the piston A^1 further compresses the charge. The continued movement of the piston valve F opens the incandescent tube K, and ignition takes place,

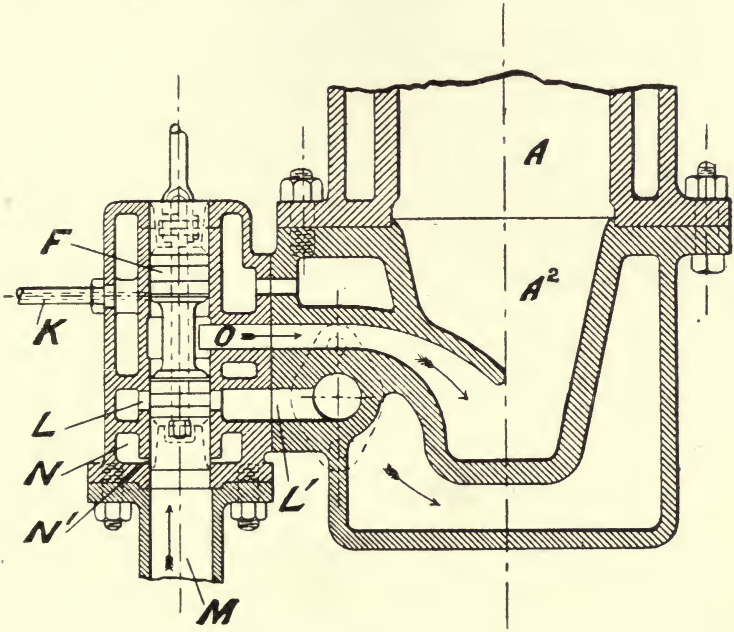

FIG. 115.—Fawcett Gas Engine (sectional plan of combustion chamber).

driving the piston A^1 on its working stroke. The charge is expanded to the end of the stroke, and the exhaust valve is opened for the return. By this arrangement an impulse is secured at every revolution of the engine.

Diagrams and Gas Consumption.—Experiments on the engine were made by Mr. T. L. Miller in 1890, from which it appears that in an engine indicating 11·49 HP at 150·8 revolutions per minute, 8·52 BHP was obtained with a gas consumption of 18·4 cb. ft. per IHP per hour and 24·74 cb. ft. per BHP per hour. The test was made with Liverpool gas, which evolves 399·6 lbs. Centigrade heat units per cb. ft. at 17° C., or heat equivalent to 555,490 ft. lbs. per cb. ft. If all the heat of the gas could be converted into mechanical work 3·564 cb. ft. would give 1 IHP for an hour. The absolute indicated efficiency of the engine is therefore $\frac{3{\cdot}564 \times 100}{18{\cdot}4} = 19{\cdot}3$ per cent.

General Remarks.—This engine closely resembles the Clerk type of engine in the arrangement of pump and motor piston, but it is subject to considerable difficulties in securing the discharge of the burned gases without simultaneously losing unburned mixture of gas and air. The principal difficulty of all engines having open exhaust ports at the time of charging the cylinder lies in the proportioning and directing the flow of the entering gas and air to displace the burned gases without passing unburned gas away through this exhaust port. In the Clerk engine this trouble was met by the long conical entrance and considerable length of cylinder for the sweep of the entering gases ; and in all engines such as the 'Trent' and the 'Fawcett,' where the power piston is discharging gases simultaneously with the entrance of the fresh charge, this trouble is increased, and it becomes necessary to leave large volumes of exhaust gases in the cylinder to avoid loss of gas at the exhaust ports. Mr. Beechey has succeeded very well indeed in minimising loss from this cause, as shown by the very fair results he obtains. He has the advantage of greater expansion than the 'Otto' type, although the disadvantage of greater proportion of exhaust gas brings down his economy.

CHAPTER II.

OTTO CYCLE GAS ENGINES.

THE 'Otto cycle engines are those which possess at present a living practical interest, and great advances have been made in them since 1886 ; in particular the gas consumption has been much reduced. The power of the engines constructed has also been greatly increased. In 1886 a nine-horse (nominal) gas engine of Messrs. Crossley's construction consumed about 27 cb. ft. of Manchester gas per brake horse power per hour, and now (1895) a similar engine consumes as little as 17 cb. ft. per brake horse power. The increase in power is also striking ; engines of 40 HP were the largest made in 1886, but now Otto cycle engines are built as large as 400 IHP. It is interesting to trace the steps which have made such improvement possible, and this will be best done by the study of the drawings of Otto cycle engines of recent construction. As the Messrs. Crossley are still the leading constructors of gas engines in the world, turning out from their shops about sixty engines every week, the author will first consider one of their engines.

Crossley Otto Engine.—Careful drawings have been made of a Crossley Otto engine of 9 HP (nominal) built in 1892, and now at work at the Clifton Rocks Railway, Bristol. The engine is numbered 19772. It has been thought best to select an actual engine as an example in order to clearly appreciate the points of difference from the earlier engines. The particular engine selected was tested by the author for power and gas consumption. The engine shows many points of advance over the 1886 engines, but curiously enough, although it possesses all the necessary valve arrangements to enable high compression pressures to be utilised, yet defects in the proportion of the compression space and piston prevented the use of high compression, and the engine did not give the best economy possible for the particular type. Accordingly the gas

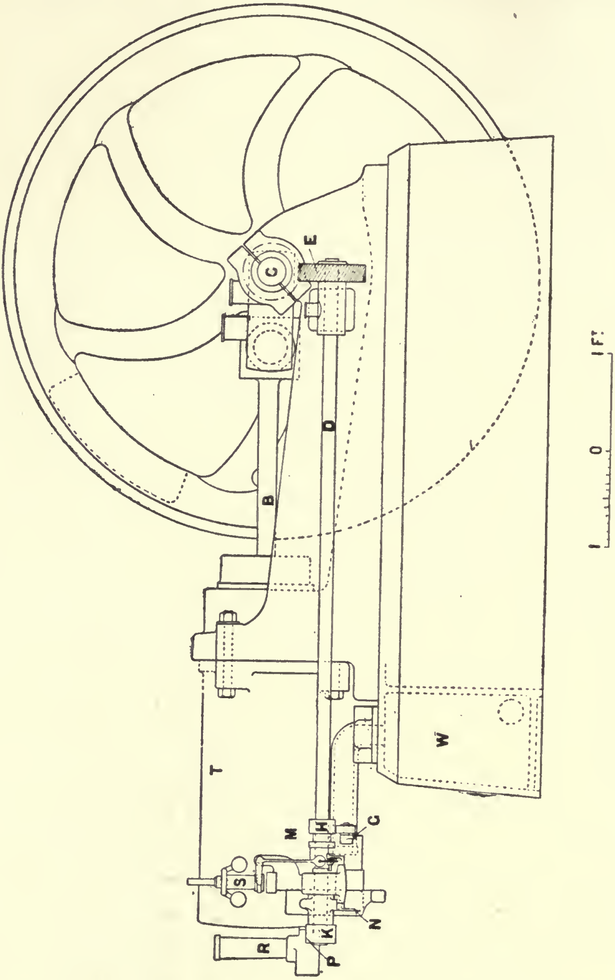

Fig. 116.—Crossley Otto Engine, 9 HP Nominal (elevation).

consumed per brake HP hour was 25·9 cb. ft. This is a much better result than would have been obtained from a slide valve

Otto engine such as illustrated on pages 167, 169 and 171 of this work, but it is not nearly so good as the type allows.

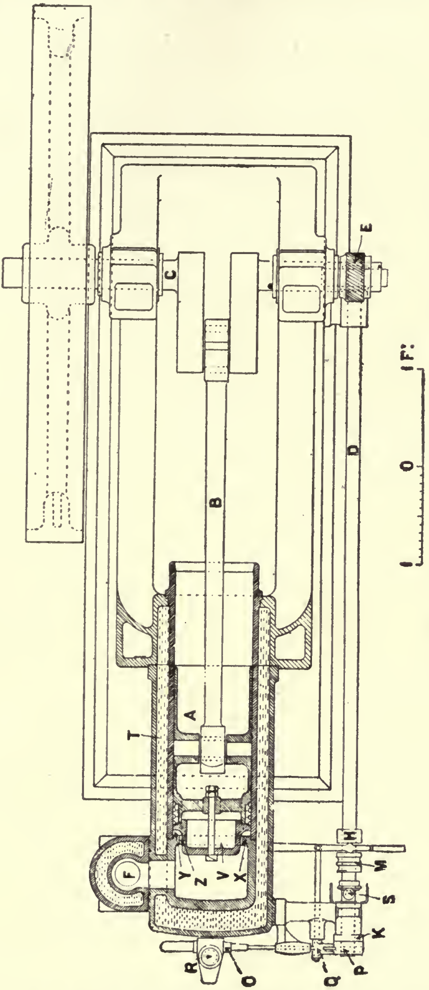

Fig. 117.—Crossley Otto Engine, 9 HP Nominal (plan part section).

Fig. 116 is a side elevation of the engine; fig. 117 is a plan part in section; fig. 118 an end elevation; figs. 119–123 inclusive are drawn to a larger scale; fig. 119 is a side elevation of the back end of the cylinder looking on the cam shaft; fig. 120 is a corresponding plan; fig. 121 an end elevation; fig. 122 a vertical longitudinal section through the cylinder, and fig. 123 is a separate section on a still larger scale of the igniter tube and funnel.

A comparison of the illustrations with those of the earlier slide valve engine at once shows great mechanical development and points of constructive difference. Thus in the early engine the crosshead guide and the engine cylinder were two distinct parts requiring to be bolted together in accurate alignment in order to allow the piston with its crosshead slide to work freely without jamming: in the later engine a long trunk piston is used which serves the double purpose of piston and crosshead guide; the separate crosshead slide is, in fact, dispensed with, and consequently the cylinder serves as its own slide guide, requiring no adjustment of separate parts. The cylinder, that is, serves both as cylinder and slide guide, and the whole cylinder is bolted to the bed against a powerful faced flange.

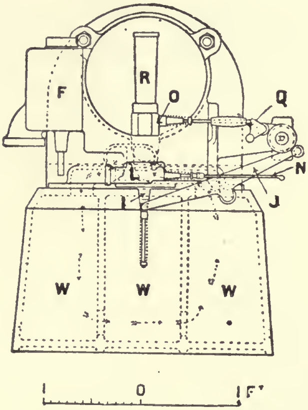

FIG. 118.—Crossley Otto Engine, 9 HP Nominal (end elevation).

The bevil wheels of the early design are also dispensed with and replaced by skew or worm wheels, which besides taking up much less space provide a much quieter drive for the two to one shaft. The unsightly distortion of the bed shown in fig. 51 necessary to admit the bevil wheels is quite avoided, as is clearly seen at fig. 117. There are many smaller points of constructive difference which the experience of years has shown to be desirable, but the great points of departure are to be found in—the suppression of the flame slide valve method of ignition, and the introduction of the incandescent tube igniter; the diminution of the relative volume of the compression space, which is not carried out to its proper extent in this individual engine; and the improved proportioning of the valves and ports in order to minimise the throttling of the charge during the inlet period and the back pressure of the exhaust gases during discharge.

The engine follows the same cycle of operations as the old engine; that is, by one movement of the piston it takes into the cylinder a charge of gas and air which is compressed on the return stroke into a space at the end of the cylinder, there to be ignited in order to give the explosion and produce the power stroke ; the power stroke is then followed by the exhausting stroke, and the engine is ready to go through the same operations to prepare for another power stroke. In this engine the charge of gas and air is admitted by the inlet valve I, which is of the conical seated lift type ; the valve is operated by the lever J from a cam K on the valve shaft D. This valve shaft is rotated at half the speed of the crank shaft by means of worm wheels or skew gear E. The gas supply is admitted to the inlet valve I by the lift valve L, which valve is also operated by the lever and link N and cam M, controlled, however, by the centrifugal governor S. The governor operates to either admit gas wholly or cut it off completely, so that the variation in power is obtained

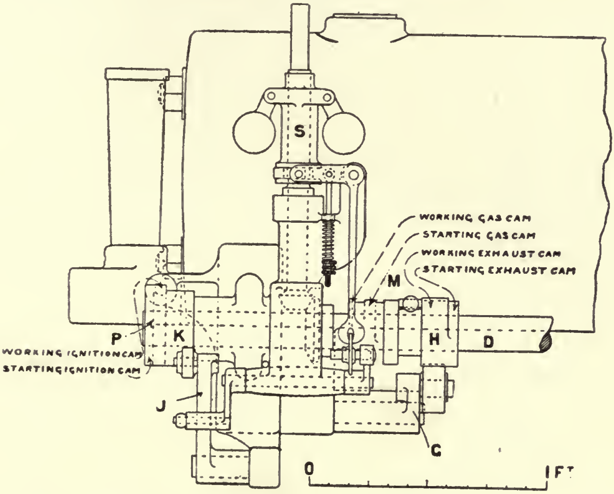

FIG. 119.—Crossley Otto Engine, 9 HP Nominal (side elevation, back end).

by varying the number of the explosions. The exhaust valve F is also a conical seated lift valve, and it is actuated by the lever C and cam H. The ignition is produced by admitting a portion of the compressed inflammable charge from the compression space to the tube R, rendered incandescent by the Bunsen flame. The passage to the igniter tube is controlled by the valve O, which valve is operated by the lever Q and cam P. The valve O is double seated, and during the compression period of the engine the face nearest the compression space is kept up against the seat by a powerful spring; the incandescent tube is thus kept open to the

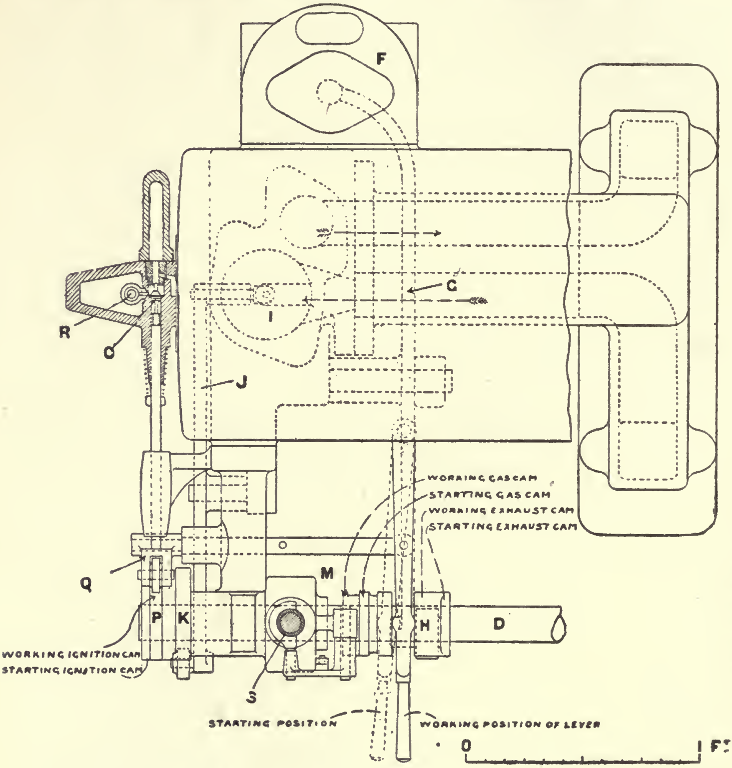

FIG. 120.—Crossley Otto Engine, 9 HP Nominal (plan, back end).

atmosphere, and notwithstanding any leak which may occur from the cylinder the tube remains empty until the moment when it is required for ignition. When the valve is lifted from one seat a small portion of the compressed mixture is discharged through a small port to the air, and this clears out the burned gases, which would otherwise render ignition irregular, and permits pure combustible mixture to reach the incandescent internal surface of the tube when the outer valve face closes on its seat. This device causes the ignition of the explosive mixture at the proper time.

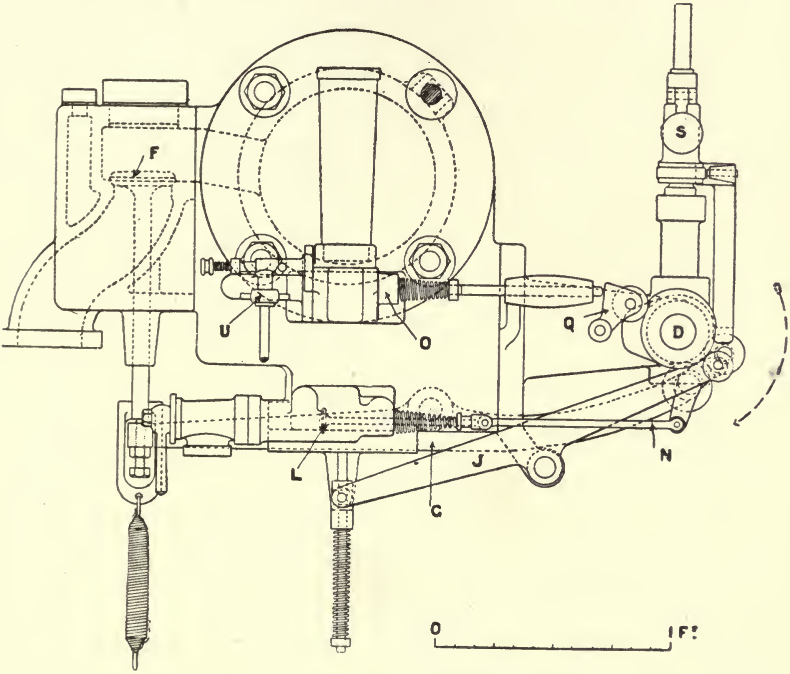

FIG. 121.—Crossley Otto Engine, 9 HP Nominal (end elevation).

The adoption of lift valves for the admission and discharge of gases to and from the engine cylinder simplifies the practical problem of admitting and discharging with the least possible throttling or wire drawing. So long as slide valves were used to admit the charge to the cylinder, it was difficult to provide a sufficiently large inlet area, as the area allowed in a port bearing against a slide surface determined the pressure necessary to hold the slide against the valve face to prevent the escape of flame when the compressed mixture was exploded. In a six horse-power engine of the old type, for example, the inlet port in the back cover was 2⅜ inches long by ⅝ inch wide, equal to 1·5 square inches. Assume the maximum pressure of the explosion to be

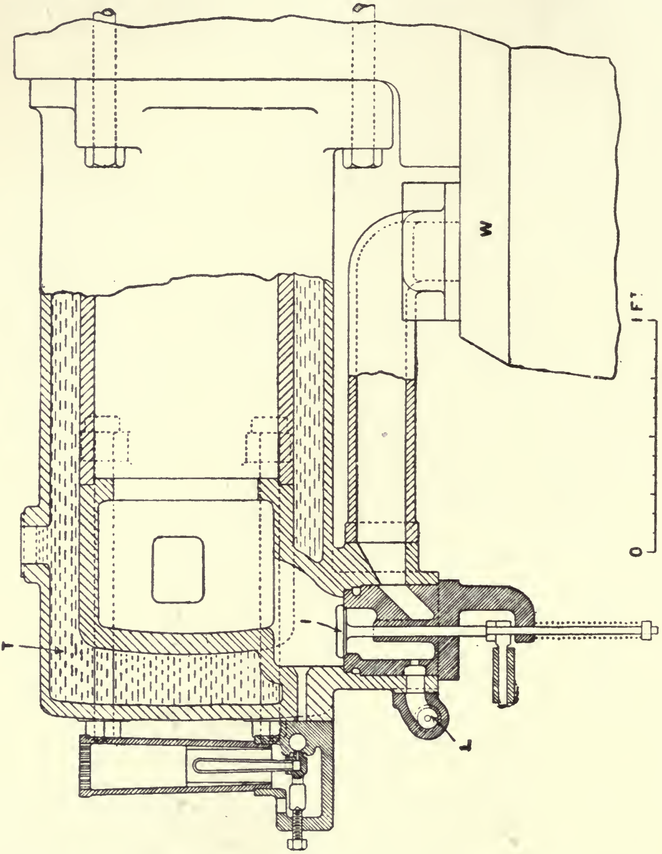

FIG. 122.—Crossley Otto Engine, 9 HP Nominal (vertical section, end).

150 lbs. per square inch, then the slide valve must be pressed to its working face with a pressure not less than 225 lbs.; as a matter of fact the slide was pressed up to its work with a pressure of about 600 lbs. When it is considered that the flame temperature during the explosion is about 1600° C. it is easy to comprehend the difficulty of keeping the slide cool enough to maintain a good working surface even at comparatively low pressures. Designers of slide engines for this reason were forced to content themselves both with the minimum of port area and with low compressions. Small port area produced naturally considerable resistance to the inflowing charge, and low compressions prevented the attainment of any great economy of gas consumption. In the old engines, the velocity of flow of the air and gases entering the cylinder often exceeded 244 feet per second, so that when the piston reached the out end of its stroke the cylinder was not filled up to atmospheric pressure. The evil of throttling in this way was not confined to the active loss of power due to the resistance to the charging stroke of the piston; the greatest loss was caused by the considerable reduction in the weight of the charge drawn in, and the consequent increase in the proportion of the exhaust gas present. In many cases it was found that the contents of the cylinder were at a pressure of $1\frac{1}{2}$ lb. per square inch below atmosphere when the engine terminated its charging stroke, and this meant that the total volume of charge admitted was reduced by 20 per cent. as compared with the charge which would have entered had the admission area been sufficient to allow the cylinder to fill up to atmospheric pressure. The proportion is greater because of the large volume of the compression space which must be allowed for in calculating the loss due to deficit of pressure. The

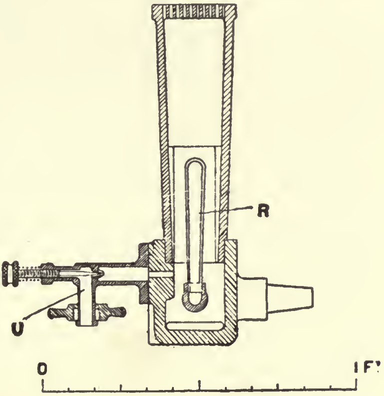

FIG. 123.—Crossley Otto Engine, 9 HP Nominal (section of tube igniter).

slide valve was undoubtedly a formidable difficulty in these engines, now happily overcome by the substitution of lift valves. With lift valves it is easy to provide any desired admission port area, as the pressure of the explosion holds the valve to its seat, and large valves may be used just as readily as small ones. In the engine illustrated in figs. 116–123 the admission area is 6·52 square inches, with the valve full open, and assuming maximum opening to remain during the whole charging stroke the velocity of the entering charge is only 87 feet per second. This engine is therefore better supplied with combustible mixture than the old slide engine.

The compression pressure in a slide valve engine is limited by the difficulty of preventing a slide from cutting on its face at high compression and explosion pressures, and this difficulty is also overcome by the use of lift valves when combined with an incandescent tube igniter.

In the older engines the importance of a free exhaust exit was not fully recognised, and although the exhaust valves were lift valves, the discharge area provided was insufficient. Thus in the six-horse slide valve engine referred to, the average velocity of the exhaust gases past the exhaust valves was 137 feet per second; in the present engine it is only 48 feet per second. The exhaust gases are thus better discharged in the recent engine. Any increase in the volume of the exhaust products causes loss of economy in a gas engine; a small proportion does little harm, but a large volume of exhaust heats the entering charge and so raises the temperature of compression. Premature ignitions are also caused by the compression of a charge mixed with hot exhaust. Designers now endeavour to expel exhaust products as completely as possible.

The engine illustrated has several bad points, and it appears to the author to be one issued by the makers while they were in a transition stage, probably engaged in increasing their compression pressures. To get the best possible results from a given volume of explosive mixture, it should be compressed into a combustion space, having the minimum of port capacity communicating with the admission and exhaust valves. In the older engines this point was not appreciated, and the port capacity was always excessive. In this engine the port capacity back to the exhaust and inlet valves is undoubtedly too great. Ports act as condensers for the flame of the explosion, and rapidly cool the ignited charge at a time when it least bears cooling. Any narrow spaces should also be avoided, and this engine presents an example of attempting to increase compression, by means of the block V attached to the piston, which should be carefully avoided. It will be noticed that the block V, fig. 117, projects into the combustion space through the reduced diameter part X, and so forms the annular space Y between the piston proper and the reduced casing. This annulus has a cooling effect on the flame under the explosion pressure while the piston A is practically stationary, but it has a much more serious cooling effect whenever the piston begins to move out. The flame gases then pass through the space between the piston block V and the ring X into the annulus Y, and so the flame is dragged through a cooling or condensing surface, and considerable loss is thus caused. Indeed it may be at once stated, that to gain the greatest advantage from high compressions the whole of the compressed explosive mixture should be contained in *one* space, that is a space which is not divided into smaller separate spaces. Ports should be avoided if possible, and the flame should never be caused to flow through a narrow space into a wider one, as is done in this engine. The compression space should in fact be as nearly cubical or spherical as possible. Notwithstanding these defects, the engine shown in the illustration gives much better results than the old slide valve engines. For the purpose of comparison the author made practically simultaneous tests on the engine illustrated and on an old slide valve engine of six horse power (nominal). The results obtained are given in the table on page 310, and all the important valve settings and numbers are also given.

Fig. 124 is a diagram from the engine illustrated. It is a fair example of those taken during the test.

Fig. 125 is the corresponding light spring diagram.

Fig. 126 is a diagram from the slide valve engine which has been referred to, and fig. 127 is a light spring diagram also from the slide valve engine.

The scales of the diagram figs. 124 and 126 are different, as one required a much stronger indicator spring. It will be observed that the slide valve engine only gives an available working pressure of 54·8 lbs. per square inch, while the lift valve engine gives 81·5 lbs.; and on comparing the light spring diagrams it will be seen that with the slide valve engine the pressure falls considerably below atmosphere at the end of the charging stroke, while with the other engine the pressure rises nearly to atmosphere before the stroke terminates.

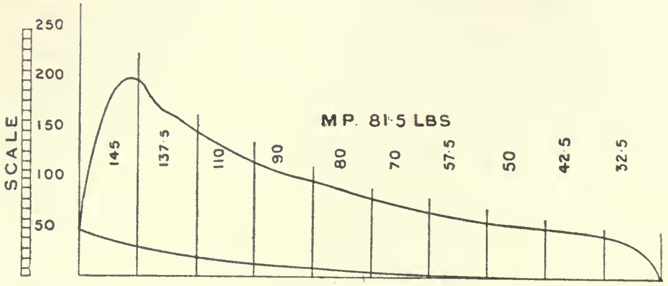

Nominal HP, 9; diam. of cylinder, $9\frac{1}{2}''$; length of stroke, 18″; revs. per min. 160; indicated HP, 19·25; consumpt. per IHP per hour, 21·2 cb. ft.; consumpt. loose, 70 cb. ft. per hour; brake HP, 15·75; consumpt. per BHP per hour, 25·9 cb. ft.; mean pressure, 81·5 lbs.; max. pressure, 200 lbs.; pressure before ignition, 46 lbs.; scale of spring, $\frac{1}{120}''$ per lb.

FIG. 124.—Crossley Otto Engine, 9 HP Nominal (diagram).

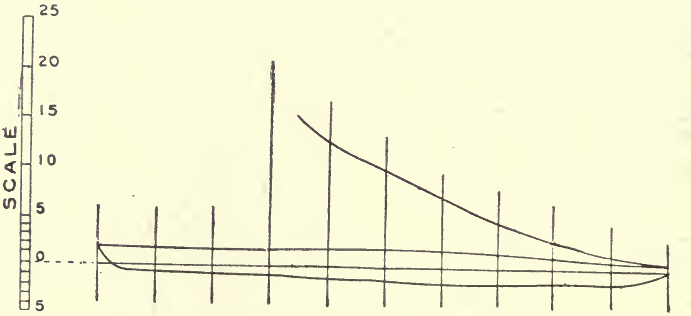

Scale of spring, $\frac{1}{16}''$ per lb.; mean pressure, 2·5 lbs.; charging resistance, 0·7 IHP; total resistance running loose, 3·3 IHP.

FIG. 125.—Crossley Otto Engine, 9 HP Nominal (light spring diagram).

Crossley Otto 'Scavenging' Engine.—The Crossley Otto engines now built differ to a considerable extent from the engine No. 19772 which has been here discussed. Figs. 128 and 128A show the external appearance of the present engines. Fig. 128 shows the 30 HP nominal engine of 17 in. cylinder and 24 in. stroke, intended for ordinary driving and running at 160 revolutions per min. Fig. 128A is the 30 HP nominal electric lighting engine of

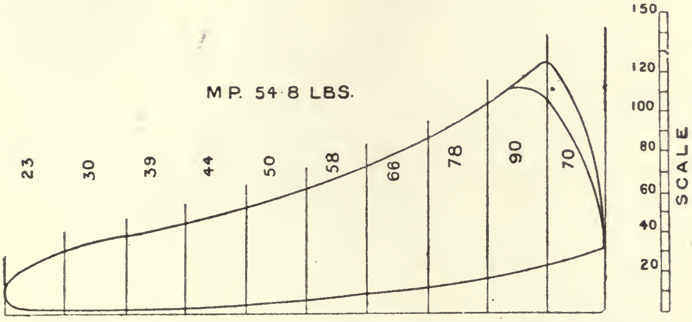

Nominal HP, 6; diam. of cylinder, 8″; length of stroke, 16″; rev. per min. 164; indicated HP, 9; consumpt. per IHP per hour, 25·5 cb. ft.; brake HP, 6·75; consumpt. per BHP per hour, 34 cb. ft.; mean pressure, 54·8 lbs.; max. pressure, 125 lbs.; pressure before ignition, 32 lbs.; scale of spring, $\frac{1}{80}$″ per lb.

FIG. 126.—Crossley Otto Engine, 6 HP slide valve (diagram).

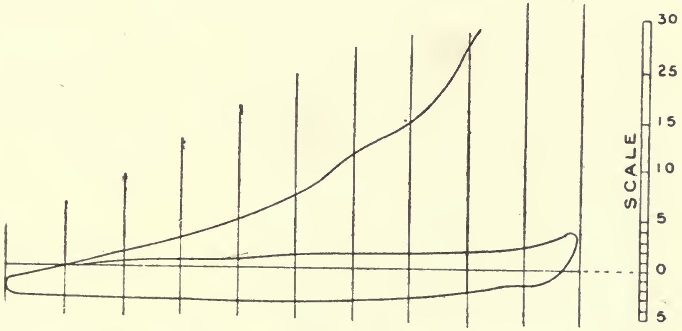

Scale of spring, $\frac{1}{16}$″ per lb.; mean pressure, 3·85; charging resistance, 0·7 IHP; total resistance running loose, 2·25 IHP.

FIG. 127.—Crossley Otto Engine, 6 HP slide valve (light spring diagram).

PRINCIPAL PARTICULARS OF A 6 NHP CROSSLEY OTTO GAS ENGINE, BUILT ABOUT 1881, AND A 9 NHP CROSSLEY OTTO GAS ENGINE, NO. 19772, BUILT IN 1892.

	6 NHP Engine, No 4683 6″ diam. cylinder × 16″ stroke	9 NHP Engine, No. 19772 $9\frac{1}{2}''$ diam. cylinder × 18″ stroke
Volume swept by piston	804 cub. ins.	1275·8 cub. ins.
Volume of compression space	516 cub. ins.	510 cub. ins.
$\frac{\text{Vol. swept by piston}}{\text{Vol. of comp. space}}$	$\frac{804}{516}=\frac{1}{0·64}$	$\frac{1275·8}{510}=\frac{1}{0·4}$
Compression pressure	31 lbs. per sq. in. above atmos.	48 lbs. per sq. in. above atmos.
Explosion pressure	125 lbs. per sq. in. above atmos.	200 lbs. per sq. in. above atmos.
Mean available pressure	57 lbs. per sq. in.	81·5 lbs. per sq. in.
Revolutions per minute	164	160
Indicated horse power	9·0	19·25
Brake horse power	6·75	15·75
Gas consumption per hour (including ignition)	236 cub. ft.	408 cub. ft.
Gas per IHP per hour	25·5 cub. ft.	21·2 cub. ft.
Gas per BHP per hour	34 cub. ft.	25·9 cub. ft.
Mechanical efficiency	75 per cent.	81 per cent.
Area of charge inlet port	(Slide valve) 1·5 sq. in.	(Inlet valve $2\frac{3}{8}''$ diam. × $\frac{7}{8}''$ lift) 6·52 sq. ins.
Inlet port setting	Is $\frac{1}{4}''$ open when piston is on in centre, and $\frac{1}{8}''$ open when, piston is on out centre	Opens dead on in centre, is held open on out centre, and closes when the piston returns $1\frac{1}{2}''$ in. At 1″ in movement of piston the valve is $\frac{5}{16}''$ open
Exhaust valve	($2\frac{1}{4}''$ diam. × $\frac{3}{8}''$ lift) 2·65 sq. in. area	(3″ diam. × $1\frac{1}{4}''$ lift) 11·78 sq. in. area
Exhaust valve setting	Opens while piston is 1″ in from out end of stroke. Closes when piston has crossed in centre and moved out $\frac{1}{2}''$	Opens while piston is $2\frac{1}{4}''$ from out end of stroke. Closes exactly on in centre.
Ignition lead	Ignition port in slide is an $\frac{1}{8}''$ open when crank is on in centre	(Lift valve tube igniter) valve $\frac{5}{16}''$ diam. × $\frac{5}{16}''$ lift, opens $1\frac{1}{2}''$ before compression is complete, but only full open $\frac{1}{2}''$ before compression is complete
Charge velocity	244 ft. per sec.	87 ft. per sec.
Exhaust velocity	137 ft. per sec.	48 ft. per sec.
Piston speed	437 ft. per min.	480 ft. per min.
Power absorbed charging and exhausting	0·7 IHP	0·7 IHP
Gas inlet valve	$\frac{3}{8}''$ diam. × $\frac{3}{8}''$ lift	1″ diam. × $\frac{3}{8}''$ lift
Gas inlet valve setting	When piston has made $1\frac{1}{4}''$ forward stroke valve opens	When piston has gone $2\frac{1}{4}''$ forward stroke valve opens, and does not close till out centre has been crossed and piston returns $1\frac{1}{4}''$. Valve is $\frac{3}{16}''$ open when piston is full out

17 in. diam. cylinder and 21 in. stroke, which runs at 230 revolutions per min., and with coal gas will indicate a maximum power of 117 horse. The engines now supplied are of the 'scavenging'

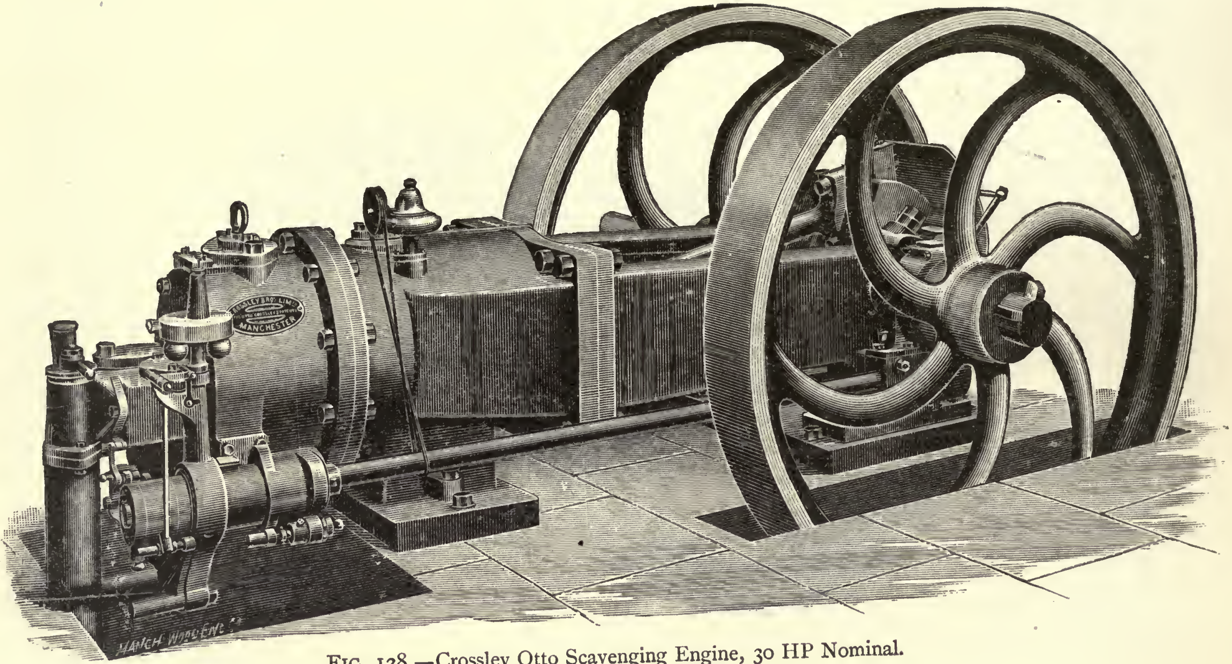

FIG. 128.—Crossley Otto Scavenging Engine, 30 HP Nominal.

type. The general external appearance is similar to that illustrated, but an important modification is made in the operations performed by the engine. In addition to the cycle of operations described, the engine is so arranged that the exhaust gases formerly remaining in the combustion space are swept out and the combustion space filled with air. The combustible charge in this engine is therefore a pure mixture of gas and air without any

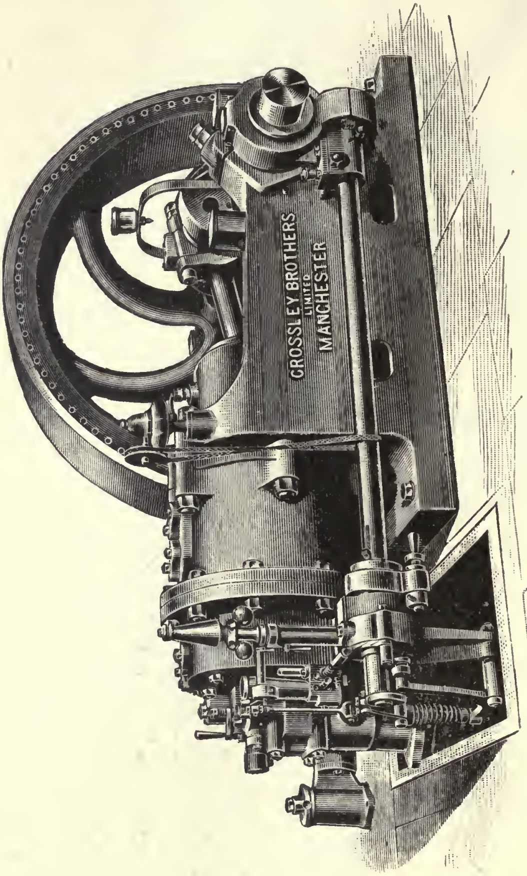

Fig. 128A.—Crossley Otto Scavenging Engine, Electric Lighting, 30 HP Nominal.

exhaust gases. To accomplish this clearing out of the burned gases and their replacement by air, advantage is taken of the oscillations or waves of pressure set up in the exhaust pipe by the discharge of the exhaust gases. It has long been known that in a gas engine exhaust pipe the pressure of discharge is succeeded by a partial vacuum, and this vacuum again succeeded by pressure, in fact that under certain circumstances an oscillation of pressure is set up in the exhaust pipe, giving a fall of pressure at certain periods after the exhaust valve is opened. Messrs. Crossley & Atkinson take advantage of this fact, and so control the pressure wave and the following vacuum that after the exhaust gases have been liberated from the cylinder of the

FIG. 129.

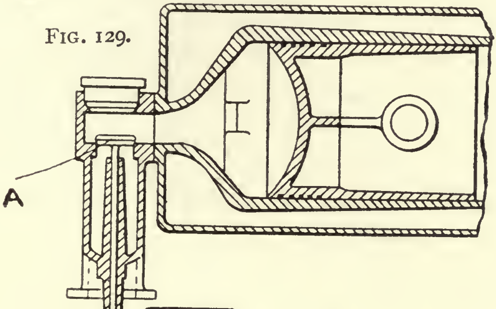

FIG. 130.

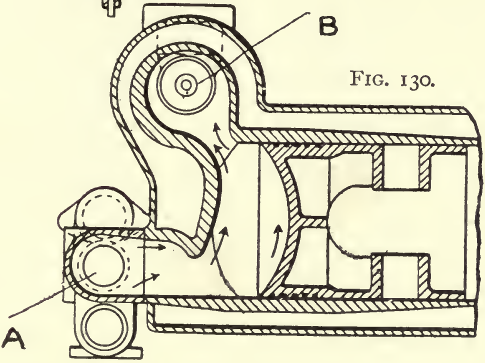

FIG. 129.—Crossley Otto Scavenging Engine (vertical section of cylinder).
FIG. 130.—Do. (sectional plan of cylinder).

engine the high-pressure discharge is succeeded by a vacuum, the period of the vacuum coinciding with the approach of the piston to the end of its exhaust stroke. By then keeping open the exhaust valve and opening the charge or an inlet valve while the exhaust valve is open, a charge of pure air is drawn through the combustion space to sweep out the burned gases from the compression space. When the charging stroke is complete the whole cylinder is thus filled with a pure mixture of gas and air without the deleterious burned gases. To accomplish this sweeping out in a satisfactory manner it is necessary to shape the cylinder so as to favour the free flow of the entering air.

FIG. 131.

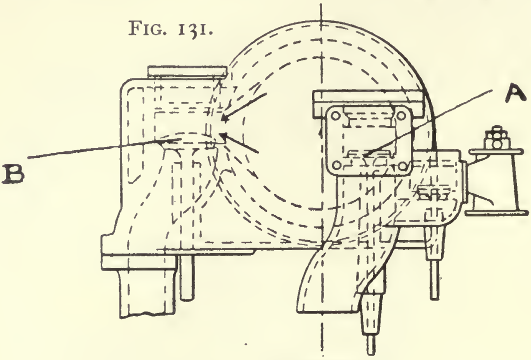

FIG. 132.

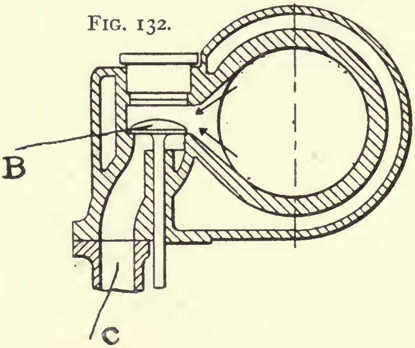

FIG. 131.—Crossley Otto Scavenging Engine (end elevation).
FIG. 132.—Do. (transverse section).

Figs. 129, 130, 131, 132 are, respectively, vertical section; sectional plan ; end elevation ; and transverse section illustrating the arrangement of a 4 HP nominal engine tested by the author at Messrs. Crossley's works in Manchester.

Fig. 133 illustrates in a diagrammatic way the settings of the valves in that engine.

The desired delay in the production of the vacuum is brought about by attaching an exhaust pipe C of about 65 ft. long. Quieting chambers may be placed at the end of that length of pipe without affecting the result, but no large expansion or chamber should be put nearer to the engine cylinder. The energy of discharge of the exhaust sets the long column of gases filling the pipe in oscillating motion, and enables a considerable reduction of pressure to be produced just as the piston is completing its exhausting stroke. Fig. 134 is a light spring diagram taken from the engine during the author's test, and it plainly shows the effect of the vacuum so produced in the exhaust pipe. It will be noted that at the termination of the exhausting stroke the pressure in the cylinder has fallen to 2 lbs. per square inch below atmosphere, a reduction of pressure amply sufficient to cause a flow of air from the atmosphere sweeping through the cylinder.

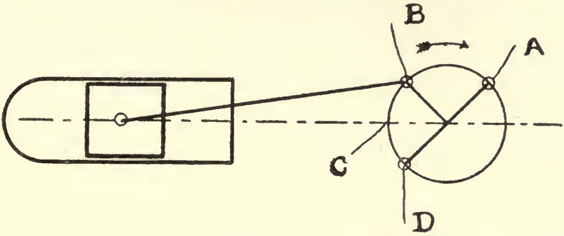

FIG. 133.—Crossley Otto Scavenging Engine (valve settings).

On figs. 130 to 132 the arrows show the direction of the air current passing in by the inlet valve A through the specially shaped cylinder and out at the exhaust valve B.

In fig. 133 the air inlet valve is opened while the crank is in the position D, and the exhaust valve is held open till the crank reaches the position B. The exhaust valve opens again at A, and it is held open to B position instead of as usual to C position. The inlet valve is thus held open during the existence of a partial vacuum in the exhaust pipe, and so a 'scavenging' charge of air is drawn through the combustion space and the products replaced by pure air.

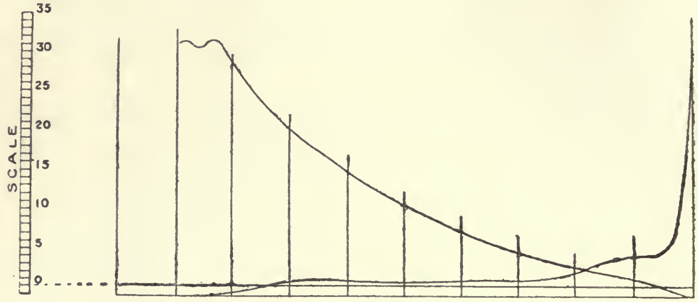

Scale of spring, $\frac{1}{18}''$ per lb.; charging and scavenging diagram; charging diagram of 4 NHP Crossley Otto Engine.

FIG. 134.—Crossley Otto Scavenging Engine (light spring diagram).

Fig. 135 is a diagram taken by the author during his test of the scavenging engine at Messrs. Crossley's works, Openshaw. The leading particulars are marked upon the diagram, from which it will be observed that the engine gave results which were most

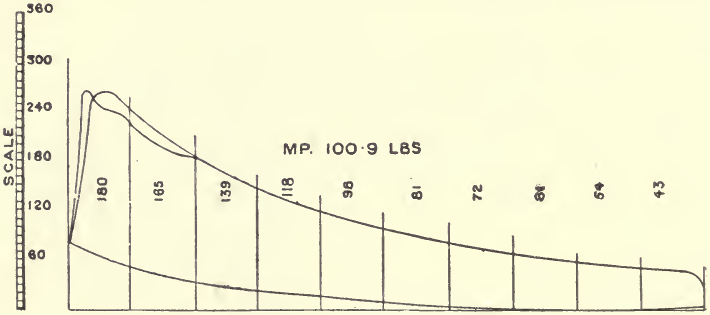

Nominal HP, 4; diam. of cylinder, 7''; length of stroke, 15''; rev. per min. 200; indicated HP, 14; consumpt. per IHP per hour, 14·5 cb. ft.; brake HP, 11·97; consumpt. per BHP per hour, 17·0 cb. ft.; mean pressure, 100·9 lbs.; max. pressure, 274 lbs.; pressure before ignition, 87 lbs.; spring, $\frac{1}{180}''$.

FIG. 135.—Crossley Otto Scavenging Engine (power diagram).

remarkable both from the points of power and economy. The engine, although only 7 in. diam. cylinder and 15 in. stroke, gave practically 12-brake horse power on a gas consumption of 17 cb. ft. per brake horse power hour, a surprisingly good result for so small an engine. Openshaw gas is 20 candle power, and has a heat value of 53,000 ft. lbs. per cb. ft.

Diagrams and Gas Consumption.—The diagrams given at figs. 124, 125, 126, 127, 134 and 135 illustrate very fairly the progress made in the Crossley Otto engine from the old slide valve engine to the present lift valve scavenging engine, and it is interesting to compare the consumption of these three engines. They are as follows :

	Gas per IHP hour	Gas per BHP hour	Compression pressure per sq. in. above atmos.
Slide valve engine . . .	25·5 cb. ft.	34 cb. ft.	30 lbs.
Lift valve engine, No. 19772 .	21·2 cb. ft.	25·9 cb. ft.	46 lbs.
Lift valve scavenging engine .	14·5 cb. ft.	17 cb. ft.	87·5 lbs.

The advance made by the Messrs. Crossley is quite unmistakable ; the brake consumption is now just about half of the consumption in a Crossley Otto engine built in 1881. No doubt many of their slide valve engines were more economical than the one tested by the author, and the gas consumption of engine No. 19772 does not represent the most favourable result attained by the Messrs. Crossley before the advent of the scavenging engine. Thus the Crossley engine tested at the Society of Arts trials at the end of 1888 had a cylinder of 9·5 ins. diameter and a stroke of 18 ins. The gas consumed per indicated horse power per hour was 20·55 cb. ft. and per brake horse power 23·87 cb. ft. The compression pressure was 61·6 lbs. per sq. in. above atmosphere. The indicated power was 17·12 horse, brake power 14·74 horse, and the speed of the engine 160 revs. per minute. The mean effective pressure was 67·9 lbs. per sq. in. and the initial pressure of the explosion 197 lbs. per sq. in. above atmosphere.

The author's test of the 4 HP Crossley Otto scavenging engine was made in August 1894, so that, taking the Society of Arts Crossley engine as the most economical up to that date, from

1888 to 1894 the Messrs. Crossley succeeded in reducing the gas consumption per brake horse power from 24 to 17 cb. ft.

It is to be remembered that this figure of 17 cb. ft. per brake HP was obtained with a small engine. Mr. Atkinson, of Messrs. Crossley, has given the author results of a test made with an engine of 11½ in. diam. cylinder and 21 in. stroke also at Manchester. The power indicated was 46·8 horse, and the gas consumption was only 13·55 cb. ft. per IHP hour. The consumption of 17 cb. ft. per brake HP per hour is the lowest of which the author has experience with an engine so small. It will be observed that increasing economy in the Crossley Otto engine has always been accompanied by an increase of compression; thus a compression of 30 lbs. in the slide valve engine of 1881 has been displaced in 1894 by a compression of 87·5 lbs.

Compression has evidently some part in securing the advantages of the present engine. Mr. Atkinson, in a paper read before the Manchester Association of Engineers, attributes the whole of the economy of the recent engine to the discharge of the burned gases and their replacement by pure air. In this the author does not agree with him ; he will, however, reserve the discussion of the matter to a general chapter upon gas engine economy, and he will now proceed to give a short account of the Otto engines of other makers.

The Stockport Otto Engine.—Messrs. J. E. H. Andrew & Co. of Reddish now build a well-designed and carefully made Otto engine which they call the 'Stockport Otto.' Figs. 136, 137 and 138 illustrate its principal details. Fig. 136 is a side elevation of the cylinder and back part of the engine frame showing the back cover in longitudinal section through the admission valves. Fig. 137 is an end elevation looking on the back cover, partly in section to show the igniting valve, the charging valve, and the exhaust valve.

Fig. 138 is a section on a larger scale of the incandescent tube and the timing and starter valve.

In fig. 136 the gas and air admission valve is shown nearest to the combustion space, the air to supply it being drawn along a passage cast outside the cylinder water jacket, from the bed of the engine, which serves as an air suction silencer. The gas supply valve is shown outside the charge admission valve; it is pressed down to its seat by a spring above it, and when it is lifted the gas from the gas pipe

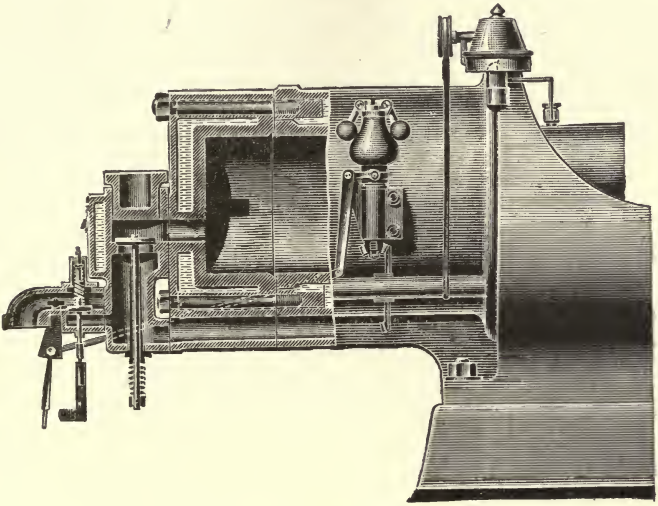

FIG. 136.—Stockport Otto Engine (side elevation).

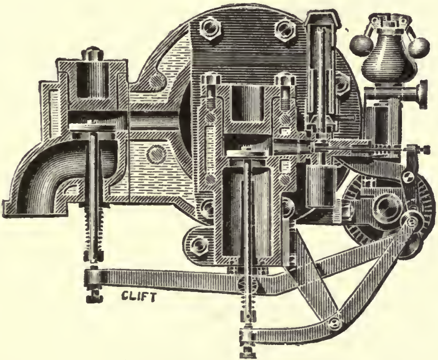

FIG. 137.—Stockport Otto Engine (end elevation).

passes directly into the chamber under the charging valve and mixes with the air entering the cylinder. The gas valve is operated by a lever similar to those shown in fig. 137, but the centrifugal governor shown in fig. 136 controls the lever by means of an interposing lever shown as connected to the governor sleeve. A short straight port communicates with the interior of the cylinder from above the charging valve. In fig. 137 the charging valve is again seen in section in the middle of the cylinder; the exhaust valve is also shown in section at the left-hand side of the drawing; both valves are brought to their seats by springs, and are operated by levers from the side shaft. In fig. 137 is also shown a section of the igniter tube and its timing valve. The timing valve opens into the port above the admission valve, and it is controlled by a lever and cam shown. From fig. 137 it will be seen that the exhaust valve is also connected to the cylinder by a short straight port. The section of igniter tube and starting valve, fig. 138, shows an incandescent metal igniter tube G, heated in the usual manner, but having a small internal tube passing into it from the space

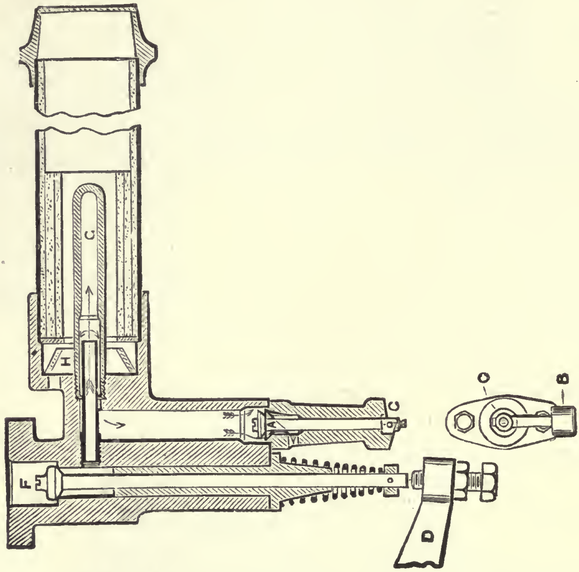

FIG. 138.—Stockport Otto Engine (section incandescent tube and starter).

controlled by the timing valve F. The valve A is used for starting, and will be described later on. The lever D opens the timing

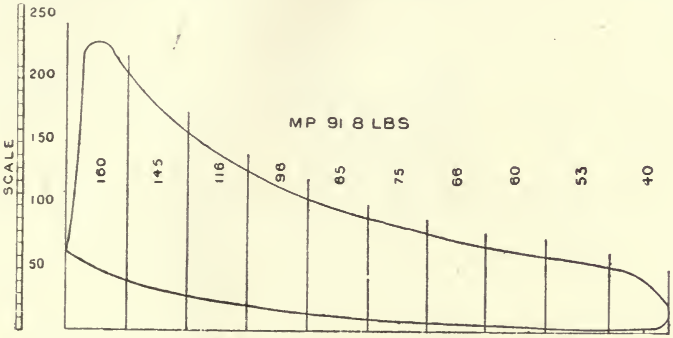

Nominal HP, 9 ; diam. of cylinder, $9\frac{3}{4}''$; length of stroke, 17″ ; rev. per min. 184 ; consumpt. per IHP per hour, 19 cb. ft. ; brake HP, 20·8 ; consumpt. per BHP per hour, 22·3 cb. ft. ; consumpt. loose, 63·6 cb. ft. ; mean pressure, 91·8 lbs. ; max. pressure, 230 lbs. ; pressure before ignition, 60 lbs. ; scale of spring, $\frac{1}{100}''$ per lb.

FIG. 139.—Stockport Otto Engine (power diagram, 60 lbs. compression).

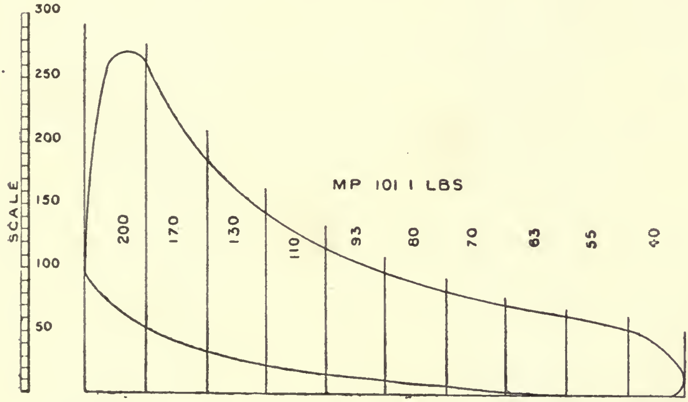

Nominal HP, 9 ; diam. of cylinder, $9\frac{3}{4}''$; length of stroke, 17″ ; rev. per min. 182 ; consumpt. per IHP per hour, 17·6 cb. ft. ; brake HP, 24·4 ; consumpt. per BHP per hour, 20·75 ; consumpt. loose, 72 cb. ft. ; mean pressure, 101·1 lbs. ; max. pressure, 270 lbs. ; pressure before ignition, 90 lbs. ; scale of spring, $\frac{1}{100}''$ per lb.

FIG. 140.—Stockport Otto Engine (power diagram, 90 lbs. compression).

valve F at the proper moment and admits compressed inflammable mixture from the port above the admission valve of the engine to the tube G by way of the internal tube. The mixture then ignites, and the explosion is communicated to the cylinder. The chamber above the valve A serves to cause a sufficient rush through the tube G to make certain that explosive mixture reaches the incandescent surface of the tube; the valve F is held open long enough to allow the whole of the contents of the spaces and igniter to discharge into the exhaust valve so as to be ready for another explosion.

Diagrams and Gas Consumption.—Mr. A. R. Bellamy of Messrs. Andrew & Co. has been good enough to send the author the diagrams, figs. 139 and 140, which have been taken by him from a Stockport Otto engine of the construction described. The engine had a cylinder of $9\frac{3}{4}$ in. diameter and a stroke of 17 in. The particulars of each test have been marked under the diagram.

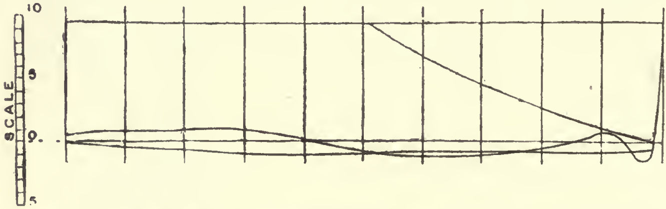

Scale of spring, $\frac{1}{10}''$ per lb.; charging diagram from Engine No. 6242 at 60 lbs. compression.

FIG. 141.—Stockport Otto Engine (light spring diagram).

The diagrams are especially interesting, as they are taken from the same engine, but with a smaller compression space in the one case than in the other. In the first diagram the compression space is proportioned to give a compression pressure of 60 lbs. per square inch, while in the second the compression is 90 lbs. per square inch above atmosphere. The difference in economy is marked, as with the lower compression the engine consumed 19 cb. ft. per IHP hour, and with the higher compression only 17·6 cb. ft. per IHP hour. Fig. 141 is a light spring diagram from the same engine.

Stockport Otto 400 *HP Engine.*—Messrs. Andrew & Co. have built perhaps the largest gas engine in the world, and they have kindly supplied the author with drawings from which the illustrations, figs. 142, 146, have been prepared. The principal dimensions and a list of the parts are marked upon the figures. The arrangement of the engine is novel and interesting ; two cylinders

FIG. 142.

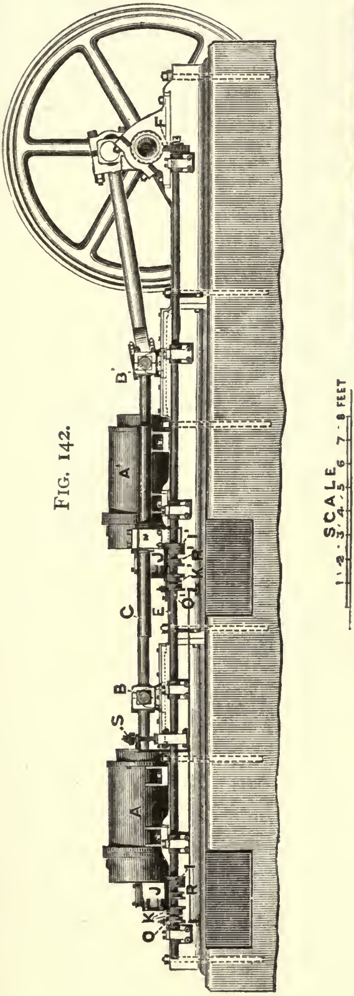

FIG. 142.—Stockport Otto Engine, 400 IHP (elevation).

FIG. 143.

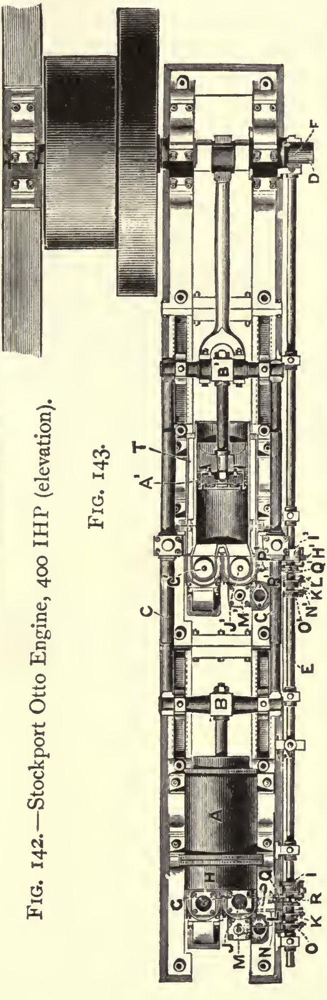

LEADING DIMENSIONS.—Diam. of cylinders, 25″; length of stroke, 36″; diam. of exhaust valves, 9⅓″; diam. of feed valves, 9″; diam. of gas valves (Dowson gas), 9″; crank shaft diam. 10½″.

LIST OF PARTS.—Tandem pistons, A A′; crossheads, B B′; crosshead coupling rods, C C; crank shaft, D; valve gear side shaft, E; two to one worm gear, F; exhaust valves, G G′; exhaust valve levers, H H′; exhaust valve cams, I I′; feed valves, J J′; feed valve cams, K K′; feed valve levers, L L′; gas valves (Dowson gas), M M′; gas valve levers, N N′; gas valve cams, O O′; igniter timing valves, P P′; igniter timing valve levers, Q Q′; igniter timing valve cams, R R′; governor, S; water jackets, T.

FIG. 143.—Stockport Otto Engine, 400 IHP (plan part section).

are mounted, tandem fashion, on a bed plate. To avoid passing a piston rod through a combustion space the pistons are connected by a system of piston rods, crossheads and side rods; both pistons thus connect to one crank shaft by a common connecting rod. Each cylinder operates on the Otto cycle, but the valves are timed to make the explosions alternate, and so an impulse is obtained for every revolution of the fly-wheel.

The engine is applied to actuate a mill at Godalming, and it is supplied with gas generated by a Dowson plant. The maximum indicated power is stated to be 400 horse. The author has not as yet obtained indicator diagrams from this engine.

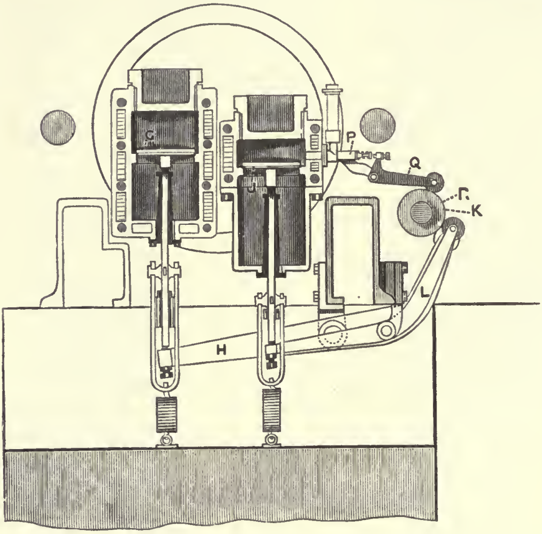

FIG. 144.—Stockport Otto Engine, 400 IHP (end elevation with valve in section).

Barker's Otto Engine.—In the examples which have been given of the Crossley and Stockport Otto engines it will be observed that both charging and exhausting valves communicate with the interior of the cylinder by ports of considerable dimensions. The ports in the Stockport engines are smaller than those in the Crossley;

other conditions being similar, an engine where the whole of the mixture is contained in one large space, without small subsidiary spaces, is less liable to loss of heat at the maximum temperature of the explosion. It follows from this that if ports and passages can be avoided, then greater economy will be obtained. It is very convenient from a constructive point of view to build gas engines with ports, because it allows the charging and admission valves to be contained in separate casings, which can be bolted on the cylinder facings. Such casings also allow of the easy removal of the valves for cleaning, by merely unscrewing a light cover.

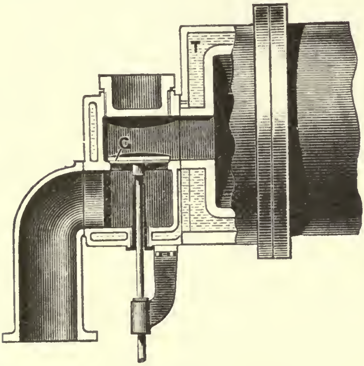

FIG. 145.—Stockport Otto Engine, 400 IHP (longitudinal section through exhaust valve).

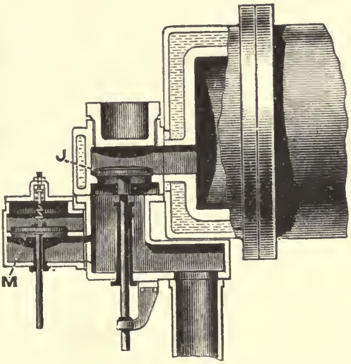

FIG. 146.—Stockport Otto Engine, 400 IHP (longitudinal section through gas and air valves).

Notwithstanding the great convenience of passages, it is important to dispense with them.

Messrs. T. B. Barker & Co. of Birmingham have kept this point well in view in designing their Otto engine, which is illustrated at figs. 147–149. Fig. 147 is a side elevation of the engine with part of the cylinder in section to show the valve arrangements. Fig. 148 is a plan and fig. 149 is an end elevation. Here port surface has been practically abolished, as the valves are placed so as to open directly into the cylinder. The exhaust valve 1 and the charging valve 2 are carried in separate turned sleeves, which fit into bored recesses terminating at their inner ends in conical valve seats. The sleeves are held up to their respective conical seats by a bridge piece 3 screwed on by the single nut 4. The ends of the bridge piece bear upon the ends of the sleeves, and on screwing up the nut 4 both sleeves are firmly pressed home. The valves are pulled to their seats by the spring 5 which also acts by

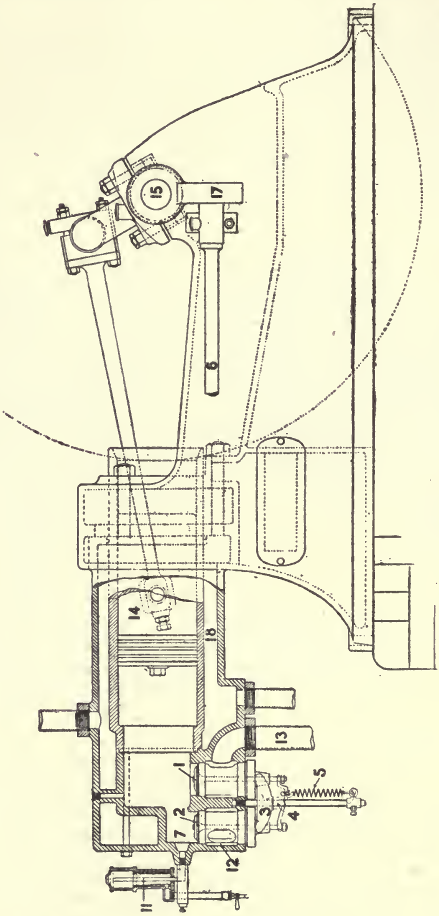

FIG. 147.—Barker's Otto Engine (elevation).

a bridge or stirrup. The valves are opened by levers 6, one of which, the admission valve, is here seen in the end elevation, fig. 149. The levers are operated by cams on the usual two to one shaft.

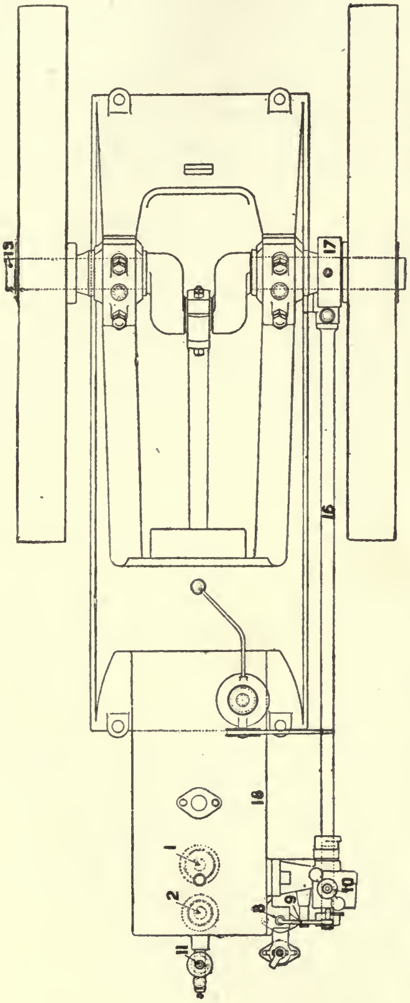

Leading Dimensions.—Diam. of cylinder, 10″; length of stroke, 20″; diam. of exhaust valve, 3″; diam. of feed valve, 3″; crank shaft diam. 4″; diam. of side shaft, $1\frac{5}{8}''$; exhaust pipe diam. $2\frac{1}{2}''$.

List of Parts.—Exhaust valve, 1; feed valve, 2; bridge piece, 3; bridge piece nut, 4; exhaust and feed valves spring, 5; feed valve lever, 6; ignition cavity, 7; gas valve, 8. gas valve lever, 9; governor, 10; ignition tube, 11; air supply annulus, 12; exhaust pipe, 13; piston, 14; crank shaft, 15; side shaft, 16; worm gearing, 17; water jacket, 18.

Fig. 148.—Barker's Otto Engine (plan).

By this arrangement the upper surface of the exhaust valve 1 forms part of the interior surface of the cylinder, and so far as the exhaust valve is concerned the prejudicial port surface is abolished. The charging valve 2 also opens directly into the cylinder, but here it has been found advisable to allow the charge to enter the cylinder by way of a recess or cavity 7; this recess, however, is very open, and does not appreciably increase the cooling surface. It has been found desirable to have a cavity 7 in order to make certain of pure inflammable mixture for the igniting tube. This is the more necessary as the igniting tube operates without requiring a timing valve.

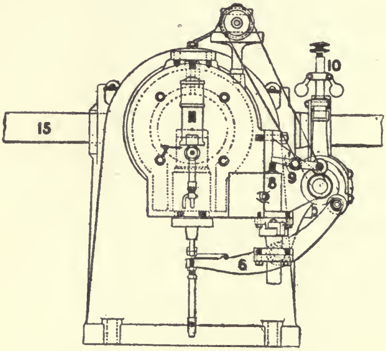

FIG. 149.—Barker's Otto Engine (end elevation).

The gas valve is shown at 8, fig. 149, and it is operated by the lever 9, the governor 10 controlling the gas supply in the usual manner. The ignition tube 11 remains at all times open to the engine cylinder, and the time of ignition is adjusted by the position of the incandescent part of the tube. To vary this position the Bunsen burner is moved upwards or downwards as required. A very accurate adjustment of ignition is obtained in this way.

The air supply is admitted to the annulus 12, and it passes through apertures in the sleeve carrying the admission valve. The exhaust gases are discharged by way of the pipe 13.

The engine illustrated is of 12 HP nominal, and it gives excellent results, as may be seen from the accompanying diagrams, figs. 150 and 151. Fig. 150 is a diagram taken with the engine fully loaded, and fig. 151 with the engine running light without load. The timing of the ignition when running without load is as perfect as when full load is carried. These two diagrams prove that the open tube igniter without timing valve is quite capable of producing accurately timed explosions under widely varying conditions of temperature and composition of mixture.

Diagrams and Gas Consumption.—An engine of the kind illustrated was tested at the Saltley Gas Works of the Birmingham Corporation at the beginning of 1894 by Mr. J. W. Morrison. Fig. 152 is one of the diagrams then obtained with the principal results of the test marked under it. From this it appears that the engine consumed as an average of four experiments 21·3 cb. ft. of gas per brake HP per hour, or 17·2 cb. ft. per IHP hour. This is an admirable result with Birmingham gas. As the compression was only 50 lbs., it is evident that much of the efficiency of the engine was due to the very good arrangement of the combustion space and valves. This engine was designed for Messrs. Barker by Mr. F. W Lanchester. In the author's opinion Mr. Lanchester is to be congratulated on the excellence of the results. At the time the test was made the author believes the consumption to be the lowest then recorded.

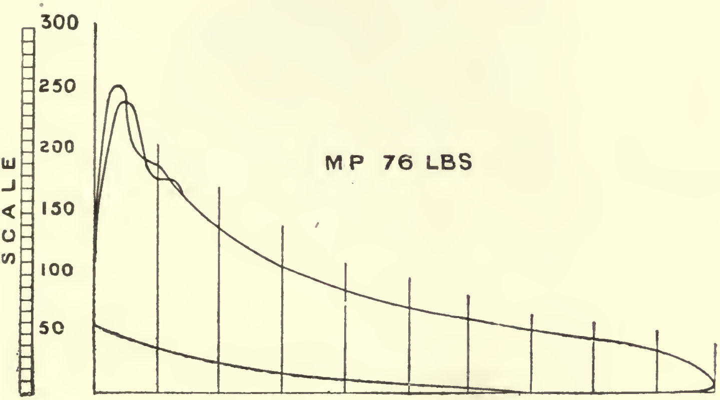

Nominal HP, 12; diam. of cylinder, 10''; length of stroke, 18'; revs. per min. 180; indicated HP, 24 4; consumpt. per IHP per hour. 18 cb. ft.; consumpt. per BHP per hour, 21·5 cb. ft.; mean pressure, 76 lbs.; max. pressure, 250 lbs.; pressure before ignition, 51 lbs.; scale of spring $\frac{1}{160}$'' per lb

Fig. 150.—Full Load Diagram. 12 NHP Barker Otto Engine.

Tangyes' Otto Engine.—The Otto gas engine constructed by

Messrs. Tangye does not appear to have any features calling for special mention. In the smaller engines Pinkney's ingenious momentum governor, described on page 235 of this work, is adapted to the Otto cycle, but in the larger engines the centrifugal governor is used. The combustion chamber also is somewhat conical instead of being cylindrical. Indeed, Messrs. Tangye appear to claim special advantages in silencing the explosion by

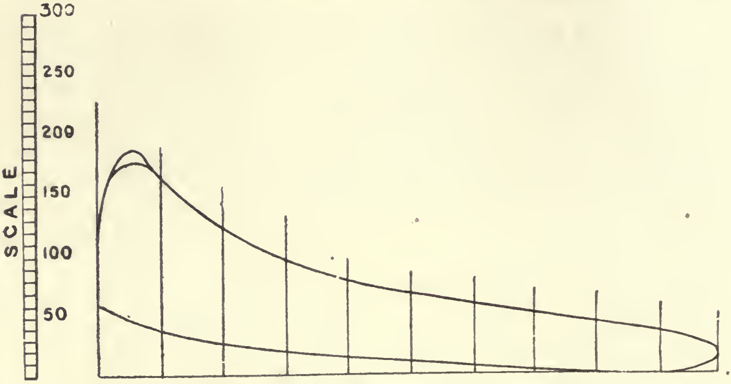

Scale of spring, $\frac{1}{180}''$ per lb.; rev. per min. 194; running light.

FIG. 151.—No Load Diagram. 12 NHP Barker Otto Engine.

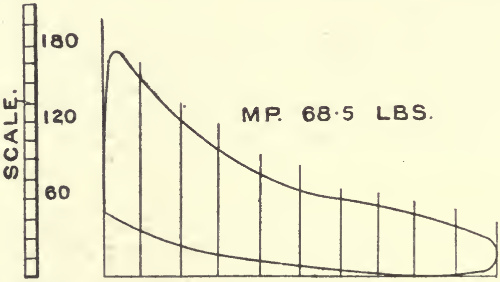

Maximum brake HP, 30; diam. of cylinder, 12″; length of stroke, 20″; indicated HP, 36·6; consumpt. per IHP per hour, 17·7 cb. ft.; brake HP, 29·8; consumpt. per BHP per hour, 21·8 cb. ft.; mean pressure, 68·5 lbs.; max. pressure, 180 lbs.; pressure before ignition, 50 lbs.; rev. per min. 207·25; scale of spring, $\frac{1}{180}''$ per lb.

FIG. 152.—Saltley Diagram. Barker Otto Engine.

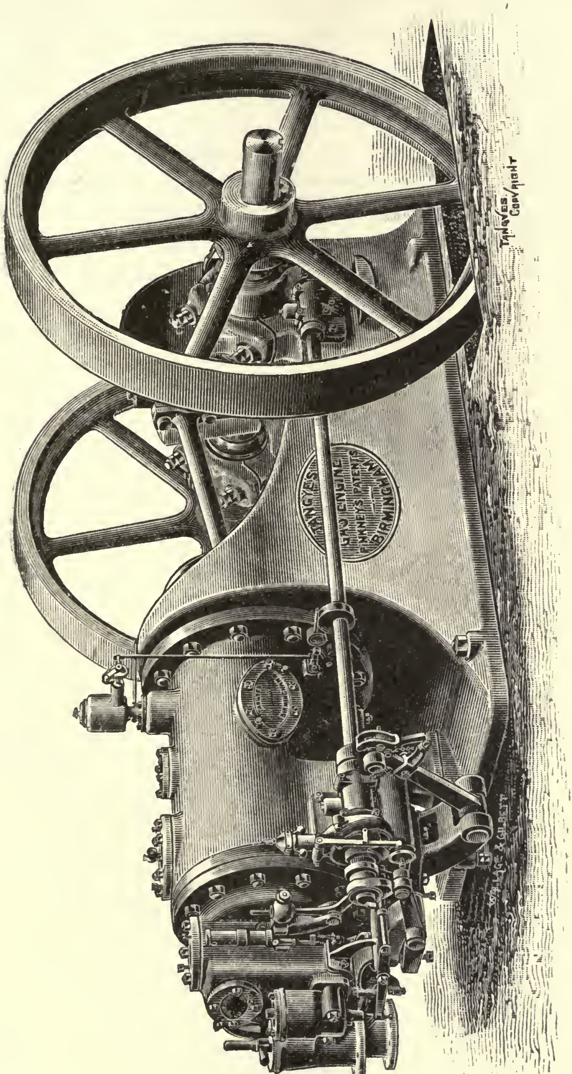

Fig. 153.—Tangyes' Otto Engine.

means of this conical shape ; no doubt a conical chamber does possess certain advantages, and these advantages were fully appreciated by the author as early as the year 1880, as may be seen by examining the section of his engine on page 187 of this work.

Messrs. Tangye's engine is well made, and the design is characteristic. Fig. 153 illustrates the general appearance of the engine, and fig. 154 is a diagram which Messrs. Tangye were good enough to send the author, giving the results claimed by them for a large gas engine.

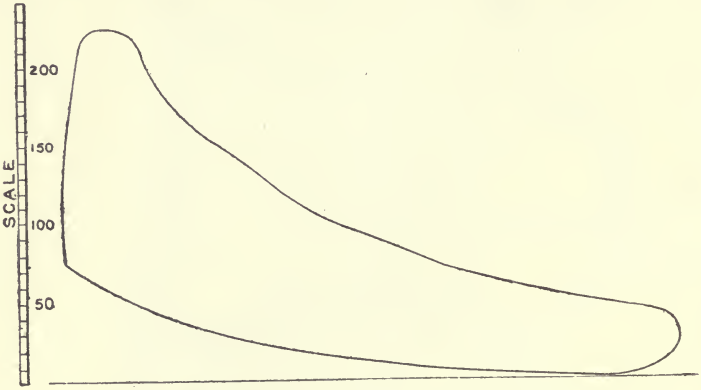

Nominal HP, 35 ; diam. of cylinder, 18″ ; length of stroke, 24″ ; rev. per min. 160 ; consumpt. per IHP per hour, 14·7 cb. ft. ; 3 explosions per cb. ft. of town gas ; mean pressure, 89 lbs. ; max. pressure, 220 lbs. ; initial pressure before ignition, 73 lbs. ; scale of spring, $\frac{1}{80}$″.

FIG. 154.—Diagram from 35 NHP Tangyes' Otto Engine.

Burt's Compound Otto Engine.—Many attempts have been made to utilise the compound principle in the gas engine in order to expand the compressed charge to a greater volume than that existing before compression. Otto, Crossley, Atkinson, Clerk and many others have experimented in this direction, but so far without success. The engine known as Burt's Acme Compound Engine is in reality an expansion engine and not a compound, as in it the full initial pressure is applied to both cylinders. That is, both pistons get the maximum pressure of the explosion ; the pistons between them, however, expand the compressed gases to a greater volume than their volume before compression, and so the engine is well worthy of study by engineers interested in some difficulties of compound gas engines.

Professor W. T. Rowden, writing on a report on the engine giving the results of a test made in Glasgow, says: 'The chief novelty in the engine is the method of obtaining expansion of the fired charge beyond the volume occupied by the mixed gases at the end of the intake portion of the cycle.

'From the *Otto and Clerk engines*, and from others which are more or less copies of these two types, the products of combustion begin to escape whilst still at a pressure of from 30 to 40 lbs. above atmosphere. The "Acme" engine secures the desired expansion in a simple manner, and the exhaust is almost noiseless. Moreover, the temperature of the exhausted gases is so reduced by the cooling effect of the expansion as to remove all danger of fire from a heated exhaust pipe. Referring to the engraving of a 2 HP (nominal) engine [see fig. 155], it will be seen that two cylinders, pistons and shafts are used, the two shafts being connected by toothed wheels, which are geared in the ratio of 2 to 1. The piston of the cylinder seen on the right, which is connected to the slow moving shaft, sweeps a less volume than the other does, besides making only half the number of strokes. This smaller volume is secured either by shortening the crank or lessening the diameter of the cylinder, or by the two combined. The two wheels are engaged so that when the fast-moving piston (on left) is at its outer and inner dead points, the other is distant from its dead points by a distance corresponding to a motion of about 45 degrees of its crank, an amount of travel corresponding roughly to one-seventh of the whole stroke. This piston regulates the firing and the exhaust by having the firing tube inserted through the cylinder at about one-seventh of its stroke from the inner dead point, and having ports opening from the cylinder at the outer seventh. Thus only one valve is required, namely, an automatic lift valve for admitting the charge of gas and air, and for preventing the formation of a partial vacuum in the cylinders when the engine misses an explosion by being governed.'

By this clever device of two pistons operated by cranks geared together in the ratio of two to one, the Acme engine succeeded in getting a considerable range of expansion beyond that given by other engines.

Figs. 156, 157 and 158 are respectively side elevation, sectional plan and end elevation of a 12 HP nominal engine. The cylinder 1 is open at all times to the cylinder 2 by the wide short port 3, and the piston A in cylinder 1 makes double the number of strokes of the piston B in the cylinder 2. The crank A^1 connects to the piston A, and the crank B^1 to the piston B; these cranks, as will be seen, have separate shafts, which are geared together by the toothed wheels C. The automatic lift valve 4 admits a mixture of gas and air to both cylinders by way of the port 5, and and this valve 4 is supplied with gas by way of the valve 6 (fig. 156). The gas valve is controlled by the inertia

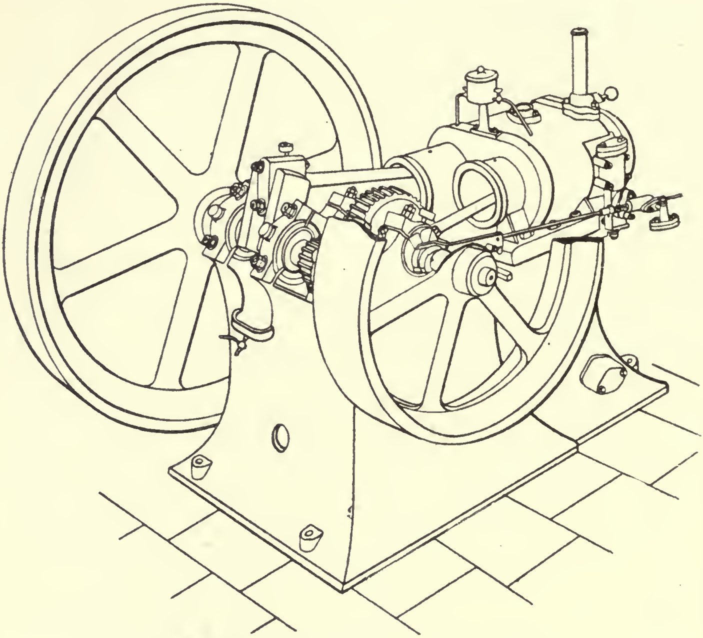

FIG. 155.—Burt's Compound Otto Engine.

governor 7, which causes the blade 8 to miss the gas valve stem 6 when it is necessary to cut out ignitions. The tube igniter 9 opens into the cylinder 2, and is uncovered at the proper time for ignition

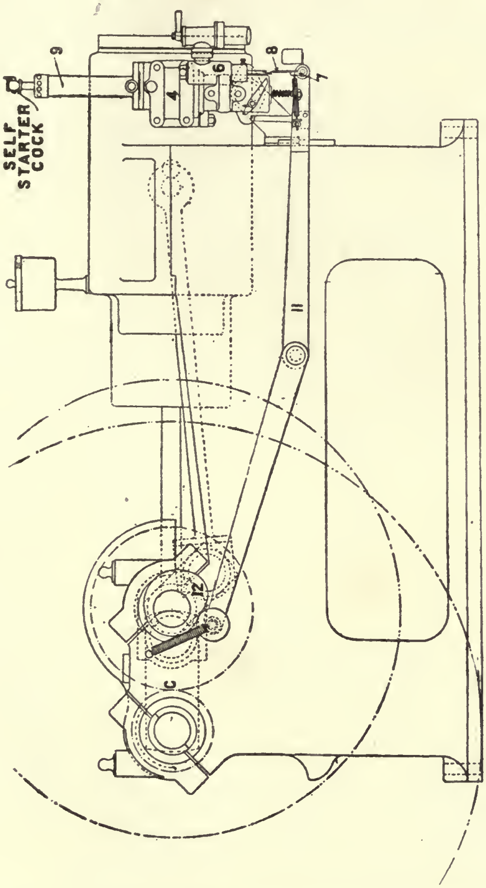

FIG. 156.—Burt's Compound Otto Engine (elevation).

by the piston B; that is about the position shown in the drawing, the piston B one-seventh on its forward stroke, and the piston A just on the in-centre. During the time the piston A is making its complete out-stroke, the piston B has moved out about $\frac{5}{7}$ of its stroke, and has uncovered the ports 10, which are the exhaust ports. These ports are cylinder ports such as were used in the Clerk engine. The pressure in both cylinders then falls to atmosphere, and the piston A makes its return stroke, while the piston B is uncovering the ports 10 and covering them again. The piston B is just closing the ports 10 when the piston A completes its exhausting stroke, and the next out-stroke of A draws into the cylinder a mixture of gas and air by way of the automatic lift valve 4, and when the out charging stroke is completed the piston B covers the igniter tube port and does not uncover it till com-

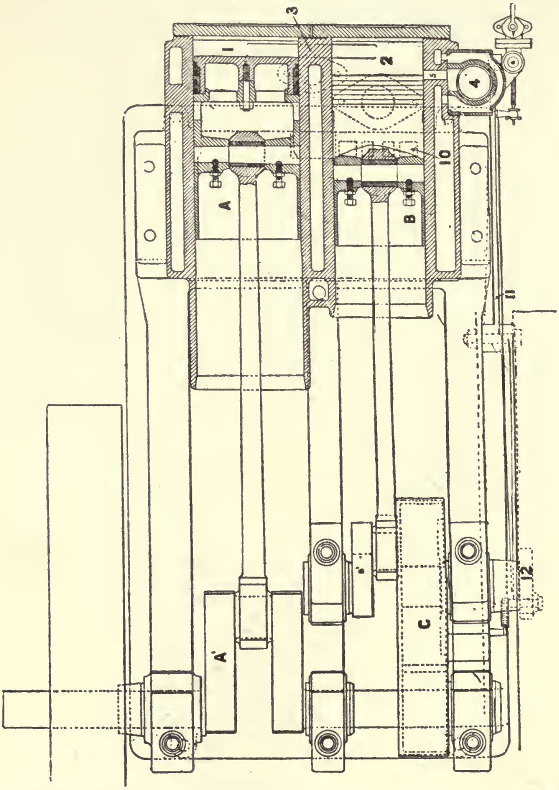

LEADING DIMENSIONS.—Short stroke cylinder, 10″ diam. × 11″ stroke; long stroke cylinder, $11\frac{1}{3}$″ diam. × 20″ stroke; both crank shafts, 4″ diam.; feed valve, 3′ diam.; exhaust port area, 10 sq. ins.; gas valve diam. $1\frac{1}{4}$″; exhaust pipe diam. 3″; air pipe diam. 2″.

LIST OF PARTS.—Long stroke cylinder, 1; long stroke piston, A; long stroke crank, A′; short stroke cylinder, 2; short stroke piston, B; short stroke crank, B′; crank shaft gearing, C; port connecting cylinders, 3; feed valve, 4; port from feed valve to cylinder, 5; gas valve, 6; inertia governor, 7; governor blade hit or miss, 8; igniter, 9; exhaust ports, 10; governor motion lever, 11; governor cam, 12.

FIG. 157.—Burt's Compound Otto Engine (sectional plan).

pression is completed. It is easy to see that by proportioning the stroke and diameter of the piston B to that of A, any desired expansion of the charge may be obtained.

Fig. 159 is a diagram from the cylinder 2, while fig. 160 is one from the cylinder 1, of a 12 HP engine similar to the illustrations, taken by Prof. Jamieson of Glasgow. The results of the test are marked under the diagram fig. 160. An examination of the two diagrams shows clearly the action of the engine. Compression begins when the piston B has nearly reached the end of its stroke and continues while the piston moves out from *a* to *b*, fig. 159, that is the piston A is compressing its charge partly into the clearance space at the end of its cylinder and partly into the cylinder 2 by way of the port 3, so that the piston B is running away from the piston A, and is being followed up by the compression. At *b* the charge ignites and the pressure rises to the same point in both cylinders, the piston B continues to move out and is followed by the piston A, which piston, however, speedily overtakes it, so that it finishes its stroke before the piston B moves out enough to uncover the exhaust ports 10 on the side of the cylinder ;

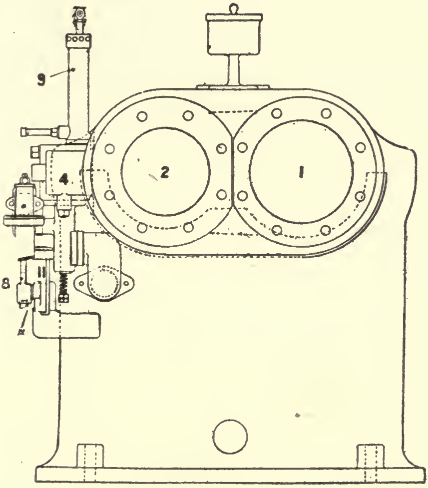

FIG. 158.—Burt's Compound Otto Engine (end elevation).

the pressure then falls to atmosphere very gently, as shown by the drop on the diagram fig. 159 at the point *c*. The diagram fig. 160 looks like an ordinary Otto diagram, but in interpreting its indications the diagram fig. 159 must be duly considered.

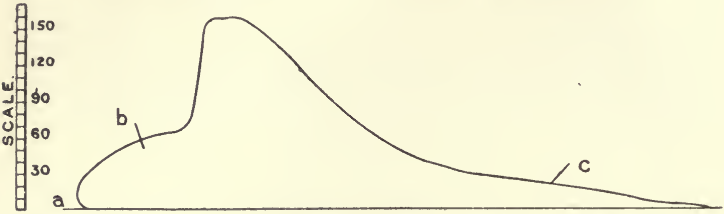

Nominal HP, 12 ; short stroke cylinder, 10″ diam. × 11″ stroke ; spring $\frac{1}{120}$″ per lb. ; max. pressure, 158 lbs. ; pressure before ignition at *b*, 48 lbs.

FIG. 159.—Diagram from Cylinder 2 Burt's Compound Otto.

According to Prof. Jamieson's test of April 8, 1892, the 12 HP engine gave 13 brake HP on a consumption of 19·3 cb. ft. per brake HP per hour of Glasgow gas.

Prof. Rowden made a test of a smaller engine of 6 HP nominal at the establishment of Messrs. Herbert Bros., corn merchants, Kennedy Street, Glasgow, and obtained 8·28 brake HP on a consumption of 17·3 cb. ft. of gas per brake HP hour, the faster crank running at 170 revolutions per minute. The 'Acme Compound' engine may therefore be taken to have consumed about 19 cb. ft. of Glasgow gas per brake HP hour ;

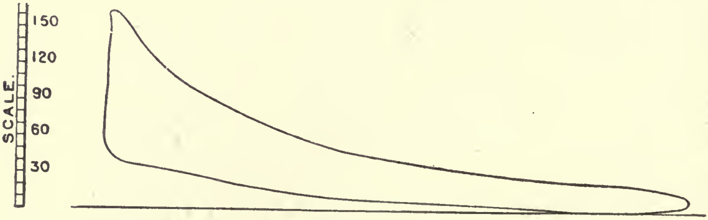

Nominal HP, 12 ; long stroke cylinder, 11½″ diam. × 20″ stroke ; rev. per min. 160 ; brake HP, 13 ; consumpt. per BHP hour, 19·3 cb. ft. ; max. pressure, 158 lbs. ; pressure before ignition, 48 lbs. ; scale of spring, $\frac{1}{120}$″ per lb.

FIG. 160.—Diagram from Cylinder 1 Burt's Compound Otto.

this corresponds to about 21 cb. ft. of Birmingham gas, so that the results are very creditable.

General Remarks.—This engine has been replaced by the Messrs. Burt's Otto engine of more usual type. The engine, although called compound, was not really a compound because both cylinders served as high and low pressure cylinders simultaneously. It seems to the author that an engine cannot be truly termed 'compound' unless it includes separate high-pressure and low-pressure cylinders. The advantages to be obtained by the compound engine in saving weight and strength of engine cannot be gained without the use of a small cylinder to operate at high pressure and a large cylinder to operate at low pressure. This engine was necessarily heavy for its power, and it had the great disadvantage of requiring gear wheels, which wheels had to take the whole strain of the explosion.

Nominal HP, 6; diam. of cylinder, 9¼″; length of stroke, 16″; rev. per min. 180; consumpt. per IHP hour, 15·03 cb. ft.; consumpt. per BHP hour, 20·808 cb. ft.; scale of spring, $\frac{1}{180}$″ per lb.; max. pressure, 171 lbs.; pressure before ignition, 69 lbs.

FIG. 161.—Diagram from 6 NHP Burt's Otto Engine.

The engine is, however, very clever and interesting, and the author has described it at some length because of some lessons it teaches, which will be referred to in a later chapter, when compounding is discussed.

Burt's Otto Engine.—Messrs. Burt & Co. now manufacture Otto gas engines of more usual construction, but instead of the ordinary lift valves they adopt a piston valve driven from the valve shaft by a small crank. They obtain fair results with those engines, as will be seen from diagram fig. 161, in which a 6 HP engine shows a consumption of 15·03 cb. ft. of Glasgow gas per IHP hour, and 20·8 cb. ft. per brake HP hour. It is to be kept in mind that Glasgow gas is of higher heat value than most samples of English gas, but it is not so high now (1895) as it was in 1885, as the standard has been reduced.

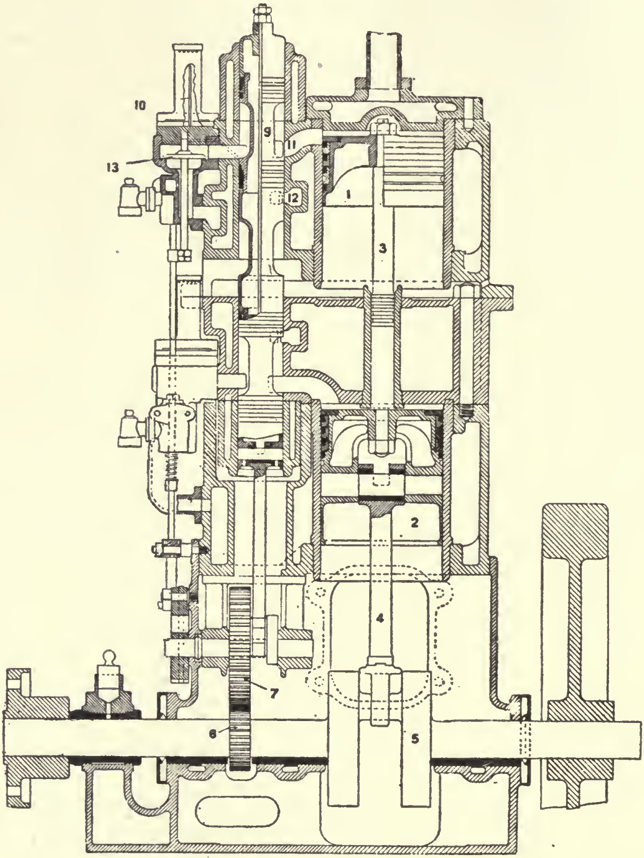

FIG. 162.—Burt's High Speed Otto Engine (vertical section).

Messrs. Burt & Co. have recently built a high-speed gas engine, of which a vertical section is given at fig. 162, which is especially interesting, as it approaches so closely to steam engine lines. Two pistons 1 and 2 are arranged tandem fashion on the same piston rod 3 ; a common connecting rod 4 serves for both and actuates a crank 5. The upper sides of the pistons are used for the power impulses, and the lower sides operate idly moving air to and fro ; both pistons operate on the Otto cycle, but the impulses are arranged to alternate. The crank thus gets an impulse at every revolution when the engine is under full load. The crank shaft carries a wheel 6 gearing into a wheel 7, from which the piston valve is driven at half the number of strokes of the main crank. The action and function of these piston valves are very peculiar. The pistons 1 and 2, it will be seen, approach their cylinder covers as nearly as steam engine pistons, and the main combustion space is formed by the ports and passages leading to the valves, and also by the annular space formed between the piston valve stems 9 and the cylinder. When the upper piston 1 is in the position shown in the figure, it will be seen that the cylinder is open to the annular space formed round the piston valve stem 9, and between the piston ports of the valve. These spaces form the combustion chamber, and the explosive mixture is compressed into them and ignited by the tube igniter 10. When the piston 1 has made its power stroke down, the piston valve moves to bring into connection the ports 11 and 12, and the piston 1 then moves up and discharges the exhaust products ; on the next down stroke the piston valve again takes the position shown by the upper valve, and the lower valve 13 is opened to admit a charge of gas and air on the next down stroke. The piston 2, as shown on the drawing, is just finishing its exhausting stroke, and the piston valve is about to close the exhaust port. The valve arrangements of piston 2 are similar to those of piston 1.

This engine is most interesting for many reasons ; its designers are very daring, and appear to the author to disregard some of the understood conditions of gas engine economy. It appears to him impossible to obtain any high economy in gas consumption from an engine with its combustion spaces made up of tortuous ports and passages. The engine gives the designer an extreme example in the direction of subdividing the combustion space, and it will certainly be interesting to know its power and gas consumption. Fig. 163 gives diagrams taken from the top and bottom cylinders at 400 and 480 revolutions respectively.

Robey's Otto Engine.—Messrs. Robey & Co. now build Otto engines up to a brake power of 120 horse.

Figure 164 shows their engine as made from 36 brake horse to 120; the bed of the engine is of the Corliss type, and like all this maker's engines the design is pleasing and workmanlike. The exhaust valve opens directly into the combustion chamber, and so avoids port clearance spaces. This valve is removed by lifting a cap placed on the upper side of the cylinder and pulling the exhaust valve through, after removing the lever connections.

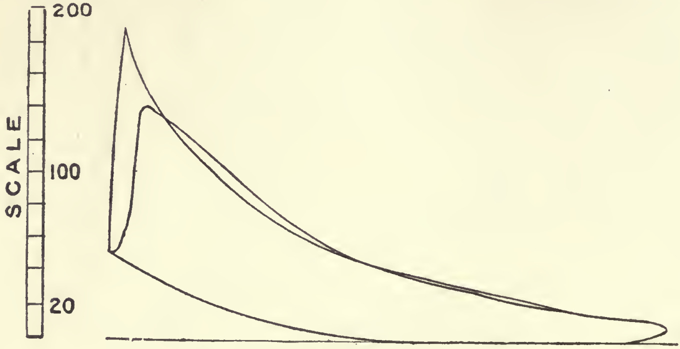

Top cylinder, 400 revs. per min.

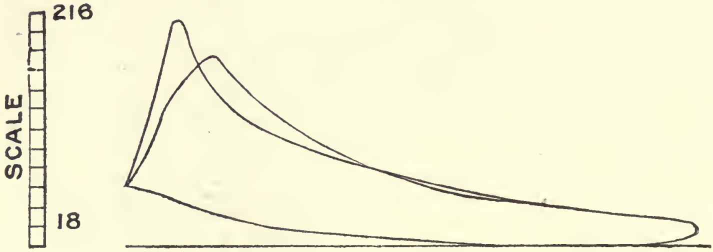

Bottom cylinder, 480 revs. per min.

FIG. 163.—Diagrams from Top and Bottom Cylinders, Burt's High Speed Engine.

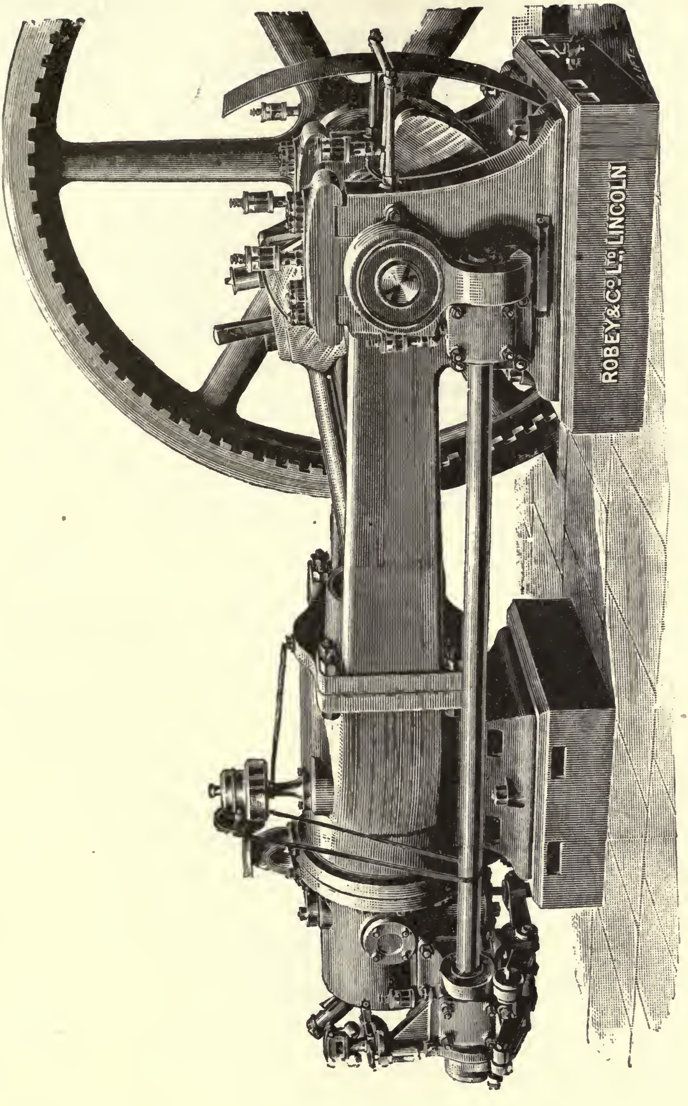

Fig. 164.—Robey Otto Engine, 120 BHP.

The charge inlet valve opens into a port at the end of the combustion chamber, and it also is removed by way of a cover placed above it. This system avoids the use of heavy sleeves which require to be taken out from below: such sleeves being very inconvenient in large engines.

Ignition is effected by an incandescent tube, controlled by the usual timing valve. Messrs. Robey use a compression pressure of 60 lbs. per square inch.

Wells Brothers' Otto Engine.—Messrs. Wells Brothers build Otto cycle engines up to 120 HP. They make their engines of three main types; the smaller engines up to and including 16 nominal HP are made on the usual Otto cycle without scavenging; engines of 20 nominal HP and above are made with a scavenging arrangement to displace the exhaust products. The front end of the piston is enlarged and forms an annular cylinder which serves as an air pump. On the return stroke the air is discharged from the annulus, and passed through the combustion space of the cylinder so as to displace the burnt gases by pure air. For ordinary work the engine is made with a single cylinder, but for electric lighting two cylinders are used arranged in tandem. Fig. 165 shows in elevation an engine of the tandem type capable of indicating 120 HP with Dowson gas. The engine is constructed and operates as follows. The front motor piston has a large end which works in the bored bedplate; to this end the connecting rod is attached, so that it acts as a guide block. Two side rods are secured to the end and passed backwards alongside the cylinder liner through a passage way cast in the water jacket: thence they pass through bushes having light spring rings and secured at their rear ends to the crosshead of the back piston. The large piston acts as an air pump, but a free passage to the atmosphere is provided during the first part of the back stroke, so that the air intended for scavenging is only compressed and passed through the combustion chamber towards the end of the exhaust stroke. As the cylinders make exhaust strokes alternately, and the large piston forces air through the air passage leading to both cylinders at every back stroke, the air is discharged through whichever of the motor cylinders is in its exhaust stroke.

The governor is of the high speed spring loaded centrifugal

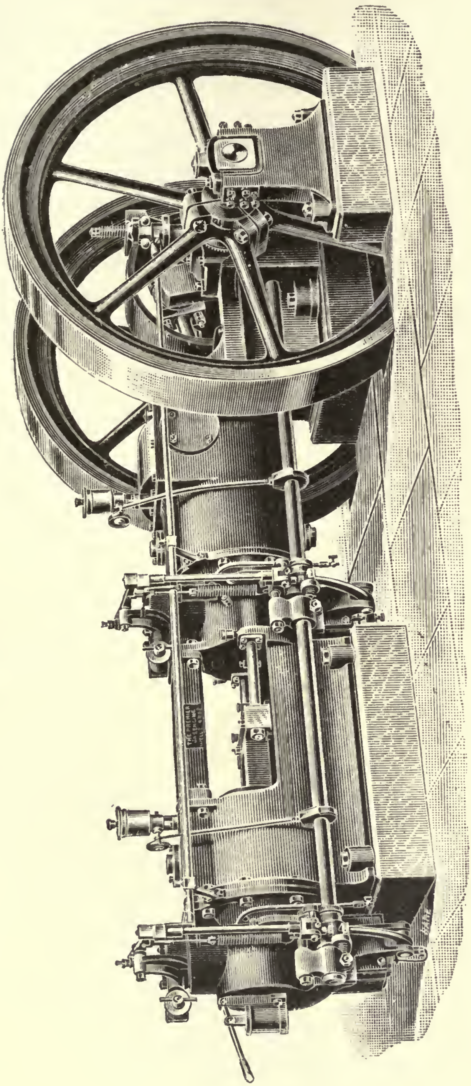

Fig. 165.—Wells Otto Engine Junction Cylinders, 60 BHP.

type, and is driven by a bevil wheel on the crank shaft; it controls upright hit and miss rods in such a manner that the gas is cut out from one cylinder before the other. The proportion of gas admitted is also varied between narrow limits by graduated notches, which determine the lift of the gas valves. The engine has two flywheels and outside adjustable bearings, positive ratchet feed lubricators for the cylinders, and an oil box on the splash guard, and sight drop feed supply to the main bearings and to the crank pin by a centrifugal oiler. This engine is interesting, and it gives economical results. Messrs. Wells have supplied the author with the following particulars of a test made in their workshops with Nottingham coal gas:

TEST OF A 60 BHP WELLS TANDEM ENGINE.

Diameter of cylinders		12 inches
Stroke		18 ,,
Speed		164 revs. per min.
Explosions	front	82 per min.
	back	78 ,,
Mean effective pressure		90 lbs. per sq. inch
Load on brake wheels		578 lbs. nett
Circumference brake circle		22·3 feet
Gas consumption per hour		1,190 cubic feet
Indicated horse power		73·9
Brake horse power		64·0
Gas per IHP per hour		16·1 cubic feet
Gas per BHP per hour		18·6 ,,

These results are very satisfactory, and prove Messrs. Wells' engine to be an economical one.

Fielding & Platt's Otto Engine.—Messrs. Fielding and Platt build Otto cycle engines up to 200 indicated HP, the larger engines being of the tandem type. From the largest engine they obtain 170 brake horse power at full load, and by their system of governing for electric light purposes they claim that the maximum speed variation between running light and full load does not exceed three per cent. To accomplish this the engine is governed without cutting off the gas; power impulses are given continuously, but reduced in strength to meet the variation in load. The gas and air supply valves are regulated separately, the governor reducing the gas and air simultaneously. The combustible mixture supplied to the engine is thus kept practically constant as to the relative amounts of gas and air, but the volume supplied is diminished and so reduces the compression. The compression varies from about 5 lbs. above atmosphere to 60 lbs. and accordingly the explosion diagram varies within wide limits, so wide indeed that it is never necessary to miss impulses. The consumption is of course increased per indicated HP for light loads, but there are many cases where such increase is quite permissible. The idea is one worthy of consideration where great regularity is required.

Self-starting Gear.—Before leaving the mechanism of the Otto cycle engines, it is desirable to describe shortly the starting gears which are now used for such engines. The great increase in the power of the engines manufactured has made it imperatively necessary to provide starting devices which dispense with the old method of starting by hand.

The first gas engine starting gear introduced in this country was the invention of the author, and was applied to the Clerk impulse-every-revolution engine, as described at p. 239 of the earlier part of this work. That starter required to store up air or gas and air mixture under compression, and this was found to involve expensive arrangements, so that although the gear was quite satisfactory in action its first cost was too high.

The starting gear now the most extensively used is also the invention of the author; the patent has been acquired by the Messrs. Crossley, and the Clerk starter is now used by them in all engines of sufficient dimensions to require a starter.

Fig. 166 is a diagrammatic section illustrating its action. A is the gas engine cylinder; B a check valve opening into the exhaust port; D a chamber connected by the pipe D^1 to the valve B; and I is an igniting valve. K is a port leading to a charging pump.

The object of the device is to fill the combustion space of the engine with a compressed mixture of gas and air, and then to explode that compressed mixture and so provide a high-pressure explosion to give the starting impulse.

To start: the engine crank is placed well off the centre; the pump is operated by hand to fill the chamber D, pipe D^1 and cylinder A with gas and air mixture at *atmospheric pressure*, so that no resistance is experienced during the operation of the pump. After charging, the igniter is operated, and the mixture in the chamber D ignites at the end near I; the flame as it spreads through the chamber forces the unburned mixture before it into the pipe D[1] through the valve B into the cylinder A, so that when the flame arrives at the valve B it has swept before it into the cylinder all the unburned mixture, and when the flame passes the valve B it ignites the compressed mixture in the cylinder and produces a high-pressure explosion which starts off the engine with an ample margin of power to overcome the friction of belting and shafting.

In conjunction with Mr. F. W. Lanchester the author has

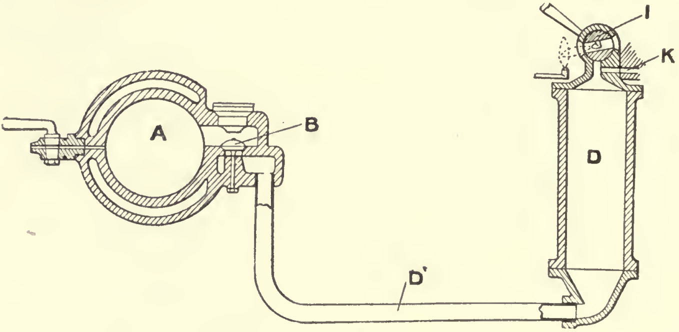

FIG. 166.—Clerk Flame Starter.

produced a modification of this starting gear which is known as Clerk-Lanchester starting gear, and it is illustrated in diagrammatic section at fig. 167. In this arrangement the igniting valve Y is adopted, which is the invention of Mr. Lanchester. The pump for charging the starting chamber is also dispensed with.

The action is as follows: When the engine is stopping, while it is making the last few revolutions with the gas turned off, the valve W is opened and air is drawn through the chamber D by way of the valve Y at every suction stroke. The chamber D, pipe D′ and cylinder A thus become filled with pure air at atmospheric pressure. When the engine is to be started the gas cock F is opened and gas flows from the gas main pipe at G into the chamber D and at H into the pipe D′, a cock on the cylinder being opened to allow flow into the cylinder, or the exhaust valve is held slightly open. The flame X burns across the valve Y, and after a few seconds mixture of gas and air escapes through Y and burns in the air. The cock F is then closed, and the flame shoots back past the valve Y, and so ignites the mixture within D, closing the valve Y against an upper face by the force of the explosion. The flame then proceeds along D, D′ into the cylinder A, firing the mixture it has compressed before it, and so the engine is started by a compression explosion.

Fig. 168 is a starting diagram obtained from this arrangement.

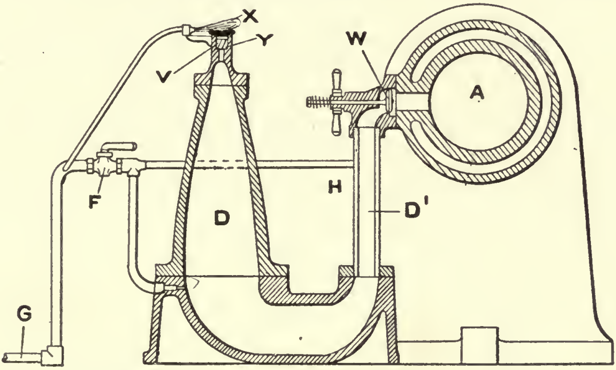

FIG. 167.—Clerk-Lanchester Starter (diagrammatic section).

From the diagram it will be observed that a maximum pressure of 200 lbs. per square inch is attained, giving an available starting pressure of 80 lbs. per square inch, a pressure amply sufficient to start a gas engine, even allowing for the friction of a line of shafting.

The great advantage of the Clerk or Clerk-Lanchester starter is due to the ease with which a compression explosion is obtained without the necessity of storing up compressed gases or compressing gases by manual labour.

The Lanchester low-pressure starter is also extensively used when it is not considered necessary to obtain a high-pressure explosion. Fig. 169 is a diagrammatic section of this starter, and fig. 170 is an indicator diagram showing the first and succeeding starting explosions. The Lanchester low-pressure starter is undoubtedly the simplest gas engine starting device which has ever been produced. It requires no addition to the engine save a gas admission cock and jet, and a mixture sampling and igniting cock.

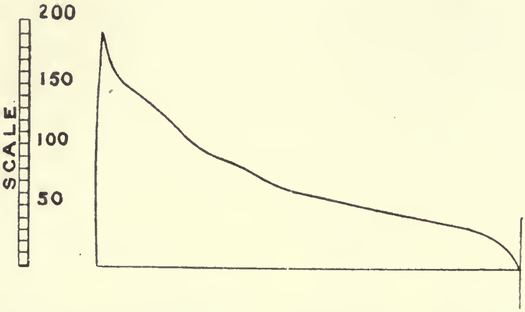

FIG. 168.—Clerk Starter Diagram. Initial pressure, 200 lbs. per sq. in. Average available pressure, 80 lbs.

The engine cylinder A has mounted upon it the sampling and igniting cock 1 shown on a larger scale in section at 2; the cylinder is also supplied with a gas admission jet 3, fitted with a cock.

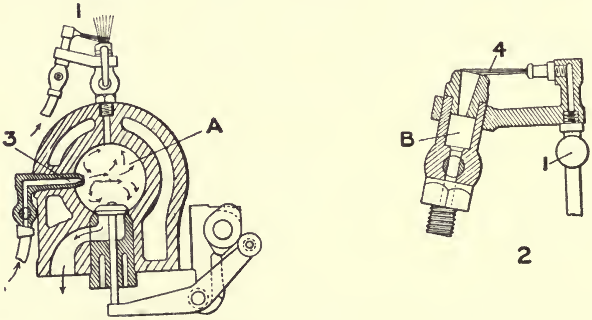

FIG. 169.—Lanchester Starter (diagrammatic sections).

When the gas is shut off to stop the engine the cylinder is filled with pure air, and so it remains filled with air at atmospheric pressure. When the engine is to be started, the crank is set well above the centre, the cock 3 is opened to the gas supply, the cock 1 is also opened and the jet 4 is lit; the gas then flows into the cylinder A, mixing with the air in the cylinder and displacing some air through the valve chamber B (section); in this chamber B is fitted a double-seated valve, which usually by its weight rests upon the lower seat; grooves are cut round it and along its lower face to allow gases to flow past it while it rests on its lower seat. When the gas jet is first turned on air only flows through, but after a few seconds gas mixture follows and is ignited by the jet 4. The mixture burns as shown, and as it becomes richer in gas the flame changes its colour and burns with a sharp roar; the cock 3 is then turned off, and the flame shoots back into the cylinder and ignites the mixture existing at atmospheric pressure within it. The explosion at once slams the valve B against its upper seat and so closes it. The engine then starts under the pressure of the low-pressure explosion.

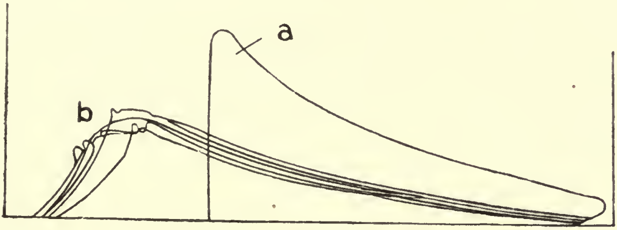

FIG. 170.—Lanchester Starter Diagrams.

At fig. 170 the diagram *a* shows the first explosion, and it will be observed that other diagrams *b* follow the first explosion. These explosions are produced by the action of the igniter. When the engine moves by the first explosion, the piston on its return discharges the exhaust in the usual manner; on the next out-stroke it takes in the usual charge of gas and air. On the next return stroke, however, which would be the ordinary compressing stroke, the exhaust valve is held open during the whole stroke, and so the combustion space is left at the end of the stroke filled with a mixture of gas and air under no compression. During this back stroke some of the mixture flows through the jet 1, and is ignited at the flame, and so soon as the piston begins to move out again the flame shoots back, and another low-pressure explosion occurs, as shown at *b*, fig. 170. In this manner a series of low-pressure explosions are obtained sufficient to get up the speed of the engine to a point at which the compression may be safely applied and the engine caused to perform its ordinary cycle. The Lanchester starter is much used, and is very successful when the friction of the engine and its connections is not too great.

Other Self-starting Devices.—The Lanchester and Clerk starters may be taken as the typical starters of to-day, and they are applied much more extensively than any other types. Most makers, however, now supply with their engines self-starters of some kind.

Messrs. T. B. Barker & Co. and Messrs. Robey & Co. use the Lanchester starter. Messrs. J. E. H. Andrew & Co. also employ a low-pressure starter which resembles Lanchester's in its leading features. The igniting device is connected with the ordinary igniter tube. Fig. 138, page 320, shows this arrangement in section. The igniter tube G is fitted with an internal directing tube communicating behind the timing valve F. A gas supply cock with its jet somewhat similar to 3, fig. 169, is applied to the engine cylinder. When it is desired to start, the engine crank is set well off the centre as usual, the tube G is heated to incandescence and the valve A fig. 138 is opened to the atmosphere. The valve F is also opened in towards the cylinder. Gas then flows into the cylinder, mixes with the air within it as with the Lanchester device, and in entering it displaces air first and inflammable mixture afterwards past the valve F up the internal directing tube into the igniter tube G, then away in the direction shown by the arrows to the valve A and past that valve to the atmosphere. When the mixture becomes inflammable enough, the gas supply is cut off and the igniter tube ignites the mixture, then the valve A closes upon explosion. By this neat device Messrs. Andrew obtain their low-pressure starting explosion. The whole arrangement resembles Lanchester's except in the rather neat device for utilising the ordinary igniter tube C to obtain the starting explosion as well as the ordinary explosions.

Messrs. Tangye adopt a somewhat more complex method of starting; they set the engine crank on the in-centre, then pump a mixture of gas and air into the cylinder till the pressure approaches the usual pressure of compression; they then simultaneously move the crank off the centre and admit the compressed charge to the igniter. They thus start with a compression explosion. This starter, it appears to the author, is open to the objection that in the event of a slight leak in the piston the man operating the hand pump may be unable to pump fast enough to obtain the necessary compression.

Messrs. Fielding & Platt utilise a starter which in one feature resembles the old Clerk starter described on p. 239. They cause the engine to compress air into a reservoir to a pressure of about 60 lbs. per sq. inch and store this pressure up till wanted. To start, the engine is put off the centre and the cylinder is filled with pure gas or a mixture at atmospheric pressure so rich in gas that it is non-explosive. The air under pressure is then admitted to the cylinder and forms an explosive mixture under pressure, which mixture is ignited in the usual way by an igniter tube to give the starting explosion.

CHAPTER III.

THE PRODUCTION OF GAS FOR MOTIVE POWER.

It has been already pointed out by the author in the earlier part of this work, that the unit of heat supplied in the form of ordinary coal gas is more costly than the unit of heat supplied in the form of coal, and that accordingly the gas engine remains at a disadvantage as compared with the steam engine till the time comes when the gas unit of heat costs no more than the coal unit. This fact has been recognised by many inventors, and numerous attempts have been made to produce cheaper gas. Mr. J. E. Dowson, however, is the only inventor who has made much headway in this subject, and his producers are now largely employed for generating gas for gas engines of large powers. Mr. Dowson has, however, only effected a partial solution of the problem, as his producers can only use two kinds of fuel, anthracite and coke. Of the two his producer acts better with anthracite; with coke its performance cannot be said to be entirely satisfactory. The disadvantage of more expensive heat unit is not felt in small gas engines, because the governing of the engine and the heat efficiency is so much superior to any small steam engine that even in actual expense of fuel the gas engine is superior. The attendance required is also trifling compared with the steam engine. Accordingly it is quite unnecessary to trouble about gas other than towns gas for engines under twenty horse power. Engines giving out that power or any power above that and working steadily at full load require cheaper gas to compete with the steam engine. It would not be difficult, for example, to work a steam engine giving 100 horse power at 3 lbs. of coal per IHP hour, the coal costing not more than 10*s.* per ton; this gives an expenditure for coal of 0·16 penny per HP hour. A gas engine of 100 horse power would use about $1\frac{1}{3}$ lb.[1] of anthracite costing 20*s.* per ton, and here the fuel would cost 0·15 penny per HP hour. That is, assuming that the gas engine and producer cost as much for attendance, repairs and oil as the steam engine and boiler of corresponding power, it would just compete favourably with a steam engine using 3 lbs. of coal per indicated horse power. The gas engine, however, has a considerable advantage even when supplied by gas producers in working at light loads, and its consumption at such loads is proportionately less than the steam engine. If, however, gas producers could be made which would effectively produce gas from cheaper fuel, or fuel such as the slack generally used for steam boilers, then the gas engine would have an overwhelming superiority over the steam engine from a pecuniary point of view in large engines as well as small.

The gas producer problem is, therefore, one which will doubtless very considerably exercise the attention of inventors. Accordingly the author will now shortly discuss the principles of the subject, and then describe the Dowson and another producer and some of their difficulties.

Ordinary town illuminating gas is produced by the destructive distillation of suitable coal. The object of the manufacturer is to produce a gas capable of burning with a bright illuminating flame. It is a purely accidental circumstance that such illuminating gas has also been found very suitable for generating motive power. Accordingly, it is not to be expected that coal gas should be generated under the best economic conditions for cheap motive power. Gas-making coal is necessarily more expensive than the fuel ordinarily used in steam boilers, and further the process of destructive distillation can only liberate from the coal such volatile matters as enter into its composition. The amount of gas so obtained per ton of coal depends on the temperature of distillation, or the temperature of carbonisation as the gas engineers call it. At a comparatively high temperature a larger volume of gas is given off per ton, but the percentage of illuminating gases present are reduced, and so the illuminating power is low. A good gas coal on destructive distillation will yield at a fair carbonising temperature

---

[1] Under 1 lb. per IHP hour has been claimed by Mr. Dowson.

from 10,000 to 11,000 cb. ft. of gas per ton of coal of from 15 to 17 candle power, and it will leave in the retort about 62 to 73 per cent. of coke ; that is, of 100 tons of the original gas coal 38 to 27 tons are driven off as illuminating gas, vapour, tar, ammonia, water, &c., while 62 to 73 tons remain in the retort as coke. So long, then, as the ordinary process of destructive distillation is adopted, the heat unit of coal gas supplied to a gas engine must necessarily be more expensive than the heat unit evolved in the furnace of a steam boiler, because more fuel and that more expensive fuel is required apart altogether from the cost of the distribution of the gas from the gas works. To compete with the steam boiler and furnace in producing a gas heat unit as cheaply as a coal heat unit placed on the fire grate, it is necessary to convert the whole of the coal into gas suitable for use in a gas engine.

At first glance it appears a difficult problem to produce inflammable gas from solid carbon either in the form of anthracite or of coke, but the principle is simple enough. When unit weight of carbon is entirely burned in air or oxygen, carbonic acid, or more properly carbonic anhydride, is formed, that is the gas CO_2. This gas CO_2 if passed through a sufficient depth of incandescent carbon is converted into the gas carbonic oxide, which is inflammable. The chemical reaction is generally given :

$$CO_2 + C = 2CO.$$

That is, two volumes of CO_2 combined with a sufficient weight of carbon to form carbonic oxide produce four volumes of carbonic oxide gas. For the purpose of the gas engine using a properly proportioned gas generator it may be considered that the carbon used is burned to carbonic oxide only and not to carbonic acid. The heat evolved in the process of producing carbonic oxide from carbon is

Unit weight of carbon forming CO evolves 2400 heat units,

but

Unit weight of carbon forming CO_2 evolves 8000 heat units,

so that the process of the formation of carbonic oxide loses a part of the heat of the carbon, and the same weight of carbon in carbonic oxide will only produce when the carbonic oxide is burned 5,600 heat units instead of 8,000. Thus by passing air through incandescent carbon or coke of a sufficient depth, carbonic oxide gas can be formed and the whole of the carbon transformed into an inflammable gas. The air on first coming into contact with the incandescent carbon burns a portion of it to CO_2, carbonic acid gas, and this carbonic acid on passing through a further body of incandescent carbon is reduced to the inflammable gas carbonic oxide, CO. The first stage of the process evolves all the heat of combustion, and the second stage absorbs a portion of the heat so evolved. The net result is that if the inflammable gas produced be cooled down and then burned in a gas engine cylinder, the heat evolved by the combustion will only be 70 per cent. of the heat which the solid carbon would have evolved if burned directly without preliminary conversion into gas. The 30 per cent. of heat is carried away by the carbonic oxide from the gas producer, and is lost on cooling down the gas to suit it for use in the gas engine. When air is blown through the producer the nitrogen of the air of course remains, and is mixed with the inflammable CO. This is the fundamental idea of the gas producer, and accordingly it will be found that the earlier and abortive proposals for the conversion of the entire solid fuel into gas contemplated only blowing air through a sufficient depth of carbon. Taking the composition of atmospheric air as 4 vols. nitrogen and 1 vol. oxygen (the new element argon may be neglected, as it is included in the nitrogen and is very similar to it), then the best gas which could be produced in this simple manner would be that in which the whole of the oxygen was used up in forming carbonic oxide. Remembering that 1 vol. of oxygen gas after combining with enough carbon to make CO forms 2 vols. of that gas, the composition of the gas proceeding from the producer would be 4 vols. nitrogen and 2 vols. carbonic oxide, that is :

4 vols. nitrogen	= 66·6	per cen
2 vols. carbonic oxide	= 33·3	,,
	100·0	

The gas obtained would consist entirely of 66·6 per cent. of nitrogen and 33·3 per cent. of carbonic oxide ; this gas on combustion in the engine would evolve 70 per cent. of the heat of the original carbon. That is, if the efficiency of the producer be compared with a steam boiler, it would be equal to that of a boiler giving 70 per cent. of the heat of combustion in its furnace in the form of steam delivered at the stop valve.

Such a producer, however, would waste an entirely unnecessary amount of heat, and would give considerable practical difficulty in getting rid of the 30 per cent. of the heat of all the carbon gasefied in it, the lining would be overheated, and generally the temperature of the carbon contained in the producer would become undesirably intense. A certain high temperature is required, it is true, to convert the CO_2 into CO, but if that temperature be maintained it is undesirable to go above it. Gas engineers have accordingly taken advantage of another chemical reaction to use some of this heat and produce better gas. If steam be passed over highly incandescent carbon, which carbon must, however, be kept incandescent, the oxygen of the steam unites with the carbon, and the hydrogen of the steam is liberated. The ultimate effect of the reaction is to decompose steam and produce hydrogen and carbonic oxide; the reaction is as follows:

$$H_2O + C = H_2 + CO.$$

That is, 2 volumes of water vapour in contact with incandescent carbon produce 2 volumes of hydrogen gas and two volumes of carbonic oxide gas. This reaction, however, absorbs heat to produce the decomposition of the steam; more heat requires to be absorbed than is given out by the burning of the carbon to CO.

To decompose steam containing 2 units weight of hydrogen gas requires the absorption of 68340 heat units, and in producing 28 units weight of CO from 12 units weight of carbon there are evolved 28800 heat units; that is, the heat evolved by the carbonic oxide produced in the reaction is about one-half of the total heat required. This reaction cannot therefore proceed without a sufficient supply of heat from some source; the best source is the formation of CO by means of air also acting on the carbon. To supply heat just sufficient to perform the reaction would require the heat evolved in producing 1 vol. CO by air and carbon to every 0·73 vol. of CO produced by the reaction of steam on carbon. The composition of the gas so produced would be:

$$\left.\begin{array}{r}N=4\ \text{vols.}\\ CO=2\ \text{vols.}\end{array}\right\}\ \text{produced by the reaction of the oxygen of the air on carbon.}$$

$$\left.\begin{array}{r}CO=1{\cdot}46\ \text{vols.}\\ H=1{\cdot}46\ \text{vols.}\end{array}\right\}\ \text{produced by the reaction of steam upon carbon.}$$

$$\overline{8{\cdot}92}\ \text{vols. total.}$$

The percentage composition would be about :

$$\begin{array}{rr}N= & 45{\cdot}0\\ CO= & 39{\cdot}0\\ H= & \underline{16{\cdot}0}\\ & 100{\cdot}0\end{array}$$

The production of a gas of this composition assumes that all the heat is utilised for the purpose of the reaction and that none is lost from the apparatus. It assumes also that all the heat carried away by the gas after formation is returned to the air and steam which are about to perform the reaction. This is of course impossible, but the calculation has been made in order to supply a standard of comparison. Such a gas would contain the whole of the heat of the original carbon before gasefying. In an actual apparatus the carbon is placed in a brick-lined producer ignited and blown up to a good heat by a forced draught ; the producer is then closed, and steam and air blown in in definite proportions to pass through the incandescent carbon mass. The resulting gas passes away from the producer in a heated state and is cooled before being sent into the gas holder. The reaction requires a certain temperature for its continuance, so that the interior of the producer must not fall below it ; the gas is discharged at this temperature, and so a greater supply of air is necessary than that calculated to make up for the heat losses.

Dowson Gas Producer.—The Dowson gas producer at present embodies in the best way the fundamental principles and the constructive details necessary for the production of gas from solid fuel ; that is, gas suitable for a gas engine.

Fig. 171 is a diagrammatic section of a Dowson gas producer with its accompanying gas holder. Fig. 172 is an elevation part section, and fig. 173 a plan of a gas producer in its building with all the necessary parts to form a complete plant.

Referring to fig. 171, the producer consists of a cylindrical casing A lined with fire brick or fire clay, and having at the bottom fire bars *a* above a closed ash pit B ; the upper part of the generator is closed by a metal plate on which there is mounted a fuel hopper A^1 having an internal bell valve a^1 operated from the exterior. To begin operations, the upper cover is removed from the hopper A^1 and the bell valve is opened ; a fire is built upon the bars *a* and air forced through it by the steam jet *n* and the pipe N^1 ; fuel (anthracite or coke) is slowly added from above till the whole mass is incandescent and fills the producer to a depth

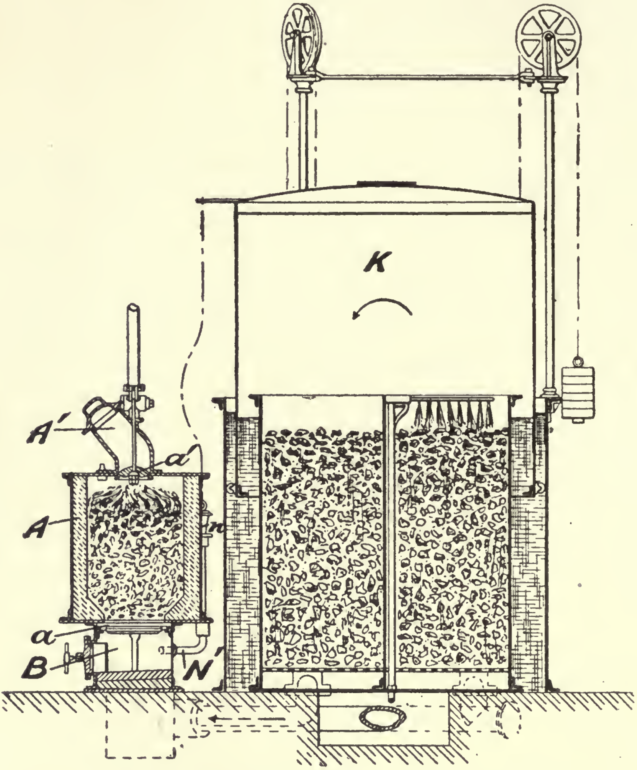

FIG. 171.—Dowson Gas Producer and Gas Holder (diagrammatic section).

of about 18 inches at least. During this heating up process, gases are given off by way of the open hopper, and they are ignited there by means of a flame. Great care must be taken not to inhale the issuing gas, as it contains large quantities of carbonic oxide and is very poisonous ; it should always be ignited when it flows into the producer room, as when burned it becomes harmless. When the fuel is quite incandescent, the inner and outer valves of the hopper are closed and the gas flows by a pipe through cooling and scrubbing devices, finally finding its way into the gas holder K through the coke scrubber formed within it. From the gas holder the gas flows through another scrubber, as

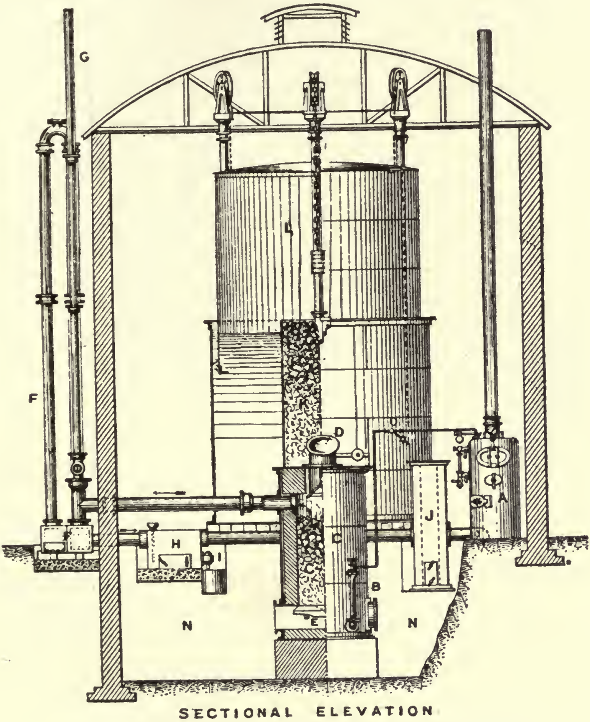

FIG. 172.—Dowson Gas Producer (part in section).

shown by the arrow, fig. 171, and thence passes to the engine. The gas holder K is of usual construction with annular water seal and balance weights, chains and pulleys.

The complete plant for 80 HP effective is shown at figs. 172 and 173, where A is the small steam boiler fitted with superheating tubes, which boiler supplies superheated steam to operate the air injector B and so forces a mixture of steam and air through the incandescent fuel contained in the gas generator C. Fuel is fed to the generator by the feeding hopper D, and the gas formed flows from the upper part of the producer in the direction shown by the arrow to the gas cooler F, whence it passes to the hydraulic box H, which box is provided with an overflow I, and thence the gas proceeds to the sawdust scrubber J, and then to the coke scrubber K contained within the base of the gas holder. In these figures, E is the generator fire grate, L the gas holder, M

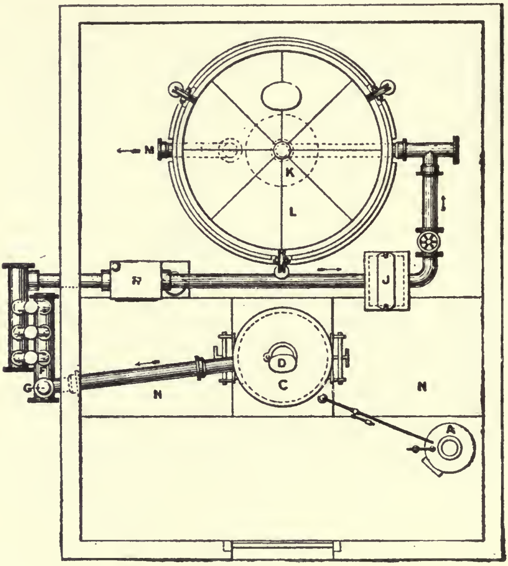

FIG. 173.—Dowson Gas Producer (plan).

the outlet from the gas holder, NN the ash pit for the generator, and O the automatic regulator to govern the production of gas by stopping or reducing the supply of steam with the upward movement of the gas holder.

From this description it will be seen that the whole plant is very simple, and the author can say from his own experience that it is easily operated and requires little repair. One man can easily attend to an 80 HP plant.

The gas produced from the Dowson producer is thus a mixture of carbonic oxide, hydrogen, and nitrogen; if all the actions were carried out perfectly there would be no carbonic acid gas present, but as all the actions are not quite up to theory some carbonic acid is formed. A little sulphuretted hydrogen is also formed, more with coke than with anthracite, and this has to be removed, as sulphur in quantity would in time act on the engine parts.

The following analysis of Dowson gas was made by Prof. Wm. Foster; the anthracite used in the producer was of the cheapest kinds in small pieces:

Analysis of Dowson gas, by volume			Standard gas (ideal)
Nitrogen, N	48·98		45·0
Carbonic oxide, CO	25·07	44·42	39·0
Hydrogen, H	18·73		16·0
Marsh gas, CH_4	·31		
Olefiant gas, C_2H_4	·31		
Carbonic acid, CO_2	6·57		
Oxygen, O	·03		
	100·00		

Comparing this with a perfect producer gas, it is seen that instead of getting 39 per cent. of carbonic oxide by volume only 25·07 is obtained; on the other hand, when the ideal gas would only give 16 per cent. of hydrogen 18·73 per cent. has been obtained, and a further 0·62 per cent. of marsh gas and olefiant gas. The marsh gas and olefiant gas are produced doubtless from the small quantity of hydrogen which forms part of the original anthracite; anthracite contains about 3 per cent. of hydrogen. The excess of hydrogen, however, in the gas can only arise from the fact that the whole of the carbonic acid originally formed is not reduced to carbonic oxide. This is evident from the fact that 6·57 per cent. of carbonic acid is present. As the burning of carbon to carbonic acid instead of to carbonic oxide involves the evolution of the whole 100 per cent. of the heat of combustion of the carbon instead of only 30 per cent. of it, it follows that more heat is left available for the decomposition of water by the coke, less carbonic oxide is formed by the action of the oxygen of the air on the carbon, and so the proportion of carbonic oxide in the gas diminishes, while that of hydrogen increases. A French analysis of Dowson gas is as follows :

Analysis of Dowson Gas produced in France.

Nitrogen, N	42·28	
Carbonic oxide, CO	18·20	45·86 combustible.
Hydrogen, H	26·55	
Hydrocarbons, $\left\{\begin{matrix} CH_4 \\ C_2H_4 \end{matrix}\right\}$	1·11	
Carbonic acid, CO_2	11·30	
Oxygen	0·47	

Here it will be observed that the nitrogen is still lower, and that notwithstanding the great increase of carbonic acid gas, 11·3 per cent. instead of 6·57 per cent., the hydrogen gas has increased from 18·73 per cent. to 26·55 per cent., while the carbonic oxide has gone down from 25·07 per cent. to 18·20. This disproportion between the hydrogen and carbonic oxide can only arise from the fact that carbonic oxide itself at a high temperature decomposes steam, so that part of the carbonic oxide which would otherwise have appeared in the mixture has disappeared, forming carbonic acid and hydrogen ; the reaction is :

$$CO + H_2O = CO_2 + H_2.$$

That this is true is evident from both analyses, where there is present a considerable proportion of carbonic acid, in one case 6·57 per cent. and in the other 11·30 per cent. ; it is to be observed that the increase of hydrogen is accompanied by an increase of carbonic acid.

It is often stated that hydrogen is a gas of greater heating power than carbonic oxide, but as a matter of fact for gas engine purposes this is not so ; hydrogen, it is true, weight for weight evolves far more heat by its combustion than any other substance, but volume for volume carbonic oxide evolves rather more heat than hydrogen. Hydrogen evolves by the combustion of 1 lb. weight 34170 heat units, or enough heat to raise 34170 lbs. of water through 1° C., but this figure includes the heat evolved on liquefying the steam, formed by the combustion, in the calorimeter, which at 637 heat units per lb. of water gives $9 \times 637 = 5733$ heat units absorbed in forming steam produced by burning 1 lb. of hydrogen. So that from 34170 heat units must be deducted 5733, that is $34170 - 5733 = 28437$.

This number 28437 is the available heat produced by the combustion of hydrogen for the purpose of a gas engine. Now, unit weight of carbonic oxide evolves 2400 heat units, and unit volume weighs 14 times that of unit volume of hydrogen, so that to get the relative heating effects of equal volumes of carbonic oxide and hydrogen this difference in weight must be allowed for. The heat evolved by unit volume of CO is therefore $2400 \times 14 = 33600$; that is, volume for volume carbonic oxide evolves 1·18 times the heat of hydrogen. Hydrogen and carbonic oxide may therefore be taken on an analysis of gases by volume to be nearly equal in gas engine value. The percentage of total combustible material may be taken roughly as representing the relative heating value of two gases : from this it appears that the French analysis of Dowson gas, notwithstanding the high percentage of CO_2, represents the better gas of the two, as the English sample has 44·4 per cent. combustible and the French sample 45·9 per cent. The French author gives the efficiency of the producer as 75 per cent.; that is, the gas will give 75 per cent. on combustion of the total heat which the original fuel would have given. If it were certain that the analysis represented the composition of the gas as it left the producer, then the efficiency could be calculated from the analysis itself; but as the gases pass through scrubbers and coolers before reaching the gas holder, and thereby lose carbonic acid and water vapour, it is impossible to calculate the efficiency of the producer with accuracy from the analysis.

Dowson gas of the composition given at page 363 requires for the complete combustion of 1 cb. ft. as nearly as possible 0·24 cb. ft. of oxygen or 1·13 cb. ft. of atmospheric air; that is, Dowson gas requires for its combustion a little more than its own volume of air. From Table III. in Appendix II. it will be seen that in samples of illuminating coal gas from twenty different gas works in Britain the proportion of air required for complete combustion varied from 5·19 vols. to 7·40 vols. of air; that is, 1 cb. ft. of coal gas required in one town only 5·19 cb. ft. of air for its combustion, while 1 cb. ft. of the gas of another town required 7·40 cb. ft. of air.

The heat evolved by 1 cb. ft. of Dowson gas is about one-fourth of that evolved by an average gas, such as Birmingham gas, so that the amount required in a gas engine cylinder is about four times what would have been required with coal gas. For a gas admitted to the cylinder in the proportion of 1 of coal gas to 8 of mixture of gas and air, it would require 4 of Dowson gas, but this would leave too little air for combustion. Consequently till very recently the diagram obtained in a gas engine cylinder from Dowson gas did not give so high an average pressure as coal gas. In ordinary practice, according to the author's experience, it was not safe to rely on an average available pressure of more than 50 lbs. per sq. in., while coal gas easily gave 70 lbs. By using, however, Messrs. Crossley and Atkinson's new scavenging engine, enough air can be introduced to burn a larger quantity of Dowson gas, so that now an average available pressure of 65 lbs. per sq. in. can be relied upon in such an engine using Dowson gas and giving about 40 IHP; in larger engines higher available pressures may be obtained, and in smaller engines lower pressures.

To secure the good and economical working of a gas engine it is absolutely necessary that the gas supplied to it should be of fairly uniform quality, otherwise the engine, which is adjusted to draw in gas and air in a fixed proportion, may at one moment be taking in a gas of such richness that the air allowed is insufficient for combustion, and at another time the gas may be so poor that the air is too largely in excess, and so a weak explosion or no explosion at all is obtained.

One of the advantages of a fixed carbon fuel, such as anthracite or coke, with little or no volatile matter, is that when such fuel is added to the generator no gases are given off by destructive distillation. In the Dowson generator, fig. 171, if such gases were given off at each charging with fuel, then they would find their way direct into the gasometer and practically fill the gasometer with gases such as CH_4, C_2H_4 and pure H to such an extent as to render the gas much too rich to be burned in the gas engine cylinder with the proportion of air allowed for the ordinary Dowson gas. The addition of anthracite or coke produces no such disturbance; further the composition of the incandescent charge in the generator remains fairly constant until it is wholly consumed, so that there is no variation from that cause. Again, if ordinary flaming coal be added to the producer, large quantities of condensible carbon compounds, such as tar, would be given off, and the scrubbing and purifying would be much more difficult. Altogether the Dowson apparatus, although it solves the problem in an easy and practical manner, limiting its fuel to anthracite and coke, does not do so for the cheaper but more troublesome fuels used under the ordinary steam boiler. The percentage of heat obtained, however, from the gas generated, 75 per cent. of the original heat of the fuel, compares satisfactorily with the efficiency of an ordinary Lancashire steam boiler without economisers.

Lencauchez Gas Producer.—The Lencauchez producer is not to the author's knowledge in use in England, but it is reported favourably upon by Professor A. Witz and others in France. It is an attempt to improve upon Dowson's producer in such manner as to save some of the heat at present lost with the highly heated gases leaving the producer, to get back in fact some of the heat which at present is entirely lost by cooling the gas; and further to make such producers suitable for use with fuel, such as slack or other fuel giving off considerable quantities of volatile carbon.

Fig. 174 is a vertical side section, and fig. 175 is a front elevation part in section of this producer. A is the gas generator lined with fire brick, B is the grate and C the closed ash pit, D is the feed hopper with upper and lower door or valves, E is a bridge passing down from above and causing the gas to flow from about the middle of the producer instead of from the top, F is the gas discharge passage, which first passes up through the brickwork and then passes up a flue or tube formed through two cylindrical

FIG. 174.

FIG. 175.

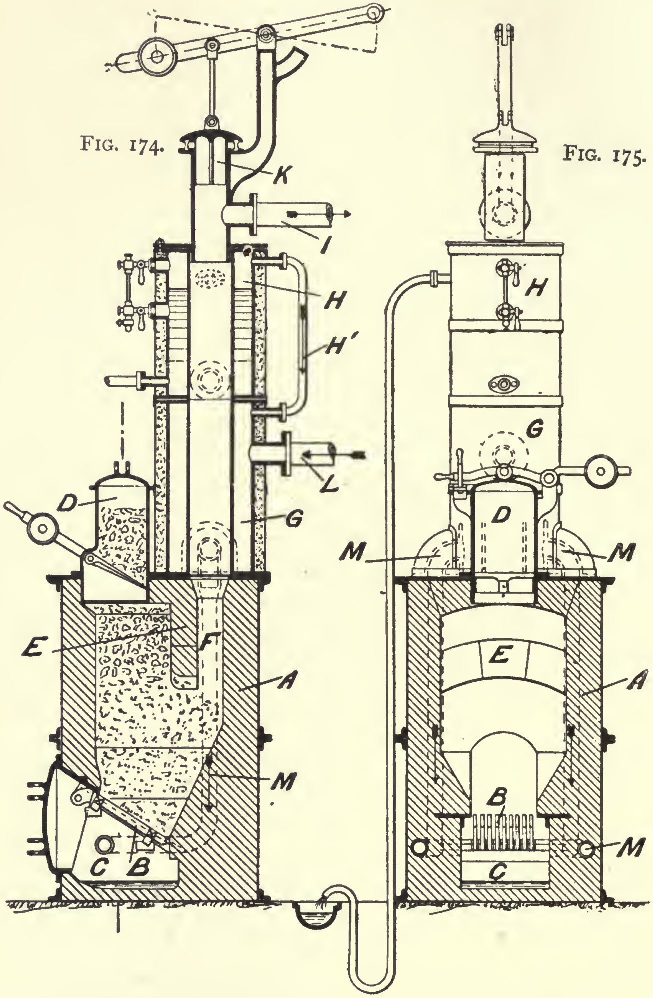

FIG. 174.—Lencauchez Gas Producer (vertical side section).
FIG. 175.—Lencauchez Gas Producer (front elevation, part section).

vessels or chambers respectively G and H. The lower vessel G is an air and steam heater, the upper is a boiler. From the upper vessel the gas passes to the gas holder by the pipe I; K is a valve at the top of the branch to allow the gas to be ignited and sampled at any time either at starting or during operation. The action is as follows: The generator is started much in the same way as has been described for Dowson, but the hot gases ascending the tube or passage F heat the vessels G and H, steam is formed in H, but without pressure, and it flows into the casing G by way of the pipe H^1: air is forced into the casing G from the pipe L by means of a fan or other positive blower, it mixes with the steam proceeding from the upper vessel and both are considerably heated, the air then flows by the pipe M shown in dotted lines to the closed ash pit C. The heated mixture of air and steam passes through the incandescent fuel in the generator, forms carbonic oxide and hydrogen and passes up the passage F. The fuel meantime which is in the upper part of the generator A is by the heat from below being subjected to destructive distillation, and the gases formed, as they cannot escape by the hopper, pass down through the incandescent fuel and then escape by the passage F with the other gases. This descent through the incandescent fuel is stated to have the effect of splitting up all the tarry matters contained in the volatile gases and fixing the gases in permanent form as CH_4, C_2H_4 and H. The fuel does not reach the incandescent part until it is thoroughly coked. By this arrangement of separating the freshly charged fuel from the incandescent fuel and passing the hot gases away from a part of the generator which contains nothing but incandescent fuel, it is stated that the difficulty of using fuels such as common slack is avoided.

The producer is ingenious and worthy of careful study, but the author is of opinion that with such fuel it will be found that the system of destroying the tar and coking the fresh fuel is not sufficiently perfect, and that dirtier gas of irregular composition will be fed to the engine. With anthracite or coke, however, the Lencauchez producer will work well and give some economy over the Dowson.

According to Richards this producer with French anthracite gives gas of the following composition:

ANALYSIS OF LENCAUCHEZ GAS (ANTHRACITE).

Nitrogen, N	47·84	
Carbonic oxide, CO	27·32	48·46 combustible.
Hydrogen, H	18·34	
Olefiant gas, CH_4	1·25	
Hydrocarbons, C_4H_4	1·55	
Carbonic acid, CO_2	3·60	
Sulphur dioxide, SO_2	0·04	
Sulphuretted hydrogen, H_2S	0·06	
	100·00	

According to Richards the loss due to gasefying is only 13 per cent.; if this be true, then the efficiency of the producer is 87 per cent., a higher efficiency than any standard test of a steam boiler. The gas is considerably better than the best analysis shows Dowson gas to be; but the author, although he can understand some advance in Dowson practice, cannot see that so much can be gained by the apparatus illustrated as to increase the efficiency from 75 per cent. to 87 per cent. However, Lencauchez' apparatus is a step in the right direction and is worthy of careful consideration.

The tar difficulty in gas producers for gas engines is a very serious one, and even with Dowson's apparatus more tarry matter reaches the engine than when town gas is used. This necessitates frequently cleaning the valves. A very little tar getting to the valves soon makes them work with difficulty, and so deranges the whole action of the engine.

Other Gas Producers.—Several gas engine makers now manufacture gas producers themselves, notably Messrs. Tangyes Lim. and Messrs. Dick, Kerr & Co. Lim., but the general principles involved are those common to the Dowson and Lencauchez producers, so that at present till more experience has been gained it is needless to discuss their points of departure. Many gas producers which are used for ordinary furnace work such as Siemens' and Wilson's, are not applicable to gas engine work because of the tarry nature of the gas given off and the comparative irregularity of its composition.

Water gas, too, is sometimes stated as useful for gas engines, but from an examination of tests with water gas plant it appears that although the gas obtained is much richer in combustible material, the loss in making it is greater than that with producer gas. Water gas is produced by blowing steam upon white hot coke, when the steam is split up, as described, into carbonic oxide and oxygen ; after a short time the carbon loses heat, and air is blown in to heat it up again. The gases leaving the generator in this blowing-up process give up their heat as they leave by passing through a regenerator, which regenerator is used to heat up the entering steam and air on the next process. In this way gas is obtained with but little nitrogen.

Water gas is extensively made in America for town supply, and in this country also it is now considerably manufactured by the gas companies to mix with ordinary coal gas.

The water gas, however, although it works a gas engine quite well, and many gas engines in America do use it, is not interesting from the point of view of competing with the steam boiler.

Fuel Consumption of Gas Engines with Producer Gas.—Mr. Dowson made a test with a Crossley Otto engine of 60 HP nominal, using his producer gas, for which he claims the very low fuel consumption of 0·762 lb. of anthracite and coke during a working test of eight hours. Allowing for the total loss of fuel in the generator standing all night and also clinkering, the consumption is only brought up to 0·873 lb. per IHP hour.

The engine was of the well-known Crossley Otto two-cylinder type. The leading particulars of the trial are as follows :

Nominal power of engine	60 HP
Diameter of cylinders	17 ins.
Length of stroke	24 ,,
Duration of trial	8 hrs. (9.40 A.M. to 5.40 P.M.).
Total revolutions of crank shaft during trial .	. 74751 = 155·73 per minute.
,, explosions in left cylinder	. 25908 = 53·975 ,,
,, ,, ,, right cylinder . . .	. 26619 = 55·456 ,,
Mean available pressure on indicator diagrams .	79·9 left cylinder. 77·9 right ,, 78·9 average of both.
Mean indicated horse power during trial . .	59·3 left cylinder. 59·4 right ,, 118·7
Mean temperature of gas in bags near engine . . .	67° F.
,, ,, air to engine	50° F.
,, ,, water overflow from left cylinder .	125° F.
,, ,, ,, ,, right ,, .	119° F.
,, ,, feed water of boiler	75° F.

Mean pressure of gas in holder	1⅝ in water.
,, ,, steam in boiler	48 lbs.
Anthracite[1] consumed in generator during trial	584 lbs.
Coke[2] ,, ,, boiler to get up steam before trial	30 ,,
Coke consumed in boiler during trial	140 ,,

Anthracite consumed during trial	0·615	lb. per IHP working hour.
Coke ,, ,, ,,	0·147	,, ,, ,,
Total	0·762	,, ,, ,,
Anthracite put in generator on morning after trial to make up for loss during 9 night hours 56 lbs.	0·058	,, ,, ,,
Anthracite put in generator on following morning after raking out clinkers &c. 50 lbs.	0·053	,, ,, ,,
Total loss during night and after clinkering 106 lbs.	0·111	,, ,, ,,
Total consumption of anthracite and coke during trial and following night	0·873	,, ,, ,,

Gas consumed[3] at rate of about 63 cubic feet per IHP per hour.

Anthracite consumed during trial, about 10 lbs.	Per 1,000 cubic feet of gas made.
Anthracite and coke consumed during trial, about 12 lbs.	

Water[4] used for cooling the engine	600 gallons per hour	= 50·5 lbs. per IHP per hour.
Water used for boiler	10 ,, ,,	= 0·8 ,, ,, ,,
Water used for cleaning gas	14 ,, ,,	= 1·1 ,, ,, ,,
Total water used during trial	624 ,, ,,	= 52·4 ,, ,, ,,

Total water used for gas-making	3·2 gallons per 1,000 cubic feet of gas made.
Oil used for cylinders during trial	1½ pint at 2*s.* 9*d.* per gallon.
,, ,, bearings ,, ,,	1½ ,, 1*s.* 4*d.* ,, ,,
Coal gas[5] used for heating ignition tubes	4½ cubic feet per hour.

Machines worked during trial.	1 pair stones (4 feet diameter)	24 elevators.
	13 ,, rolls (250 revolutions)	2 exhaust fans.
	4 ,, disks (600 revolutions)	sundry conveyors.
	14 ordinary silks	pump.
	7 centrifugal silks	shafting, &c.
	4 purifiers.	

---

[1] Anthracite used was the usual kind from the Gwaun Cae Gurwen Colliery Company, Limited.

[2] Coke from Gas Light and Coke Company.

[3] Rate of gas consumed was measured by shutting the inlet of gas holder and timing the fall of the holder through 6 feet, while the engine was working.

[4] All the water used was pumped up from the river by the engine, and run to waste. Usually the water used for cooling an engine flows to and from an overhead tank.

[5] Coal gas was used for this purpose, because Dowson gas could not be taken from the main supplying the engine, and there was no separate outlet from the gas holder.

This is a valuable test as showing the best consumptions of fuel to be obtained with Dowson gas in an engine giving off about 120 HP indicated, but it is of course lower than would be obtained in ordinary work with the plant handled by the ordinary engineer.

It is to be noted also that the level of fuel in the generator was estimated as the same at the end as at the beginning of the eight hours' test. The author considers it rather dangerous to estimate the fuel remaining in this way; great errors might easily creep in by this practice. The only accurate method is to empty the generator at the start and weigh out all the fuel for filling up and starting, then to rake out the fuel remaining and damp it out and weigh at the end of the test.

In 1890, Prof. A. Witz tested a Simplex gas engine of 100 HP at the Paris Exhibition, and found with Dowson gas a fuel consumption of 1·34 lb. of English anthracite per brake HP hour.

A recent test of an Otto engine of 100 HP with two cylinders was made at Philadelphia by Mr. H. W. Spangler, using producer gas made in a producer somewhat similar to the Lencauchez under Taylor's American patent. The efficiency of the producer was found to be 69·1 per cent.; that is, the gas produced by it would produce on combustion 69·1 per cent. of the heat which could be got by burning the original fuel put into it. The engine indicated 130 horse and consumed 1·315 lb. of coal per IHP hour. The coal used in the producer gave the following analysis:

ANALYSIS OF COAL USED IN SPANGLER'S TEST.

Moisture	4·20
Volatile and combustible carbon and hydrogen	6·88
Fixed carbon	80·41
Ash	8·51
Sulphur	0·74
	100·74

This coal is evidently inferior to English anthracite, so that the result of 1·31 lb. per IHP is very fair. Allowing for ash and moisture, the combustible matter burned was only 0·830 lb. per IHP hour.

The author tested an Otto engine recently with Dowson gas, and found in a seven and a half hours' test a consumption of

1·87 lb. of anthracite and coke per IHP. The engine indicated 23·5 horse power at 210 revolutions. Fig. 176 is a diagram from the engine on that occasion, with the leading particulars marked under it.

In this case, however, the author considers that better results would have been obtained if the producer had supplied two engines instead of one; the consumption of anthracite in the generator, about half a hundredweight per hour, was too little for maximum efficiency.

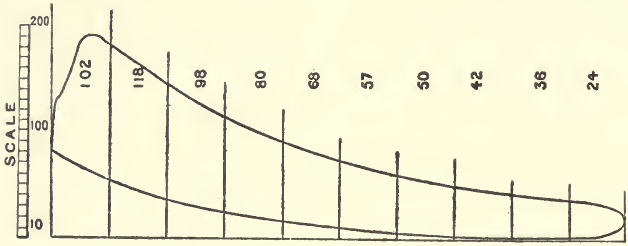

Nominal HP, 14; diam. of cylinder, 11·5″; length of stroke, $21\frac{1}{4}''$; revs. per min. 210; fuel per IHP hour, 1·87 lb. (anthracite and coke); indicated HP, 33·5; BHP, 27·5; mean pressure, 58·4 lbs. per sq. in.; max. pressure, 200 lbs.; pressure of compression, 83 lbs. above atmosphere.

FIG. 176.—Crossley Otto Scavenging Engine (diagram with Dowson gas).

From these tests, then, it may be considered as absolutely established that in ordinary work the consumption of anthracite in a good Otto engine using Dowson or a similar gas ranges from $1\frac{3}{4}$ lb. per IHP for an engine of about 30 IHP to 1 lb. for an engine of 130 IHP.

CHAPTER IV.

THE PRESENT POSITION OF GAS ENGINE ECONOMY.

In this chapter the author will discuss the fuel consumption of the gas engine at present and the economy obtained since 1886; he will examine the various causes of the advance with the object of understanding the direction of progress, and if possible of indicating the lines still open for improvement.

The Crossley Otto engine has made wonderful progress in reducing gas consumption since 1886, but for the purpose of comparison it is desirable to go back to 1882; at the latter date the Crossley engine gave an indicated horse power hour on 23·7 cb. ft. of London gas of such heating power that the indicated efficiency of the engine is $E=0 \cdot 17$, that is 0·17 of the whole heat supplied to the engine appears on the diagram as indicated work.

In 1888 the engine submitted by Messrs. Crossley for the Society of Arts trials consumed 20·55 cb. ft. per IHP hour of London gas of a heating value of 483270 ft. lbs. per cb. ft. Calculating from this and reducing the gas measurements for temperature and pressure, the indicated efficiency becomes 0·21. At the end of the year 1888 it may be taken that the best result obtainable from an Otto engine of about 17 IHP was a conversion of 0·21 of the heat given to it into indicated work.

The third test taken for comparison was made by the author at Messrs. Crossley's works, Openshaw, on August 31, 1894, on an engine of 7 in. diameter cylinder and 15 in. stroke. This engine developed at 200 revs. the great power of 12 brake horse and indicated 14 horse or a consumption of 14·5 cb. ft. of Openshaw gas per IHP hour and 17 cb. ft. per BHP hour.

Taking the heating value of Openshaw gas as 530000 foot pounds per cb. ft. at 17° C. and 14·7 lbs. pressure, the indicated efficiency is 0·25; that is, the engine converts 0·25 of all the heat given to it into indicated work. This is an extraordinarily good result, much better, in fact, than any result ever obtained before to the author's knowledge. To make certain that there was no mistake, the author had the gas meter tested and the brake weights and measurements all carefully checked in his presence.

The Messrs. Crossley have, therefore, made a very substantial improvement in the economy of gas since 1882, and it is interesting to note that each step of diminished gas consumption is attended by an *increase in compression*; this is very evident from the table below.

ABSOLUTE INDICATED EFFICIENCY OF CROSSLEY OTTO ENGINES OF SIMILAR SIZE SINCE 1882.

	Efficiency	Pressure of compression above atmosphere
(1) 1882–88	0·17	38 lbs. per sq. in.
(2) 1888–94	0·21	66·6 lbs. ,, ,,
(3) 1894	0·25	87·5 lbs. ,, ,,

The experiments giving efficiencies under (1) and (2) were made with engines of 9 in. diameter cylinder and 9½ in. diameter cylinder respectively, both engines having 18 in. stroke, so that the engines may be considered to be of the same dimensions so far as change of economy due to change of dimensions is concerned. The result (3), on the contrary, was obtained with an engine of 7 in. diameter cylinder and 15 in. stroke, so that 0·26 would more properly represent the efficiency to be obtained from an engine of the same dimensions as in the other experiments.

From these numbers it is evident that economy increases with increased compression, but now the question arises: Does the increased compression completely account for the improved performance? If the calculated result from the various compression pressures accounts for the whole change of gas consumption accompanying change of pressure, then it is evident that to the increase of compression is to be credited the improved economy.

To test this the author has calculated by formula 10 on p. 53 the theoretical efficiency of an air engine in which no practical losses occurred, the air engine having the same proportion of compression space as the actual gas engines. Those theoretical efficiencies are shown in the table below placed beside the actual efficiencies obtained in the gas engine; a column is also given showing the ratio between the ideal and actual efficiencies, and other columns showing the dimensions of the engines, the gas consumption per IHP hour, the ratio of compression space to volume swept by piston, and the pressure of compression in pounds per square inch above atmosphere.

THEORETIC INDICATED EFFICIENCY OF CROSSLEY OTTO ENGINES WITH DIFFERENT COMPRESSIONS COMPARED WITH ACTUAL INDICATED EFFICIENCIES WITH THE SAME COMPRESSIONS.

E = calculated efficiency for perfect Otto cycle engines from compression space volume	E = actual indicated efficiency from diagrams and gas consumption	Ratio of actual to ideal efficiency	Cylinder diameter	Cylinder stroke	Ratio of compression space to space swept by piston	Pressure of compression above atmos.	Gas consumption per IHP hour
			ins.	ins.		lbs.	cb. ft.
(1) 0·33	0·17	$\frac{\cdot 17}{\cdot 33} = 0{\cdot}51$	9·0	18	0·6	38	24
(2) 0·40	0·21	$\frac{\cdot 21}{\cdot 40} = 0{\cdot}53$	9·5	18	0·4	61·6	20·5
(3) 0·428	0·25	$\frac{\cdot 25}{\cdot 428} = 0{\cdot}58$	7·0	15	0·34	87·5	14·8

From this table it is evident that the improved economy is fully accounted for by the increased compression; in every case the actual indicated efficiency obtained from the various gas engines is a little more than half of that which would be given by an ideal air engine following the same cycle in a perfect manner without loss of heat to the sides of the cylinder.

It is interesting to observe that the actual efficiency improves somewhat more rapidly with the increase of compression than does the thermodynamic advantage due to compression; that is, when the theoretical efficiency is 0·33 the actual experimental efficiency is ·33 × ·51 = ·17 : with theory 0·40 the actual efficiency is ·40 × ·53 = 0·21, while with 0·428 theory the actual is 0·428 × ·58 = ·25.

The proportion of the theoretical efficiency actually obtained in practice thus rises from 0·51 to 0·58. This means that with higher compressions in addition to the thermodynamic advantage due to change of cycle there is also a further advantage due to a diminution of proportional loss of heat to the cylinder walls.

From this it follows that very probably great further economies are to be obtained by further increase of compression, care being taken of course to preserve a properly shaped compression space, that is a space having small cooling surfaces in proportion to the volume of the compressed charge. Some of the advantage is also due to the more rapid conversion of the heat of the explosion into mechanical work by reason of the small space through which the piston moves while doing a large part of the total work of its stroke.

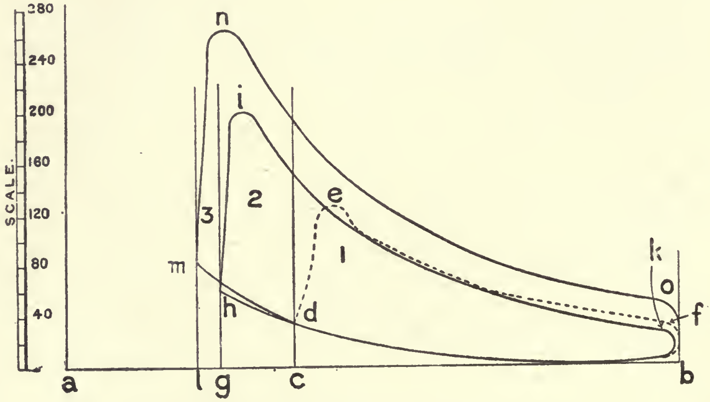

FIG. 177.—Comparative Diagram.
Crossley Otto Engines with different compressions.

To render the effect of compression readily visible to the eye the author has drawn a diagram, fig. 177, in which the length of the line *a b* represents the total capacity of the cylinder including the compression space ; *c b* represent the stroke and *a c* the compression space according to a diagram of a test taken by the author in 1888, and *d e f b* is that diagram plotted down on the scale of $\frac{1}{100}$ inch equal to one pound.

The line *a g* represents the compression space and *g b* the stroke of the Otto engine tested by the Society of Arts, while *h i* *k b* is the diagram taken from the Society of Arts Report of 1888 plotted down to the same scale as the first diagram.

The line *a l* represents the compression space and *l b* the stroke of the engine tested by the author at Messrs. Crossley's works, while *m n o b* is the diagram fig. 135, p. 316, also plotted to $\frac{1}{100}$ in scale.

The three diagrams are also numbered 1, 2, and 3. It is quite evident that No. 2 is larger in area than 1, and that 3 is considerable larger than both. These diagrams show in a clear way the great advance made by increasing compression on the indicator diagram. Mr. Atkinson considers the improved results obtained with the Crossley Atkinson scavenging engine to be due not to any increase in compression, but to the displacement of the burned gases from the cylinder, and he does not consider that increased compression has anything to do with the increased economy. These opinions he advanced in a paper read before the Manchester Association of Engineers.

The author has always advocated and believed in scavenging a cylinder by means of air, and in many of his engines he has entirely discharged the exhaust gases by air forced in by a pump. He has never been able, however, to credit such scavenging with more than 5 per cent. economy as compared with the *same engine* working at the same compression and retaining the exhaust gases.

The results of many tests with gas engines of the three-cycle variety of the Otto type, in which one revolution is devoted to replacing the whole of the exhaust gases by air, proves to demonstration that the gas consumption per IHP is not materially reduced by the act of displacing the exhaust products. Such engines have been constructed by Linford, Griffin, Barker and others before the expiry of the Otto master patent, and although in them the exhaust products were entirely displaced by air they did not show a marked economy.

The matter, however, may be considered as positively determined by the experiments communicated to the author by Mr. A. R. Bellamy, and the diagrams given at figs. 139 and 140 showing with a compression of 60 lbs. per sq. in. above atmosphere a consumption of 19 cb. ft. per IHP hour, and with a compression of 90 lbs. a consumption of 17·6 cb. ft. per IHP. In comparing these figures with the results obtained by the author at Messrs. Crossley's works, it is to be remembered that Openshaw gas is considerably greater in heating value than the gas used by Messrs. Andrew & Co. at Reddish. Mr. Bellamy's diagrams were taken from the same engine with two different compression chambers successively applied.

Scavenging by pure air has, however, great practical advantages. The average available pressure which can be economically obtained in the cylinder is greatly increased, and for really large engines it is absolutely necessary to scavenge in order to avoid premature explosions. This is especially true when high pressures of compression are adopted. With such compressions premature explosions are caused by the presence of the hot burned gases, and when these hot gases are removed by pure air the cold pure mixture may be compressed to very high pressures without danger of early ignition. The admission of air in the first place also prevents any chance of igniting the incoming charge during the charging stroke.

The author therefore considers that Messrs. Crossley & Atkinson's new scavenging device is a most valuable invention, inasmuch as it permits of clearing out all waste products by a device so simple as to add no complications to the engine. It is more valuable, however, for large engines than for small ones, as it is much more desirable to discharge exhaust products in large than in small engines. The invention is especially applicable to engines using Dowson gas, and it considerably increases the available pressure with such engines, by so increasing the air supply present as to enable more gas to be burned economically in the cylinder.

Figs. 178, 179 are diagrams taken from the same 'scavenging' engine with ordinary gas and Dowson gas.

The engine has a 17-inch diameter cylinder and 24-inch stroke.

In fig. 178, the coal gas diagram, the power indicated is 121 horse, with an average available pressure of 113·5 lbs. per sq. in. In fig. 179, the Dowson gas diagram, the very satisfactory available pressure of 97·4 lbs. is obtained.

The engine is rated at 30 HP nominal.

The Dowson diagram is a great improvement on that obtained with the same gas on a non-scavenging engine; the highest available pressure claimed by Mr. Dowson for an engine this size is 82 lbs. per sq. in.

Even with the scavenging device, however, it does not seem safe to rely upon a higher pressure for anything like full load than 65 lbs. per sq. in. with a 16 HP nominal Crossley Otto.

Methods still open to obtain increased Economy.—Modification may still be made in the indicator diagram of the gas engine to further increase efficiency, and the author will now discuss such points as appear to him capable of improvement. In doing this the author will refer to the Otto cycle, but it is to be remembered that the impulse-every-revolution engines may be arranged to produce any of the results brought about by the Otto engine.

The author has pointed out that the actual indicated efficiency of a gas engine increases with the theoretic efficiency, and that the actual efficiency varies from 0·51 to 0·58 of the theory. The actual indicated efficiency also increases with the dimensions of the engine, other things being similar, when the ratio of compression space, and therefore the theoretical efficiency, remains constant. Thus at p. 377 an engine of 9½ ins. cylinder and 18 in. stroke having a theoretic efficiency of 0·40 gave a practical indicator efficiency of 0·21 or 0·53 of the theory.

Referring to a careful test, already mentioned, of a 100 HP double cylinder Otto engine made in Philadelphia by Mr. H. W. Spangler, it will be found that the cylinders were each 14 in. diameter by 25 in. stroke; the engine gave as an average 127 IHP and 92·5 brake HP at 160 revolutions per minute. The clearance space was practically 28 per cent. of the whole cylinder volume, that is 28 per cent. of the volume swept by piston + compression space volume.

The theoretic efficiency of such an engine is 0·41, but the actual efficiency was found to be 0·277, so that

$$\frac{0{\cdot}277}{0{\cdot}41} = 0{\cdot}675$$

The actual efficiency, instead of being only 0·58 of the theoretic, rises to ·675 of it, due to change in the dimensions of the engine without practical change in the compression.

The engine mentioned on page 377 as 7 in. diameter and

15 in. stroke gave an efficiency of 0·25, while the larger engine of 11 in. diameter cylinder and 21 in. stroke, having a similar compression space, gave an efficiency of 0·275.

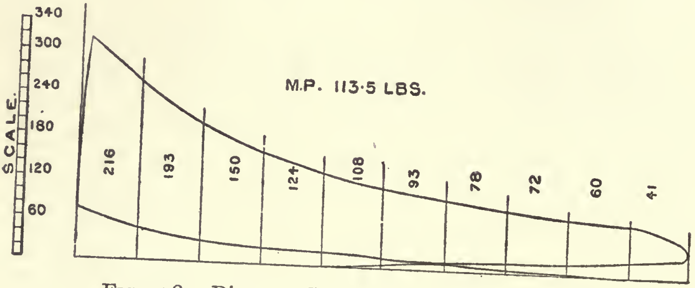

FIG. 178.—Diagram, Crossley Otto Engine (coal gas).

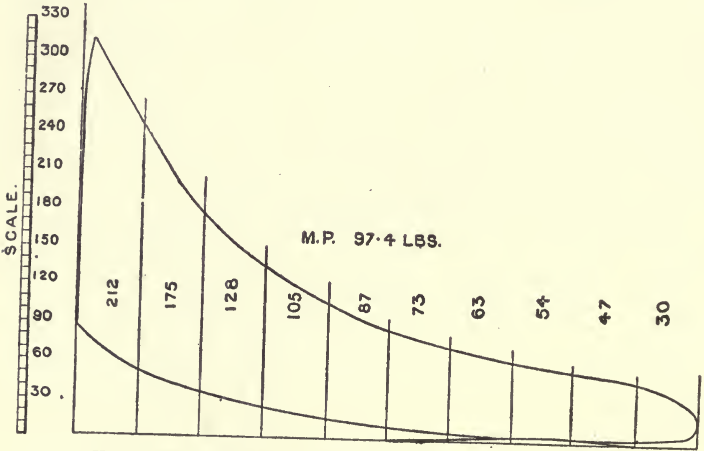

FIG. 179.—Diagram, Crossley Otto Engine (Dowson gas).

The theoretical efficiency in both cases is 0·428, and the ratios are:

$$\frac{\cdot 25}{\cdot 428} = \cdot 58 \text{ and } \frac{\cdot 275}{\cdot 428} = \cdot 643$$

The actual efficiency, therefore, increases with the dimensions of the engine, the compression remaining constant.

COMPARISON OF THE ACTUAL AND THEORETIC EFFICIENCIES OF OTTO ENGINES OF DIFFERENT DIMENSIONS.

Engine cylinder		Relative capacity	Theoretic efficiency	Actual indicated efficiency	Ratio of actual and ideal efficiency
Nearly equal compression	7″ diam. × 15″ stroke .	1	·428	·25	$\frac{\cdot25}{\cdot428} = \cdot58$
	11½″ diam. × 21″ stroke	3·77	·428	·275	$\frac{\cdot275}{\cdot428} = \cdot64$
Nearly equal compression	9½″ diam. × 18″ stroke	1	·40	·21	$\frac{\cdot21}{\cdot41} = \cdot53$
	14″ diam. × 25″ stroke	2·97	·41	·277	$\frac{\cdot277}{\cdot41} = \cdot67$

From these numbers it is evident that efficiency for equal compression increases considerably with the dimensions of the engine.

There is, however, a limit to this increase of efficiency with increased dimensions.

The increase in the efficiency of the larger engines as compared with the smaller using the same proportion of compression space is due to the diminished proportional loss of heat from the gases of the explosion to the inclosing metal walls, and it is always found that in larger engines the expansion curve tends more and more to rise above the adiabatic line. With a maximum temperature of explosion of about 1600° C. it is found by experiment that the actual increase of temperature due to explosion accounts for about from 0·6 to 0·7 of the total heat of the gas present; there is therefore heat enough present in a gas engine of ordinary proportions, if none be lost, to keep up the temperature during expansion performing work to the maximum 1600° during the whole expansion stroke. The increase in dimension if carried to an extreme could therefore only reduce the loss to insignificant relative proportions, and in such a case the mass of incandescent gas might be considered to lose no heat whatever to the walls of the cylinder.

Assume an air engine in such a case; the total volume of the stroke plus clearance space being 1 cb. ft.

Assume the engine to have a compression space of 0·275 of the whole cylinder volume, as in the test made by the author on Crossley's Otto scavenging engine, page 316. Then the diagram and results would be as shown in fig. 180, where the temperature of explosion is 1600° C.

From this it will be seen that while 0·409 is the efficiency for adiabatic expansion, then 0·346 is the efficiency for isothermal expansion; from this, then, it appears that, allowing for the known property of the suppression of heat in a gaseous explosion, the utmost efficiency possible for an engine using coal gas, having a compression space of 0·275 of the total cylinder volume, and expanding to the same volume as existed before compression, is 0·346, so that the efficiency actually attained in practice is $\frac{\cdot 277}{\cdot 348}$=0·80 or 80 per cent. of the possible.

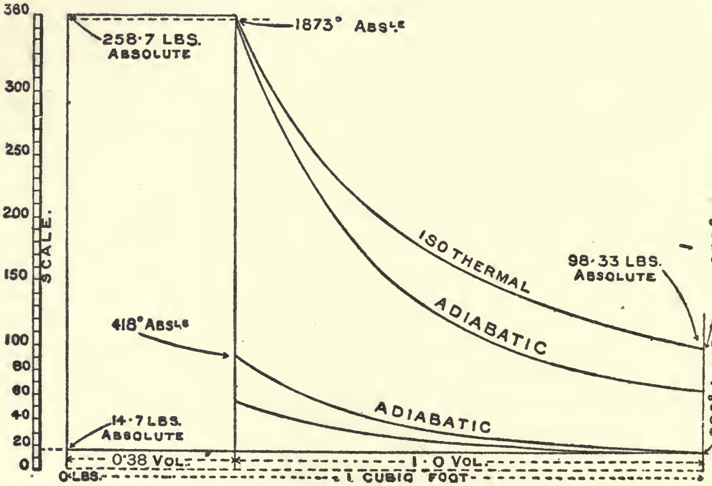

Efficiency of adiabatic compression and expansion=0·409.
Efficiency of adiabatic compression and isothermal expansion=0·346.

FIG. 180.—Theoretical Diagram, comparing adiabatic and isothermal expansion.

So far, then, practice has shown that the absolute efficiency of the gas engine has been increased from 17 per cent. in 1882 to practically 28 per cent. in 1895, that is from converting 17 per cent. of the whole heat into indicated work to 28 per cent. of the whole heat, and this great change in economy has been brought about by increase in compression alone. The compression pressure has risen from 35 lbs. per sq. in. above atmosphere to 90 lbs. per sq. in.

The question now arises, How far can this compression be still enhanced? It will be observed from the formula 10 on page 53 that the efficiency increases somewhat slowly at the higher pressures, and thus a limit must be reached beyond which the increasing weight and dimensions of the engine parts due to rising maximum pressure will more than compensate for the improved theoretical economy.

Assume, for example, that a compression of 210 lbs. per sq. in. above atmosphere is feasible; the volume of the compression space will then be 0·144 of the total cylinder volume, so that the theoretic efficiency of such an engine will be

$$E = 1 - \left(\frac{1}{6\cdot95}\right)^{0\cdot408} = 0\cdot546$$

The ideal efficiencies for different compressions thus stand:

$E=0\cdot33$ for 38 lbs. per sq. in. compression above atmosphere.
$E=0\cdot40$,, 66·6 ,, ,, ,, ,, ,,
$E=0\cdot428$,, 87·5 ,, ,, ,, ,, ,,
$E=0\cdot546$,, 210 ,, ,, ,, ,, ,,

Such a compression as 210 lbs. per sq. in. above atmosphere would produce with an explosion temperature of 1600° C. a maximum pressure of 675 lbs. per sq. in. above atmosphere, and this would involve an engine of nearly double the weight of working parts as compared with the engine tested by the author at Messrs. Crossley's, with but a small increase in power for the great increase in weight.

The author accordingly considers a compression of 200 lbs. per sq. in. as considerably above the limit likely to be useful in a simple gas engine; to render such compressions possible he considers that compound engines will require to be designed.

The gas engine, in the author's opinion, is now rapidly nearing the limit of advantageous increased compression, so that no great further economy is to be expected there.

Looking at diagram 3, fig. 177, however, it will be observed that at the moment of opening the exhaust valve there is still in the cylinder a pressure of about 50 per sq. in. above atmosphere. It is obvious that if the cylinder of that engine had been longer and the piston could expand farther, the pressure could have been reduced while the expanding gases were performing work in it. This source of economy has long been obvious to engineers, and many have attempted to realise it in practice. The author has calculated an ideal case of this kind in which the pressure of compression was 100 lbs. per sq. in. above atmosphere, the explosion temperature 1600°, and the (adiabatic) expansion carried on far enough for the contents of the cylinder to fall to atmospheric pressure. The theoretic efficiency of such an engine would be 0·55, and with an engine of about 200 IHP a practical efficiency of $0{\cdot}55 \times {\cdot}6 = {\cdot}33$ is probable.

In the author's opinion efficiencies of 35 per cent. of the whole heat given to the engine are now within the reach of the engineer.

The question, however, as to whether greater or less expansion should be utilised in an engine is altogether a matter of dimensions; for small engines great expansion beyond the volume of the charge before compression is inadvisable, as the reduction of the volume of mixture dealt with at each stroke may readily so far increase the relative loss of heat to the cylinder as to more than neutralise the gain obtained from the extra expansion.

In very large gas engines it will be undoubtedly advisable to adopt the compound principle, and many engineers have attempted compounding; so far, however, compounding is not successful. Otto, Clerk, Atkinson, Crossley, Burt, Dick, Kerr & Co. and others have attempted compounding, but the principles involved are not yet thoroughly understood and require further investigation.

One important point, however, is clearly established by Burt's engine, figs. 156, 157, and 158, that flame gases do not lose much heat when passed from cylinder to cylinder by short open ports. Experiments made by the author also bear this out. Compounding to be successful must be carried out by means of very short straight and unobstructed ports.

PART III.

OIL ENGINES.

CHAPTER I.

PETROLEUM AND PARAFFIN OILS.

OIL engines resemble gas engines in this, that the power is generated by the explosion of a compressed inflammable gaseous mixture in an engine operating according to the well-known Otto cycle.

In the older gas engine patents it was customary to assume that a gas engine was necessarily an oil engine also, and that only trifling additions or modifications were required in order to convert any gas engine into an oil or inflammable vapour engine.

For many years, however, the difficulty of using safe oil and producing compressed explosive mixtures from it was so great that no effective oil engine was placed upon the market. Even now the oil engine is a much more tricky machine than the gas engine, although it is more reliable than was formerly the case, and it is rapidly settling down by the industry and experiments of many inventors to something like a standard type.

In the earlier oil engines very light inflammable oils of the gasoline kind were used to supply the engine with inflammable vapour, and in these the problem of vaporising the oil was comparatively simple. It was only necessary to draw air over a surface saturated with gasoline or some lighter oil, to produce a mixture of inflammable vapour and air, which when taken into the cylinder of a gas engine readily supplied the place of the ordinary coal gas, and gave explosions under compression closely resembling those obtained with coal gas. The legal restrictions placed upon the carriage and storage of such light oils, however, made it impossible for engines using only such oils to be applied extensively in this country, and accordingly it became necessary to devise engines with vaporisers of a kind capable of supplying inflammable vapours of gases to an engine using oil such as is commonly adopted for petroleum or paraffin lamps. Such oils are much less volatile than the gasoline oils already mentioned, and accordingly it is much more difficult to produce from them inflammable vapours capable of exploding in a gas engine cylinder.

The object of the engineer in dealing with those heavier oils is to so treat them as to charge the engine cylinder with an inflammable mixture of air, and the particular hydrocarbon, which mixture is sufficiently stable in the gaseous or vapour state to stand compression without liquefaction. At the same time the explosion obtained should be powerful and regular, and the combustion so complete as to avoid deposits capable of clogging the valves and working parts.

Many difficulties have been found in so vaporising oils as to produce a suitable inflammable mixture, and at the same time avoid clogging up the vaporiser or the engine.

A knowledge of the properties of the principal hydrocarbons used will assist the engineer in deciding between differing methods of procedure, and accordingly the author will now describe and discuss the properties of the various hydrocarbon oils from the point of view of the oil engine inventor or designer.

Chemistry of Petroleum and Paraffin Oils.—A few words will first be necessary, however, on the chemistry of petroleum and paraffin. The oils used for petroleum engine purposes consist mainly of three varieties—American petroleum, Russian petroleum, and Scotch paraffin oil.

The American and Russian petroleum is obtained by refining crude oil which issues from oil wells found in the United States of America, and in Russia on the shores of the Caspian Sea.

Crude petroleum, as it issues from the wells, is a mixture of many different substances, some gaseous, some liquid, and some solid ; the crude petroleum is, in fact, a liquid containing various gases in solution, and various solid bodies as well. The various liquids, solids and gases, however, resemble each other in one particular. They are every one of them hydrocarbons, that is chemical compounds of which hydrogen and carbon are the sole constituents.

American petroleum consists principally of hydrocarbons belonging to a chemical series known as the paraffin series. This series has the general formula C_nH_{2n+2}. Members of another chemical series, however, are mixed with the paraffin group. This other series is known as the olefine series, and the general formula is C_nH_{2n}.

Both the paraffin and the olefine series comprise substances ranging from the gaseous state to the solid state ; that is, each series contains substances which are solid, substances which are liquid, and substances which are gaseous.

The lightest member of the paraffin series is the well-known marsh gas methane (CH_4), and one of the heaviest of the liquid products is known as pentadecane, $C_{15}H_{32}$, and the solid paraffin so well known in commerce in the form of paraffin candles is a mixture consisting principally of solid members of the paraffin series, together with some solid members of the olefine series. The olefine series likewise comprises a whole range of compounds beginning with the well-known gas ethylene (olefiant gas), and terminating with solid olefines containing more than 20 equivalents of carbon to 40 equivalents of hydrogen.

Crude Pennsylvania petroleum as it issues from the wells gives off as gases:

Methane (Marsh Gas)	CH_4
Ethane	C_2H_6
Propane	C_3H_8

and 12 separate hydrocarbons of the paraffin series have been isolated from the crude liquid. These twelve hydrocarbons are given in the table on page 390 with formulæ, specific gravity, and boiling point of each.

All these hydrocarbons, except the first, are liquid at ordinary temperatures. The boiling points of the hydrocarbons vary from 0° C. to 260° C., and the specific gravity from ·65 to ·792.

It will be observed that in every one of these compounds the hydrogen atoms going to form the molecule are double the number of the carbon atoms, plus an additional two hydrogen atoms. Marsh gas, for example, has in the molecule 1 atom carbon, and 2 atoms hydrogen + 2. Ethane has 2 atoms carbon, and 4 atoms hydrogen + 2, that is 6. The same proportion is given in all the members of the series in the table.

SOME HYDROCARBONS OF THE PARAFFIN SERIES FOUND IN PENNSYLVANIA PETROLEUM. (REDWOOD.)

Name	Formula	Specific Gravity	Boiling Point	
		Normal	Normal	Iso.
Butane	C_4H_{10}	0·645 at 0° C.	0° C.	—
Pentane . . .	C_5H_{12}	0·645 ,, 0° C.	38° C.	30° C.
Hexane	C_6H_{14}	0·63 ,, 17° C.	69° C.	61° C.
Heptane . . .	C_7H_{16}	0·712 ,, 16° C.	98° C.	91° C.
Octane	C_8H_{18}	0·726	124° C.	118° C.
			Boiling Point	
Nonane	C_9H_{20}	0·71 at 15° C.	136° to 138° C.	
Decane	$C_{10}H_{22}$	0·757 ,, 15° C.	160° ,, 162° C.	
Endecane . . .	$C_{11}H_{24}$	0·765 ,, 16° C.	180° ,, 184° C.	
Dodecane . . .	$C_{12}H_{26}$	0·766 ,, 20° C.	196° ,, 200° C.	
Tridecane . . .	$C_{13}H_{28}$	0·792 ,, 20° C.	216° ,, 218° C.	
Tetradecane . . .	$C_{14}H_{30}$		236° ,, 240° C.	
Pentadecane . . .	$C_{13}H_{32}$		255° ,, 260° C.	

Pentadecane, the highest here shown, has 15 atoms carbon associated with 30 + 2 atoms of hydrogen.

The hydrocarbons of this series resemble each other very much in chemical and physical properties. They decompose under the action of heat in a similar manner, and they have similar physical properties. Chemists call such a series of compounds a *homologous* series.

The American refined lamp oils of commerce consist principally of the heavier hydrocarbons given in the list, but they also contain in smaller quantity hydrocarbons of the olefine series.

The table on page 391 gives a few of the best known members of this series.

These compounds form what chemists call an *isomeric* series, because, as will be observed, they are all of the same percentage composition. Each hydrocarbon of the series contains exactly the same proportion of hydrogen and carbon, namely, 85·7 carbon to 14·3 hydrogen. The compounds, however, differ in molecular density, and this is found by the increasing vapour density;

thus, if one volume of ethylene be taken as the unit of weight, an equal volume of butylene weighs 2, hexylene 3, and so on.

SOME MEMBERS OF THE OLEFINE SERIES.

		Boiling Point	Specific Gravity
Ethylene (Olefiant Gas)	C_2H_4	Gaseous	
Propylene	C_3H_6	,,	
Butylene	C_4H_8	4° C.	
Amylene	C_5H_{10}	73° C.	
Hexylene	C_6H_{12}	70° C.	
Heptylene	C_7H_{14}	84° C.	0·714 at 0° C.
Octylene	C_8H_{16}	119° C.	
Diamylene	$C_{10}H_{20}$	165° C.	0·777 at 0° C.
Triamylene	$C_{15}H_{30}$	248° C.	
Tetramylene	$C_{20}H_{40}$	above 390° C.	

The term *isomer* is sometimes limited to compounds of the same molecular density as well as the same percentage composition. Such compounds, however, differ in physical and chemical properties.

At first it is very surprising to find that two chemical substances of identical chemical composition and molecular density, that is, with the exact proportions of the element present, the same in both, should have different properties, but the case is strictly analogous to what is known of the elements. Many chemical elements are known to exist in several forms, without change of chemical composition. Carbon exists, for example, in three forms, the diamond, graphite, and charcoal. These three forms are widely different in appearance and physical properties, but each contains nothing but carbon, and produces nothing but carbonic acid on burning.

Phosphorus also exists in two forms, yellow and red, and it is more than suspected that iron exists in several forms.

When elements vary in this way, the variations from the best known form are called *allotropes* or *allotropic modifications.* When a chemical compound has several varieties, the variations are known as *isomers.* The word *isomer*, however, is more strictly used to denote compounds not only of the same percentage composition, but of the same molecular weight.

Bodies of the same percentage composition and different molecular weights are known as *polymers.* The olefine series then are *polymers.*

The olefines are present in American petroleum to only a small extent, but in Russian petroleum they form the principal constituents. The hydrocarbons present in Russian petroleum are not quite the same as the normal olefines, but appear to be isomeric modifications of the true olefine series, having the general form of $C_nH_{2n-6}H_6$. This formula seems to be a roundabout way of expressing the same thing as C_nH_{2n}, because 6H is deducted, and 6H added. It is not, however, the same form as C_nH_{2n}, but expresses chemical relationship to another set of compounds. The compounds of the general form $C_nH_{2n-6}H_6$ are called naphthenes, and the naphthenes, although of the same percentage composition as the olefines, resemble the paraffins more closely in their chemical decompositions. The naphthenes, which have been isolated from Russian petroleums, are according to Redmond as follows :

NAPHTHENES ISOLATED FROM RUSSIAN PETROLEUM.

C_8H_{16}	119° C.	$C_{12}H_{24}$	196° C.
C_9H_{18}	136° C.	$C_{14}H_{28}$	240° C.
$C_{10}H_{20}$	161° C.	$C_{15}H_{30}$	247° C.
$C_{11}H_{22}$	180° C.		

The specific gravity of the first-mentioned hydrocarbon octonaphthene, C_8H_{16}, at 0° C. is ·7714, and that of dodecanaphthene at 17° C. is ·8027.

Paraffin oil, as its name implies, is mostly composed of members of the paraffin series, and it is produced by the destructive distillation of Scottish shale. The crude oil obtained from the retorts contains, like petroleum, substances both solid, liquid, and gaseous. The solid paraffin of commerce is generally obtained from this paraffin oil.

The chemistry of petroleum and paraffin oils is extremely complex, and only a general idea has been here given of the main constituents.

Before leaving the chemistry, it is desirable to consider the decompositions of these compounds by heat. It is found, for example, that if a heavy member of the paraffin series be exposed to heat under pressure, so as to attain a temperature higher than the boiling point, then that compound decomposes into a lower paraffin and an olefine. The paraffin hydrocarbon $C_{12}H_{26}$, for example, may be decomposed into hexylene C_6H_{12}, and hexane C_6H_{14}. The reaction may be taken as follows :

$$C_{12}H_{26}=C_6H_{12}+C_6H_{14}.$$

The heavier hydrocarbon thus splits up into a paraffin and an ethylene containing a smaller number of carbon and hydrogen equivalents to the molecule. It depends entirely, however, on the particular temperature and treatment as to the actual decomposition which will take place. If the temperature of the hydrocarbon be raised to a high enough point, marsh gas, CH_4, can be produced, and carbon left in the retort. The olefines decompose also, heavier olefines producing lighter olefines by the influence of heat, or lighter olefines together with hydrogen, marsh gas, and solid carbon deposit.

Petroleum Ether and Spirit.—The volatile liquids produced from American petroleum have been classed as petroleum ether and petroleum spirit. The following table gives a list of the substances so produced. The names given are not chemical names, but ordinary trade names, and the compounds are not pure hydrocarbons of one composition, but mixtures of hydrocarbons boiling at very low points.

PETROLEUM ETHER AND SPIRIT.

		Specific Gravity
Petroleum Ether	1. Cymogene	·590
	2. Rhizoline	·625 to ·631
	3. Gasoline	·635 ,, ·666
Petroleum Spirit	4. C Naphtha (Benzine Naphtha)	·678 ,, ·700
	5. B Naphtha	·714 ,, ·718
	6. A Naphtha (Benzine)	·741 ,, ·745

According to Mr. Alfred H. Allen, cymogene consists chiefly of butane, C_4H_{10}, of pentane, C_5H_{12}, and an isomer of that substance ; and hexylene, C_6H_{12}, and an isomer of hexylene.

As these products are extremely volatile, cymogene boiling at 0° C., the freezing point of water, and the heaviest A naphtha boiling away under 70° C., it follows that they are dangerous to handle, and are far too inflammable for general use in oil engines.

The substance cymogene, for example, could only be retained in the liquid state permanently by means of a freezing mixture, and all the others are so volatile that it would be dangerous to approach an open vessel containing them with a light. Any one of these liquids would go on fire instantaneously on plunging a lighted match or taper into the liquid. Liquid so inflammable and so capable of producing large volumes of explosive mixture are much too dangerous for successful use by the general public in engines.

The whole of these liquids are clear limpid fluids, having when pure a rather agreeable odour.

Petroleum and Paraffin burning Oils sold in Britain.—The oils which really concern the engineer designing petroleum engines are not the crude oils or the petroleum spirit or ether, but the burning oils which are sold in Britain in a condition sufficiently safe to be used in ordinary lamps. The Petroleum Act of 1876, and its subsequent modification in 1879, determines, that oils sold for illuminating purposes shall not have a flashing point less than 73° F., the flashing point to be determined by a special apparatus fully described in the Act. The apparatus and the method of manipulating it are the work of Sir Frederic Abel, so that the standard test for these oils for flashing point is known as the Abel test.

Fig. 181 is a section of the Abel close test apparatus, from which it will be seen that a copper vessel C is provided which contains water marked W. This water forms a water bath. An air chamber A is placed within the water bath, and it carries within it an oil cup P made of gun metal. This cup rests upon an ebonite ring, and over the air chamber A, and has a tight-fitting lid on which is fixed a gas burner. The oil cup carries a thermometer t, and above the cover is fixed a slide, which slide on being moved is caused to uncover three holes. The gas jet swivelling on a lever, and moving with the movement of the slide, carries a small flame, and the movement is so combined that, as the lever tilts, the flame is passed through one of the openings in the slide and reaches the top of the oil in the oil cup.

The thermometer t' is intended to take the temperature of the water bath, and the spirit lamp *b* supplies the necessary heat. The pendulum shown alongside of the apparatus is 24 inches long, and is intended to time the operation of testing the flash.

To determine the flashing point of the oil, the temperature of the water bath at the start of the test is arranged at exactly 130° F. The oil to be tested is cooled to 60° F. and poured carefully into the oil cup P, avoiding splashing, until the oil reaches the point of a small bent wire gauge inside the cup. The lid is then put on, and the cup placed in the bath, the rise of the temperature being watched on the thermometer *t* in the petroleum cup. When the oil reaches the temperature of 66° F. the testing is started by setting the pendulum in motion, and while it makes three oscillations, drawing the slide slowly open, and at the fourth oscillation closing it rapidly. By this the test flame is gently tilted through a hole in the slide to the space above the oil. This operation is repeated once for every increase of temperature of 1° F. until the vapour of the oil ignites within the oil cup, giving a pale blue flicker or flash. The temperature of the oil at which this occurs is called the flashing point; that is, the flashing point is that

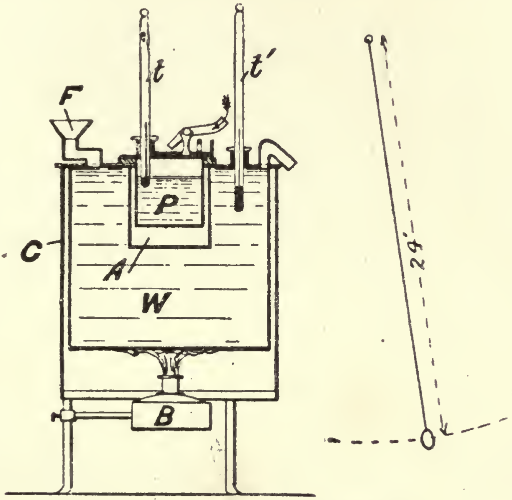

FIG. 181.—Abel Flash Test Apparatus.

temperature at which the oil gives off sufficient vapour to be ignited by a flame. The lowest flashing point allowed by law for petroleum intended for burning lamps in this country is 73° F. or 22·8° C. It is very important, therefore, in experimenting upon various samples of oil, to make certain that the oil is above the legal flashing point.

Other qualities are also necessary, and these can be determined by the specific gravity of the oil, and by the distillation of the oil, and observation as to the range of temperature during which the oil boils over.

The ordinary burning oils sold in Britain are American oils, Royal Daylight, Ordinary, Water White, and Tea Rose.

The Russian oils are Russoline and Russian Lustre.

The paraffin oils are Broxbourne Lighthouse, Young's paraffin oil, and similar oils by many other makers.

Professor Robinson has made an interesting series of experiments upon the principal burning oils sold in Britain, and he has determined the specific gravity flashing point by Abel's test, the point at which each oil begins to boil, and the percentage distilled between certain ranges of temperature. He has also made determinations of the specific heat, and the co-efficients of expansions of several of the oils.

The opposite table gives a summary of his results.

From this table it will be seen that the burning oil with the lowest flashing point is American Ordinary, which has a light straw colour, a specific gravity of ·791, and was sold some time ago at $3\frac{3}{4}$*d.* per gallon. This oil begins to boil at 145° C.; at 215° C. 29 per cent. of the oil distils over to the condenser; and at 233° C. 36 per cent. distils. To vaporise the entire oil, therefore, required a temperature above 233° C.

Looking at the table, Royal Daylight oil begins to boil at 144° C.; and when the thermometer reaches 215° C. 25 per cent. of the liquid is distilled. At 230° C. 35 per cent. is distilled. At 300° C. Professor Robinson states in another part of his paper that 76 per cent. boils over, and at 340° C. 82 per cent. At 358° C., the extreme limit of the thermometer used, there was still a considerable residue. The Royal Daylight oil, therefore, contains a very wide range of hydrocarbons, beginning probably with octane,

PROPERTIES OF PETROLEUM AND SHALE OILS SOLD IN BRITAIN. (ROBINSON.)

Name of oil	Colour	Wholesale price naked, delivered in London and Liverpool	Specific gravity at 15·5 deg. C. (60 deg. F.)	Specific gravity. Corrections per 1 deg. C.	Co-efficient of expansion per 1 deg. C.	Specific heat	Flashing point by Abel close test		Boiling point by therm. (*a*) in liquid	Distillation			
							Fah.	Cent.		Volume distilled under 215 deg. C. (liquid)	Highest temperature (liquid)	Volume distilled	Time
Burning Oils.		per gallon					deg.	deg.	deg. C.	per cent.	deg. C.	per cent.	hrs.
American Royal Daylight	Light straw	4*d.*	·811	·00067	·00084	·47	76	24·5	144	25	230	35	3
,, Ordinary . .	,, ,,	3¾*d.*	·791	—	—	—	75	24	145	29	223	36	3
,, Water White .	Colourless	5*d.*	·780	—	—	—	108	42	150	55	216	55	4
,, Tea Rose . .	Light straw	4½*d.*	·797	—	—	—	83	28·3	150	22	243	37	3
Russian Ordinary (Russoline)	,, ,,	3½*d.*	·824	·00068	·00085	·43	82	27·8	151	30	221	36	3
Russian Lustre . .	,, ,,	4*d.*	·825	·00072	·00089	·45	—	—	—	—	—	—	—
Broxbourne Lighthouse .	,, ,,	5½*d.*	·810	·00072	·00089	·44	152	66·7	165	1st drop	243 270 300	55 90 100	3 2 3
Intermediate Oils.													
American Mineral Sperm .	Straw		·833	—	—	—	—	—	195	0	300	5	3
Storrar's Scotch Gas Oil .	Red'ish br'n	2½*d.*	·843	—	—	—	—	—	195	0	283	5	3
Scotch Intermediate Shale Oil	Clear brown	2½*d.*	·846	—	—	—	—	—	195	0	291	18	2
Light Lubricating Oil .	,, ,,	2½*d.*	·853	·00068	·00080	—	225	107	195	0	285	18	2

C_5H_{18}, and certainly containing towards the end higher hydrocarbons than pentadecane, $C_{15}H_{32}$.

Another American burning oil, Water White, having a specific gravity of ·78, has a flashing point of 108° F., begins to boil at 150° C., and at 215° C. 55 per cent. boils off.

This oil is evidently of simpler composition than the others; that is, it contains hydrocarbons within a smaller range of molecular weight.

Russoline, it will be observed, the Russian ordinary burning oil, begins to boil at 151° C., and by the time the temperature has reached 221°, only 36 per cent. has boiled over. The flashing point, therefore, of this oil is high, 82°.

Broxbourne Lighthouse oil begins to boil at about 215°, and is completely boiled over at 300°.

From these experiments it appears that many of the burning oils of commerce are so constituted that even at so high a temperature as 350° C., part of the oil refuses to come over.

It is quite evident that the type of vaporisers required in a given case must be largely determined by the nature of the oil. Thus an engineer working with Broxbourne Lighthouse oil would find that he succeeded in evaporating the whole of the oil at 300° C. by the agency of heat alone, whereas if he had experimented with American Ordinary oil, he would have found at that temperature a very large residue remaining in his vaporiser.

Methods of Vaporising and Decomposing.—Before discussing the vaporisers in actual use, it is advisable to consider some of the laboratory methods of vaporising, in view of the difficulty of providing vaporisers which will treat varying oils of high flashing point and density.

When a homogeneous substance like water is boiled, the temperature remains constant from the moment of boiling to the complete distillation of the whole liquid.

Likewise if dry air be blown through water, every cubic foot of air will carry off a certain volume of water vapour, until the whole of the water is evaporated, and this will occur by blowing through air at any temperature at which water has an appreciable vapour tension.

The *vapour tension* of water is the pressure of water vapour at any given temperature. The term vapour tension is generally used for pressures under atmospheric pressure.

The following table gives the vapour tension of water for different temperatures from 0° C. to 100° C. The tension is given in millimetres mercury ; that is, the tension of the water vapour at each temperature is given in the height of mercury column which the particular pressure of water vapour at that temperature is capable of supporting.

VAPOUR TENSION OF WATER VAPOUR.

Temp. C.	Tension mm. Mercury	Temp. C.	Tension mm. Mercury
0°	4·6	40°	54·91
5°	5·53	50°	91·98
10°	9·17	60°	148·70
15°	12·70	70°	233·09
20°	17·39	80°	288·51
25°	23·55	90°	525·45
30°	31·55	100°	760·00

From this table it will be observed that at 15° C., about the ordinary temperature of the atmosphere, the tension or pressure of water vapour is equal to 12·7 mm. mercury. The total pressure of the atmosphere is taken as 760 mm. mercury, from which it would appear that the pressure of water vapour at that temperature is about $\frac{1}{60}$ of the pressure of the atmosphere, so that if water were to be evaporated by passing air through it at that temperature, 60 cb. ft. would require to be passed through to take away 1 cb. ft. of water vapour, that is to take away a volume of vapour sufficient to make 1 cb. ft. of steam supposed to be at atmospheric pressure and temperature. If, however, the temperature be raised to about 80° C., 2 cb. ft. of dry air would carry away about 1 cb. ft. of steam calculated at atmospheric pressure.

Water can thus be evaporated either by boiling it off by raising the temperature above the boiling point, or by passing air through it or any other gas at a temperature below the boiling point ; and the amount carried off by a cubic foot of air depends upon the temperature of the water.

The important point to remember is, that to however low a temperature the water be reduced, it can be entirely evaporated by treatment with a sufficient volume of air.

Petroleum or oil in the same way can be evaporated either by boiling off, or by treatment with air or gas ; and the temperature at which the whole liquid can be evaporated is much reduced by passing hot air over the liquid, instead of attempting to boil the liquid away. Thus many of the American oils, which leave a considerable residue at 358° C., could easily be evaporated by passing hot air through the liquid, without requiring any further rise of temperature. It is often objectionable to attempt to vaporise by boiling off or distilling, because in many oils the boiling point is so high that the decomposition point is reached before the liquid will boil. In such a case, attempting to force vaporisation or distillation by increasing the heat only results in the chemical decomposition of the oil, and leaving in the vaporiser a comparatively large quantity of carbon or tar. A sample, for example, of solid paraffin, such as is used for candles, could not be entirely distilled by any attempt at boiling ; but if the sample be placed in a vessel, which vessel is heated to the highest temperature which the paraffin will stand without decomposition on a sand bath—say about 400° C.—and super-heated steam be blown through the liquid paraffin, then nearly the whole of that solid paraffin can be distilled without decomposition. From this it follows that, if vaporisation is desired without decomposition, the temperature can be kept much lower by heating the vaporiser to a predetermined point, and then passing hot air over the liquid contained in it.

It is interesting to note, in connection with the decomposition of paraffin and olefines by heat, that mere heating up in a closed vessel does not produce any large amount of decomposition. If, however, the oil or paraffin be heated up under pressure in such manner that the ordinary boiling point is considerably exceeded, and that oil be distilled and condensed in a condenser—also under pressure—then the oil rapidly decomposes.

Some well-known laboratory methods of experimenting illustrate in a vivid manner the various facts which are useful to the engineer designing oil engines. The distillation of water, for example, in the laboratory apparatus shown in fig. 182, and the subsequent distillation of oils in the same apparatus, enables one to realise the difference between the nature of oils and water.

The apparatus is very simple, and consists of a glass flask A having a tightly fitting cork *a*, through which passes a glass T piece *b*, carrying the thermometer B. The free end of the T piece slips into the glass condenser tube C. This condenser tube passes within a water jacket tube D, fed with a current of cold water by the side tube *c*, which current discharges at *d*. The condenser tube terminates in the glass receiving flask E, supported upon a retort stand; the condenser is held by a clamp, also supported on a retort stand, and the distilling flask rests upon wire gauze supported on a tripod, and is heated by a Bunsen flame.

It is an interesting exercise to rig up this apparatus, and distil fresh water from the flask, observing the thermometer during the process. Fresh water will boil away to the last drop, and collect in the receiving flask while the thermometer remains steady at 100° C. from the beginning of the boiling to the completion of the distillation.

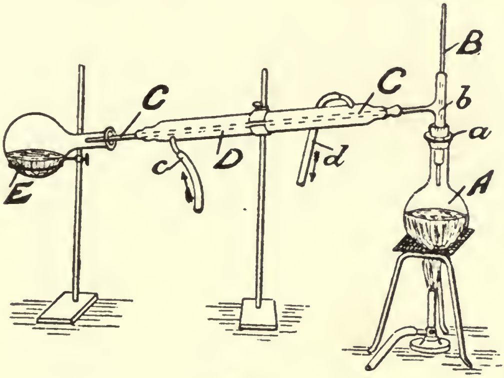

FIG. 182.—Distillation of Water.

If a sample of Royal Daylight oil be placed in the distilling flask (carefully dried from water), it will be found that the oil begins to boil about 144° C., and that a lighter oil first passes over, and that the thermometer slowly rises, so that at 340° C. only 82 per cent. of the whole had distilled over, and even at 358° C. a considerable liquid residue was left in the vessel. If the receiving flask be frequently changed in the course of the distillation, oils of different densities will be collected, the lighter oils boiling off first, and the heavier in order later. Such a process of distillation is called fractional distillation, and on the manufacturing scale it is practised to purify the oils, and separate the light from the heavy. In making this experiment with oil, the apparatus should be modified as shown in fig. 183, where the wire gauze is replaced by a sand bath, in order to protect the glass flask containing oil from the direct action of the flame. In distilling oils experimentally from glass flasks, it is well to limit the size of the flask not to exceed 250 c.c. (quarter litre) ; and a quantity of dry sand should be kept at hand to extinguish the oil flame if the flask breaks and ignites.

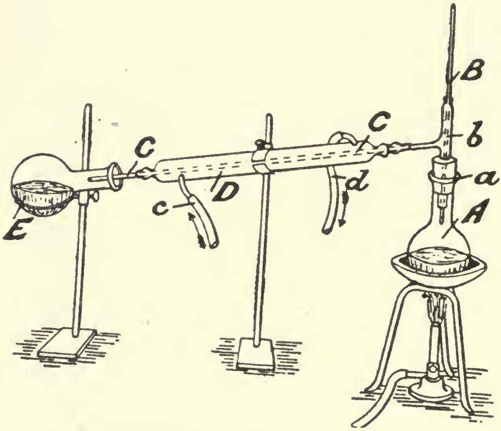

FIG. 183.—Distillation of Oil.

It is found that as the lighter oils distil off and the thermometer rises, the oil in the distilling flask gradually becomes darker in colour, and at the high temperature of 350° C. it becomes quite brown. At first it is of a pale straw colour, and this change to brown proves chemical decomposition to be going on.

If a quantity of the oil which refuses to boil at even the high temperature of 350° C. be placed in one end of a bent glass tube, c, fig. 184, and the tube sealed up by the blowpipe flame, then the liquid distilled from the end *a* into the end *b* without applying any cooling, but after distilling returned again to the end *a* and distilled to *b* again; the process being repeated say for about twelve times; it will then be found on opening the glass tube that the oil subjected to this distillation under pressure has changed its nature very considerably. This can easily be proved by returning it to the flask A, fig. 183, and testing the boiling point. It is then found that the liquid which before refused to boil at 358° C. will now begin to boil below 140° C. and the greater part of it will distil over long before 300° C. is reached.

A sample of the same heavy oil remaining from the first oil experiment if placed in a straight sealed tube as A, fig. 185, may be heated and cooled to the same extent as and for the same time as with the bent tube in fig. 184, and after these series of heatings and coolings it will be found to have hardly changed its composition. These oils if merely heated under pressure without distillation can bear comparatively high temperatures without decomposition, but if distilled at the high temperature decomposition results.

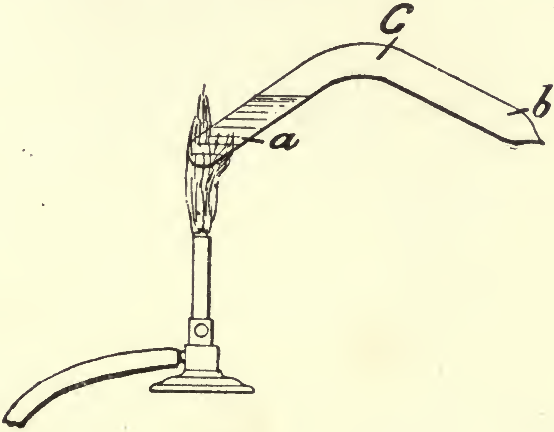

FIG. 184.—Decomposition of heavy Oil.

This appears due to the recombination of the oils when heated to a high temperature and cooled slowly. For effective decomposition it is necessary to distil.

The American petroleum refiners treat the heavy oil left in the still after distilling off the light and the burning oils by a process called *cracking*. The still is formed with a very large and roomy head which causes the oil to condense and run back to the still, and in this way after heating for a considerable time it is found that the oil is *cracked* and oils of lower boiling point produced. The cracking process, however, is attended with the separation of a proportion of solid carbon.

Professors Boverton Redwood and Dewar have devised a method of distilling oils in a compressed gaseous atmosphere which appears to produce more rapid and perfect decomposition from heavier to lighter oils.

If the thermometer be removed from the distilling flask, fig. 183, before the temperature rises so high as to damage it, and the heat be further raised, it is found that after a time a tarry mass is left in the flask which cannot be removed by heating. These experiments very clearly show that the particular oil could not be vaporised by boiling off without leaving a considerable residue. It would, therefore, be hopeless with this oil to design a vaporiser to boil off the oil as vapour, it would only result in the vaporiser being choked with tar and carbon deposit in a few hours.

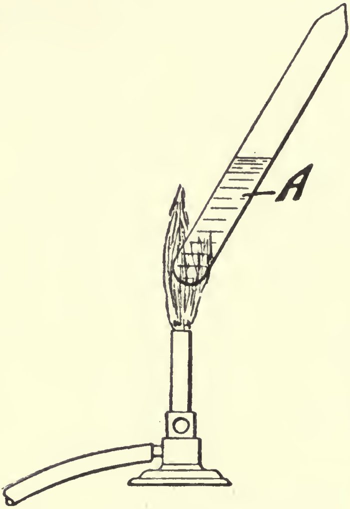

FIG 185.—Heating heavy Oil in a straight tube.

Some method is required which will vaporise the whole of this heterogeneous oil, the heavy part as well as the light. This can be done in another way by means of the apparatus shown in fig. 186, which is the same as that shown in fig. 183 except that the flask A has a wider neck, and the cork carries in addition to the T piece and thermometer the air tube D. If the flask A be charged with Daylight oil and heated up to about 140°, then air be slowly bubbled through the oil (from a gasometer), it will be found that the whole of the oil can be distilled out of the flask A without leaving any heavy residue, and the temperature of the thermometer need not be raised above 200° C. In this case almost the whole of the contents of the flask will pass over without decomposition and without leaving any clogging residue or carrying over any tarry matter.

If a sample of solid paraffin be placed in the flask fig. 186 and heated up to about 350°, then dry steam be blown through by the pipe D, it will be found that even solid paraffin will distil over practically without decomposition.

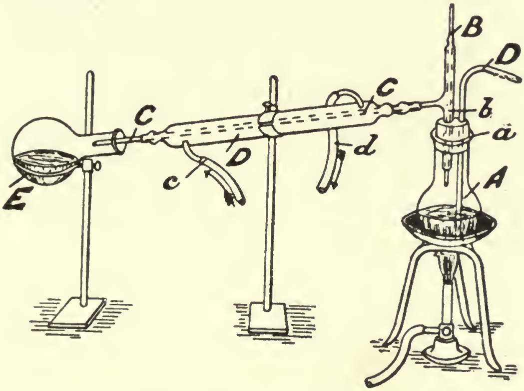

FIG. 186.—Distillation of Oil or Paraffin by Air or Steam.

If the paraffin be heated highly alone and distillation attempted, it rapidly decomposes, leaving a charred carbon mass.

From these experiments it is evident that the best method of vaporising a hydrocarbon oil containing heavy as well as light hydrocarbons is to heat the oil in a vaporiser to a moderate temperature, say about 300° C., and then pass air over it also heated to about the same temperature. By treating it in this way the whole of the oil, light and heavy, can be vaporised without fear of decomposing the oil and so producing tarry products or carbon residues.

It is a mistake to use red-hot surfaces in vaporising an oil when the vapour formed has to pass through valves; it is a mistake, however, which inventors often make.

An oil like 'Broxbourne Lighthouse' boiling entirely below 300° C. might be treated in another way, but the method described of passing hot air through would easily vaporise it also, so that no other method is necessary.

The methods of distilling or boiling under reduced pressure also supply means of vaporising oil at comparatively low temperatures; but the vacuum pan system, although largely applied to the sugar industry, has not been applied to the vaporising of oils.

CHAPTER II.

OIL ENGINES.

HAVING now discussed briefly the chemical and physical properties of the hydrocarbon oils, the reader is in a position to consider the mechanical arrangements of oil engines. The lighter oils being so easily vaporised were naturally first used in the early forms of oil engine. With oils of a specific gravity less than ·74 and a flashing point as a rule lower than the ordinary atmospheric temperature of 16° C., such as benzine, benzine naphtha and gasoline, the problem of producing an inflammable mixture capable of being drawn into an engine cylinder, compressed and exploded, is so simple that no complicated considerations trouble the inventor in producing his engine. The earlier oil engines accordingly used such light oils.

Early Oil Engines.—The earliest proposal to use oil as a means of producing motive power by explosion appears to be that of Street, whose English patent was taken out in the year 1791. The first practical petroleum engine, however, was that of Julius Hock of Vienna, who produced an engine in 1870. This engine operated on the old non-compression system and took in a charge of air and light petroleum spray during part of the forward stroke of a piston, ignited that charge at atmospheric pressure by means of a flame jet and so produced a low-pressure explosion similar to that of the Lenoir gas engine. In 1873 Brayton, an American engineer, produced an oil engine shown on p. 153 of this work. In that engine heavy oil, it is true, was used having a density sometimes as high as ·85, but this oil was crude unrefined oil flashing at about atmospheric temperature. The engine was not a practical success, but it was the first compression engine using oil fuel instead of gas.

Shortly after the Otto gas engine came into use in 1876, several engines of that type were operated by air gas, a gas produced from the liquid known as gasoline, by drawing air through the gasoline and so charging this air with inflammable vapour. The air so charged was drawn into the engine cylinder with a further supply of air and formed an explosive mixture, which was compressed and ignited in the usual manner common to Otto cycle engines.

The Spiel petroleum engine appears to be the first engine of the Otto cycle introduced into practice which dispensed with an independent vaporising apparatus. In this engine light oil of not greater than ·725 specific gravity was injected directly into the cylinder on the suction stroke, and mixing with the air entering the whole of the oil became vaporised at ordinary temperatures or at the slightly increased temperature of the engine cylinder, and on compression an explosive mixture was obtained which acted precisely as the ordinary gas mixture of the Otto engine. Good results are obtained by the Spiel engine so far as economy is concerned, the consumption being ·81 lb. per brake HP per hour. The engine, however, never became really popular because such light oils as it used were dangerous, and besides legal restrictions as to storage and transport of light oils materially interfere with the introduction of such an engine.

Engines using safe burning Oils.—Safe burning oils having a flashing point above 73° F. require very different treatment to obtain an explosive mixture capable of operating an oil engine, and the treatment required varies with the nature of each particular sample of oil. Engines now constructed use American and Russian petroleums and Scotch paraffin oils without difficulty. Such oils vary in specific gravity from ·78 to ·825 and in flashing point from 75° to 152° F. All of the oils in ordinary use have, as has been already pointed out, different temperatures at which they begin to boil at ordinary atmospheric pressure. The temperatures vary from 144° C. to 165° C. (see table, p. 397). Engines burning such oils may be divided into three distinct classes:

1st. Engines in which the oil is subjected to a spraying operation before vaporising.

2nd. Engines in which the oil is injected into the cylinder and vaporised within the cylinder.

3rd. Engines in which the oil is vaporised in a device external to the cylinder, and introduced into the cylinder in the state of vapour.

This division into three classes thus refers to the mode of vaporising. The method of ignition may also be used to divide the engines into different classes :

1st. Oil engines igniting by the electric spark.

2nd. Oil engines ignited by incandescent tube.

3rd. Oil engines igniting by the heat of the internal surfaces of the combustion space.

Spiel's engine was ignited by means of a flame-igniting device similar to that used in Clerk's gas engine described on p. 215 of this work, but Spiel's engine is the only one introduced into this country which ever used a flame igniter. On the Continent, however, flame igniters are not uncommon. Hille's engine uses a flame igniter. In this country, however, all methods of ignition both in gas and oil engines have for practical purposes been displaced by the hot tube and the hot surface igniters.

Engines in which the Oil is subjected to a Spraying Operation before Vaporising.—The engines at present in use in this country falling under this head are the Priestman and the Samuelson. In both the oil is sprayed before being vaporised. The principle of the spray producer used is that so well and widely known in connection with the atomisers or spray producers used by perfumers. Fig. 187 shows such a spray producer in section. In this elementary form of spray producer an air blast passing from the small jet A crosses the top of the tube B, and creates within that tube a partial vacuum. The liquid contained in the glass bottle C flows up the tube B, and issuing at the top of the tube through a small orifice is at once blown into very fine spray by the action of the air jet. If such a scent distributor be filled with petroleum oil such as Royal Daylight or Russoline, the oil will also be blown into fine spray, and it will be found that this spray can be ignited by a flame and will burn, if the jets be properly proportioned, with an intense blue non-luminous flame. The earlier inventors often expressed the idea that an explosive mixture could be prepared without any vaporisation whatever by simply producing an atmosphere containing inflammable liquid in extremely small particles distributed throughout the air in such proportion as to allow of complete combustion. The familiar explosive combustion of lycopodium, and the disastrous explosions caused in the exhausting rooms of flour mills by the presence of finely divided flour in the air, have also suggested to inventors the idea of producing explosions for power purposes from combustible solids. Although, doubtless, explosions could be produced in that way, yet in oil engines the production of spray is only a preliminary to the vaporisation of the oil. If a sample of oil be sprayed in the manner just described and injected in a hot chamber also filled with hot air, then the oil so sprayed will at once pass into a state of vapour within that chamber, although the air should be at a temperature far below the boiling point of the oil. The spray producer, in fact, furnishes a ready means of saturating any volume of air with heavy petroleum oil to the full extent possible from the vapour tension of the oil at that particular temperature. The oil engines about to be described are in reality explosion gas engines of the ordinary Otto type with special arrangements to enable them to vaporise the oil to be used. The author will, therefore, only describe such parts of the engines as are necessary to treat the oil and to ignite it.

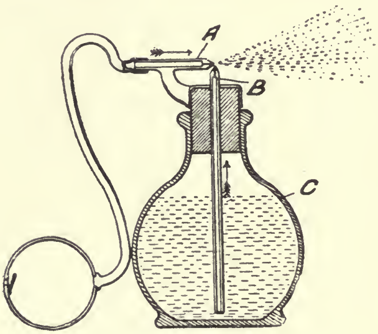

FIG. 187.—Perfume Spray Producer.

Priestman Oil Engine.—Fig. 188 is a vertical section through the cylinder and vaporiser of the Priestman engine. Fig. 189 is a section on a larger scale showing the vaporising jet and the air admission and regulation valve leading to the vaporiser. Fig. 190 is an elevation on a smaller scale showing the general arrangement of the engine.

In this engine oil is forced by means of air pressure from the reservoir A through the pipe B to the spraying nozzle C, and air passes from the air pump D by way of the annular channel *b* into the sprayer *c*, and there meets the oil jet issuing from *a*, the air impinges upon the oil, breaks it up in spray, and the air charged with oil spray flows into the vaporiser E, which vaporiser is heated up in the first place on starting the engine by means of a lamp G. In the vaporiser the oil spray becomes oil vapour saturating the air within the hot walls, and on the out-charging stroke of the piston the mixture passes by way of the inlet valve H into the cylinder. The valve I allows air to flow into the vaporiser to displace its contents, and furnish air to be further saturated with oil spray and vapour for the next stroke. The cylinder K is thus charged with a mixture of air and hydrocarbon vapour, some of which may exist in the form of very fine spray. The piston L then returns and compresses the mixture, and when the compression is quite complete an electric spark is passed between the points M and a compression explosion is obtained precisely similar to that obtained in the gas engine. The piston

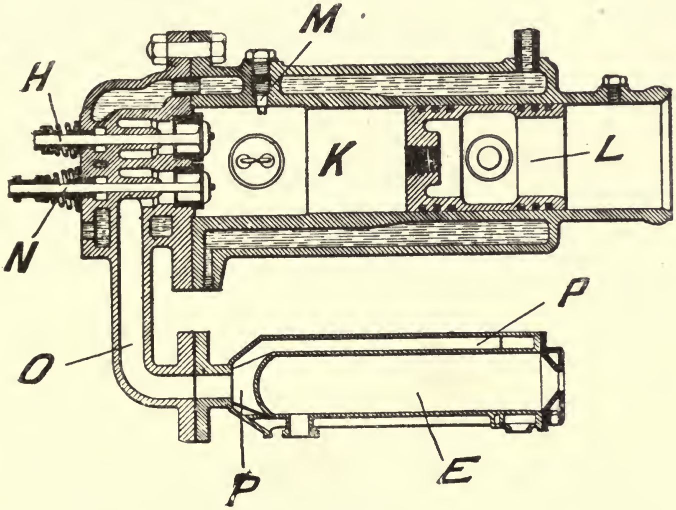

FIG. 188.—Priestman Oil Engine (section through vaporiser and cylinder).

moves out expanding the ignited gases, and on the return stroke the exhaust valve N is opened and the exhaust gases are discharged by way of the pipe O round the jacket P inclosing the vaporising chamber. The vaporising chamber is thus kept hot by the exhaust gases whenever the engine starts, and it remains sufficiently hot without the use of the lamp G. To obtain the electric spark a bichromate battery is used and the Ruhmkorf induction coil. The spark is timed by contact pieces Q operated from the eccentric rod R used to actuate the exhaust valve and the air pump for supplying the oil chamber and the spraying jet. Fig. 189 shows the spraying nozzle on a larger scale. The oil jet passes through the small aperture *a* and meets the air discharging from the annulus *b* by way of the re-entrant nozzle *c*. Very fine spray is produced in this manner.

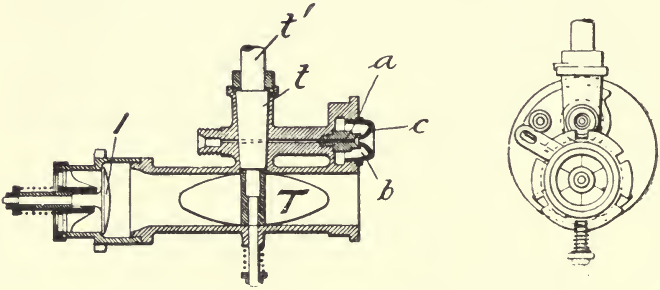

FIG. 189.—Priestman Oil Engine (vaporising jet and air valve).

To start the engine the hand pump S is operated to get up a sufficient pressure to force the oil through the spraying nozzle, and oil spray is formed in the lamp G, and the spray and air mixing produce a blue flame which heats the vaporiser. The hand pump is operated until the vaporiser is sufficiently hot to start the engine. The fly wheel is then rotated by hand, and the engine moves away. The eccentric shaft is operated from the crank shaft by means of toothed wheels which reduce the speed to one-half the revolutions of the crank shaft. The charging inlet valve is automatic.

The Priestman engine was the first engine capable of using

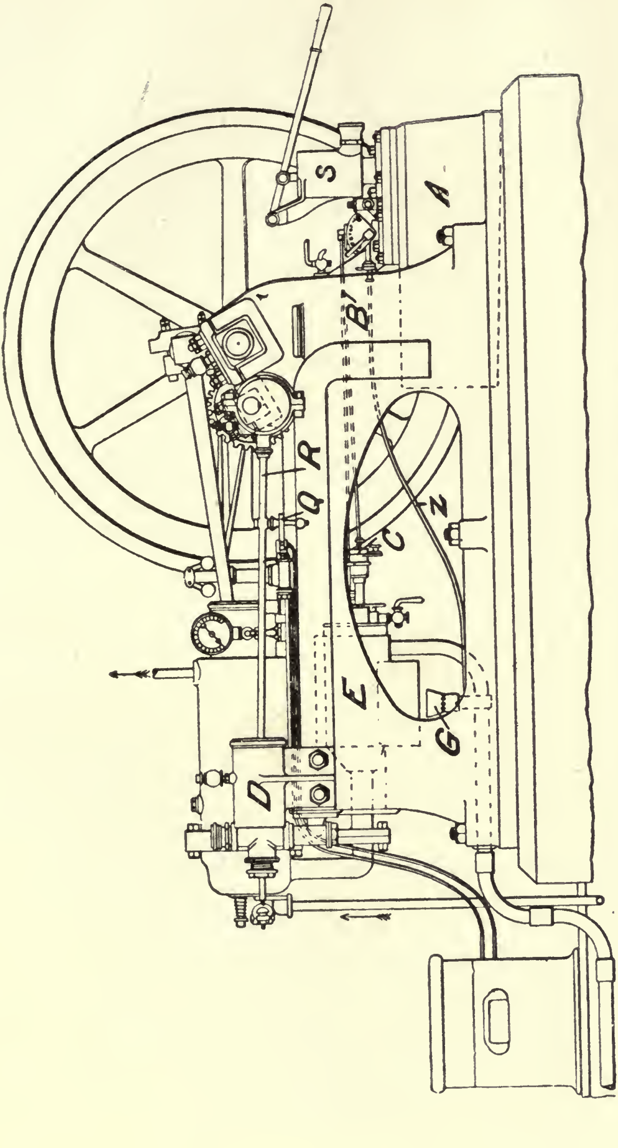

Fig. 190.—Priestman Oil Engine (general arrangement).

heavy safe burning oils. It is somewhat complex in its construction, and suffers under what the author considers the great disadvantage of igniting by the electric spark, but it is the pioneer, and the Messrs. Priestman deserve the greatest credit for their ability and pertinacity in overcoming the formidable difficulties in the way of getting an efficient explosive mixture from heavy oils. Large numbers of the engines are in operation and appear to give satisfaction. The sizes made by Messrs. Priestman vary from 1 horse nominal to 11 horse nominal, and twin or double cylinder engines have been made of 25 horse nominal.

In the Priestman engine governing is effected by throttling the oil and air supply. For this purpose the governor operates on the butterfly valve T and on the plug cock *t* connected to it, by means of the spindle *t'*. The air and oil are thus simultaneously reduced, and the attempt is made to maintain the charge entering the cylinder at a constant proportion by weight of oil and air while reducing the total weight and therefore volume of the charge entering. The Priestman engine therefore gives an explosion on every second revolution under all circumstances whether the engine be running light or loaded. The compression pressure of the mixture before ignition is, however, steadily reduced as the load is reduced, and at very light loads the engine is running practically as a non-compression engine. This is a grave disadvantage, as the fuel consumption per IHP rises rapidly with the reduction of compression.

Tests and Oil Consumption.—Professor Unwin made a test of the Priestman engine at the Royal Agricultural Show at Plymouth in 1890. The engine tested was a 4½ HP nominal, cylinder 8·5 in. diameter, 12 in. stroke, normal speed 180 revolutions per minute. The oil used was that known as Broxbourne Lighthouse, a Scotch paraffin oil produced by the destructive distillation of shale. Its density is ·81 and flashing point about 152° F. The analysis of the oil by Mr. C. J. Wilson gave:

Carbon	86·01 per cent.
Hydrogen	13·90 ,,
Deficiency	·09 ,,
	100·00 per cent.

By calculation the heating value is 19,700 thermal units F.

per lb. This is the total heat evolved including heat of condensation of steam to the liquid state. The principal results given by the test were as follows :

Indicated HP	5·243
Brake HP	4·496
Duration of trial	150 minutes
Mean speed (revolutions per minute)	179·5
Mean available pressure (lbs. per square inch)	33·96
Explosions per minute	89·75
Oil consumed per IHP per hour (lbs.)	1·066
Oil consumed per brake HP per hour (lbs.)	1·243

The heat account is—

Total heat shown by indicator	12·67
Heat given to jacket water	53·39
Exhaust waste and other losses	33·96
	100·02

In 1892 Professor Unwin made another trial of a 5 HP Priestman oil engine at Hull, in the course of which he used both Russoline oil and Daylight oil. The engine was of the same dimensions as the Plymouth engine, that is 8·5 ins. cylinder and 12 ins. stroke. The volume swept by the piston per stroke was ·395 cubic feet, and the clearance space in the cylinder at the end of the stroke was ·210 cubic feet. The small air-compressing pump supplying the spray producer discharged ·033 cubic feet per stroke. The total weight of the engine was 36 cwt., including a fly-wheel of 10 cwt. The principal results obtained were as follows :

	Daylight	Russoline
IHP	9·369	7·408
Brake HP	7·722	6·765
Mean speed (revolutions per minute)	204·33	207·73
Mean available pressure (revolutions per minute)	53·2	41·38
Oil consumed per IHP per hour	·694 lbs.	·864 lbs.
Oil consumed per brake HP per hour	·842 ,,	·946 ,,

With Daylight oil the explosion pressure was 151·4 lbs. per square inch above atmosphere, and with Russoline 134·3 lbs. The terminal pressure at the moment of opening the exhaust valve with Daylight oil was 35·4 lbs., and with Russoline 33·7 per square inch. The compression pressure with Daylight oil was 35 lbs., and with Russoline 27·6 lbs. pressure above atmosphere.

Analyses were made of the samples of Daylight and petroleum by Mr. C. J. Wilson, F.C.S.

	Daylight	Russoline
Carbon	84·62 per cent.	85·88 per cent.
Hydrogen	14·86 ,,	14·07 ,,
Oxygen	·52 ,,	·05 ,,
	100·00 per cent.	100·00 per cent.
Specific gravity at 60° F.	·7936	·8226
Flashing point	77° F.	86° F.

The total heat of combustion of Daylight oil calculates out at 21,490 British thermal units, and for Russoline at 21,180 British thermal units.

Professor Unwin calculates the amount of heat accounted for by the indicator as 18·8 per cent. in the case of Daylight oil, and 15·2 in the case of Russoline oil. Fig. 191 is a diagram taken by Professor Unwin, and published in his paper read before the Institution of Civil Engineers in 1892. The largest diagram is a full-power diagram ; the diagram in dotted lines is half power ; and the small light-line diagram shows the card given by the engine when working without load. The various particulars of clearance spaces, maximum pressure, pressure of compression, and stroke volume are clearly shown upon the illustration. From these figures it will be seen that the Priestman oil engine worked on a consumption of ·946 lb. of Russoline oil per brake HP per hour, and ·842 lb. of Daylight oil per brake HP per hour.

Professor Unwin states that the oil used in starting the engine was insignificant in quantity, being only about one pound of oil in each of the two trials in which it was measured.

The Samuelson Oil Engine.—Messrs. Samuelson's engine is constructed under the Griffin patents, and it resembles Priestman's in subjecting the oil to the preliminary process of spraying before vaporising, and in it also the vaporiser is heated during the running of the engine by the exhaust gases. It differs, however, from the Priestman engine in the methods of igniting and governing. The tube igniter is used, and, instead of reducing the power of the explosions as is done by Messrs. Priestman, the governing device so operates that when speed becomes too high, the air supply is entirely cut off, and the exhaust valve is also closed.

The exhaust valve is closed after the combustion products of the last explosion have been discharged from the cylinder, the piston consequently moves out, expanding the contents of the compression space.

The oil valve is simultaneously shut off in the sprayer, so that no oil is injected.

Fig. 192 is a section of the Griffin patent oil sprayer. The air enters by way of the passage A, and discharges through the nozzle A′, thereby creating a partial vacuum in the annular space B formed between the air nozzle and the oil nozzle. The passage B² connects to the oil-supply chamber B′ by way of a spraying valve C attached to a plunger stem C′. The air pressure, when admitted, forces down the plunger C′, and thus opens the valve C against the pressure of the spring. Oil thus passes up the passage B² from the chamber B′, and is discharged with the air from the nozzle A′ in a state of fine spray.

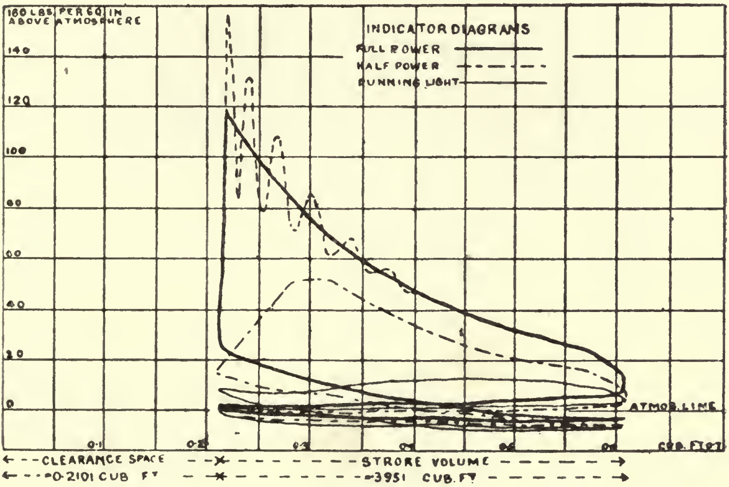

FIG. 191.—Priestman Oil Engine (diagram, Unwin).

Whenever the air pressure is removed from the plunger C′, the spring forces the valve to its seat, and cuts off the oil supply. The air pressure is maintained at from 12 to 15 lbs. above atmosphere by a pump driven from an eccentric on the valve shaft.

The vaporiser is shown in longitudinal transverse section, plan and end elevation at fig. 193. E is the vaporiser, made of corrugated outline, and surrounded by the exhaust jacket F. The air is admitted to the vaporiser from the atmosphere by the adjustable perforated plate G, and the spray nozzle is attached at a point H, and discharges the spray into the centre of the vaporiser.

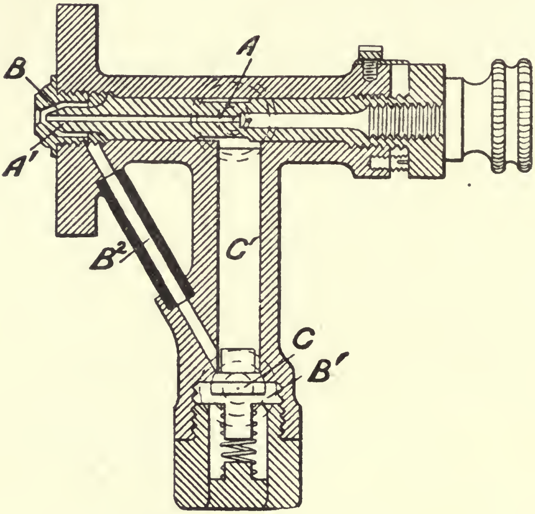

FIG. 192.—Samuelson (Griffin) Oil Sprayer.

So far the arrangements closely resemble those of the Priestman engine; but, instead of using the electric spark for igniting, the incandescent tube is adopted, and an incandescent metal tube is heated and kept hot by an ingenious lamp shown at fig. 194. In this lamp oil is admitted to the chamber J by the pipe K, and it is maintained at a constant level there by means of the overflow pipe L. A short piece of wire M is immersed in the oil, and the oil runs up the wire and covers the bent part by reason of capillary attraction. Air under pressure is admitted by way of the pipe N adjusted by the screw N′, and it passes to the nozzle O, striking upon the bent part of the wire M. The air thus blows the oil off the wire, and at the same time the jet sucks in a further supply of air through holes P, and the mixed air and oil spray pass through the tube Q to the asbestos-lined funnel R; on igniting the mixture within this funnel, it burns with a fierce blue flame, and heats up the igniter tube S; this tube opens into the engine cylinder, and ignites the mixture when it is compressed. To start the engine, the air pump

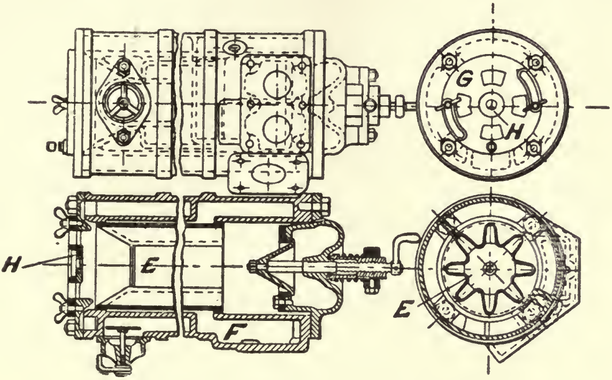

FIG. 193.—Samuelson Engine Vaporiser.

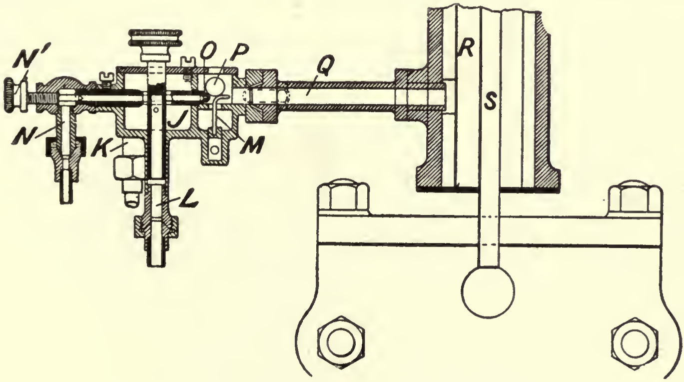

FIG. 194.—Samuelson Engine Spray Lamp.

is worked by hand until the required pressure is obtained; air is then turned on the sprayer, and the spray lighted. By this means the vaporiser is heated for about ten minutes from within, the burned gases being discharged through a special valve opening into the exhaust, which valve is closed when sufficient heat is attained. The heating lamp of the incandescent tube is in the meantime lighted, and the engine is ready to start.

No independent tests have been made of the power and oil consumption of this engine within the author's knowledge.

Engines in which the Oil is injected into the Cylinder and vaporised within the Cylinder.—The engines at present in use in Britain falling under this head are those manufactured and sold by Messrs. Hornsby of Grantham, Messrs. Robey of Lincoln, and a German engine known as the 'Capitaine.' Messrs. Hornsby term their engine the Hornsby-Ackroyd engine, and it is undoubtedly the most successful and simple of this type.

Hornsby-Ackroyd Oil Engine.—Fig. 195 is a section through the vaporiser and cylinder of the Hornsby-Ackroyd engine, and fig. 196 shows the inlet and exhaust valves also in section placed in front of the vaporiser and cylinder section. The main idea of this engine is simple in the extreme. Vaporising is conducted in the interior of the combustion chamber, which chamber is so arranged that the heat of each explosion maintains it at a temperature sufficiently high to enable the oil to be vaporised by mere injection upon the hot surfaces, the heat being also sufficient to cause the ignition of the mixture of vapour and air when compression is completed. The vaporiser A is heated up by a separate lamp, the oil is injected at the oil inlet B, and the engine is rotated by hand. The piston then takes in a charge of air by the air inlet valve into the cylinder, the air passing by the port directly into the cylinder without passing through the vaporiser chamber. While the piston is moving forward taking in the charge of air the oil which has been thrown into the vaporiser is vaporising and diffusing itself through the vaporising chamber, mixing, however, only with the hot products of combustion left by the preceding explosion. During the charging stroke the air enters through the cylinder, and the vapour formed from the oil is almost entirely confined to the combustion chamber. On the return stroke of the piston air is forced through the somewhat narrow neck *a* into the combustion chamber, and it there mixes with the vapour contained in it. At first, however, the mixture is too rich in inflammable vapour to be capable of ignition. As the compression proceeds, however, more and more air is forced into the vaporiser chamber, and just as the compression is completed the mixture attains proper explosive proportions. The sides of the chamber are sufficiently hot to cause explosion, and the piston moves forward under the pressure of the explosion so produced.

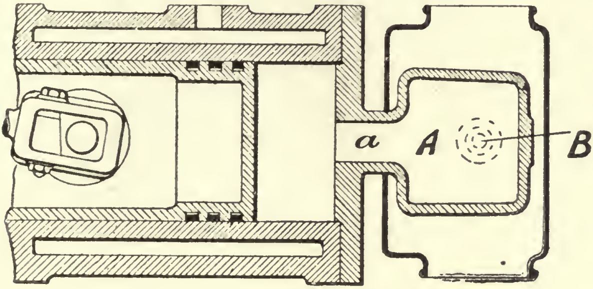

Fig. 195.—Hornsby-Ackroyd Engine (section through vaporiser and cylinder).

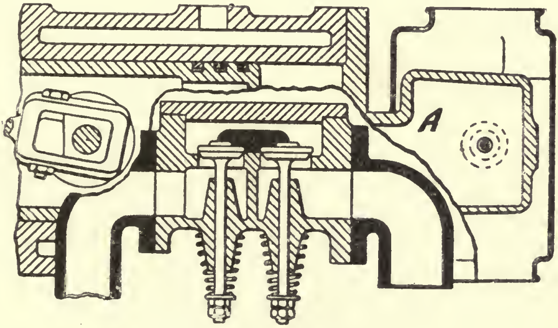

Fig. 196.—Hornsby-Ackroyd Engine (section through valves, vaporiser, and cylinder).

As the vaporiser A is not water-jacketed, and is connected to the metal of the back cover only by the small sectional area of cast iron forming the metal neck *a*, the heat given to the surface by each explosion is sufficient to raise its temperature to about 700–800° C. and keep it there.

It is a peculiar fact that oil vapour mixed with air will explode by contact with a metal surface at a comparatively low temperature, and this accounts for the explosion of the compressed mixture in the combustion chamber A, which is never really raised to a red heat. It has long been known to engineers conversant with gas engines that under certain conditions of internal surfaces a gas engine may be made to run and ignite with very great regularity without incandescent tube or any other form of igniter, if some portion of the interior surfaces of the cylinder or combustion space be so arranged that the temperature can rise moderately; then, although that temperature may be too low to ignite the mixture at atmospheric pressure, yet when compression is complete the mixture will often ignite in a perfectly regular manner. Fig. 197 shows a series of diagrams taken from the ordinary Otto engine igniting in this manner without any special igniter, and it will be observed that the diagrams are very fairly regular. The author has noticed this peculiar fact in connection with one of his old engines described on page 184. He placed a stud A, fig. 198, in the end of the piston B; this stud was sufficiently long to project the head well into the explosive mixture; on starting

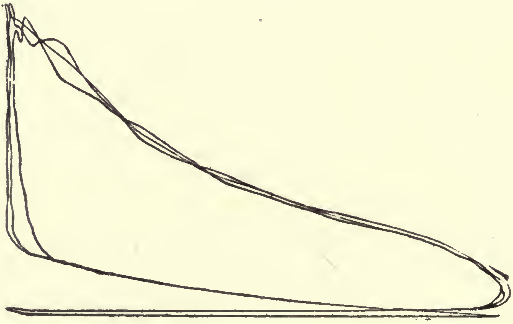

Fig. 197.—Cylinder Ignitions, Otto Engine.

the engine with the ordinary flame-igniting valve and running it for 15 minutes in the usual way, it was found that the flame-igniting arrangement could be entirely stopped from action and the engine run regularly, the mixture igniting only because of the incandescent head of the bolt A, which projected into the explosive mixture after compression and ignited only when the mixture was fully compressed. In this arrangement, however, the bolt A was found to attain a high red heat.

It is a curious and interesting fact that with heavy oils ignition is more easily accomplished at a low temperature than with light oils. The explanation seems to be that in the case of light oils the hydrocarbon vapours formed are tolerably stable from a chemical point of view, but the heavy oils very easily decompose by heat and separate out their carbon, liberating the combined hydrogen, and at the moment of liberation the hydrogen being in what chemists know as the *nascent* state very readily enters into combination with the oxygen beside it. In this manner combustion is more easily started with a heavy oil than with a light one.

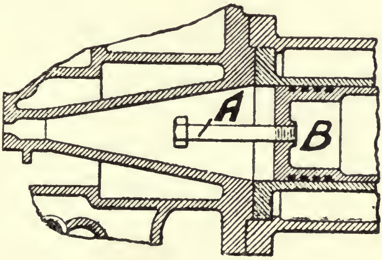

Fig. 198.—Clerk Engine with bolt igniter.

Messrs. Hornsby's vaporiser is of D shape, the rounded part above and the straight part of the D below.

To start the engine the vaporiser is heated by a separate heating lamp, which lamp is supplied with an air blast by means of a hand-operated fan. This operation should take about nine minutes. The engine is then moved round by hand, and starts in the usual manner. The oil tank is placed in the bedplate of the engine. The air and exhaust valves are driven by cams on a valve shaft.

Figure 199 is a general view of the external appearance of the engine, from which it will be seen that the governing is effected by a centrifugal governor. This governor operates a bye pass valve, which opens when the speed is too high and causes the oil pump to return the oil to the oil tank. The fan and starting lamp will be seen in the lower part of the illustration.

Tests and Oil Consumption.—Messrs. Hornsby's engine was exhibited at the Royal Agricultural Show at Cambridge, and after an exhaustive test by the judges of the show in competition with engines by nine other makers, the Hornsby engine was awarded the first prize of 50*l.* The engine tested was given as of 8 brake HP, and its dimensions were—diameter of cylinder 10 in., stroke 15 in., weight of engine 40 cwt. During the trials, according to Professor Capper's report, the engine ran without hitch of any kind from start to finish. Its action was faultless. One attendant only was employed all through the trials, and started the engine easily and with certainty after working the hand blast to the lamp for 8 minutes. During three days' run the longest time taken to start was 9 minutes, and the shortest 7 minutes. When the engine stopped each day the bearings were cool and the piston was moist and well lubricated; the revolutions were very constant, and the power developed did not vary one quarter of a brake HP from day to day. The oil consumed, reckoned on the average of the three days' run, was ·919 lbs. per brake HP per hour. The oil used was Russoline,

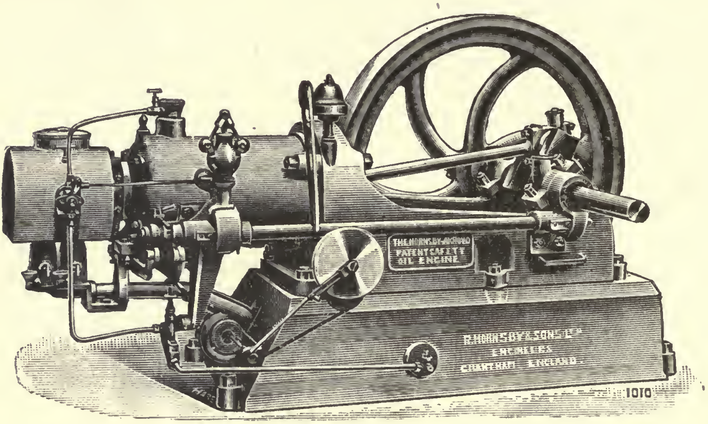

FIG. 199.—Hornsby-Ackroyd Oil Engine.

sold in Cambridge at that time at the price of 3¾*d.* per gallon. At this rate the cost for oil per brake HP was ¾*d.*, and this included all the oil used for the starting lamp.

Mr. C. F. Wilson, F.C.S., has made an analysis of the Russoline oil used for the purpose of testing the oil engines exhibited at Cambridge, and found that the specific gravity at 60° F. ·824, the flashing point (Abel test) 88° F., the total heat of combustion was 11·055 calories, but after deducting for the heat due to the condensation of water vapour this reduced to 10·313 calories. The oil contained 14·05 per cent. hydrogen. Mr. Wilson makes the observation that this oil appears to be very constant in composition, because a similar oil examined by him a year before gave 14·07 per cent. hydrogen, and a corrected calorific value of 10·3 calories, so that the two samples supplied at an interval of a year were practically constant in composition.

The mean power exerted during the three days' trials was 8·35 brake horse. At a subsequent full-power trial of the same engine at the show, a brake HP of 8·57 was obtained, the engine running at a mean speed of 239·66 revolutions per minute and the test lasting for two hours; the indicated power was 10·3 horse, the explosions per minute 119·83, the mean effective pressure 28·9 pounds per square in., the oil used per IHP per hour was ·81 and per brake HP per hour ·977 pounds. According to Professor Capper the heat account of the engine was:

Heat shown on indicator diagram IHP	16·9	per cent.
Heat rejected in jackets	29·5	,,
Heat rejected in exhaust and other losses . .	53·6	,,
	100	,,

In these tests, however, Professor Capper erroneously takes the corrected heat value of the oil instead of the total heat value. In determining the absolute efficiency of any engine, it is necessary to take as a basis the total amount of heat evolved by the combustion from the atmospheric temperature to the atmospheric temperature again. The author has recalculated these figures, and finds the correct heat account below:

Heat shown on indicator diagrams per IHP . .	15·3	per cent.
Heat rejected in jackets	26·8	,,
Heat rejected in exhaust and other losses . .	57·9	,,
	100	,,

In a test of this engine made at the same time but half-power, the brake HP developed was 4·57 at 235·9 revolutions per minute, and the oil used per brake HP per hour was 1·49 pounds. On a four hours' test with this engine running entirely without load at 240 revolutions per minute it was found that it consumed 4·23 pounds of oil per hour. Fig. 200 is a card

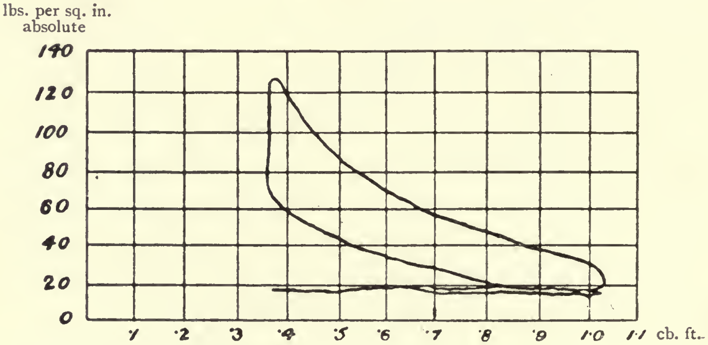

Brake HP, 8·57; indicated HP, 10·3; diam. of cylinder, 10"; stroke, 15"; revs. per min. 239·66; explosions per min. 119·83; mean pressure, 28·9 lbs. per sq. in.; pressure of explosion, 112 lbs. per sq. in. above atmos.; pressure of compression, 50 lbs.; oil per IHP hour, ·81 lbs.; oil per BHP hour, ·977 lbs.

FIG. 200.—Hornsby-Ackroyd Oil Engine (diagram).
Average card, two hours' full power trial. Russoline oil.

from the Hornsby engine, being an average card of the two hours' full-power trial. The cylinder volume is given in cb. ft. and the compression space is also given. From this diagram it will be observed that the average pressure, the maximum pressure and the pressure of compression are very low, and that consequently a large cylinder is required to develop a given power, while it is worth observing how beautifully regular is the ignition obtained by the simple device of firing from the surfaces of the hot combustion chamber.

Robey Oil Engine.—The Robey oil engine is constructed in accordance with the patents of Messrs. Richardson and Norris and it very closely resembles the Hornsby-Ackroyd engine. Like the Hornsby engine, it depends upon the heat of the combustion space walls both for vaporising and igniting, and the governing is effected by diminishing the oil supply. It differs, however, from the Hornsby engine in this, that the combustion chamber is made with a water jacket, and an inner lining is inserted from behind, which lining stands clear of the water-jacketed part and becomes hot by the explosion. Fig. 201 is a section showing one arrangement of the combustion chamber of the Robey engine. The liner A is introduced into the combustion chamber from behind, and it is easily removed when it is desired to clean or repair. The engine also differs, it will be observed, in the position of the inlet and exhaust valves. The charge, instead of passing directly into the cylinder as in the Hornsby engine, passes first outside the combustion space into the cylinder. The author is unaware of any official test of this engine, but fig. 202 is a diagram taken by him from a Robey oil engine of 6 in. cylinder and 9 in. stroke running at 260 revolutions per minute, and using American oil having a specific gravity of ·857 at 50° F. The diagrams from Messrs. Hornsby's and Robey's engines prove that this system of ignition and vaporising supplies a very regular and effective ignition.

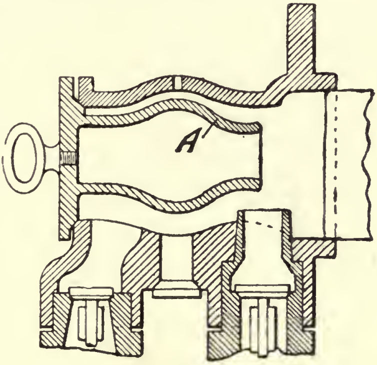

FIG. 201.—Robey Oil Engine (section through combustion space).

Capitaine Oil Engine.—The Capitaine oil engine resembles the Robey engine in surrounding the combustion chamber with a water jacket, and in introducing an internal liner kept clear of the water-jacketed sides to give sufficient heat for the purpose of vaporising and igniting. An engine of this type was entered for trial at the Royal Agricultural Show at Plymouth, and it was declared at

5 brake HP, cylinder $7\frac{1}{4}$ in. diameter, stroke $7\frac{1}{2}$ in., speed 300 revolutions per minute, weight 17 cwts. The engine was designed to use Tea Rose oil, and the adjustments were found to be unsuitable for the use of Russoline oil, which was the oil settled by the judges for use during competition. The engine was therefore withdrawn from the competition, and the author is unaware of any official tests. In his report, however, Professor Capper says that using Tea Rose oil the engine runs at 300 revolutions per minute and develops $4\frac{1}{2}$ brake HP, starting from the moment of heating the vaporiser in about five to ten minutes. Fig. 203 is a section through the vaporiser and combustion chamber. A is the inlet valve operating automatically. It contains a central spindle B, having at the point of it a valve seat *b*. The valve A has thus two seats, one the usual external seat and the other an internal seat, closing on its valve seat *b*. The spindle B operates within a hollow, having a hole C opposing the oil supply pipe D. E is the vaporiser, which is surrounded by a non-conducting casing F, which in turn is inclosed in a metal casing G within the combustion space H. I is the water jacket.

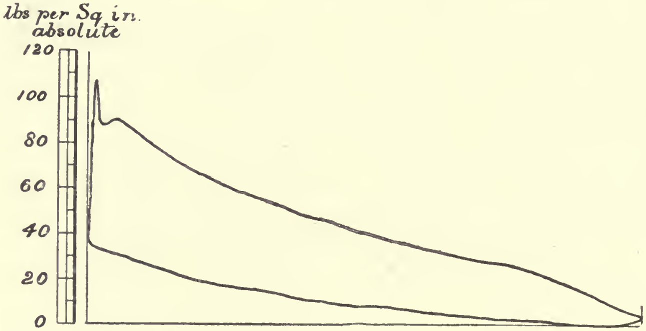

FIG. 202.—Robey Oil Engine (diagram, Clerk).

To start the engine the vaporiser is heated by a hand spirit lamp. This operation takes from five to ten minutes, and according to Professor Capper the engine then starts away very easily. On the suction stroke the air inlet valve opens, thereby opening also the internal valve, and air passes into the cylinder, mostly passing round outside the casing. A portion, however, passes through the centre of the valve, and with it enters the oil from the pipe D. A small quantity of oil and air thus passes through the centre of the vaporiser E, and the vapour enters the cylinder to form mixture for explosion. Upon compression the compressed mixture ignites at the internal hot surfaces of the vaporiser E.

The vaporiser E, with its non-conducting material F and outer casing G, is all immersed in the flame of the explosion ; but the vaporiser E becomes hottest because it is not subject to the cooling action of the air supply, which mostly passes round between the casing F and the combustion chamber. Only a small portion of air passes through the hole C with the oil entering the pipe D ; the surface G also radiates more heat to the cold walls, so that the vaporiser is kept at the highest temperature by the repeated explosions.

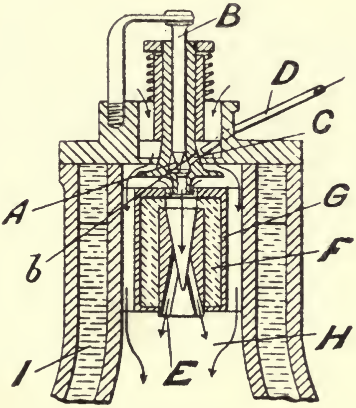

FIG. 203.—Capitaine Oil Engine (section through vaporiser).

The oil pump used in the Capitaine engine is of peculiar construction. Fig. 204 is a section. The plunger A is operated by bell crank lever, roller and cam, actuated in the usual way ; and a slide valve B is actuated also by lever C and cam D ; the plunger is packed by leather packing, and operates in a glycerine bath F. Oil G floats on the top of the glycerine bath, and is discharged through the slide valve B. In this way the plunger A is caused to operate in a space of ample capacity.

Engines in which the Oil is vaporised in a Device external to the Cylinder, and introduced into the Cylinder in the state of Vapour.— Engines falling under this class are manufactured by Messrs. Crossley, Tangyes, Fielding & Platt, Campbell Gas Engine Co., Ltd., the Britannia Co., Clarke, Chapman & Co., Weyman & Hitchcock, and Wells Bros.

Crossley Brothers' Oil Engine.—Fig. 205 shows the general appearance of Messrs. Crossley's oil engine. In this engine a separate vaporiser is arranged, communicating with the cylinder by a vapour valve. The engine is ignited by an incandescent tube, and both incandescent tube and vaporiser are heated by the same lamp. The exhaust and air-inlet valves are placed in opposition to each other, the air-inlet valve being automatic and above the exhaust valve; both open into the cylinder combustion space. The exhaust valve is actuated in the ordinary manner from the valve shaft. The governor is an ordinary rotating governor of the hit-and-miss type, or in the small engines an inertia governor, and when the speed is excessive a link is intercepted which ordinarily opens the vapour valve, and the valve remains closed. No charge is then admitted to the cylinder. The vapour valve upon opening allows the suction of the piston to draw in a charge of oil to the vaporiser, and oil, vapour and air from the vaporiser to the cylinder. The charge admitted to the vaporiser is thus heated during the period of an entire forward stroke. The air-inlet valve is opened by the vacuum caused by the piston, and part of the air, on its way to the cylinder, passes first through a heated coil, and then through the vaporiser. The heated air charge thus carries off the oil vapour through the vapour valve.

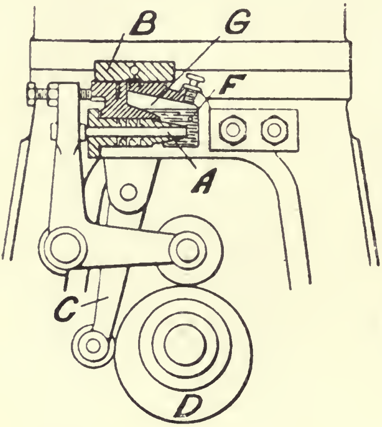

Fig. 204.—Capitaine Oil Engine (section through oil pump).

Messrs. Crossley have used several lamps for the purpose of heating, but the type of lamp now used by them, and indeed by many others, is that best explained by a description of a small lamp sold as the Etna lamp. This lamp is shown in section and plan at fig. 206, and its action and construction are as follows :

The lamp comprises a stout brass oil- and air-containing vessel A, having fitted in it a small air pump B. This pump projects within the vessel A, and has at its lower end a pump valve opening inwards, which allows the air to pass from the pump into the vessel, but prevents it leaking back into the pump. The pump leathers cup downwards, to close tight when the air is compressed ; but when the piston is withdrawn the air passes the leathers on the up-stroke, so that no second valve is required. The piston leathers act as a valve in the manner so well known in connection with pneumatic tyre inflating pumps. The vessel A has also an oil filter C, an air-relief pin D, and above it carries the lamp proper, consisting of a continuous arrangement of tubes and passages, E, F, G, H, which communicate with the oil in the vessel A by the pipe E, which dips to nearly the bottom of the vessel. The tube E leads from the oil vessel to the square coil F, seen more clearly in dotted lines on the plan. The tube G leads from F into a passage shown in the casting H. The casting is drilled out to carry a

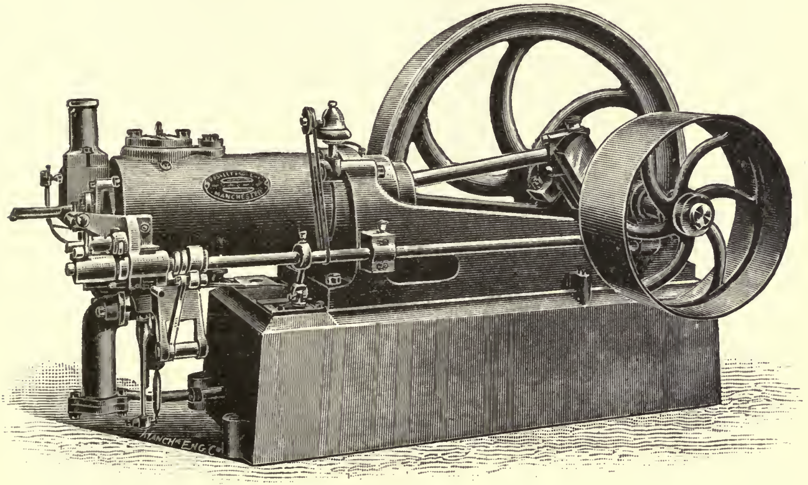

FIG. 205.—Crossley Oil Engine.

fine nozzle piece I, fitted on as shown. A hood or sleeve J is slipped over the whole tube arrangement. The sleeve has two large air inlet holes K, one of which is clearly seen in the section. Smaller holes are made in the sleeve opposite the square tube piece F.

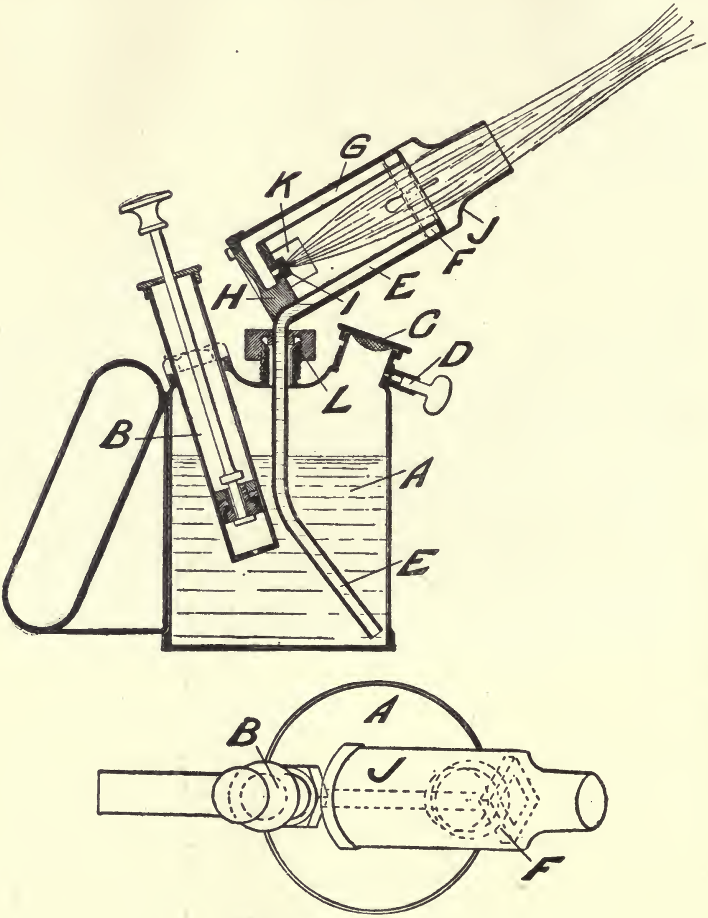

FIG. 206.—Etna Lamp.

To start the lamp, the vessel A is partly filled with petroleum by way of the oil cup C, the cap is screwed on, and the saucer-shaped depression in the top of the vessel A is filled with spirit and ignited. The flame produced heats up the tube arrangement and the funnel or hood. About one minute suffices to heat it to a high enough temperature for starting. The air pump B is now operated, and air is forced into the vessel A under pressure, and it presses upon the surface of the oil and forces it up the tube E. It rises in the tube till it reaches the hot part, when the oil is caused to boil and vapour is generated ; this vapour issues at the small jet I, and as this jet is small the pressure rises. The vapour jet ignites at the external flame, and a powerful flame shoots into the hood J, and by its motion sucks in a charge of air by way of the slots. The flame leaving the hood J is thus mixed with air, and a powerful blue smokeless flame leaves the hood, which flame is capable of heating up metal surfaces to incandescence without depositing soot. The flame plays on the tubes E, F, G, and so supplies heat to the oil. A small pressure of air is required, and if excess has been pumped in, it is discharged by the plug D.

If too great an air pressure be given, the air will force the oil up to the jet I, but with the correct pressure the air just keeps the oil high enough in the tube E to generate sufficient vapour. Pegs are arranged to allow the tubes to be cleaned. A few strokes of the air pump, supply air sufficient to operate the lamp for hours.

Fig. 207 shows a vertical section and a sectional plan of the Crossley vaporiser and incandescent tube. The sectional plan is taken on the line X Y of the vertical section, through the vapour admission and igniting port of the engine, and the sectioned metal is part of the back cover or end of the combustion chamber. The combustion chamber is thoroughly water-jacketed like the rest of the engine. When the suction stroke of the engine begins, the vapour valve G is opened by the bell crank lever, operated from the valve shaft by a link. This link is controlled by the governor so as to either hit or miss the cam by a knife-edge contrivance. While the engine is at work, therefore, the valve G is either entirely opened or entirely closed on the charging stroke, and the governing is the same as the usual gas engine governing. When the valve G is opened considerable suction to the engine cylinder is caused, as the air inlet valve to the cylinder is automatic, and is held to its seat by a spring. The vaporiser passages communicate with the vapour valve G, and a small quantity of heated air passes over the oil and carries off the vapour. The vaporiser is heated by the lamp, and the products of combustion are discharged by the funnel D. Fig. 207 shows this very clearly. The lamp produces a powerful Bunsen flame, which first heats up the igniter C to incandescence, then it plays on the vaporiser having drilled holes B B B B, and the gases pass up the funnel. A casing surrounds the heated parts.

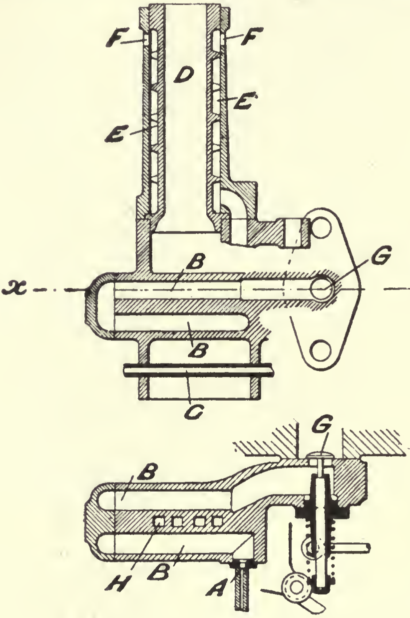

FIG. 207.—Crossley Vaporiser.

The funnel has an air space E surrounding it, which is divided up by louvre projections. Small holes F open to the air at the top. When the vapour valve G is opened, air is drawn in by the holes F, passes down the air space E, guided from side to side by the baffle or louvre projections ; the air current reaches the passage B and passes into the vaporiser, above the oil pipe or channel A. The air there meets the liquid oil, also sucked in by the partial vacuum, and the hot air carries the oil through the vaporiser along the passage B, down along a similar passage under it, and along B to the vapour valve G. The oil is thus thoroughly vaporised and carried away by the hot air current. One important point to insure effective vaporisation is to heat the air thoroughly, and reduce its quantity as much as possible. This is done by limiting the dimensions of the openings F. The air and oil vapour pass by the valve G and admission port to the engine cylinder, and there mix with the air entering by the automatic air inlet valve at the top of the cylinder ; the mixture is then compressed and ignited when compression is completed by a timing valve of the ordinary Crossley type connected to the igniting tube C. The igniting tube C communicates with the admission passage by a small hole on the under side passing through the casting of the vaporiser. The tube C is surrounded by a cast-iron protecting tube to prevent too rapid oxidation.

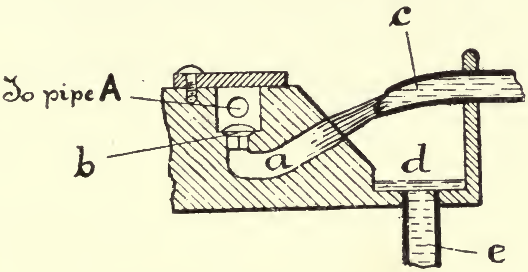

FIG. 208.—Crossley Oil Measurer.

The incandescent tube C has at its outer end an inlet suction valve, which opens inward at each suction stroke, and thoroughly clears out the burned gases of the last explosion, and so insures certain explosion when the compressed mixture is admitted.

The oil supplying and measuring arrangements are very perfect.

The pump does not measure the oil, but only supplies it in excess to a very simple measuring device. Fig. 208 is a diagrammatic section of that device. The hole *a* is the oil-measuring aperture, and it opens to the small lift valve *b*, which communicates with the pipe A, fig. 207 ; oil is spirted from the end of the pipe *c* by the pump, and it fills the hole *a* up to the top ; the excess oil drains away to the chamber *d* and returns by the pipe *e* to the reservoir in the tank in the base of the engine. When the opening of the vapour valve causes suction in the vaporiser, the valve *b* lifts, and the oil charge contained in the hole *a* is sucked in, air following it to clear it all out into the vaporiser. By this device a constant volume of oil is measured into the vaporiser for each working stroke of the engine, and this measurement is accurate and unvarying, even when the speed of the engine changes.

The oil pump is large enough to discharge a considerable excess of oil, and one pump plunger serves both for vaporiser and lamp. The pump discharges through two lift valves, one of which is loaded by a spring to lift at about 20 lbs. per sq. in., and the other is not loaded but lifts freely. The loaded valve discharges to the vaporiser oil measurer, and the free valve discharges to the lamp.

The lamp operates on the principle of the Etna lamp, but instead of a coil, a gun-metal chamber is used, having a central aperture for flame, a jet of small diameter at the foot of the central aperture, and a pipe leading to the connected space from the oil pump. The jet is very fine, and as the oil finds its way into the chamber, vapour is formed which issues from the jet and forms with air a Bunsen flame which heats up the lamp chamber, and heats to incandescence the igniting tube as well as the vaporiser and air heater. The lamp is started in the usual manner by heating with flame from some oil-soaked rag or waste ; this is done to avoid the use of any light oils for starting.

It is found by experience that the vapour jet hole should be small enough to generate a pressure of not less than 20 lbs. per sq. in., and by the simple device of two discharge valves, one loaded and one free, the vaporiser is fed with oil at 20 lbs. pressure. The vapour generated is thus kept at 20 lbs. as the vapour jet produces sufficient resistance. If the pump sends too much oil, then the liquid level in the vaporiser rises, and the increase in vapour pressure holds the lift valve down and allows more oil to discharge by the loaded valve. The lamp thus just gets oil enough to generate vapour at 20 lbs. By keeping the lamp chamber under considerable pressure it is found that the small jet hole does not choke up; if the pressure be lowered, however, the hole rapidly chokes up with carbon. This is obviously due to the fact that by boiling under high pressure the oil decomposes into lighter oils which do not readily carbonise, as explained in the previous chapter. In stopping the lamp it should be stopped suddenly by dropping the pressure rapidly; by doing this the hole escapes being choked up. Every morning before starting the vapour hole should be pricked out with a very fine needle.

The vaporiser should be cleaned out every week; this is accomplished by taking off the scraped cover, which is held on by a bolt, and putting in a steel rimer in succession to the four bored-out holes of the vaporiser. By turning round the rimer the carbon or coke which has formed in a week's run is easily cleared out.

Tests and Oil Consumption.—A Crossley engine, declared of 7½ brake HP, was tested at the Cambridge Royal Agricultural Show. Its dimensions were: Cylinder 7 ins. diameter; stroke 15 ins.; weight 32½ cwts.; the speed per minute 210 revolutions. During the test the engine ran admirably, and required very little attention; the average time taken to start was 16 minutes, the maximum time taken being 19 minutes, and the minimum 13. One attendant only was required. As the result of the three days' test, the engine developed on an average 6·28 brake HP, and consumed ·90 lb. of Russoline oil per brake HP per hour. At a full-power trial, lasting for two hours, the engine developed 7·01 brake HP, and indicated 7·9, running at a mean speed of 200·9 revolutions per minute. The oil used was ·73 lb. per IHP per hour, and ·82 lb. per brake HP per hour. On a half-power trial the engine developed 3·72 brake HP on a consumption of 1·33 lb. of Russoline per brake HP per hour, the speed being 198·4 revolutions per minute. Running entirely without load at 190 revolutions per minute, the engine consumed 2·53 lbs. of oil per hour. Fig. 209 is an indicator diagram taken from this engine, from which it will be seen that the maximum pressure of explosion was nearly 240 lbs. absolute, and the pressure of compression about 80 lbs. absolute. The mean available pressure during the two hours' run was 72·2 lbs. per square inch, the mean number of cylinder explosions per minute being 75·3. The oil consumed by the Crossley engine is remarkably low, ·82 lb. of Russoline oil per brake HP per hour representing an expenditure for fuel of ·37*d.* Another trial of the Crossley engine was made at the Show with Broxbourne oil. The power indicated was 8·4, the brake power 7·63, the engine running at a mean speed of 199·84 revolutions per minute. The mean effective pressure was 63·6 lbs. per square inch, and the oil per IHP per hour, ·72 lb.; and per brake HP per hour, ·785 lb. Although the

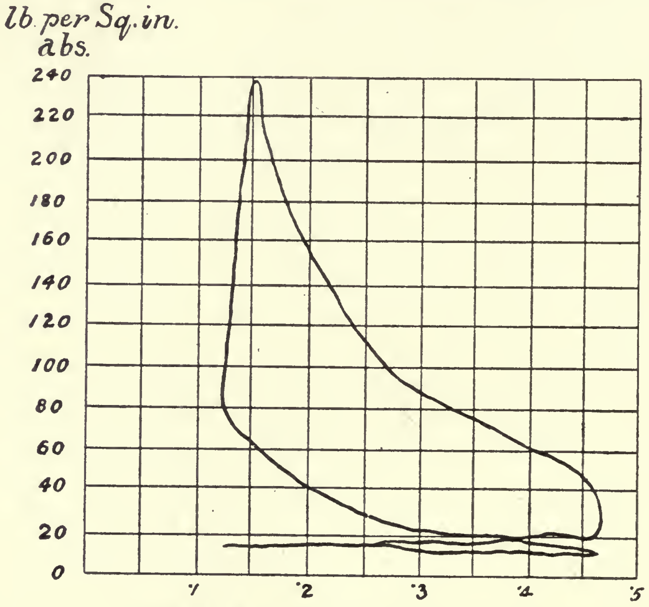

FIG. 209.—Crossley Oil Engine (diagram).
Average card, two hours' full power trial. Russoline oil.

engine runs with less of this oil per HP, yet it is to be remembered that the oil costs $8\frac{1}{2}d.$ per gallon, and is not so economical from a monetary point of view as Russoline oil.

Tangye Oil Engine.—This engine is made under Pinkney's patents, and it resembles Crossley's oil engine in this, that the oil is vaporised in a separate vaporiser, but the air charge is wholly passed through the vaporiser to carry the vapour into the cylinder, and the air so used is not subjected to any preliminary heating. The ignition is effected by incandescent tube. The construction and operation are as follows :

Fig. 210 shows a vertical section and plan of the oil attachment to a Tangye gas engine. The vaporiser is a bottle-shaped vessel A always in direct communication with the combustion space of the engine by the passage B. C is the inlet valve to the engine ; it is automatic, and is held to its seat by a spring. D is the air inlet passage. E is the oil supply aperture which terminates in a small hole F opening on the seat of the valve C and consequently opened and closed by it. G is a coil lamp of the Etna type. I is the igniting tube opening to the vaporiser. H is a bracket for supporting the lamp G in its successive positions under the vaporiser and under the igniting tube. J is a casing surrounding the igniting tube, and K a casing surrounding the vaporiser. The lever L (plan) operates a slide, which causes the hot gases from the lamp, to pass either round the vaporiser or by the tube funnel J. To start the engine the lamp G is first lit in the manner of the Etna lamp and the vaporiser A is sufficiently heated. The lamp is then shifted out on the bracket H, and the tube I is raised to incandescence. The engine is then ready to start by turning the fly-wheel. When in operation, on the suction stroke air enters by the valve C, and at the same time oil discharges by the aperture F, mixes with the entering air, and falls on the vaporiser when it is vaporised, and passes into the cylinder with the air. On the compression stroke the inflammable mixture is compressed and ignites at the igniting tube I, producing a working explosion. When the valve C closes, the oil supply is also closed.

When governing, the governor holds open the exhaust valve so that the exhaust gases are alternately drawn into and discharged from the cylinder ; during this action the valve C is held shut by its spring, and no oil or air enters the cylinder. When the exhaust

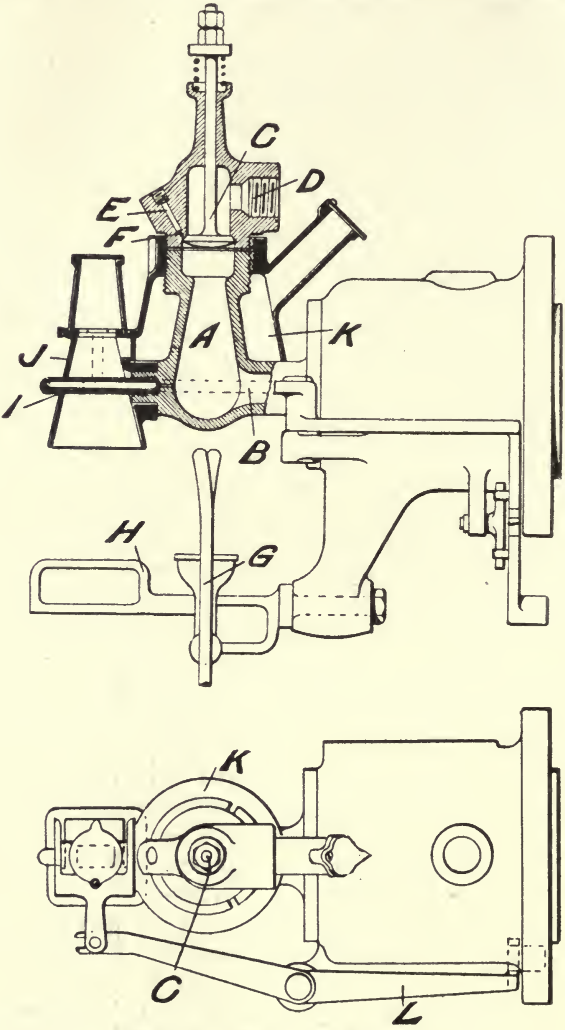

FIG. 210.—Tangye Oil Engine.

valve closes again, the oil and air enter the vaporiser and the explosions begin again.

The oil is fed by gravity from an oil reservoir mounted above the engine by a pipe to the passage E; adjusting devices are applied at the reservoir end.

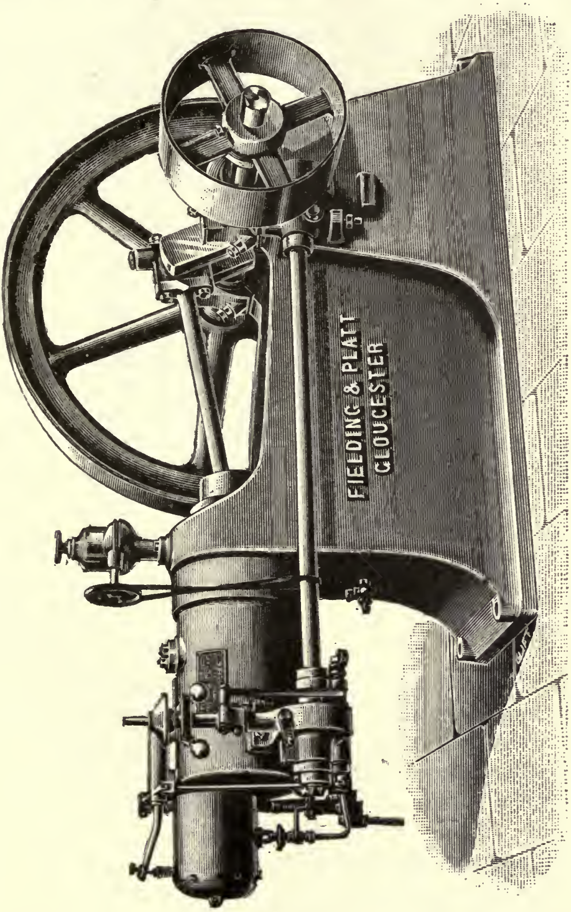

Fig. 211.—Fielding & Platt's Oil Engine.

The engine is a very simple one, but in the author's opinion all systems of feeding oil by gravity are bad, and with large engines such systems are likely to be dangerous.

The author is unaware of any independent tests of this engine,

Fielding & Platt's Oil Engine.—Fig. 211 is a general view of Messrs. Fielding & Platt's oil engine. Fig. 212 is a section through the vaporiser, and the admission port to the engine cylinder. In this engine the vaporiser and igniter tube are combined. A is the vaporiser, B the combined vaporiser and igniter tube, C is an air heating tube, and D is a valve communicating between the vaporiser and the igniter tube. The whole system, A, B, and C, is inclosed within a casing E and heated up by means of a lamp F. This lamp is of substantially the same construction as the Etna, described at page 431 of this work. That lamp has an air reservoir G and an air pump H, and the lamp part F is arranged to produce a vapour jet which sucks in by induction sufficient air to form a strong blue Bunsen flame. In this engine the exhaust and air inlet valves are situated opposite each other, opening into the same port. In oil engines this is a highly desirable arrangement, because it is advisable to heat the main air supply to some extent as it enters the engine, and this is better done by causing the air to impinge upon the hot exhaust valve and pass through the hot exhaust port before reaching the engine

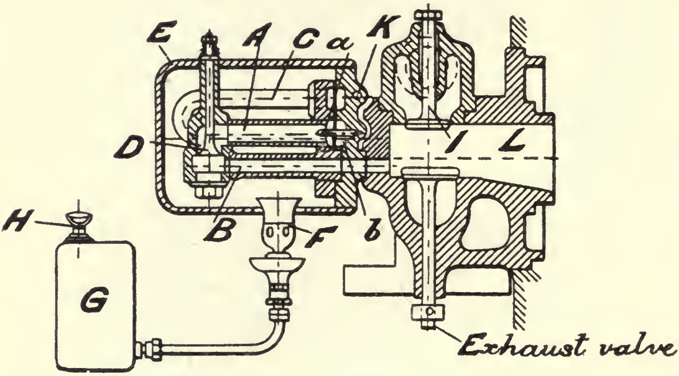

FIG. 212.—Fielding & Platt's Oil Engine (section through vaporiser).

cylinder. To start the engine the lamp is ignited and the igniter tube, vaporiser tube, and air tube are heated up. Oil is then injected by means of a small suction pump and discharged by the jet *a* into the vaporiser A; on the suction stroke of the engine the air valve I opens, and air is drawn into the engine cylinder. At the same time air passes by means of a small air inlet aperture K through the air heating tube C to the chamber *b*, and thence to the vaporiser tube A. The valve D is opened by a cam during the suction stroke, and the air and vapour pass together through the igniter tube B into the cylinder. The charge of oil is thus sucked through at each stroke and taken into the engine cylinder by a small quantity of air, there to mix with a larger quantity of air already in the cylinder. The port L is somewhat large, and it becomes hot by the exhaust gases and by the explosion, and so maintains the vapour without condensation as it enters the cylinder.

An engine was exhibited by Messrs. Fielding & Platt at the Cambridge Show. Its dimensions were—diameter of cylinder 8¼ ins., stroke 16 ins., weight of engine 53 cwts., declared speed 170 revolutions per minute. In this engine all the valves, air valve, vapour valve, and exhaust valve are actuated from one cam, and the governor of the usual hit-and-miss type cuts out explosions when the engine exceeds its speed by holding open the exhaust valve and keeping the air and vapour valves closed. The piston thus runs to and fro, taking the exhaust gases into the cylinder from the exhaust pipe, and returning them to it again. During the trial at the show the lamp is stated to have given too little heat, and consequently rendered the ignitions late. The engine ran very steadily, however, and started very readily with one attendant only, twenty-two minutes being consumed in heating up. As the late ignition could not be remedied at once the engine was withdrawn from the test.

Tests and Oil Consumption.—Messrs. Fielding & Platt have been good enough to send the author particulars of the results obtained with the engine (see table, p. 444), together with a diagram from which fig. 213 has been prepared. The tests and diagram show the engine now to be in thoroughly good order.

The results are very good indeed; a consumption of 0·80 lb.

of Russoline oil per brake HP hour is superior to that given by the first prize engine at the Cambridge Show.

TESTS OF A 3 HP NOMINAL FIELDING & PLATT OIL ENGINE MADE BY MESSRS. FIELDING & PLATT ON NOVEMBER 22 AND 23, 1894.

Power	Full	Half	Light	Full
Duration of test	1 hour	1 hour	1 hour	3 hours
Revolutions per minute	220	225	230	222
Explosions per minute	100	84	18	100
Nett brake load	63 lbs.	33 lbs.	—	63 lbs.
Diameter brake circle	4 ft.	4 ft.	4 ft.	4 ft.
Brake HP	5·28	2·8	—	5·3
Oil per hour in lbs. (Russoline)	4·75	3·5	1·3	4·24
Oil per brake HP hour	0·90 lb.	1·25 lb.	—	0·80 lb.
Available pressure average of four diagrams, 79 lbs.				

Fig. 213 is a diagram from a similar 3 HP nominal engine taken in a test made on October 22, 1895, which also shows the excellent result of ·8 lb. of oil per brake HP hour. During that test the engine gave 5·5 HP on the brake at 219 revolutions per minute, the compression was 40 lbs. and the maximum pressure of the explosion was 140 lbs., while the available pressure was 63 lbs.

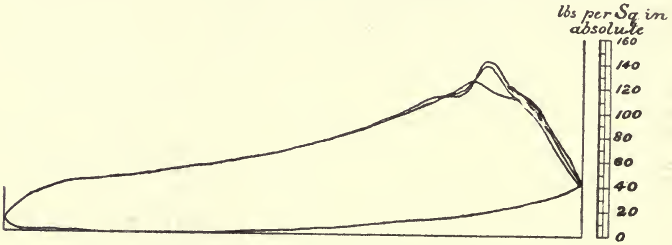

FIG. 213.—Fielding & Platt's Oil Engine (diagram).

Messrs. Fielding & Platt state that ten minutes suffice for the heating of the igniter and vaporiser, and that having started the lamp it is only necessary for the driver to go round the engine and examine and fill up lubricators; after this the vaporiser will be hot enough, and on giving the fly-wheel a turn or two the engine starts. A half compression cam is provided to ease the starting.

This engine is extremely simple, and the timing valve is entirely dispensed with, the igniter tube B being at all times open to the cylinder. The engine is exceedingly economical at light loads as well as at full load.

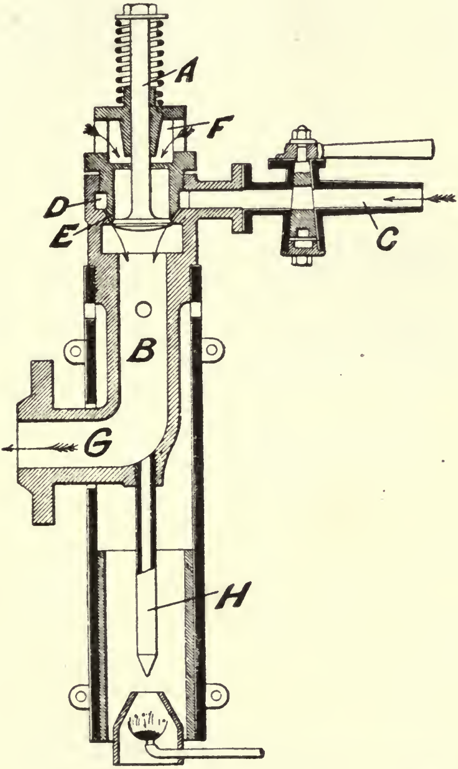

FIG. 214.—Campbell Oil Engine (section through vaporiser and igniter).

Campbell Oil Engine.—The Campbell engine resembles the Tangye engine in its vaporising arrangements. There are only two valves, inlet and exhaust; the air inlet is automatic and the exhaust is operated in the usual manner. In this engine also there are no oil pumps; the vaporiser is fed by gravity, and so is the lamp. Ignition is produced by incandescent tube, and the vaporiser and tube are heated by a lamp. The engine resembles the Tangye in passing the whole of the air charge through the vaporiser to carry off the vapour when formed. Fig. 214 is a section through the vaporiser and igniter tube of the Campbell oil engine. Fig. 215 is a horizontal section showing the exhaust valve and the end of the vaporiser. Fig. 216 is a side elevation of the end of the engine, showing the operation of the governor.

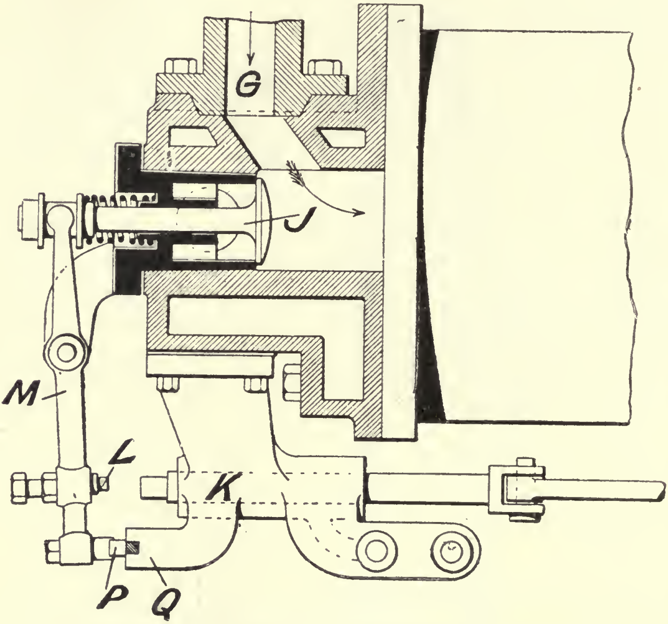

FIG. 215.—Campbell Oil Engine (horizontal section through exhaust valve).

An automatic inlet valve A serves for admission of the whole air charge to the cylinder by way of the vaporiser B and passage G. The oil is fed by gravity and passes through the supply pipe C to an annular channel D round the seat of the valve A, and is injected through perforations E to mix with the air when the valve opens. This valve, like the Tangye, resembles the gas and air valve first introduced by Clerk. On the suction stroke of the engine, air enters by the valve A, and oil entering with it is carried through the vaporiser, and the mixture of inflammable vapour and air passes into the engine cylinder by the passage G ; this passage G leads into the exhaust port, as clearly seen at fig. 215, and thus one port serves for the admission of the charge to the cylinder and the discharge of the exhaust products. The igniter tube H is screwed into the bend of the vaporiser and is always in open communication with it. The lamp which heats the tube also heats the vaporiser, but while at work the heat of the explosions is sufficient to keep up the vaporiser temperature. The explosion ensues upon compression, the inflammable mixture being forced into the hot tube. This engine, however, is found to ignite without the tube after running for some time.

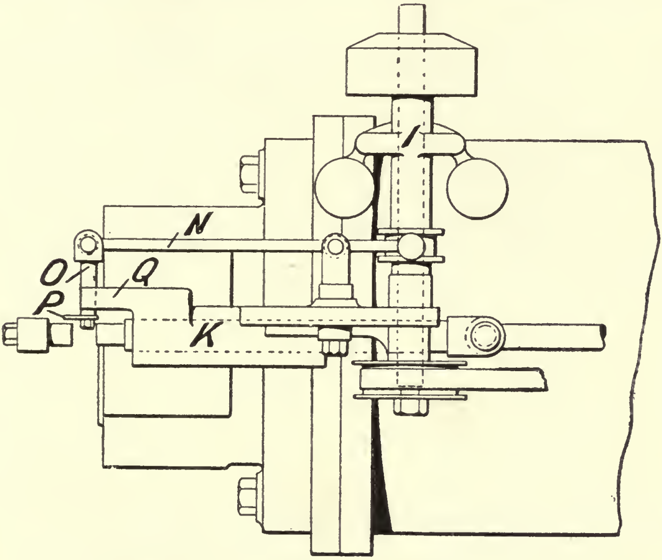

FIG. 216.—Campbell Oil Engine (side elevation of cylinder end).

The governing is accomplished by a ball governor I, fig. 216, which controls the exhaust valve J. This valve is opened at every exhaust stroke by the sliding piece K, which at one end of its stroke strikes the pin L, and by moving the lever M opens the exhaust valve. When the engine speed rises above normal the governor sleeve rises and moves the lever N and link O; this interposes the small plate P between the outer end of the lever M and the stationary bracket Q. The exhaust valve spring is thus prevented from pulling the valve back to its seat until the speed falls again. The holding open of the exhaust valve J thus prevents the suction of a charge of oil and air through the automatic valve A. This engine, like the Tangye, is very simple, but in the author's opinion the oil fed by gravity is troublesome, and in all but small engines is also likely to be dangerous.

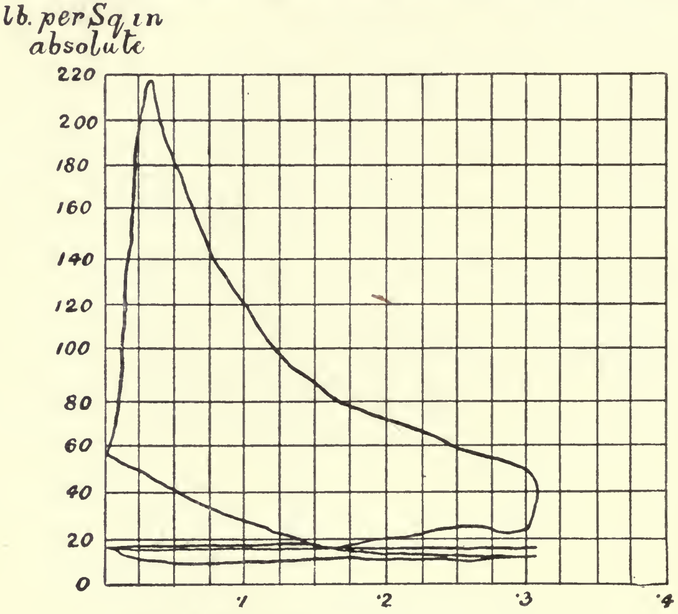

FIG. 217.—Campbell Oil Engine (diagram).

Tests and Oil Consumption.—A Campbell engine was tested at the Cambridge Royal Agricultural Show. The engine was declared as of 6 HP nominal, the diameter of the cylinder was $7\frac{1}{2}$ ins., and the stroke 12 ins. The declared revolutions were 240 per minute. The engine weighed 27 cwts. In a three days' test it gave 4·75 brake HP on an oil consumption of 1·15 lb. Russoline oil per brake HP. In a subsequent full power test the engine gave 4·81 brake HP, and indicated 5·9 horse on a consumption of ·93 lb. of oil per IHP per hour, and 1·12 per brake HP per hour. The average speed during the trial was 207·7 revolutions per minute, and the average pressure developed in the cylinder was 65·5 lbs. Fig. 217 is a diagram taken from the Campbell engine during a two hours' test. The Campbell ran without load at 211 revolutions per minute on a consumption of 2·32 lbs. of oil per hour.

Britannia Oil Engine.—The Britannia engine is the invention of Mr. Roots, and in it also the air heater, vaporiser, and incandescent tube are neatly combined in one casting. The oil feed arrangement too is ingenious, and dispenses with a pump of the ordinary type. Fig. 218 is a section showing the air heater, vaporiser, and ignition tubes, as also the air inlet valve of the engine. Fig. 219 is an end elevation part in section showing the action of the oil feed. Oil is fed to the oil bath A, fig. 219, and is kept at a constant level in that bath by the overflow hole *a*. A spindle B is reciprocated to and fro by the levers C, D, and a cam E on the valve shaft F. The governor lifts the lever G, carrying the trip piece H, shown in dotted lines, and so long as this trip piece is held opposite the operating edge of the lever D, the spindle is moved. When the governor lifts the trip piece the spindle B

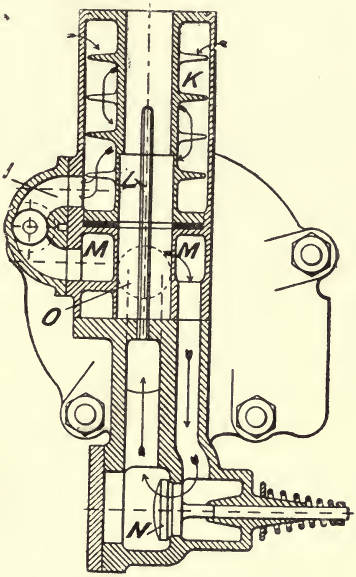

FIG. 218.—Britannia Oil Engine (section through vaporiser).

remains stationary. Grooves *b* are cut round the spindle B; these grooves fill with oil, and on pulling the spindle B through to the chamber I the oil falls off or is blown off by the passing air. This chamber is seen at I in fig. 218 as well as in the end elevation. The upper part of that figure shows a spiral or louvre deflecting plate device, forming part of the casing K; air enters at the upper part, passes over the deflecting plates which are heated by the flame, serving to heat the ignition tube L. The ignition tube L is placed in a circular casing, the upper part of which carries the deflecting plates referred to, and the lower part carries the vaporiser M. The air enters the engine by way of the deflecting plates, passes over them, and becomes heated, then strikes upon the oil supply spindle B and removes the oil from the grooves, carrying it into the vaporiser, and then carrying the oil from the vaporiser M to the air inlet valve N, and thence by the inlet port O to the engine cylinder. Ignition is caused at the proper time by the compression of the combustible mixture into the hot ignition tube L.

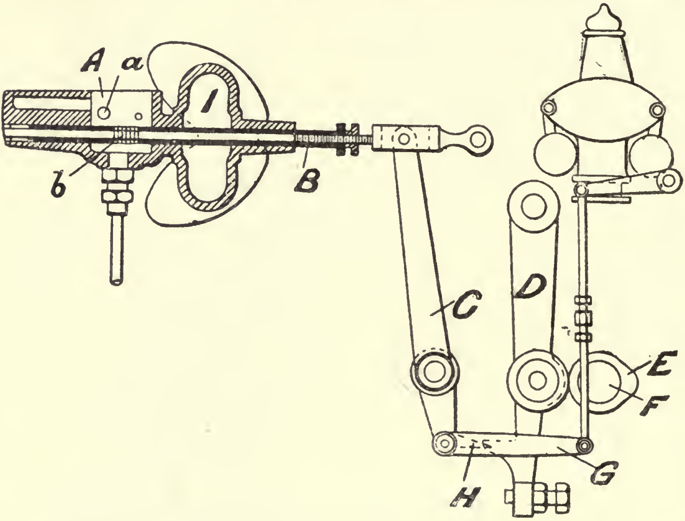

FIG. 219.—Britannia Oil Engine (oil feed and governing).

The lamp used in the Roots engine is shown at fig. 220, which is an elevation part in section. It is of the now standard type like the Etna, and consists of a tube A bent round upon itself to form an elongated loop. At the end B of the loop is arranged a small opening C, in which a conical pin D fits. The point of the pin projects through the small hole E, and so forms an adjustable annular orifice. An oil vessel F is connected to the tube A, and has attached to it a small air pump G. Outside the bent pipe A is a sleeve or hood H open at both ends.

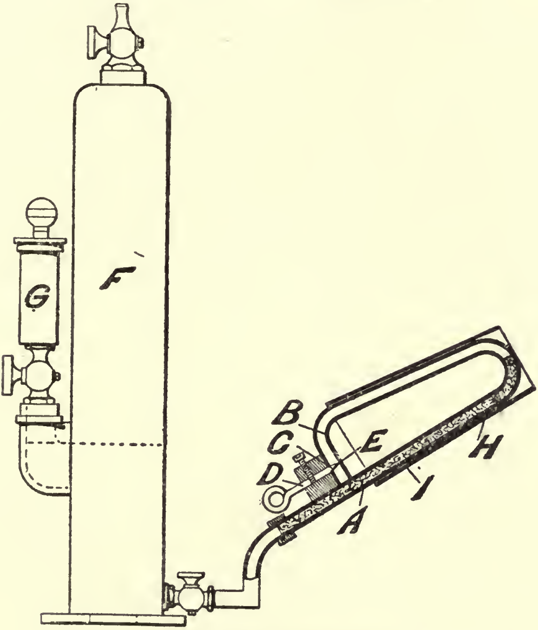

FIG. 220.—Britannia Oil Engine (lamp).

To start the lamp the tube A and hood H are first heated by a piece of waste soaked in oil and lighted. Air is pumped into the reservoir F by means of the small air pump G until the oil is forced through the asbestos I contained in the tube; the oil heats and boils off, discharging as a strong jet at the annular orifice made by the pin D. The jet is lit and the flame heats the bent tube and is discharged out of the hood H as a fierce blue smokeless flame.

This lamp is similar to the others, but the small points of detail peculiar to it are interesting.

The Britannia engine, like the Tangye and Campbell, takes in the whole air charge through the vaporiser.

Tests and Oil Consumption.—One of the Britannia engines was tested at the Cambridge Show; its dimensions were—diameter of cylinder $7\frac{1}{2}$ ins., stroke 13 ins., declared revolutions per minute 235, weight of engine 33 cwts., declared power 7 brake horse. On a three days' test the engine developed on an average 6·15 brake horse and consumed 1·49 lb. of oil (Russoline) per brake horse hour. On the subsequent full power test, lasting for two hours, the engine gave 6·21 brake HP and indicated 8·4 HP. Running at 240 revolutions per minute and giving a mean effective pressure of 47·3 lbs. per sq. in., the oil consumed was

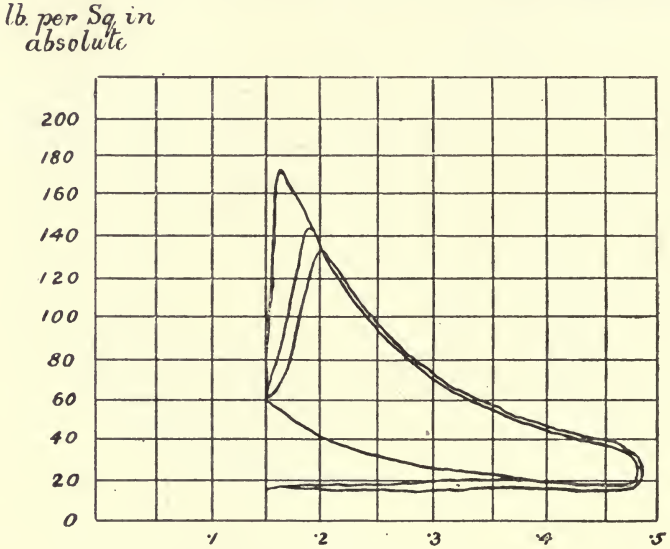

FIG. 221.—Britannia Oil Engine (diagram).

1·25 lb. IHP hour, and 1·68 lb. per brake HP hour. On half power the engine developed 3·96 brake horse, consuming 1·67 lb. per brake horse hour. Running light without load the engine made 256 revolutions per minute, and consumed 1·44 lb. of Russoline oil per hour. It is a somewhat remarkable fact that this engine, which consumed the largest amount of oil per HP of any of the engines tested at the Cambridge Show, ran with no load at full speed on the lowest consumption of oil of any. Fig. 221 is a diagram from this engine taken during the two hours' trial. In the trials this engine was found to require 12 and 13 minutes to start; on one occasion however it took 24½ minutes to heat up for starting.

Clarke, Chapman & Co.'s Oil Engine.—A vertical longitudinal section of this engine is shown at fig. 222, and a transverse section at fig. 223. The engine is peculiar among petroleum engines in dispensing entirely with lift valves and depending for all the operations of the engine upon a rotating plug valve. This valve is rotated by a shaft driven at one fourth of the speed of the crank shaft, and by its rotation the whole of the operations of admission and exhaust are performed; the ignition is obtained by means of the electric spark. Although the vaporising and valve actions of this engine present externally a simple appearance, yet internally they are extremely complex, too complex in the author's opinion to be suitable for the rough conditions of public use. A is the plug valve rotated as described by the valve shaft B. The port A^1 through the valve is the exhaust port which connects by means of another port A^2 with the exhaust pipe. A^3 is one of the air and charge inlet ports communicating by means of a port A^5 with the air supply passage C opening through the throttle valve D to the mixing chamber for air and vapour E. The exhaust discharges by the pipe F round the conical vaporising chamber G and out at the exhaust pipe F′. The air supply is also heated by the exhaust gases, and an air jacket is formed round the exhaust pipe at H. The air, when heated, passes by way of the passage I into the mixing chamber E, and the oil, which is forced from the oil supply reservoir K by air pressure into the vaporiser, is vaporised and passes into the mixing chamber by way of a similar passage L, and there mixes with a further portion of hot

FIG. 222.

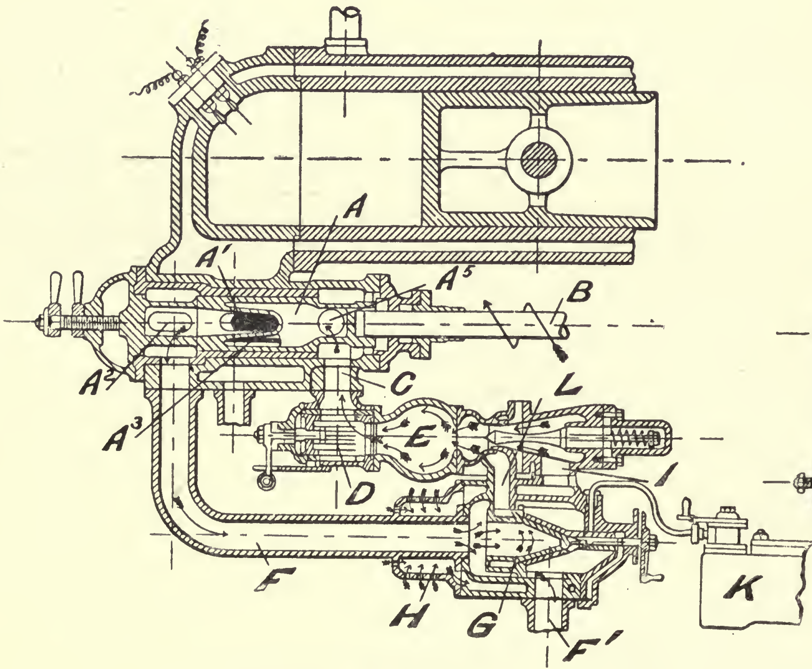

FIG. 223.

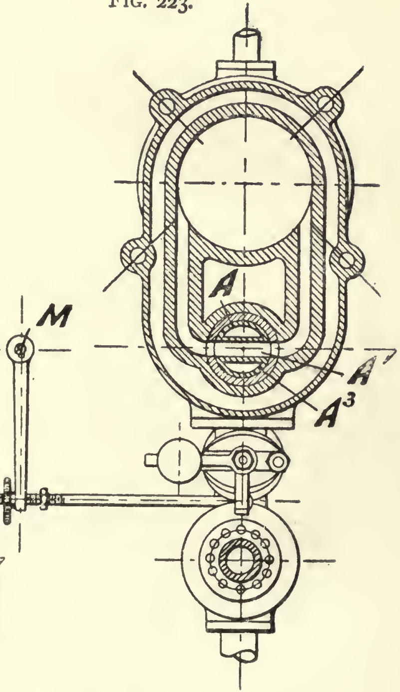

FIG. 222.—Clarke, Chapman & Co.'s Oil Engine (vertical longitudinal section).
FIG. 223.—Clarke, Chapman & Co.'s Oil Engine (transverse section).

air. A small portion of air passes through the vaporiser to carry off the oil vapour, and this portion of air is heated also by the exhaust gases. The engine is governed by throttling the charge admitted by means of the throttle valve D operated from the governor shaft M, and at the same time the oil supply is varied with the air supply. This method of governing is not a good one, and must result in a somewhat high consumption at light loads. The difficulties too of maintaining the working surfaces of a plug valve under the trying conditions operating in a gas engine have prevented plug valves being used to any extent except for the very smallest engines. The author is somewhat surprised that the inventor of this engine (Mr. Butler) should have attempted to use a plug valve under the vastly more difficult conditions of a petroleum engine. To start the engine a small quantity of benzoline is used, which is supplied until all the parts are heated up sufficiently. An engine of this type was exhibited at the Cambridge Show; it was rated at 6 HP brake, the diameter of the cylinder was 7½ ins., and the stroke 12½ ins. The speed was declared to be 350 revolutions per minute. The weight of the engine was 35 cwts. Owing to difficulties with the engine at the Show, however, it was withdrawn from competition.

Weyman & Hitchcock's Oil Engine.—This engine resembles the Hornsby and Robey engines in that the vaporiser is heated by the heat of the explosions and exhaust products only. In it, however, the gases are ignited by an incandescent tube raised to incandescence by a separate lamp. The vaporiser chamber, however, communicates with the cylinder by a valve, and so the engine comes under this particular head. The oil supply is pumped through a sight feed tube D to the top of the vaporiser, as shown at fig. 224, where D is a sight feed tube and C the vaporiser. This oil with a small proportion of air passes round an annular passage, and the oil gradually vaporises as it falls and diffuses into the air accompanying it. The oil charged with vapour rises through a series of holes to a central chamber and then passes through a vapour valve into the cylinder, where it meets with an additional air supply. The ignition tube is heated by an external lamp operated by a powerful air blast produced from an air pump on the engine. Fig. 225 is an end elevation of this engine duly lettered with references printed underneath. From this it will be seen that the engine is of somewhat complex construction.

Tests and Oil Consumption.—An engine exhibited at the Cambridge Show was declared as of 5 brake HP, the cylinder was 6¾ ins. diameter by 13 ins. stroke, and the declared speed was 250 revolutions per minute. On a three days' test the engine developed a mean power of 6·21 brake horse and consumed 1·13 lb. of oil per brake horse hour. The engine took from 14 to 17 minutes to start. At a full-power test lasting for two hours the same engine developed 6·5 IHP, 4·73 brake horse on a mean speed of 259·7 revolutions per minute, and consumed ·87 lb. of oil per IHP hour, and 1·19 lb. per brake HP hour. At half load the engine developed 2·58 brake horse; the oil consumed was 1·57 lb. per brake horse hour. Running without load at 207 revolutions per minute the engine consumed 2·77 lbs. of oil per hour. Fig. 226 is a diagram from the engine.

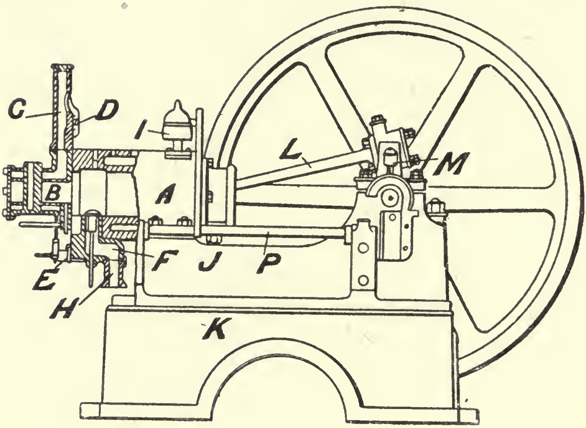

FIG. 224.—Weyman & Hitchcock's Oil Engine (part section).

A, cylinder; B, combustion chamber; C, oil inlet; D, sight feed tube; E, pump; F, main air supply; I, lubricator.

Wells Brothers' Oil Engine.—Fig. 227 is an end elevation of the Wells engine, showing the important parts. Professor Capper, in his report to the Royal Agricultural Society, describes it as follows :

'There is but one rocking lever to actuate all the valves. It is driven by a cam on the lay shaft, in opposition to a powerful spiral spring. When running at normal speed, the spring draws the lever home, closing the exhaust valve, and opening the vapour valve at the required moment. When running too fast, the horizontal catch, which has been lowered, by the outward movement of the valve lever, has not time to rise clear under the weight of its inner end before the return of the vertical lever, which therefore is arrested, and no movement of the valves takes place. The exhaust valve is then kept open, and the vapour valve being

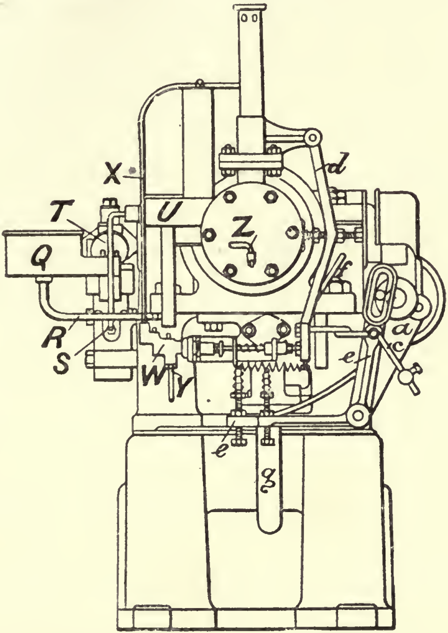

FIG. 225.—Weyman & Hitchcock's Oil Engine (end elevation).

a, side lever ; *c*, governor ; *d e*, rocking levers working oil and air valves ; *g*, air inlet pipe ; Q, oil reservoir for lamp ; R, oil supply pipe to lamp ; S, air blast pipe ; T, air pump ; U, lamp reservoir ; W, oil pump ; X, oil pump discharge ; Y, oil supply pipe ; Z, pet cock.

closed, an idle stroke occurs, the oil valve at the same time emitting a charge from the vaporiser. The oil valve is a rotating taper plug, driven by a link off a rocking lever. A cavity in this plug measures out a charge of oil at each vibration, and drops it upon a heated diagonal plate, down which it runs and is vaporised. An adjustment is provided by which the quantity of oil at each charge can be regulated, and the valve box is filled by gravity from a raised tank. This arrangement is secure against injury from dirt, as anything that is small enough to pass into the oil plug would simply fall to the bottom of the vaporising chamber, and there be retained. The lamp which heats the vaporiser is completely inclosed in a cast-iron combustion chamber, the blast being supplied by an air pump.' 'The makers claim that little, if any, gasification takes place, as the vaporiser is water-jacketed, and so not overheated. This view is to some extent upheld by the fact that the cylinder works without lubrication, beyond that of inclosed oil vapour.'

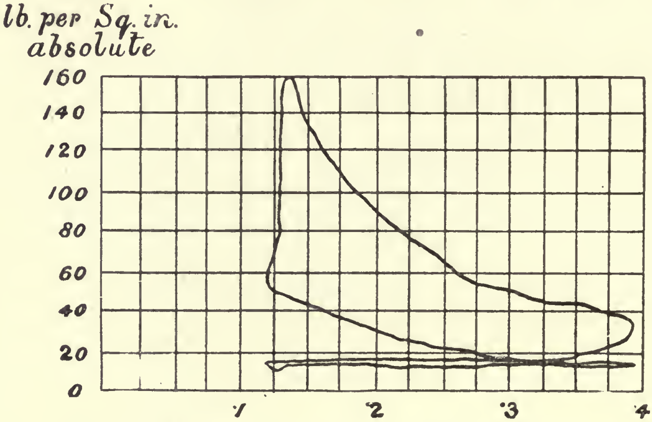

FIG. 226.—Weyman & Hitchcock's Oil Engine (diagram).

Tests and Oil Consumption.—An engine of this type was exhibited at the Cambridge Show of a declared 4 HP nominal. The cylinder was 8¼ ins. diameter, and 15 ins. stroke, the declared speed being 165 revolutions per minute. This engine gave on the three days' test a mean power of 5·96 horse, and consumed 1·06 lb. of oil per brake horse hour. The engine was very easily started, starting usually in from 10 to 17 mins. A full-power test of two hours gave an indicated power of 7·3, and a brake power of 6·46 horse, the oil consumption being ·93 lb. per IHP per hour and 1·04 per brake horse hour. The engine ran at an average speed of 184 revolutions. At half-power 3·52 brake horse was given, and a consumption of 1·59 lb. of oil per brake horse. Running without load the engine used 1·96 lb. of oil per hour at 165 revolutions per minute. Fig. 228 is a diagram taken from the Wells engine.

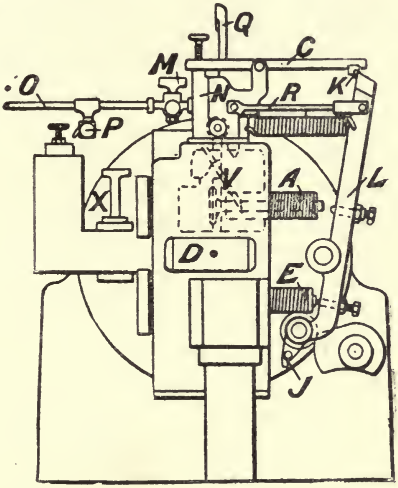

A, vapour valve ; C, horizontal catch ; D, vaporiser door ; E, exhaust valve ; K, trip ; L, rocking lever; M, oil supply cock ; N, oil supply chamber ; O, oil supply pipe ; P, oil supply to lamp ; Q, automatic explosion counter ; R, link working oil valve ; V, vaporiser.

FIG. 227.—Wells Oil Engine (end elevation).

Applications of Petroleum Engines.—Petroleum engines have now been applied, in addition to the ordinary purposes for which stationary engines are required, to the propulsion of launches, and for actuating road carriages. Most of the launch engines use gasoline or other light oil, and so present no peculiarities which need be studied here. It will be observed that the author has not described any of the oil engines produced on the Continent or in America. These engines are without exception engines of the ordinary gas engine type using gasoline or other light oils which require no special precautions, and indeed are not interesting as bearing on the question of safe heavy oil engines. The engines on the Continent and in America which use heavy oil are those already described in this chapter or engines following the same lines. Many ingenious details are used in the foreign oil engines, but as yet British inventors appear to have taken the lead in the task of devising means of utilising the safe lamp oils of commerce. This probably is due to the somewhat severe legal restrictions placed upon the sale and storage of such light and inflammable oils as gasoline, benzine or petroleum spirit, restrictions which do not exist in the laws of America or France. The principal engine used upon the Continent for marine purposes is that of Daimler.

The Daimler engine is a small two-cylinder engine; the two cylinders incline at an angle of about 30° to each other, and the connecting rods operate on a common crank pin. The front ends of the cylinders are closed in, and the front ends act as air pumps. The Otto cycle is performed by each piston, but each cylinder is supercharged with air to a pressure of a few pounds above atmosphere, the air being supplied from the front of the piston. By this device a high average pressure is obtained, but light oil is used so that no special vaporising arrangements are required.

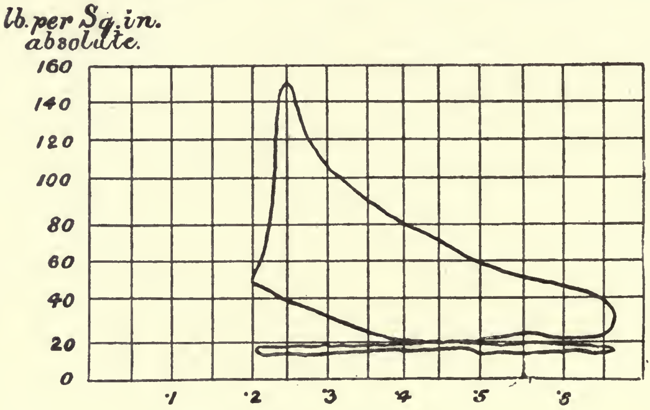

FIG. 228.—Wells Oil Engine (diagram).

The Daimler Motor Carriage.—The Daimler motor carriage has come into considerable prominence in connection with the recent trials of horseless carriages in France. The author has carefully examined one of these carriages, and finds that it contains one of the ordinary two-cylinder Daimler light oil motors, which is mounted with its crank shaft axis parallel to the length of the carriage. The engine is started by a handle projecting from the front of the carriage, which handle drives a spindle by pitch chain. When the engine starts, it puts a stop out of gear and disconnects the chain. The engine shaft gears into a friction clutch, which can be drawn in and out to disconnect the engine from the carriage wheels. The back wheels of the four-wheeled carriage are driven by a shaft carried across the centre of the carriage, and operated from the engine-driving spindle by bevil wheel and opposing bevil wheels so geared as to form a reversing arrangement by engaging on one or other side of the engine bevil wheel. The spindle carrying the engine bevil wheel is geared to the engine shaft by means of change wheels of the ordinary pinion and spur wheel type, four sets of wheels being provided which may be geared one pair at a time to give four different speeds without varying the speed of the engine. The two front wheels are steering wheels, and are operated by a lever somewhat like that used to steer a Bath chair. The rear driving wheels of the carriage are geared to the cross shaft by pitch chains. The engine uses light oil contained in a small reservoir in front of the driver. The mixture is ignited by means of two platinum tubes heated to incandescence by an oil flame of the Bunsen type. The engine when started runs at a constant speed, and the whole of the operations of the carriage are performed by means of levers, clutches, change wheels and brakes. In the author's opinion this carriage, ingenious as it is, will not find much use in England. A carriage, however, using heavy oils and overcoming the difficulties would probably be very successful.

CHAPTER III.

THE DIFFICULTIES OF OIL ENGINES.

THE reader will have observed from the description of thirteen different examples of oil engines given in the preceding chapter, and the details of oil consumption and efficiency, that the oil engine is not so economical from a heat engine point of view as a gas engine; that is, the oil engine so far, for a given number of heat units entrusted to it as oil, does not convert so large a proportion of those heat units into indicated work as a gas engine. It is to be remembered, of course, that as yet engineers have had little experience in oil engines as compared with gas engines, and that probably with further development of detail the heat efficiency of the oil engine may yet be considerably increased. The lower efficiency at present obtained is due to certain difficulties peculiar to the oil engine, which do not occur in the gas engine. These difficulties are present to some extent in all the three types of engine, but in some types to a greater extent than in others. In the earlier engines ignition presented a formidable difficulty, which was overcome by the use of the electric spark. Electric methods of ignition are very objectionable whether used in gas or oil engines; so objectionable, indeed, that no gas engine at present manufactured in Britain uses an electric igniter. Electric igniters require a battery, an induction coil and insulated points, or an electro-magnetic device, and insulated points with a contact-breaking contrivance. Either of these forms can be made to work quite well in an engineer's hands or in the hands of anyone used to batteries and dynamos, and willing at the same time to devote considerable attention to keeping the apparatus in order. The public in this country, however, who use gas and oil engines are very liable to allow electric contrivances to get out of order, and it has always been the author's opinion that any engine with an electric igniting device, even if good in other respects, would not attain extended use in Britain. Curiously enough this objection does not seem to weigh much with the Continental public or with the American public, as many engines are sold on the Continent and in America which use electric igniting devices. The nature of safe burning oil made it very difficult to use either a flame device for igniting or an incandescent tube for that purpose. It was by no means easy and evident to see in what way safe heavy oil could be treated to give a smokeless heating flame of the character necessary either for flame ignition or incandescent tube ignition. The production of the type of lamp described at page 431 gave, however, an easy means of producing a smokeless heating flame, and so at once made it possible to use that simplest of all igniting devices, the incandescent tube. In the author's opinion the incandescent tube igniter is by far the best adapted both for oil and gas engines, and now that simple lamps have been produced to give a smokeless flame the incandescent tube is bound to displace all other forms of ignition for oil engines. The type of lamp referred to also seems to the author to be the best yet proposed, as it gives a powerful smokeless flame from heavy oils, and that without the use of the troublesome air blast. In many of the earlier forms of the engines described, an air blast was used somewhat in the manner shown at fig. 194 and described as the Griffin oil sprayer lamp. So far, then, as the present engine is concerned, the difficulty of igniting may be considered as thoroughly overcome in a manner which is not likely to be greatly improved upon, and so far as the ignition is concerned there is nothing which prevents greater economy from being obtained. The difficulties which prevent immediate improvement in economy are to be found in all cases in the methods of vaporising. Some inventors claim to gasify wholly or partly the oil which is sent into the engine cylinder, and others claim that the oil so sent in is merely vaporised and not gasified. The author has examined all the standard types of oil engine now in use, and from his own experiments he is convinced that in not one of the engines does any real gasification take place; in all the thirteen engines referred to the oil is vaporised, not gasified. In some of the engines the oil may be 'cracked' to a small extent, so that the vapours produced are those of lighter hydrocarbons than were present in the original oil, but no cracking which can take place in any of these engines is anything like sufficient to carry decomposition far enough to produce gas instead of vapour.

These engines have been classified by reference to the method of vaporisation peculiar to each, and each type, although it presents a satisfactory solution of the vaporising difficulty, involves additions to the ordinary gas engine cycle which are accompanied by characteristic limitations or disadvantages. Thus the first type of oil engine using safe oil, 'engines in which the oil is subjected to a spraying operation before vaporising,' is also first in the order of invention, and it naturally presents the most complex solution of the vaporising difficulty. In this type of engine, represented by the engines of Messrs. Priestman and Samuelson, the whole air supply of the engine is passed through a heated chamber, and according to Professor Unwin, in one of his tests, the air leaving this heated chamber before it enters the engine cylinder is raised to a temperature of 287° F. The chamber is heated by the exhaust gases from the engine, which gases in this experiment were at a temperature of 600° F.; the oil to be vaporised is injected into the heating chamber, by means of a smaller quantity of air, in a state of very fine spray, as has been described in the preceding chapter. The whole of the oil used is therefore mixed with the air passing into the engine in minute particles of spray, each of these minute particles of sprayed oil being surrounded by an atmosphere of air at a temperature of nearly 290° F. Each oil particle thus has an ample atmosphere of air surrounding it at this high temperature, and thus each particle rapidly evaporates and passes from the state of spray to the state of oil vapour uniformly diffused throughout the air charge. The device produces very perfect vaporisation, but it has the great disadvantage that the whole of the inflammable charge entering the cylinder becomes heated to 290° F. while still at atmospheric pressure. From this it follows that upon compressing the mixture in the cylinder the temperature of compression rises to a much higher point for a given pressure than is the case with a gas engine charge working at that pressure.

In the gas engine the charge enters the cylinder at atmospheric temperature, and is only heated to a slight extent by the inclosing walls. In the case of the oil engine the entering charge is heated to begin with, and is likely to absorb further heat from the piston as it enters. This has the effect of reducing the total weight of charge present in the engine cylinder at each stroke, and therefore it reduces the average available pressure to be obtained from the engine. In the Priestman engine, for example, the best result obtained in Professor Unwin's experiments give only a mean available pressure of 45 lbs. per square inch throughout the stroke with a compression pressure of 27 lbs. It is worth noting that a compression pressure of 27 lbs. was used in a Priestman engine at a time when the usual compression pressure in gas engines ranged from 40 to 50 lbs. This low pressure necessarily involves less economy than the high pressure, and the reason why a low pressure is adopted is found in the fact that at higher pressures an oil engine operating by the spray method is very liable to premature ignitions. This is partly because of the ready inflammability of a mixture of air and heavy oil vapour, and partly because of the higher temperature of compression due to the preliminary heating of the whole charge in the vaporiser. An oil and air charge is much more liable to spontaneous ignition during compression than a gas and air charge, and the preliminary heating of the whole charge to about 80° F. above the boiling point of water necessarily increases the temperature obtained by compression, and this higher temperature tends to make the charge ignite prematurely.

It is interesting to note that with Daylight oil Professor Unwin found a pressure of compression of 35 lbs. per square inch more suitable than 27 lbs. This is doubtless due to the fact that lighter oils such as Daylight oil when vaporised approximate more nearly to the gaseous condition, and are therefore less easily subject to premature ignition than the heavier oils.

One difficulty, therefore, caused by the spray method of ignition lies in the limitation of the weight of the charge by preliminary heating, from which follows the production of a lower average pressure; another difficulty lies in the limitation of the compression pressure due to the property of spontaneous ignition, which is made more marked by the preliminary heating. These difficulties prevent the attainment of greater economy by the first method of vaporising.

This method, however, presents other difficulties of a practical kind. Thus a large volume of charge is formed in the vaporiser in explosive proportions, and the whole of this charge is liable to be ignited in the event of a back explosion from the engine cylinder while the charging stroke is proceeding. This is a serious difficulty, and has caused in gas engines the practical abandonment of all engines in which a reservoir of gas and air is used to feed the engine cylinder.

A further difficulty occurs in governing the engine. As the exhaust gases are used to heat the vaporiser, by means of a jacket surrounding the vaporiser chamber, it follows that the ordinary method of governing practised in the gas engine is inapplicable. Messrs. Priestman accordingly produce ignitions under all circumstances, whether their engine be light or loaded; that is, instead of cutting out impulses by stopping off the oil supply completely, they reduce both oil and air supply simultaneously, and by so doing reduce the pressure at which the cylinder is filled with inflammable mixture before compression begins. The proportion of oil and air admitted is kept as nearly as possible constant, but the compression pressure is continuously reduced and produces weaker and weaker impulses. This is clearly shown in the diagram, fig. 191, page 417, where the full-power diagram is shown by a heavy black continuous line, the half-power diagram by a dotted line, and the diagram produced when the engine is running light by a thin full line. This method is by no means an economical one, and results in a heavy consumption of oil even at light loads. In Professor Unwin's test, for example, it was found that the engine consumed 6½ lbs. to 7 lbs. of oil per hour when working at full power; and when working giving no power at all, only driving itself at full speed, the oil consumption was still 5 lbs. This of course is a very poor result, the engine using almost as much oil without load as at full load; in fact in Unwin's test there was no difference in oil consumption between half power and no load at all. This is a difficulty, however, which is common to all gas engines as well as oil engines in which the charge is supplied from an intermediate reservoir of considerable capacity. With such a reservoir it is evident that the governing cannot be effected by simply cutting off the gas supply, as if the governor had acted the engine would still receive one or more charges and give one or more impulses after the governor had signalled that it was running too fast. In the same way, when the governor put the gas or oil supply on fully again, the engine had to make several revolutions before the mixture reached the cylinder. This causes serious irregularity as well as loss of gas due to imperfect mixture at the time of governing.

Messrs. Samuelson endeavour to avoid this difficulty of governing by holding closed the exhaust valve, and keeping the inlet valve closed. In this way the piston expands and compresses the exhaust gases without taking any charge from the vaporiser. This method of governing, however, is not satisfactory, because of the difficulty of keeping a constant charge in the vaporiser while the engine is governing. A further difficulty is due to the fact that when the explosions cease exhaust gases no longer pass round the vaporiser, and the temperature rapidly falls, so that it is liable to get much too cool for the effective performance of its work. This difficulty affects the Priestman engine to a lesser extent because of the continuance of the explosions, but even there the temperature of the vaporiser falls considerably when the engine is running with light loads or no load at all.

In the author's opinion the spray method of vaporising as hitherto carried out is the least satisfactory of all the methods of vaporising, and the second and third methods present considerable advantages over it, both in simplicity and effective operation.

The second type of oil engine comprises 'engines in which the oil is injected into the cylinder and vaporised within the cylinder.' The engines constructed under this type represented by the Hornsby, the Robey, and the Capitaine engines, distinctly advance upon the spray method of vaporising, but they also present difficulties of a somewhat formidable kind. The Hornsby-Ackroyd engine, for example, tested at the Royal Agricultural Society's Show gave a mean available pressure throughout the stroke of only 29 lbs. per sq. in. This of course necessitates a large cylinder for a given power. The mean pressure, it will be observed, is lower than that given by Class I., and this although the compression pressure is much higher. The Hornsby engine gave a compression pressure of 50 lbs. per sq. in, and should have given a higher average pressure than that of Class I. but for certain peculiarities which have now to be considered. In this type of engine the walls of the combustion space are allowed to attain a temperature of nearly 800° C., sufficient to cause effective vaporisation and also to allow of ignition when compression is completed. The air charge entering the cylinder in the Hornsby engine does not pass through the combustion space, but passes directly into the water-jacketed cylinder. The air, therefore, is not heated up by passing through the vaporising chamber; the exhaust gases of the previous explosion, however, are kept at a very high temperature in the combustion chamber, which chamber is cut off to a certain extent from the main cylinder by the bottle neck seen at fig. 195, page 421. The cause of the low available pressure, however, is not due to heating of the air while entering, the cylinder, as that heating only occurs to a slightly greater extent than in the case of the gas engine. The real cause of the low average pressure is imperfect mixing of the air charge with the oil vapour. The oil is injected into the combustion space A during the charging stroke of the piston. It rapidly evaporates because of its contact with the highly heated walls, and it diffuses among the hot exhaust gases contained in the combustion space. As there is, however, very little oxygen present in that space at the moment of vaporising, there is no danger of premature ignition. Ignition is not possible until air has been forced from the cylinder through the bottle neck to supply oxygen sufficient for the combustion of the vaporised oil. As the compression proceeds, more and more air mixes with the vaporised oil, and sufficient oxygen is forced into the combustion chamber to properly burn the oil vapour charge. A certain amount of oxygen, however, and nitrogen remains outside the combustion chamber in the space between its limits and the piston, and so the cylinder is not filled with a uniform inflammable mixture. The mixture produced within the combustion chamber is also less perfectly mixed with the air than the charge in a gas engine cylinder, and accordingly to insure complete combustion of the whole charge, a much larger proportion of oxygen is necessary than in the gas engine. The average pressure of the explosion is thus considerably reduced.

The reduction of average pressure would not matter much if the only requirement were a larger diameter of cylinder; that is, an increased diameter without corresponding increase of the strength of the crank, connecting rod, and engine frame; unfortunately, however, in the case of an oil engine or a gas engine the effect of a double charge has always to be well kept in mind. Such a double charge would raise the maximum pressure to an unsafe point for a given diameter of cylinder unless the parts were made sufficiently strong to resist this possible contingency. In the oil engine, for example, an explosion might be missed and a double charge of oil vapour would be left in the cylinder, and so the maximum pressure of the next explosion greatly increased. Engines of Class II. have, therefore, large cylinders and heavy parts in proportion to the power developed by them. Their economy also is not proportional to the compression pressures used.

The governing difficulty is also much felt in this type of engine. Here it is possible to stop the oil supply and cut out explosions just as in the case of a gas engine, but the effect of this is to cause the walls of the combustion space to be rapidly cooled down at light loads. Most of the engines of this kind work well at full or intermediate loads, but at light loads the combustion space walls may become so cool that ignition fails and the engine stops. Messrs. Hornsby have got over this difficulty to a very great extent, but it is a difficulty which is quite formidable in this type of engine. If the combustion chamber be so arranged and shaped that its walls are sufficiently hot when the engine is running without load, they are very apt to be overheated at full loads. The skill of the makers of these engines is well shown in proportions calculated to keep the combustion space walls hot, and yet not too hot.

The fundamental idea of this type of engine is extremely fascinating and simple, but considerable complexities arise in carrying it into effect, which greatly detract from the advantages.

In the author's opinion this type of engine will always be somewhat heavy and large for the power developed, as it is difficult to see how greater average pressures are to be obtained, or how greater economies are to be expected by reason of any modifications of the type.

The third type of oil engine comprises 'engines in which the oil is vaporised in a device external to the cylinder, and introduced into the cylinder in a state of vapour.' Engines of this class, in the author's opinion, furnish the simplest and most effective solution of the problems involved in oil engine construction. Even this class, however, presents two divisions. The first division includes the engines of Messrs. Crossley Brothers, and Fielding & Platt. In these engines oil is injected into a heated vaporiser consisting of either a series of tubes or a series of tubular passages. These tubes or passages are heated by the waste heat of the oil lamp used for the incandescent tube. The oil is injected at one end of the series of passages together with a small quantity of air, and a small further quantity of air is heated up by an air heater before reaching the oil; this hot air passes through the vaporiser part of the tubes, and evaporates the oil and carries a charge into the engine cylinder in a state of vapour. The main air charge enters the cylinder by a separate valve, so that only a very small part of the air charge is heated and passed in with the oil. By this arrangement the engine cylinder itself and all the surfaces in contact with the charge are water-jacketed, just as in the case of the gas engine. The oil vapour and heated air entering at a port mix with the cold air entering at a separate valve, and no doubt some little precipitation of the oil vapour will occur because of the cold air impinging upon the hot air saturated with inflammable vapour. This precipitation, however, will be in the state of very fine mist indeed, and on the compression of the charge the rising temperature of compression will speedily cause the vapour to be formed again. This method of vaporising has the advantage that the air charge is heated up to the smallest possible extent consistent with forming an explosive charge by means of heavy oil. The compression can thus be increased to a greater extent than in the first two classes without danger of premature ignition, and so much higher average pressures are rendered possible. Accordingly we expect to find a higher average pressure in this engine than in the others. Messrs.

Crossley obtained 72 lbs. per sq. in. mean pressure with an explosion pressure of 225 lbs. and a compression pressure of 65 lbs., while Messrs. Fielding & Platt obtain a mean pressure of 63 lbs. with a compression pressure of 40 lbs. This method of operation also has the advantage that it allows of the usual gas engine mode of governing, viz. by cutting out explosions. That the governing is effective and economical is seen from the fact that a Crossley engine which used 9·9 lbs. of Russoline oil per hour, running at full load, only used 2·53 lbs. per hour running at full speed without load, both figures including the oil for operating the heating lamp. The Crossley engine tested was rated at 7½ HP. A 3-horse engine tested by Messrs. Fielding & Platt, which consumed 4·75 lbs. of Russoline oil per hour at full load, ran without load on 1·3 lb. per hour. These results show governing almost if not quite presenting the same proportional economy as a gas engine.

The second division includes the engines of Messrs. Tangye, Campbell, the Britannia Co., Clarke, Chapman & Co., Weyman & Hitchcock, and Wells Bros., and in these engines in all cases except one (Clarke, Chapman & Co.) the whole air charge of the engine passes through the vaporiser on its way to the cylinder. This method of operating as carried out by Messrs. Tangye and Campbell has certainly the advantage of great simplicity, but it appears to have a disadvantage of less perfect vaporisation than is given in the first division. At least a comparison of the oil consumption of the different engines seems to point to this. For instance the Crossley and Fielding & Platt's oil engines respectively consume ·82 and ·90 lb. of Russoline oil per BHP hour, while the Campbell, Britannia, Wells, Weyman & Hitchcock engines consume respectively 1·12, 1·68, 1·04, and 1·19 lb. of oil per BHP hour. The engines of the second division thus consume uniformly more oil per BHP hour than those of the first division.

In the author's opinion this is partly caused by the fact that the whole air charge is drawn through the vaporiser, and partly by the fact that in all of these engines the explosion pressure has free access to the vaporiser up to the inlet valve. By drawing the whole of the air charge through a vaporiser with no preliminary heating or only a slight preliminary heating, the temperature of the air is so low that it does not assist in any way the vaporising of the charge, but rather retards it. As pointed out in Chapter I. of this Part of the book, air can only take up oil vapour sufficiently to saturate it at the particular temperature of the air; and as the tension of oil vapour is very low at the temperature of the atmosphere, the air does not really help in vaporising, but rather tends to condense the vapour formed by the hot walls of the vaporiser. The oil, therefore, which is taken into the cylinder is taken in partly as vapour and largely as a somewhat heavy spray. This heavy spray readily falls on to the walls of the cylinder and produces a less perfect charge.

The fact of keeping the vaporiser open to the explosion right up to the inlet valve has the same effect in an oil engine as it would have in a gas engine; that is, it increases the port surfaces so much as to seriously cool the flame of the explosion when the explosion occurs. These two causes are, in the author's opinion, the principal causes of the higher consumption of the second division of this class.

To make this type of vaporiser effective the air would require to be heated to a considerable temperature before entering the vaporiser, and this would of course introduce the difficulties which have been already referred to in discussing Class I. A valve, it is true, might be placed between the explosion port and the tubular or passage port of the vaporiser, and this would undoubtedly improve the economy while running loaded, but it would also increase the difficulty of effective governing. This type of engine as described is readily governed, and very high economies are obtained running without load. To make the comparison more readily evident, the author has prepared the table on page 473, which contrasts the leading facts connected with the three classes of engine.

Oil Engine Improvements.—The reader must not suppose that in the preceding discussion the author is in any way undervaluing the great progress which has been made in oil engine construction. Greater improvements are to be made in oil engines than in gas engines, but inventors are rapidly overcoming all the difficulties, and the oil engine of to-day is a very effective

Comparison of Oil Engines.

	Class I.	Class II.	Class III. Div. I.	Class III. Div. II.			
Oil consumption per BHP hour	·95 lb.	·98 lb.	·82 lb.	1·12 lb.	1·68 lb.	1·04 lb.	1·19 lb.
Oil consumption per IHP hour	·86 lb.	·81 lb.	·73 lb.	·93 lb.	1·25 lb.	0·93 lb.	·87 lb.
Mean available pressure . .	45 lb.	29 lb.	72 lb.	65·5 lb.	47·3 lb.	49·6 lb.	46·1 lb.
Explosion pressure	130 lb.	112 lb.	225 lb.	200 lb.	155 lb.	135 lb.	145 lb.
Compression pressure . .	27 lb.	50 lb.	65 lb.	40 lb.	45 lb.	32 lb.	38 lb.
Power of engine	7 BHP	8 BHP	7½ BHP	4·8 BHP	6·2 BHP	6·5 BHP	4·7 BHP
Name of maker .	Priestman	Hornsby	Crossley	Campbell	Britannia Co.	Wells	Weyman
Weight . .	36 cwt.	40 cwt.	32½ cwt.	27 cwt.	33 cwt.	36½ cwt.	26 cwt.

and reliable machine. It is idle to deny, however, that further improvements are possible, and the author's object is to point out the difficulties as clearly as possible in order to aid inventors in working on correct lines. Improvements in vaporisers will probably take the form of obtaining a very complete cracking of the oil, tending to charge the cylinder with vapours of lighter oils than those introduced into the vaporiser. This process will supply the engine with oils capable of withstanding higher compressions than are at present used without premature ignitions. Every effort will be made also to keep all parts of the cylinder cool and water-jacketed as with the gas engine. The heating lamp is also capable of improvement, and efforts should be made to produce a flame of the Bunsen or smokeless type, giving less noise than at present. Oil engine inventors will pay more attention to the now well-understood principles of gas engine design, and will accordingly do away as much as possible with all long ports or increased surfaces in contact with the flame of the explosion.

APPENDIX I

ADIABATIC AND ISOTHERMAL COMPRESSION OF DRY AIR.

(*Professor R. H. Thurston, Journal of Franklin Institute*, 1884.)

One hundred volumes of dry air at the atmospheric mean temperature of 15·5° C. and 14·7 lbs. per square inch undergo change of volume without loss or gain of heat. The temperatures and volumes corresponding to various pressures are given. Also the volumes at the various pressures if the temperature remained constant at 15·5° C.

Absolute pressure in lbs. per sq. inch	Temperature of compression in Centigrade degrees	Volume at temperature and pressures preceding	Volume if temperature constant at 15·5°
14·7	15·5	100·0	
15·0	17·26	98·58	98·00
20·0	42·60	80·36	73·50
25·0	64·76	68·59	58·80
30·0	82·10	60·27	49·00
35·0	98·38	54·01	42·00
40·0	113·86	49·13	36·75
45·0	126·54	45·18	32·67
50·0	138·96	41·93	29·40
55·0	150·53	39·19	26·73
60·0	161·38	36·84	24·50
65·0	171·61	34·80	22·62
70·0	181·29	33·02	21·00
75·0	190·49	31·44	19·60
80·0	199·26	30·03	18·38
85·0	207·66	28·77	17·29
90·0	214·71	27·62	16·33
95·0	223·45	26·58	15·47
100·0	230·91	25·63	14·70
125·0	264·66	21·88	11·76
150·0	293·91	19·22	9·80
175·0	319·87	17·23	8·40
200·0	343·31	15·67	7·35
225·0	364·71	14·41	6·53
250·0	411·57	13·38	5·88
300·0	420·34	11·75	4·90
400·0	480·76	9·58	3·90
500·0	531·21	8·17	2·94
600·0	574·93	7·18	2·45
700·0	603·74	6·44	2·10
800·0	648·80	5·86	1·84
900·0	680·85	5·39	1·63
1000	710·49	5·00	1·47
2000	929·67	3·06	0·74

ANALYSIS OF COAL GAS.

(*T. Chandler, Watts' 'Dict.' Supp.* 3, *Part* 1.)

	Heidelberg	Bonn	Chemnitz	London	
				Ordinary coal gas	Cannel gas
	vols.	vols.	vols.	vols.	vols.
Hydrogen, H . .	44·00	39·80	51·29	46·00	27·70
Marsh gas, CH_4 . .	38·40	43·12	36·45	39·50	50·00
Carbonic oxide, CO .	5·73	4·66	4·45	7·50	6·80
Heavy hydrocarbons	7·27	4·75	4·91	3·80	13·00
Nitrogen, N . . .	4·23	4·65	1·41	0·50	0·40
Carbonic acid, CO_2 .	0·37	3·02	1·08	—	0·10
Water vapour, H_2O .	—	—	—	2·00	2·00

ANALYSIS OF LONDON COAL GAS.

(*Humpidge.*)

	Sample (A)	Sample (B)
	vols.	vols.
Hydrogen, H	50·05	51·24
Marsh gas, CH_4	32·87	35·28
Carbonic oxide, CO	12·89	7·40
Olefines	3·87	3·56
Nitrogen, N	—	2·24
Carbonic acid, CO_2	0·32	0·38

ANALYSIS OF BERLIN AND NEW YORK COAL GAS.

	Berlin	New York Municipal Gas Light Co.
	vols.	vols.
Hydrogen, H	49·75	30·30
Marsh gas, CH_4	32·70	24·30
Carbonic oxide, CO	0·54	26·50
Ethylene, C_2H_4	4·61	15·00
Nitrogen, N	0·68	2·40
Carbonic acid, CO_2	2·50	1·00
Oxygen, O	0·22	0·50

ANALYSIS OF NATURAL GAS FROM GAS WELLS IN PENNSYLVANIA.

(*Watts' 'Dict. of Chemistry,' Supp.* 3, *Part* 2.)

	Burns Butler Co.'s well	Lechburgh Westmoreland Co.	Harvey Butler Co.
	vols.	vols.	vols.
Carbonic acid, CO_2 . .	0·34	0·35	0·66
Carbonic oxide, CO . .	trace	0·26	—
Hydrogen, H . . .	6·10	4·79	13·50
Marsh gas, CH_4 . . .	75·44	89·65	80·11
Ethylene, C_2H_4 . . .	18·12	4·39	5·72
Hydrocarbons composition not stated . . : .	—	0·56	—

APPENDIX II

TABLE I.—COMPOSITION OF COAL AND CANNEL GASES. P. F. FRANKLAND. 1882–4.[1]

Town	Reputed illuminating power in standard candles	Hydrocarbons Cn. Hm.	Equivalent in ethylene, C_2H_4	Average formula of Cn. Hm. or		Carbonic anhydride CO_2	Oxygen	Nitrogen	Hydrogen	Carbonic oxide CO	Marsh gas CH_4	Ratio of illuminating power equivalent of C_2H_4 per cent. or 1 per cent. C_2H_4 =standard candles	Price per 1,000 cubic feet
				Carbon density	Hydrogen density								
Edinburgh	30?	12·23	16·55	2·71	5·38	0·35	1·00	3·64	33·24	6·61	42·93	1·81	3*s.* 10*d.*
Glasgow	27	10·00	13·40	2·68	5·09	0·29	0·06	3·07	39·18	7·14	40·26	2·01	3*s.* 8*d.*
St. Andrews	27	10·04	13·71	2·73	5·09	2·73	0·48	2·83	36·63	5·16	42·13	1·97	4*s.* 2*d.*
Liverpool	21½	7·90	9·50	2·41	5·09	1·70	0·19	6·10	36·44	3·39	44·28	2·26	2*s.* 10*d.*
Preston	20	6·22	8·41	2·70	5·09	0·84	0·25	4·79	43·95	4·62	39·33	2·38	3*s.*
Nottingham	18½	5·63	8·24	2·93	5·09	0·81	0·24	2·51	45·52	5·63	39·66	2·25	2*s.* 6*d.* to 2*s.* 8*d.*
Leeds	18	7·28	10·64	2·92	5·09	0·34	0·07	4·32	40·23	5·02	42·74	1·69	1*s.* 10*d.*
Sheffield	18	6·28	8·78	2·79	5·09	0·24	0·10	2·56	43·05	4·72	43·05	2·05	2*s.* to 2*s.* 4*d.*
Birmingham	17¼	4·76	6·28	2·64	4·29	1·50	0·36	10·10	40·23	4·05	39·00	2·75	2*s.* 3*d.* to 2*s.* 9*d.*
Bristol	17	4·58	7·77	3·39	4·29	1·50	0·27	5·11	44·57	4·77	40·70	2·19	2*s.* 8*d.* to 2*s.* 10*d.*
London—													
Gaslight & Coke Co.	16	4·41	6·58	2·98	4·32	1·50	0·26	5·95	47·99	3·75	37·64	2·43	3*s.* 2*d.*
So. Metropolitan Co.	16	2·92	4·42	3·03	5·16	0·09	0·26	3·19	53·14	4·11	36·55	3·62	2*s.* 10*d.*
Redhill	16	4·40	5·91	2·69	4·58	0·74	0·49	3·37	48·18	3·41	39·41	2·71	4*s.* 6*d.* to 5*s.*
Gloucester	16?	4·95	7·10	2·87	4·58	0·03	0·51	2·73	48·89	4·64	38·25	2·25	—
Newcastle-on-Tyne	16	3·62	5·00	2·76	4·58	0·28	0·23	5·29	50·50	3·37	36·71	3·20	1*s.* 10½*d.*
Brighton	14	3·76	4·60	2·45	4·62	0·03	0·23	2·07	51·62	4·14	38·15	3·04	3*s.* 3*d.* to 5*s.* 3*d.*
Southampton	14	3·09	4·90	3·17	5·20	0·07	0·39	2·53	53·59	3·59	36·74	2·86	3*s.* 2*d.* to 3*s.* 8*d.*
Newcastle-under-Lyme	15	4·53	5·67	2·47	4·58	0·08	0·11	6·22	46·31	3·74	39·01	2·65	3*s.* 6*d.*
Ipswich	14	4·53	5·82	2·57	3·77	0·06	0·12	10·84	43·26	2·46	38·73	2·40	3*s.* 6*d.*
Norwich	14?	3·26	4·85	2·97	3·40	0·27	0·14	3·03	59·79	3·40	36·11	2·89	2*s.* 6*d.* to 2*s.* 8*d.*

---

[1] 'The Composition and Illuminating Power of Coal Gas.' By Percy Frankland, Ph.D. A paper read May 5, 1884, before the London section of the Society of Chemical Industry, 'Journal of Gas Lighting,' July 1, 1884, p. 17.

TABLE II.—DATA CALCULATED FROM P. F. FRANKLAND'S ANALYSIS OF VARIOUS SAMPLES OF GASES.

Town	Weight of 100 cubic feet at 14·7 lbs. pressure per square inch		Volume of 1 lb. weight at 14 lbs. per square inch pressure		Heat evolved by 1 lb. weight in lb. C. heat units	Heat evolved by 1 cubic foot at 14·7 lbs. pressure				Volume at 17° C. and 14·7 lbs. per sq. in. pressure, which evolves heat equivalent to 1,980,000 foot-lbs., or 1 HP for one hour
	At 0° C.	At 17° C.	At 0° C.	At 17° C.		At 0° C.		At 17° C.		
						Lb. C. heat units	Foot-lbs.	Lb. C. heat units	Foot-lbs.	
Edinburgh	4·355	4·100	22·97	24·39	11,015	479·5	666,560	451·6	627,740	3·154
Glasgow	3·926	3·691	25·47	27·09	11,470	450·3	625,960	423·4	588,530	3·3643
St. Andrews . . .	4·182	3·937	23·91	25·40	10,889	455·4	633,030	428·7	595,890	3·322
Liverpool . . .	3·908	3·679	25·60	27·18	10,862	424·3	589,770	399·6	555,490	3·564
Preston	3·533	3·326	29·13	30·07	11,373	390·4	54,268	378·2	525,720	3·766
Nottingham . . .	3·435	3·234	29·11	30·92	11,875	407·9	567,040	384·0	533,830	3·709
Leeds	3·932	3·702	25·43	27·01	10,437	410·4	570,490	386·4	537,110	3·686
Sheffield	3·738	3·519	26·76	28·42	11,400	426·0	592,150	461·1	557,570	3·551
Birmingham . . .	3·793	3·571	26·37	28·00	9,803	371·7	516,730	350·1	486,650	4·069
Bristol	3·485	3·281	28·69	30·48	11,636	406·6	563,750	381·7	530,640	3·713
London—										
Gaslight & Coke Co. .	3·332	3·137	30·01	31·88	11,481	382·5	531,770	360·1	500,580	3·955
South Metropolitan Co.	2·866	2·700	34·89	37·04	12,729	368·8	507,110	343·6	477,680	4·145
Redhill	3·160	2·975	31·65	33·61	12,170	384·5	534,480	362·1	503,320	3·934
Gloucester . . .	3·172	2·986	31·54	33·49	12,379	392·4	545,560	369·6	513,790	3·853
Newcastle-on-Tyne .	3·053	2·874	32·75	34·79	11,941	364·6	506,810	343·2	477,090	4·156
Newcastle-under-Lyme .	3·151	2·966	31·74	33·71	11,971	377·1	524,250	355·1	49,361	4·011
Brighton	2·862	2·694	34·94	37·12	13,018	372·5	517,890	350·7	487,480	4·062
Southampton . . .	2·852	2·431	35·06	41·13	12,983	370·3	514,730	315·6	438,760	4·153
Ipswich	3·500	3·294	28·57	30·36	10,535	369·4	513,530	347·6	483,250	4·097
Norwich	2·880	2·711	34·72	36·89	13,212	380·5	528,940	358·1	497,820	3·977

TABLE III. CALCULATED FROM TABLE I.

Oxygen or air required for complete combustion of 1 *vol. of each of the following gases.*

Town	Oxygen	Air	Vol. of products
	vols.	vols.	
Edinburgh	1·55	7·40	8·25
Glasgow	1·44	6·85	7·65
St. Andrews	1·49	7·08	7·88
Liverpool	1·37	6·52	5·45
Preston	1·28	6·10	6·88
Nottingham	1·30	6·17	6·14
Leeds	1·40	6·67	7·47
Sheffield	1·36	6·49	7·28
Birmingham	1·09	5·19	6·08
Bristol	1·29	6·16	6·95
London—			
Gaslight & Coke Co.	1·20	5·76	6·53
South Metropolitan Co.	1·15	5·47	6·20
Redhill	1·22	5·82	6·58
Gloucester	1·25	5·94	6·69
Newcastle-on-Tyne	1·15	5·49	6·24
Newcastle-under-Lyme	1·20	5·72	6·48
Brighton	1·18	5·62	6·36
Southampton	1·17	5·56	6·29
Ipswich	1·18	5·63	6·31
Norwich	1·18	5·63	6·39

LIST OF BRITISH GAS AND OIL ENGINE PATENTS

FROM THE YEAR 1791 TO 1897 INCLUSIVE.

When patents are communicated, the names of the communicators are printed within parentheses.

1791.

NO.

1833. John Barber.—Using inflammable air for the purpose of producing motion.

1794.

1983. Robert Street.—Method of producing an inflammable vapour force by means of fire, flame, &c.

1797.

2164. James Glazebrook.—Working machinery by means of the properties of air.

1801.

2504. James Glazebrook.—Power from mixtures of air, such as hydrogen, nitrous air, &c.

1817.

4179. J. C. Niepce.—Propelling vessels by explosive gases.

1823.

4874. Samuel Brown.—Effecting a vacuum by flame, and thus producing power.

1826.

5350. Samuel Brown.—Improvements in his former patent, No. 4874.

5402. E. Hazard.—Preparing mixtures of vapours with air, and exploding them to obtain motive power.

1833.

6525. L. W. Wright.—Explosive engine. Carburetted hydrogen and air are forced into reservoir and exploded.

1835.

NO.
6875. J. C. Douglass.—Explosion engine.

1838.

7615. W. Barnett.—Obtaining motive power from inflammable gases by compression and explosion.
7871. Byerley & Collins.—Using of steam or gas, or both combined, with the hydrostatic paradox.

1839.

8207. H. Pinkus.—Motive power obtained either by explosion or exhaustion.

1840.

8644. Henry Pinkus.—Explosion engine.

1841.

8841. James Johnson.—Motive power obtained by the explosion of oxygen and hydrogen.

1843.

9972. Joseph Robinson.—Engine driven by inflammable gas or vapour.

1844.

10404. J. W. B. Reynolds.—Gas or pneumatic locomotive engines; explosion of a mixture of gas and air.

1846.

11072. Samuel Brown.—Improvements in gas engines and in propelling carriages and vessels (no specification enrolled).
11245. W. Cormack.—Motive power is obtained by contraction and rarefaction.

1850.

13302. E. C. Shepard.—Explosion engine.

1852.

940. N. Seward.—Motive power. Gunpowder.
979. W. Quaterman (provisional only).—Motive power by gaseous matter.
14086. Samuel Haseltine.—Improvements in engines to be worked by air or gases (no specification enrolled).
14150. A. V. Newton.—Gas engine.

1853.

362. Robert Roger (provisional only).—Obtaining motive power by explosion.
515. R. L. Bolton.—Motive power is obtained from the explosion of gases.

NO.
1248. E. J. Schollick.—Water is decomposed by electric currents into its component gases, which gases pass into a cylinder, and are exploded by another electric apparatus.
1577. Joseph Webb (provisional only).—Improvements in obtaining and applying motive powers (gas and electricity) by explosion.
1648. Fabian Wrede.—Improvements in gas and air engines.
1671. A. Carosio (provisional only).—Producing explosive gases electro-magnetically.

1854.

191. James Anderson (provisional only).—Motive power obtained by air, gases, or vapour.
549. J. C. Edington (provisional only).—Mixture of carburetted hydrogen and air, exploded in a cylinder.
1072. Barsanti & Matteucci (provisional only).—Apply the explosion of gases as a motive power (atmospheric engine).

1855.

339. T. B. Blanchard.—Motive power from combustion.
562. Alfred V. Newton.—Improvements in engines worked by explosive mixtures.
1011. Henri Balestrino (provisional only).—Improvements in obtaining motive power by aid of explosive gases.

1856.

1807. C. J. B. Torassa.—Improvements in obtaining motive power by aid of explosive gases.

1857.

1655. Barsanti & Matteucci.—Improvements in obtaining motive power from explosive gases.
1754. J. S. Rousselot.—Improved method for obtaining motive power, and engine for applying the same.
2408. J. E. F. Luedeke.—Motive-power engine (explosion).

1858.

969. W. Clark.—Burnt air motor.
996. C. D. Archibald.—Treating air or gases for purposes of motive power.
2648. R. Nelson.—Vacuum obtained by ignited hydrocarbon fluids.

1859.

784. T. M. Meekins.—Production of motive power, and projectile and explosive force (provisional protection refused).
1227. J. Nasmyth.—Improved apparatus for obtaining and applying motive power.

NO.

1345. P. Gambardella.—Obtaining motive power from mixture of hydrogen and oxygen, exploded by electric spark.

2767. J. Anderson.—Coal is partially burned and wholly distilled in a furnace into which the proper quantity of air is introduced.

1860.

335. J. H. Johnson.—Improvements in obtaining motive power.

615. Pierre Hugon.—Gas and air exploded in bent tube over water.

878. Michael Henry.—An explosive mixture ignited by the electric spark.

1585. H. F. Cohade.—A mixture of air and gas is exploded in a chamber furnished with a valve to produce pressure.

2743. W. E. Newton.—Heating apparatus consists of a burner from which hydrogen under pressure escapes and is ignited by an electric spark.

2902. Pierre Hugon.—Improved method for igniting explosive gaseous compounds.

1861.

107. J. H. Johnson.—Improvements upon the reciprocating gas motive power engine, No. 335/1860.

166. Jean B. Pascal.—Application of inflammable gas, produced by decomposition of steam, to explosion engine.

3270. W. E. Newton.—Force generated by the explosion of a mixture of atmospheric air and hydrogen.

1862.

2143. C. W. Siemens (provisional only).—Mixed air and gas are admitted into the working cylinder and ignited by electricity.

3108. Jacques Arbòs.—A gas engine with apparatus for generating gas, forming one apparatus.

1863.

653. Pierre Hugon.—Explosive force of the gaseous mixture acts upon an intermediate column of water, and thus indirectly upon the piston.

1449. W. Clark.—Effecting the combination of oxygen with the fuel, and their intermixture with the burning products of combustion, causing motive power.

2098. R. A. Brooman.—Improvements in air and gas engines.

1864.

1099. M. P. W. Boulton.—In connection with the mode of working steam and caloric engines to employ that portion of heat which is generated by combustion of the fuel.

1173. F. H. Wenham.—Engines worked by explosive mixtures.

NO.
1288. J. E. Holmes (provisional only).—Vacuum by explosion.
1291. M. P. W. Boulton.—Improvements in engines worked by heated air or gases mixed with steam.
1599. B. F. Stevens.—Applying petroleum vapour mixed with air.
1636. M. P. W. Boulton.—Improvements in obtaining motive power from aëriform fluids.
3044. M. P. W. Boulton.—Improvements in heating aëriform fluids by injecting some substance in a state of fusion (chlorides, &c.).

1865.

501. M. P. W. Boulton.—Improvements in obtaining motive power from aëriform fluids and from liquids.
827. M. P. W. Boulton.—Obtaining motive power from aëriform fluids and liquids.
905. John Pinchbeck (provisional only).—The connection of the exhaust pipe of the cylinder with a condensing chamber of engines worked by explosion of air and gas.
986. Pierre Hugon.—Effecting the combustion or explosion of gases by means of slide valves carrying gas burners supplied with gas under pressure.
1915. M. P. W. Boulton.—Improvements in obtaining motive power when heated air or aëriform fluid is employed.
1992. M. P. W. Boulton.—Method for utilising a larger portion of heat.
2600. W. E. Gedge.—Expansion engine.

1866.

27. T. T. Macneil (provisional only).—Motive power is produced by means of a receptacle containing incandescent fuel into which is forced the requisite air for combustion.
181. W. Clark (provisional only).—Motive power, heated gas or air.
434. C. D. Abel.—The explosion of a mixture of air and gas drives up a light piston.
434. C. D. Abel.—Gas engine in which the explosion of air and gas, ignited by a gas jet or electric spark, drives up a piston.
434. C. D. Abel.—Regulating power of explosion.
738. M. P. W. Boulton.—Generating and applying heat for the production of motive power and steam.
3125. R. George.—Improvements where motive power is obtained by action on a piston traversing to and fro within a vibrating cylinder.
3363. J. Anderson.—Improvement on No. 2767/1859, the connection of the piston with shield shell.
3448. W. Clark.—Improvements in manufacture of hydrogen gas and its applications for lighting and heating, and as a motive power.

1867.

NO.

422. R. Shaw (provisional only).—Explosion engine details.

499. Kinder & Kinsey.—Improvements in gas engines.

571. A. V. Newton.—Improvements in gas engines.

633. A. L. Normandy.—Improvements in engines worked by heated air or gases.

1392. William Smyth.—Motive power for actuating apparatus for navigating the air.

1575. H. A. Bonneville.—Obtaining motive power by means of an overheated mixture of air and steam.

2245. C. D. Abel.—Combined gas and air engine. The explosion of a mixture of gas and air propels a light piston.

3237. W. E. Gedge (provisional only).—The burnt gases are condensed after their action upon the driving piston in order to produce a vacuum.

3690. W. E. Newton.—Motors for generating motive power.

1868.

354. A. M. Clark.—Manufacture of gases for a gas engine.

1393. G. B. Babacci.—A vertical gas engine.

1878. J. Bourne.—Production and application of motive power. Air and fuel, either solid, powdered, liquid, or gaseous, are blown, after being made hot, into a hot chamber, a pump or steam jet being used.

1988. M. P. W. Boulton.—Apparatus for obtaining motive power by the combustion of aëriform inflammable fluid.

2264. J. Gill.—Improvements in the construction of engines for motive power.

2680. J. M. Hunter.—A vessel is provided with motive power for aërial propulsion—explosion of mixture.

2808. Bower & Hollinshead.—The construction of engines in which the motive power is derived from the force of the explosion of air and gas.

3146. J. Robertson.—The generation of steam or gases to actuate motive power engines.

3264. E. A. Rippingille.—Motive power obtained by mixing the products of combustion with steam.

3594. John Bourne.—Production of heat, and generation and application of motive power.

1869.

1375. Franklin & Dubois (provisional only).—Gas engine.

1435. H. Bessemer.—Blast furnaces and blast engines, and utilising the gaseous products from blast furnaces.

1748. A. M. Clark (provisional only).—Apparatus for producing motive power by the use of steam or compressed gases.

NO.

3087. Hydes & Bennett.—Propelling ships by means of heated compressed air and products of combustion combined.

3178. A. H. Brandon.—Gas or vapour engine.

3585. W. Hetherington.—Improvements in the arrangement and construction of motive power engines which are actuated by heated air or gases.

3705. J. Bourne.—Production of heat and motive power, the combustion of solid, liquid, or gaseous fuel.

1870.

194. J. M. Plessner.—Treatment of hydrocarbons and air to produce motive power.

440. A. H. de Villeneuve.—Machinery for generating, obtaining, and applying motive power.

1352. E. P. H. Vaughan (provisional only).—Construction of gas engines in which a mixture of air and combustible gas is introduced into a cylinder between two pistons.

1859. John Bourne.—Motive power is produced from heat derived from the combustion of solid, liquid, or gaseous fuel, and from coal reduced to powder.

2554. William Firth (provisional only).—Improvements in steam, air, and gas engines.

2959. E. P. H. Vaughan.—Gas engine, in which the mixture of air and combustible gas is introduced into the cylinder between two pistons.

1871.

1724. E. N. Schmitz.—An improved gas engine.

2254. G. Haseltine.—Motive power produced by the explosive force of gas.

2326. J. Anderson.—Producing current and developing motive power mainly by igniting a mixture of combustible gas and air in a chamber or channel, near an orifice, through which the gases of greatly increased volume, due to the combustion, issue in the form of a jet.

2587. J. M. Plessner.—Obtaining motive power from the explosion of gases.

1872.

387. W. R. Lake.—Engines operated by gunpowder, gun-cotton, or other explosive material.

821. M. A. Soul.—Navigable balloon worked by a gas engine.

1126. T. N. Palmer (provisional only).—An explosive gas engine. Any fluid carburetted hydrogen gas or fluid, in the form of spray, is introduced into a cylinder, where by the access of atmospheric ai its combustion produces motive power.

NO.

1423. P. Jensen.—The construction of coke ovens and utilisation of the waste heat therefrom for generating gas for gas engines and other purposes.

1594. W. E. Newton.—Explosion engine.

2293. J. Young.—Motive power obtained from vapours given off by the volatile hydrocarbons obtained from petroleum and paraffin oils.

3228. W. R. Lake.—The warming of air (for heated air motor) effected by means of tar, or other cheap liquid fuel, placed in a closed cylinder and ignited.

3481. E. T. Hughes (provisional only).—The use of any liquid hydrocarbon, such as naphtha or petroleum, which in a divided state, mixed with atmospheric air, is injected behind a piston in a cylinder, and when ignited, produces power by the explosion or combustion.

3641. G. Haseltine.—Utilising the vapour of hydrocarbon oils or the products thereof, or similar substances, for obtaining motive power.

1873.

272. W. E. Sudlow.—Rotary engines worked by hot air, gas, explosive or otherwise, or by water pressure or steam.

329. G. Rydill.—Steam boilers and furnaces, heating air and gases, and producing motive power from a mixture of steam and products of combustion for working a steam engine, and for other purposes.

1628. J. Imray (provisional only).—Method of and apparatus for obtaining motive power from heated air, gas, or gaseous products of combustion admitted to a cylinder at the pressure of the atmosphere.

1946. J. Imray.—Obtaining motive power from heated air, gas, or gaseous products of combustion admitted to a cylinder at the pressure of the atmosphere and cooled therein, so that their pressure on one side of the piston being reduced below that of the atmosphere, the excess of atmospheric pressure on the other side of the piston shall effect its propulsion.

3848. W. R. Lake.—Gas engines driven by the explosion of combustible gas or vapour mixed with air.

4088. F. W. Turner.—Gas engines, in which a wheel, arranged with a projecting rim having bevelled grooves on the inside, is keyed on the main shaft.

1874.

25. R. Gottheil.—An explosive gas engine, having a cylinder open at one end, and provided with two pistons, one of which may be termed the working piston, and is connected in the usual way to a crank on the main shaft, while the other, which may be called the loose piston, has a rod passing through the cylinder cover, and through the two friction cheeks mounted on levers, so as to admit of free movement

NO.

of the piston rod in one direction, while its movement in the other direction is checked, owing to the cheeks embracing the rod tightly.

414. C. D. Abel.—Gas engine, in which a slide is arranged to operate upon a single passage for inlet to and outlet from the cylinder; this engine is regulated by a governor, so as to economise the expenditure of gas.

486. S. Ford.—A rotary gas engine worked by the explosive force of gas.

493. J. Hock.—Engines worked by the combustion of petroleum, naphtha, or other liquid hydrocarbons, such combustion producing pressure in a cylinder to work a piston connected to a crank on a fly-wheel shaft.

509. R. M. Marchant.—Combined air, steam and caloric engine.

605. C. D. Abel.—Improvements in gas motor engines.

777. J. D. Ridley.—Aërial machine, in which a piston actuates the wings of the apparatus, causing it to reciprocate in a cylinder by alternate explosions of gunpowder, or other explosive agent, fired by electricity.

961. C. Carobbi & G. Bellini.—Locomotive and other engines, worked by air compressed by the combustion of fulminating matters, such as cotton, hemp, linen, tow, or similar substances, formed into a rope, and treated with a mixture of concentrated azotic and sulphuric acid.

1652. E. Butterworth (provisional only).—Preventing the over-heating of a cylinder, exhaust valve, and adjacent pipes.

2209. G. Haseltine.—Improvements in gas engines.

2441. F. Jenkin.—Thermo-dynamic engine, or 'fuel engine,' the primitive type of which is Stirling's air engine.

2795. J. H. Johnson.—Generating and applying the motive power of gases.

3189. R. M. Marchant (provisional only).—Combined air, steam, and caloric engines. Gas used as fuel.

3190. R. M. Marchant (provisional only).—Steam and other motive power engines, and manufacture of gas.

3205. F. W. Crossley.—Improvements in gas motor engines.

3257. C. T. E. Lascelles.—Gas engines for propelling tramway cars and other vehicles.

4410. Kirkwood, Lascelles, & Hall (provisional only).—Gas engines used as motors for tramway cars and other vehicles.

1875.

71. C. D. Abel.—Motor engines worked by gas or combustible vapour and air.

175. P. Vera.—Gas and hot air engines.

265. E. C. Mills and H. Haley.—Explosive gas engines.

744. J. F. Dickson.—Improvements in air and gas engines.

NO.

2016. De V. Bruce & T. M. Antisell.—Utilising the expansive force of vapours or gases, either by gradual pressure or explosion, in engines.

2334. W. W. Smyth & G. G. Hunt.—Gas engine with two single-acting cylinders.

2826. R. Hallewell.—Explosive gas engines.

3221. F. W. & W. J. Crossley.—Improvements in gas motor engine.

3274. Q. L. Brin.—Obtaining motive power by the explosion of gas and air acting directly or indirectly on water or oil.

3615. C. D. Abel.—Improvements in gas and air engines.

4326. J. H. T. Ellerbeck & J. M. Syers.—Explosive gas motor (provisional only).

4342. E. P. Alexander.—Gas motive power engines, and means of regulating and transmitting their motion for driving, sewing, electric, and other machines, and fans or pumps.

1876.

88. Thacker (provisional only).—Improvements in gas engines.

132. Crossley.—Improvements in gas motor engines.

1034. Kidd (provisional only).—Improvements in gas-producing furnaces and in the methods of utilising the gases generated therefrom.

1520. Wirth (Humboldt Manufacturing Co.).—Improvements in gas engines.

1961. Lascelles.—Improvements in gas and other explosive motive power engines.

2081. Abel (Otto).—Improvements in gas motor engines.

2288. Boulton.—Improvements in apparatus whereby combustion under pressure is applied to generate fluid for working engines.

2824. Linford.—Improvements in gas engines and in appliances connected thereto.

3191. De Kierzkowski.—Improvements in pressure generators for motive engines, and in the application of motive engines to the propulsion of tram cars, &c.

3370. Redfern (Sack & Reunert).—Improvements in gas motor engines and in apparatus connected therewith.

3435. Simon (provisional only).—Improvements in the construction of engines to be worked by power derived from air and oil combined.

3444. Johnson (Wertheim).—Improvements in obtaining and applying motive power, and in the apparatus employed therein.

3620. Boulton.—Improvements in engines worked by the combustion and expansive force of an inflammable fluid mixture.

3767. Boulton.—Improvements in apparatus for the production of motive power jointly by the elastic force of products of combustion, and of steam or vapour.

NO.

4987. Hallewell.—Improvements in gas motor engines.

4988. Hallewell.—Improvements in gas and water motor engines.

1877.

252. Clerk.—Improvements in motive power engines working with hydrocarbon gas or vapour.

491. Otto & Crossley.—Improvements in gas motor engines.

711. Roberts (provisional only).—Improved machinery or apparatus for propelling tramway cars and other like vehicles.

766. Boulton.—Improvements in engines worked by products of combustion either alone or in conjunction with other elastic fluid.

819. Hallewell.—Improvements in gas motor engines and in the valve of such engines.

1063. Lake (Wertheim).—Improvements in gas motor engines.

1470. Linford.—Improvements connected with gas engines.

2177. Crossley (F. W. & W. J.).—Improvements in gas motor engines.

2334. Robson.—Improvements in engines operated by the combustion of gas or vapour.

2621. Simon & Müller (provisional only).—Improvements in gas engines.

2749. Simon.—Improvements connected with atmospheric gas engines.

3024. Mills & Haley.—Improvements in motive power engines worked by the explosion of gas.

3121. Wilson and others (provisional only).—Improvements in engines, and apparatus for the propulsion of vehicles on roads and rails.

3122. Wilson and others (provisional only).—Improvements in gas motors.

3159. Johnson (La Société des Moteurs Lambrigot).—Improvements in effecting the conversion of hydrocarbons, &c., into gas, and in apparatus or means employed therein, and in or for the production and application of gaseous mixtures.

4052. Weyhe.—Improvements in gas motor engines.

4937. Simon (Kindermann) (provisional only).—Improvements in gas motor engines.

1878.

10. Hilton & J. & S. Johnson (provisional only).—Improvements in the application of gas motors to tram cars and other self-propelling vehicles.

228. Ramsbottom.—Improvements in engines for obtaining motive power from liquid and gaseous fluids, and for pumping and compressing.

290. Pieper (Schaeffer) (provisional only).—An improved gas motor.

433. Simon (L. & R.).—Improvements in and connected with gas engines.

942. Linford.—Improvements in gas engines.

1170. Baron.—Improvements in motive power engines.

1770. Abel (Otto) (provisional only).—Improvements in apparatus for igniting the charges of gas motor engines.

NO.

1798. Hallewell.—Improvements in gas engines, applicable in part to other uses.

1997. Hannoversche Maschinenbau-Actien-Gesellschaft, The.—Improvements in gas engines with two pistons.

2037. Clayton.—Improvements in gas motor engines and in apparatus connected therewith.

2278. Boulton (provisional only).—Improvements in gas motor engines.

2474. Johnson (François).—Improvements in obtaining motive power and in the machinery or apparatus employed therein.

2525. Boulton (provisional only).—Improvements in gas motor engines.

2609. Boulton (provisional only).—Improvements in gas motor engines.

2707. Boulton.—Improvements in combined gas and steam motor engines.

2901. Waller.—Improvements in gas, steam, air, and other motive power engines and in apparatus in connection therewith.

3045. Clerk.—Improvements in gas motor engines.

3056. Leichsenring.—Improvements in and relating to engines worked by gas or other fluid, partly applicable to apparatus for compressing fluids.

3444. Cropper & Johnson.—Improvements in valves for gas engines.

3774. Casson (provisional only).—Improved means and apparatus for working clocks and bells (by combustion of gas).

3972. Weatherhogg.—Improvements in gas motor engines.

4630. Foulis (provisional only).—Improvements in motive power engines.

4760. Duncan & W. G. Wilson (provisional only).—Improvements in gas motors.

4782. Lake (Lay) (provisional only).—Improvements in apparatus for propelling, guiding, &c., torpedo boats.

4843. Foulis.—Improvements in gas and hydrocarbon engines, and in igniting the gas or hydrocarbon, applicable for other purposes.

4979. Simon and another.—Improvements in and connected with gas or hydrocarbon engines.

4987. Lake (Lay).—Improvements in apparatus for propelling, guiding &c. torpedo boats.

5092. Hallewell.—Improvements in gas motor engines.

5113. Crossley and another.—Improvements in gas motor engines.

1879.

2. Williams & Baron.—Improvements in and relating to atmospheric air and gas motor engines.

309. Pieper (Krauss).—A gas power locomotive for tramways and for railways of secondary order.

392. Shaw (provisional only).—Improvements in gas motor engines.

495. Boulton.—Improvements in caloric engines.

NO.

540. Donald (provisional only).—Improvements in and connected with gas engines.

750. Simon (Todt) (provisional only).—Improvements in vapour or gas motor engines.

1161. Graddon.—Improvements in machinery or apparatus for generating motive power &c. &c.

1270. Turner.—Improvements in and relating to gas motor engines.

1450. Hallewell.— Improvements in compound gas engines.

1500. Linford.—Improvements in gas engines.

1727. Purssell (provisional only).—Improvements in gas engines to adapt them for locomotive purposes.

1912. Holt & Crossley (provisional only).—Improvements in machinery for starting, propelling, and stopping vehicles, and in the apparatus and appliances connected therewith, more particularly with reference to gas engines &c. &c.

1933. Sombart (Buss).—Improvements in gas engines.

1947. Newton & Cowper (provisional only).—Improvements in prime movers and apparatus actuated by fluid pressure, applicable wholly or in part to pumps and other apparatus.

1996. Clark (Fell).—Improvements in the production of motive power and in apparatus for the same.

2073. Foulis.—Improvements in that class of motive power engines known as gas or hydrocarbon engines.

2152. Woolfe.—Improvements in the construction of gas motor engines.

2191. Benson (Rider).—Improvements in gas engines.

2193. Hurd.—A condensing or non-condensing compound single or double acting motive power engine, worked by explosive gases, collected from mines or otherwise, in combination with or without gun-cotton, or with gun-cotton alone, &c.

2424. Clerk.—Improvements in gas motor engines.

2618. Butcher (provisional only).—Improvements in gas motor engines.

2732. Johnson (provisional only).—Improvements in gas engines.

3140. Clayton.—Improvements in motor engines worked by gas or combustible vapour and air.

3213. Atkinson.—Improvements in gas and similar engines and mechanism connected therewith, partly applicable to other purposes.

3233. Simon.—Improvements in gas engines worked by the combustion or explosion of a compressed mixture of gas and air or hydrocarbon and air.

3245. Abel (Daimler).—Improvements in gas motor engines.

3467. Dalton & Kenworthy.—Improvements in propelling carriages and in the apparatus employed therein.

3561. Picking & Hopkins.—Improvements in gas motor engines.

3732. Glaser (Wittig & Hees).—Improvements in gas and petroleum engines.

NO.

3905. Alexander (Angele) (provisional only).—Improvements in gas motors.

4101. Emmet & Cousins.—Improvements in gas engines.

4337. King.—Improvements in and connected with engines actuated by the explosion or combustion of a mixture of gas and air.

4340. Williams.—Improvements in and relating to atmospheric air and gas motor engines.

4377. Butcher.—Improvements in gas motor engines.

4396. Purssell.—An improved arrangement of apparatus for moving tram cars &c. by gas engine power.

4483. Graddon (provisional only).—An improved motive power engine actuated by an explosive fluid or gas, part of which may be applied to other gas engines.

4485. Wigham (provisional only).—Improvements in gas motor engines.

4492. Shaw (provisional only).—Improvements in gas motor engines.

4499. Holt & Crossley.—Improvements in machinery &c. for stopping &c. the direction of motion of vehicles on rails, &c., more particularly applicable to gas engines, but also suitable for other motor engines.

4501. Robson.—Improvements in gas engines.

4755. Foulis.—Improvements in gas engines.

4820. Edmonds (François).—A new or improved gas motor or engine and new arrangements of mechanism employed with the same.

5052. Mills & Haley.—Improvements in gas motor engines.

1880.

9. Pottle.—Improvements in governors for steam engines and other motors.

117. Robinson.—Improvements in gas motor engines.

330. Linford.—Improvements in and connected with gas engines.

343. Abel (Daimler).—Improvements in gas motor engines.

473. Newton.—Improvements in crossheads for motive power engines.

474. Butcher.—Improvements in tramway, locomotive, and other engines, and in apparatus connected therewith.

533. Thompson (Geisenberger).—Improvements in and appertaining to gas engines, or engines actuated by the explosion or combustion of mixed gas or vapour and air.

760. Edwards.—Improvements in motive power engines actuated by the combustion of a mixture of gas and air, or by the pressure of steam or other elastic fluid, parts of which invention are also applicable to other purposes.

1131. Johnson (provisional only).—Improvements in gas engines.

1653. Beechey (provisional only).—Improvements in engines worked by gas and air or other hydrocarbons.

1692. Williams & Malam.—Improvements in and relating to atmospheric air and gas motor engines.

NO.
1736. Sombart (provisional only).—Improvements in gas engines.
1969. Haigh & Nuttall.—Improvements in gas engines.
2181. Wordsworth (provisional only).—Improvements in gas motor engines.
2182. Lake (Lay).—Improvements in apparatus for facilitating the control and operation of torpedo boats.
2290. Hardaker.—Improvements in road vehicles or velocipedes.
2299. Livesey (Livesey).—Improvements in gas motor engines.
2344. Robinson.—Improvements in gas motor engines.
2422. Foulis.—Improvements in gas engines.
3140. Lake (Breittmayer).—Improvements in gas engines.
3176. Northcott.—Improvements in engines and apparatus for producing motive power (relating to gaseous fuel engines).
3182. Turner.—Improvement in gas motor engines.
3411. Holt & Crossley.—Improvement in locomotives for tramways and light railways.
3512. Aylesbury.—Improvements in gas engines or motors.
3607. Jenner.—Improvements in gas engines.
3652. Wilson.—Improvements in vertical steam and other motive power engines.
3685. Williams & Malam.—Improvements in and relating to atmospheric air and gas motor engines.
3869. Purssell.—Improvements in the construction, arrangement, and method of action of gas engines.
3913. Lawson (provisional only).—Improvements in velocipedes and in the application of motive power thereto, applicable to other, &c.
4050. Robson.—Improvements in obtaining and applying motive power.
4075. Clayton.—Improvements in motor engines worked by gas or combustible vapour and air.
4159. Kesseler (Henniges) (provisional only).—Improvements in the Simon's steam gas motor with burning flame in the cylinder.
4201. Jensen (provisional only).—Improvements in burners for producing and burning petroleum gas.
4260. Robinson.—Improvements in gas motor engines.
4270. Beechey.—Improvements in gas motor engines.
4297. Crossley.—Improvements in gas motor engines.
4398. Rhodes and others.—Improvements in gas motor engines.
4419. Benson (Rider).—Improvements in gas engines.
4547. MacFarlane (provisional only).—A new or improved gas engine.
4633. Bickerton (provisional only).—Improvements in gas motor engines.
4819. Muller.—Improvements in or additions to gas engines.
4881. Simon & Wertenbruch.—Improvements in gas motor engines.
5024. Horne (provisional only).—Improvements in gas engines.
5090. Foulis (provisional only).—Improvements in gas engines.
5101. Richardson (provisional only).—Improvements in gas engines and in apparatus connected therewith for the supply of gas to them.

NO.

5130. Livesey (Livesey).—Improvements in compound gas motor engines.

5219. Fiddes.—Improvements in gas motor engines.

5269. Wigham (provisional only).—Improvements in locomotive engines for tramways, &c.

5347. Robinson.—Improvements in engines to be worked by steam, air, or gas.

5471. Hutchinson.—Improvements in gas motor engines.

5479. Graddon.—Improvements in machinery or apparatus for obtaining and applying motive power, partly applicable to other purposes.

1881.

60. Abel (Otto).—Improvements in gas motor engines.

125. Haddan (Nix & Helbig) (provisional only).—Improvements in gas engines.

180. Foulis.—Improvements in gas engines.

320. Sombart.—Improvements in gas engines.

370. Holt & Crossley.—Improvements in connection with gas motor engines, and locomotives worked thereby.

532. Fielding.—Improvements in gas motor engines.

565. Allcock.—Improvements in gas engines.

798. Ord (provisional only).—Improvements in gas engines.

799. Graddon (provisional only).—An improved construction of gas engines.

811. Haigh & Nuttall.—Improvements in the construction of gas engines.

867. Wenham.—Improvements in combined gas and heated air engines.

1074. Bauer & Lamart.—Improvements in gas engines.

1089. Clerk.—Improvements in motors worked by combustible gas or vapour.

1202. Boulton (provisional only).—Improvements in caloric engines wherein the working fluid is heated by internal combustion of gas.

1363. Bickerton.—Improvements in gas motor engines.

1382. Groth (Schoufeldt and another) (provisional only).—A new or improved reversible rotary engine.

1388. Ewins & Newman.—Certain improvements in gas engines.

1389. Boulton.—Improvements in caloric engines wherein the working fluid is heated by internal combustion of gas.

1409. Gwynne & Ellis.—Improvements in gas motor engines.

1541. Benier (provisional only).—Improvements in gas engines.

1723. Watson.—An improved method of exploding gases used in gas engines.

1763. Watson (provisional only).—Improvements in gas engines.

1765. Edwards.—Improvements in motive power engines actuated by the combustion of a mixture of gas and air.

2083. Robson.—Improvements in motive power engines.

2122. Dougill.—Improvements in gas motor engines, in the method of regulating the speed thereof, and of admitting combustible material into the cylinder and allowing the escape of exhausted products, &c.

NO.
2227. Crossley.—Improvements in the method and apparatus for supplying gas to movable gas motor engines.
2280. Ford.—Improvements in gas engines.
2504. Siemens.—Improvements in gas motors and producers.
2564. Wigham.—Improvements in locomotive engines for tramways, railways, &c.
2645. Pinkney.—Improvements in gas engines.
2670. Mills.—Improvements in obtaining motive power.
2765. Levassor.—An improved motive power engine.
2919. Watson.—An improved means or method of exploding gases in gas engines.
2931. De Pass (Kortung).—Improvements in gas engines.
2961. Beechey.—Improvements in gas motor engines.
2967. Wastfield (provisional only).—Improvements in gas engines.
2990. Linford & Linford.—Improvements in and connected with gas engines.
3113. Eteve & Lallement.—A new or improved motive power engine operated by hydrocarburetted air.
3275. Ord.—Improvements in gas motor engines.
3330. Brydges (Schiltz).—Improvements in gas, hydrocarbon, and other motive power engines.
3367. Boulton.—Improvements in engines wherein a piston is propelled in a cylinder by ignition of inflammable gas or fluid.
3415. Justice (Osam).—Improvements in the utilisation of the gaseous products of combustion, and in apparatus therefor (provisional only).
3450. Crossley & Holt (provisional only).—An improved governor for gas motor engines.
3527. Lucas.—Improvements in gas engines.
3536. Stern, Clerk, & Handyside.—Improvements in refrigerating machines, and in part applicable to gas motors, &c.
3561. Kirkhove & Snyers.—A new or improved method and machinery for direct propulsion of land, water, and aërial motors or engines, applicable also to stationary engines.
3715. Williams.—Improvements in gas engines and the automatic generation of gas therefor.
3786. Butcher.—Improvements in gas motor engines, and in arrangements for starting and re-starting the same.
4086. Atkinson.—Improvements in gas engines.
4137. Watson.—Improvements in obtaining motive power by means of combustible gas or vapour, and in apparatus therefor.
4223. King.—Improvements in gas motor engines.
4244. Abel (Spiel).—Improvement in motor engines worked by combustible gases or vapours and steam.
4288. Simon & Wertenbruch.—Improvements in the construction and method of action in gas engines.
4340. Wordsworth and others.—Improvements in gas motor engines.

NO.

4402. Weatherhogg.—Improvements in single and double acting compound air and gas motor engines.

4407. Drake & Muirhead (provisional only).—Improvements in and connected with gas engines.

4493. Royle.—Improvements in and apparatus for lubricating steam and gas engines, and for other lubricating purposes, &c.

4589. Bénier & Lamart (provisional only).—Improvements in gas engines.

4608. Watson.—Improvements in gas engines.

4830. Lake (Lay).—Improvements in and relating to boats to be propelled by gas, &c.

5178. Shaw.—Improvements in gas motor engines.

5201. Tonkin.—Improvements in motive power engines actuated by the combustion or explosion of mixtures of gas or combustible vapour with air, &c. ; applicable to other purposes.

5259. Rhodes (provisional only).—Improvements in and appertaining to gas engines or engines actuated by the explosion or combustion of mixed gas or vapour and air.

5350. Siemens.—Improvements in engines worked by the combustion of gaseous fuel.

5456. Williams.—Improvements in and relating to atmospheric air and gas motor engines.

5469. Crossley & Holt.—Improvements in gas motor engines, part of which improvements are applicable to steam engines, &c.

5483. Griffin.—Improvements in gas motor engines.

5534. Beck (Montelar).—A gas locomotor for the locomotion of carriages, &c. (provisional only).

5575. Quick and another.—Improvements in tramway locomotives and other locomotives or motive power engines.

1882.

362. Turner.—Improvements in gas engines.

397. Emmet.—Improvements in gas engines.

417. Withers.—Improvements in gas engines.

579. Johnson (Bisschop).—Improvements in gas engines.

614. Haigh & Nuttall.—Improvements in the construction of gas engines.

659. Wastfield (provisional only).—Improvements in gas engines.

678. Watson (provisional only).—Improvements in gas engines.

703. Wordsworth & Lindley.—Improvements in gas engines.

994. Fielding.—Improvements in and connected with gas motor engines.

1026. Niel.—Improvements in gas engines.

1318. Beechey.—Improvements in gas motor engines.

1360. Sumner.—Improvements in gas motor engines.

1590. Skene.—Improvements in gas motor engines.

1717. Drake & Muirhead.—Improvements in and connected with gas engines.

NO.
1754. Anderson & Crossley.—Improvements in the ignition apparatus of gas motor engines.
1868. Dufrene, Benier, & Lamart.—Improvements in gas engines.
1874. Brown.—Improved means of, and apparatus for, the production of gas by the combustion of carbon compounds, &c.
1910. Skinner (provisional only).—Improvements in engines which are driven by means of the explosive force of gases.
2008. Glaser (Teichmann) (provisional only).—Improvements in caloric and gas power engines.
2057. Sombart.—Improvements in gas engines.
2058. Porteous.—Improvements in gas engines.
2126. Worssam.—Improvements in gas motor engines.
2202. Clayton.—Improvements in motor engines worked by gas or combustible vapour and air.
2231. Russ (provisional only).—Improvements in the manufacture of gas for lighting, heating, &c., and for utilising the same for motive power.
2257. Nobbs.—Improvements in gas engines.
2329. Hutchinson.—Improvements in gas engines.
2337. Guthrie (provisional only).—Improvements in and relating to engines and apparatus connected therewith for developing the expansive force of air or gas and utilising the same for motive power.
2342. Watson (provisional only).—Improvements in gas engines.
2345. Bickerton and another.—Improvements in and applicable to gas motor engines.
2423. Thompson (Marcus).—Improvements in or appertaining to motors actuated by the explosion of comminuted liquids, &c.
2527. Davey.—Improvements in apparatus for the production of inflammable gas and applying its combustion for the production of motive power.
2751. Braham & Seaton (provisional only).—Improvements in gas engines.
2753. Wordsworth & Wolstenholme.—Improvements in gas motor engines.
3375. Robinson.—Improvements in and apparatus for obtaining motive power for propelling vessels, pumping fluids, and other analogous purposes.
3435. Abel (Beissel).—Improvements in gas motor engines.
3449. Holt & Crossley (provisional only).—Improvements in gas motor engines.
3540. Hargreaves.—Improvements in thermo-dynamic engines.
3787. Davey.—Improvements in apparatus for generating elastic fluid under pressure; available for working engines.
3819. McGillivray.—Improvements in gas engines.
4363. Clark (Schweizer).—Improvements in gas engines.
4378. Atkinson.—Improvements in gas engines.
4388. Atkinson.—Improvements in gas engines.
4418. Watts & Smith.—Improvements in and connected with motors worked by combustible gas, vapour, steam, &c.
4489. Crossley.—Improvements in gas motor engines.

NO.

4755. Wastfield.—Improvements in and relating to gas engines.

4773. Wastfield (provisional only).—Improvements in and relating to gas engines.

4886. Baldwin (provisional only).—Improvements in gas engines and in apparatus connected therewith.

4948. Clerk.—Improvements in motive power engines worked by combustible gas or vapour.

5042. Gedge (Marti & Quaglio).—Improvements in rotary gas engines.

5188. Ashbury and others.—Improvements in gas motor engines.

5371. Russ (provisional only).—Improved arrangement of machinery for the manufacture of gas for lighting, heating, and motive power purposes.

5506. Mewburn (Goubet).—An improved rotary gas or explosion engine.

5510. Maynes.—Improvements in gas motor engines.

5527. Dyson (provisional only).—Improvements in or applicable to gas engines employed in connection with tramcars, &c.

5782. Watson.—Improvements in gas engines.

5819. Whittaker.—Improvements in or applicable to gas motor engines.

5825. Odling (provisional only).—Improvements in gas motor engines.

5865. Butcher (provisional only).—Improvement in gas motor engines.

6130. Clark (Laurent).—Improvements in gas engines.

6136. Bennet & Walker.—Improvements in motive power engines, which improvements are also applicable to gas engines.

6214. Watson.—Improvements in gas engines.

1883.

19. Forest.—An improved construction of gas motor engine.

21. Woodhead.—Improvements in gas motor engines.

130. Odling.—Improvements in gas motor engines.

132. Lake (Maxim) (provisional only).—Improvements in gas engines.

300. Williams.—An improvement in engines for motive power, compression, and other like purposes.

326. Linford & Cooke.—Improvements in gas engines.

388. Howard & Bousfield (provisional only).—Improvements in gas engines.

499. Weatherhogg.—Improvements in air and gas motors and apparatus for the production of gas therefor.

638. King & Cliff.—Improvements in gas motor engines.

781. Townsend & Davies.—Improvements in gas motor engines.

836. Imray (Schweizer).—An improvement in gas motor engines.

911. Capell.—Improvements in motors worked by air, gas, &c., or explosive mixtures, &c.

999. Clark (Kabath).—Improvements in gas and other engines.

1010. Andrew.—Improvements in gas engines.

1019. Handford (Edison).—Improvements relating to the operation of electrical generators by gas engines.

NO.

1060. Martini.—A new gas motor.

1098. Wastfield.—Improvements in and applicable to gas engines.

1116. Steel & Whitehead.—Improvements in gas engines.

1501. Marchant & Wrigley.—Improvements in the application and storage of illuminating or other like gas to motors for driving tramcars or other vehicles, and for the purpose of starting and working gas engines, and in means employed.

1677. Abel (Otto).—Improvements in gas motor engines.

1722. Crossley (provisional only).—An improvement in gas motor engine slide apparatus.

1835. Butcher.—Improvements in gas motor engines and in applying them to pumping purposes.

2192. Justice (Hale).—Improvements in and connected with gas engine, and in the method and means for regulating explosive charge.

2492. Picking & Hopkins.—Improvements in gas motor engines.

2517. Haigh & Nuttall.—Improvements in gas engines.

2561. Nash.—Improvements in the means for operating gas engines.

2702. Pieper (Korting & Lieckfeld).—Improvements in gas motors.

2706. Crowe and others.—Improvements in gas caloric motive engines.

2790. Thompson (Marcus).—Improvements in gas motor engines.

2927. Whitehead.—A new or improved gas motor engine.

3041. Russom (provisional only).—Improvements in gas engines.

3066. Andrew.—Improvements in gas motor engines.

3069. Williams.—Improved means of, and apparatus for, converting reciprocatory into rotary motion in gas and other explosive engines, and in hydraulic, steam, air, or other fluid motors; also for effecting and governing explosions in gas and other such engines, parts of which are also applicable as air and other fluid compressors.

3070. Fielding.—Improvements in gas motor engines, in part applicable to other engines.

3079. Crossley.—Improvements in gas motor engines.

3097. Dougill.—Improvements in gas motor engines.

3135. Niel.—Improvements in the construction and arrangement of gas engines.

3272. Kirchenpauer & Philippi.—Improvements in gas motor engines.

3280. Foulis.—Improvements in gas engines.

3336. Holder.—Improvements in gas motors.

3383. Lake (Gardie).—Improvements in and relating to gas engines.

3568. Wordsworth & Lindley.—Improvements in gas motor engines.

3703. Pickering.—Improvements in gas engines.

4008. Dutton (Spiel).—Improvements in gas or inflammable liquid engines or prime movers.

4023. Quack (provisional only).—Improvements in gas engines.

4046. Clerk.—Improvements in gas motors.

NO.
4080. Griffin.—Improvements in the arrangement and construction of gas motor engines.
4193. Racholz (provisional only).—Improvements in oil-gas engines, whereby the said engine produces its own gas from oil waste.
4242. Ladd (Serrell).—Improvements in and relating to gas engines.
4260. Clark (Economic Motor Company).—Improvements in gas engines.
4291. Andrew.—Improvements in gas engines.
4455. Haddan (Schiltz).—Improvements in gas and petroleum engines.
4816. Williamson and others.—Improvements in gas motor engines.
5020. Briscall and another (provisional only).—Improvements in and relating to gas motor engines.
5042. Lake (Kabath).—Improvements in electrical igniting apparatus for gas engines.
5085. Bullock.—Improvements in gas motor engines.
5113. Bull.—Improvements in gas engines.
5265. Justice (Hale).—Improvements in and connected with gas engines, and in the means and method of supplying explosive charges thereto.
5297. Wirth (Sohnlein) (provisional only).—Improvements in petroleum motors.
5315. Johnson (Lenoir).—Improvements in gas engines.
5331. Robson (provisional only).—Improvements in gas engines.
5406. Picking & Hopkins.—Improvements in gas motor engines.
5543. Nash.—Improvements in the construction of gas engines, and in certain methods of operating the same.
5570. Williamson and others (provisional only).—Improvements in gas motor engines.
5632. Nash.—Improvements in the construction of gas engines.
5633. Nash.—Improvements in the construction of gas engines.
5721. Mills.—Improvements in gas motor engines.
5784. Groth (Daimler).—Improvements in gas or oil motors.
5923. Sombart.—Improvements in gas engines.
5928. Welch & Rapier.—Improvements in gas engines.
5951. Campbell (provisional only).—Improvements in gas motor engine.
5956. Wastfield.—Improvements in and relating to gas engines.
5976. Tonkin.—Improvements in motive power engines actuated by the combustion or explosion of mixtures of gas or combustible vapours with air, parts of which improvements are applicable to other engines.

1884.

325. Hargreaves.—Increasing efficiency of thermodynamic engines.
454. Skene.—Improvements in gas engines.
560. Steel & Whitehead.—Improvements in gas engines.
1373. Sterne.—Exhaust silencer.

NO.
1457. Wirth (Bernstein).—Improvements in apparatus for, and the method of, producing motive power by the explosion of coal or carbon dust and air.
2088. Rodgerson.—Improvements in gas motor engines.
2135. Henderson (Eteve & Braam).—An improved petroleum or hydrocarbon engine.
2289. Rockhill.—Improvements in or relating to brakes for gas or other engines.
2715. Woodhead.—Improvements in gas motor engines.
2854. Clayton.—Improvements in gas motor engines.
2933. Fielding.—Improvements in gas motor engines.
3039. Atkinson.—Improvements in gas engines.
3495. Cobham & Gillespie.—Improvements in gas engines.
3537. Holt & Crossley.—An improved apparatus for starting gas motor engines.
3758. Griffin.—Improvements in piston-rod stuffing-boxes for gas motor engines.
3893. Holt.—Compressing pumps for gas motor engines.
3986. Johnson (Deboutteville & Malandin).—Improvements in gas engines.
4391. Williamson & others.—Improvements in gas motor engines.
4591. Munden.—Improvements in gas motor engines.
4639. Pollock.—Improvements in valves for gas engines.
4736. Wirth (Söhnlein).—Improvements in gas engines.
4776. Spence.—Improvements in gas engines.
4777. Crossley.—Gas motor engines.
4880. Weatherhogg.—Improvements in gas motor engines.
5007. Hill & Hill.—Improvements in engines worked by gas or vapour.
5302. Johns & Johns.—Improvements in rotary gas engines.
5303. Johns & Johns.—Improvements in rotary gas engines and other rotary motors.
5412. Dewhurst.—Improvements in and connected with gas engines.
5435. Park.—Improvements in rotary engines and pumps.
5641. Butcher.—Improved igniting valve for gas engines.
5797. Linford & Piercy.—Improvements in gas engines.
6597. Shann.—Improvements in the machinery for obtaining rotary motion by the action of two forces on different cranks.
6652. Johnson.—Improvements in apparatus for carburetting air.
6662. Wiegand.—Improvements in gas engines.
6784. McNeill.—Improvements in tramway locomotives driven by gas.
7284. King.—Improvements in gas motor engines.
7288. King.—Improvements in gas motor engines.
8211. Holt.—Compound gas motor engine.
8232. Sombart.—Improvements in gas engines.
8489. Green.—Improvements in gas motor engines, and in the means or method of supplying them with gas.

NO.
8565. Rogers.—Improvements in gas engines.
8579. Shaw.—Improvements in gas motor engines.
8637. Crossley.—Improvements in Otto and other gas engines.
8960. Ainsworth.—Improvements in gas engine cylinders.
9001. Guthrie.—Improvements in gas engines.
9112. Groth (Daimler).—Improvements in gas or oil motors.
9167. Williamson and others.—Improvements in or relating to valves for gas motor engines.
9544. Magee.—Improvements in gas engines.
9645. Welch & Rapier.—Improvements in gas engines.
9949. Capitaine (Benz & Co.).—Improvements in gas motors.
10062. Norrington.—Improvements in means for assisting velocipedes and gas engines to start.
10364. Wallace.—Improved apparatus for converting reciprocating rectilinear motion into rotary motion.
10483. Guthrie.—Improvements in caloric engines.
11086. Butterworth.—Improvements in motors worked by combustible gas or vapour.
11361. Justice (Backeljau).—Improvements in and connected with automatic gas motors.
11576. Griffin.—Improvements in apparatus for lubricating gas and other motor engines and machines.
11578. Crossley.—Improvements in gas motor engines.
11750. Douglas.—Improvements in gas engines.
11837. Clark (Hopkins).—Improvements in gas engines.
12201. Griffith.—Improvements in and connected with gas engines.
12264. Davy.—Improvements in gas engines.
12312. Brine.—Improvements in gas engines.
12318. Dougill.—Improvements in gas motor engines.
12431. Purnell.—An improvement in gas motor engines.
12603. Hill & Hill.—Improvements in engines worked by gas or vapour.
12640. Tellier.—Motive power by gas, steam, combustible fluids, &c.
12714. Reddie (Murray).—Improvements in gas engines.
12776. Wilson.—Improvements in the construction of tramway engines driven by gas.
13221. Andrew.—Improvements in gas motor engines.
13283. Redfern (McDonough).—Improvements in gas engines.
13573. Fairfax.—Improvements in rotary and reciprocating engines.
13776. Parker.—Improvements in gas motor engines.
13935. Lawson.—Improvements in gas engines for pumping water and for other uses.
14311. Griffin.—Improvements in gas motor engines.
14341. Browett.—Improvements in gas motor engines.

NO.

14512. Prentice & Prentice.—Apparatus for igniting gas engine charges at starting.

14765. McGillivray.—Improvements in gas engines.

15248. Johnson (Deboutteville & Malandin).—Improvements in carburetters.

15311. Holt & Crossley.—Compound gas motor engine.

15312. Holt.—Gas motor engine.

15633. Newton.—Improvements in gas motor engines.

16131. Benier.—Improvements in hot air engines.

16404. Atkinson.—Improvements in gas engines.

16634. Muller and others.—Improvements in gas engines.

16698. Turner.—Improvements in gas motor engines.

16890. Regan.—Improvements in or connected with electric igniting apparatus for gas engines.

16947. Imray (Barnes & Danks).—Gas motor for tramcar.

1885.

610. Johnson (Lenoir).—Improvements in or connected with gas engines.

848. Myers.—Improvements in gas motor engines.

1218. Pinkney.—Improvements in governors for gas engines, steam engines, and compressed-air engines.

1363. Simon.—An improved construction and arrangement of gas engine.

1424. Asher & Buttress.—A new or improved method of obtaining motive power by the explosive combination of substances.

1478. Williamson, King & Ireland.—Improvements in ignition apparatus for gas motors.

1581. Kempster, jun.—An improved motor driven by the explosion of hydrocarbon vapour.

1700. King.—Improvements in gas motor engines.

1703. Wright & Charlton.—Improvements in heat motors, such improvements relating to petroleum and other hydrocarbon explosive engines.

2712. Atkinson.—Improvements in gas engines.

3199. Beechey.—Improvements in gas motor engines.

3414. Spiel.—Improvements in petroleum and gas engines.

3471. Pope.—Improvements in gas engines.

3747. Holt.—Regulator for supply of gas to motor engines.

3785. Atkinson.—Improvements in gas engines.

3971. Mackenzie.—Improvements in gas engines.

4315. Daimler.—Improvements in motor engines worked by combustible gases, or petroleum vapour, or spray.

4684. Garrett.—Improvements in motors worked by combustible gas or vapour.

5519. Bickerton.—Improvements in gas regulators for supplying gas to gas motors.

NO.

5561. Andrew.—Improvements in gas motor engines.

5971. Mills.—Improvements in gas motor engines.

6047. Rigg.—Improvements in engines worked by elastic or non-elastic fluids, or by the explosion of mixed gases; applicable also to apparatus for pumping.

6565. Weatherhogg.—Improvements in gas motor engines.

6763. McGhee & Magee.—Improvements in gas motor engines.

6880. Macgeorge.—Improvements in and relating to gas engines.

6990. Campbell.—Improvements in gas engines.

7104. Warsop & Hill.—An improved apparatus for igniting the gas or explosive mixture in gas motor engines.

7500. Capitaine & Brünler.—Improvements in gas engines.

7581. Capitaine & Brünler.—Improvements in the production of a compressed gaseous compound for use in gas motors and for other purposes, and apparatus therefor.

7920. Dawson.—Improvements in gas engines.

7929. Newton.—Improvements in gas motor engines.

8134. Crossley.—An improved gas engine.

8160. Wordsworth & Wolstenholme.—Improvements in gas engines.

8411. Humes.—Improvements in hydro-carburetted air engines.

8583. Newton.—Improvements in gas motor engines.

8584. Treeton.—Improvements in or relating to gas engines.

8897. Sturgeon.—Improvements in gas engines.

9801. Colton (Hartig).—An improved gas engine.

10227. Priestman & Priestman.—Improvements in the construction and working of motor engines operated by the combustion of benzoline or other liquid hydrocarbons.

10401. Justice (Hale).—Improvements in gas engines.

10786. Daimler.—Improved vehicle propelled by a gas or petroleum motor engine.

11290. Redfern (Smyers).—Improvements in gas engines or engines actuated by the explosion or combustion of mixed gas or vapour and air.

11294. Clark (The Economic Motor Company, Incorporated).—Improvements in gas engines.

11422. Magee.—Improvements in gas engines.

11555. Cattrall & Storet.—Improvements in regulators for gas engines.

11558. Gillott.—Improvements in gas motors.

11933. Abel (Gas-Motoren-Fabrik Deutz).—An improvement in the slides and passages of gas motor engines.

12424. Southall.—An improvement in gas motor engines.

12483. Clark (The Economic Motor Company, Incorporated).—Improvements in gas engines.

12896. Schiltz.—Improvements in gas and petroleum engines.

13163. Groth (Daimler).—Improvements in gas and oil motive power engines.

NO.

13309. Dinsmore.—Improvements in rotary air and gas motor engines.

13623. Royston.—Improvements in, and in connection with, motive power engines actuated by the combustion of a mixture of gas or vapour and atmospheric air.

14394. Nash.—Improvements in liquid fuel vapour engines and method of operating the same.

14574. Black.—Improvements in the construction of steam and other motive power engines of the horizontal and incline and vertical table class.

15194. Burgh and Gray.—Improvements in motors actuated by the expansion of gases resulting from the combustion of fuel in the motor.

15243. Atkinson.—Self-starting valve for gas engines.

15475. Von Ruckteschell.—An improved explosion engine.

15525. Ashby.—Improvements in gas engines.

15710. Johnson (Deboutteville & Malandin).—Improvements in governors or regulators for gas and other motive power engines.

15737. Rogers.—Improvements in gas engines.

15845. Bickerton.—Improvements in gas motor engines.

15874. Wilcox.—Improvements in gas engines.

15875. Wilcox.—Improvements in gas engines.

15876. Wilcox.—Improvements in gas engines.

15936. Wimshurst.—An improved method of equalising the power given off by gas or other engines or motors.

1886.

11. Johnson (Deboutteville & Malandin).—Improvements in gas engines.

207. Butterworth.—Improvements in motors worked by combustible gas or vapour.

478. Fairweather (Babcock).—Improvements in air or gas engines.

493. Nash.—Improvements in gas engines.

665. Magee.—Improvements in gas motor engines.

942. Brine.—Improvements in gas engines.

1394. Priestman & Priestman.—Improvements in motor engines operated by the combustion of liquid hydrocarbon.

1433. McGhee.—Improvements in gas engines.

1464. Humes.—Improved means for mixing and igniting combustible charges operating liquid hydrocarbon engines.

1696. Welch & Rook.—An improved gas engine.

1797. Shillito (Capitaine).—An improved method and means for cooling the cylinders of gas, petroleum, hot air, and similar motors.

1958. Haddan (Jonasen).—Improvements in gas motors.

2140. Capitaine & Brünler.—Improvements in oil, petroleum, naphtha, and similar motors.

2174. Skene.—Improvements in gas engines.

NO.

2272. Leigh (Spiel).—Improved supply valve gear for petroleum or gas engines.

2447. Shaw.—Improvements in the construction of gas engines.

2653. Boulton & Perrett.—Combined steam and gas engines.

2993. Milburn & Hannan.—Improvements in motors worked by combustible gas or vapour.

3010. Deacon.—Improvements in and in connection with motive power engines actuated by pressure due to heat of combustion.

3402. Fielding.—A gas motor engine.

3473. Davy.—An improvement in gas engines.

3522. Atkinson.—Improvements in gas engines.

4234. Niel.—Improvements in gas engines.

4460. Dawson.—Improvements in gas engines.

4785. Hutchinson.—Improvements in engines actuated by the thermodynamic energy of petroleum and similar combustible fluids.

4881. Justice (Taylor).—Improved combined gas engine and fluid pump.

5597. Humes.—Improved means for preventing ‘back ignition’ in hydrocarbon engines.

5665. Bernardi.—Improvements in and relating to gas engines or motors.

5789. Benz.—Improvements in gas motors for wheeled vehicles and in their application thereto.

5804. Abel.—Improvements in gas motor engines.

6161. Redfern (Gardie).—An improved motor, and apparatus for generating gas therefor.

6165. Leigh (Spiel).—Improvements in petroleum and gas engines.

6551. Wright & Charlton Wright.—Improvements in petroleum and such like engines.

6612. Gillespie.—Improvements in gas motor engines.

6670. Nash.—Improvements in construction and method of operating gas engines.

7427. Rollason.—Improvements in gas engines.

7658. Nixon.—Improvements in gas engines having two pistons in the same cylinder.

7936. Butterworth.—Improvements in motors worked by combustible gas.

8210. Roots.—A petroleum engine.

8436. Weatherhogg.—Improvements in petroleum and similar engines.

9563. Fielding.—Ignition apparatus for gas motor or oil motor engine.

9598. Johnson (Deboutteville & Malandin).—Improvements in apparatus for carburetting air.

9866. Stuart.—Improvements in petroleum and other explosive engines.

10332. Boys & Cunynghame.—Reducing or preventing noise of escaping gas or vapour.

10480. Schiltz.—Improvements in or connected with petroleum motors or engines worked with liquid fuel.

NO.

11269. Humes.—Improvements in or applicable to motor engines operated by the combustion of fluid hydrocarbon.

11285. Crossley.—Improvements in valves for gas and oil motor engines.

11576. Bolt.—Improvements in gas engines.

12068. Hutchinson and London Economic Motor and Gas Engine Co.—Improvements in motor engines worked by combustible gases or petroleum vapour or spray.

12134. Butterworth & Butterworth.—Improvements in engines in which power is obtained by the ignition and expansion of a combustible mixture.

12368. Rollason.—Improvements in gas or vapour engines.

12640. Sutcliffe.—Improvements in utilising the waste heat of gas and combustion explosive motor engines for heating water.

12912. Clerk.—Improvements in gas motors.

13229. Humes.—Improvements in and connected with motor engines operated by the combustion of fluid hydrocarbon.

13517. Maccallum.—Improvements in and relating to the propulsion of navigable vessels.

13655. Rockhill.—Improvements relating to flywheel guards.

13727. Newton (Murray).—Improvements in the construction of gas engines.

14034. Daimler.—Apparatus for effecting marine propulsion by gas or petroleum motor engines.

14578. McGhee.—An improved gas motor engine, specially applicable for use with mangling machines.

15307. Robson.—Improvements in gas engines.

15319. Stuart & Binney.—Improvements in gas, petroleum, and other hydrocarbon explosive engines or motors.

15327. Taylor.—An improved gas motor engine.

15472. Southall.—An improvement in gas motor engines.

15507. Wordsworth & Wolstenholme.—Improvements in gas or other hydrocarbon motors.

15507A. Wordsworth & Wolstenholme.—Improvements in gas or other hydrocarbon motors.

15764. Griffin.—Improvements in apparatus for automatically shutting off the gas supply of gas motor engines.

15955. Hearson.—Improvements in arrangements for utilising the vapour of volatile liquid hydrocarbons for actuating motive power engines.

16779. Priestman & Priestman.—Improvements in the construction and working of hydro-carburetted air engines, and in apparatus applicable thereto.

1887.

8. Turnock.—Improvements in apparatus for converting reciprocating into rotary motion, and in the application of such apparatus to steam and other fluid pressure engines.

NO.

125. Sterry & Sterry.—Improvements in explosive gas engines.

516. Newhall & Blyth.—Improvements in gas and other hydrocarbon engines.

847. Abel (The Gas-Motoren-Fabrik Deutz).—Igniting apparatus for gas engines.

888. Hosack.—Improvements in internal combustion 'heat' engines.

1168. Charter, Galt & Tracy.—Improvements in gas engines.

1189. Abel (The Gas-Motoren-Fabrik Deutz).—Improvements in gas motor engines.

1262. Benier.—Improvements in hot air engines.

1266. Adam.—Improvements in gas and other hydrocarbon engines.

1454. Priestman & Priestman.—Improvements in the construction and working of hydro-carburetted air engines.

1986. Pinkney.—Improvements in hammering, stamping, punching, and other like machinery actuated by explosive gaseous mixture.

2194. Haddan (Gavillet & Martaresche).—Improvements in gas engine.

2236. Bamford.—Improvements in lubricators used for gas engines and other purposes.

2368. Thomas.—Improvements in engines driven by gas, steam, petroleum, and the like.

2520. Browett & Lindley.—Improvements in motor engines worked by gas or hydrocarbon.

2631. Tellier.—Improvements in tramway and railway locomotives.

2783. Knight.—Improvements in engines worked by the heavier hydrocarbons.

3109. Spiel.—Improvements relating to engines or motors chiefly designed to be driven by means of carburetted air.

3934. Griffin.—Improvements in the arrangement and construction of gas motor engines.

4160. Beechey.—Improvements in gas-bags or apparatus for regulating the supply of gas to gas engines.

4403. Ross & McDowall.—Improvements in rotary engines and pumps.

4511. Ridealgh.—Improvements in gas engines.

4564. Sington.—Improvements in and relating to the traction or propulsion of tramcars and road vehicles by means of gas and similar engines or motors.

4757. Casper (Tavernier).—Improvements in gas and other engines operated by explosive mixtures.

4843. Stevens.—Improvements in combined gas and compressed air engines.

4923. Sturgeon.—Improvements in certain gas engines.

4940. Wallwork.—Improvements in self-acting mechanism or apparatus for supplying lubricant to parts of gas engines and other machinery.

5095. Johnson (La Société des Tissages et Ateliers de Construction Diederichs).—Improvements in gas engines.

NO.

5336. Bernhardt.—Improvements in regulating apparatus for gas motor engines.

5485. Hargreaves.—Improvements in and connected with internal combustion thermo-dynamic engines.

5833. Crossley.—A combined gas motor engine and dynamo electric machine.

5951. Priestman & Priestman.—Improvements in motor engines operated by the combustion of liquid hydrocarbon.

5981. Körting.—Improvements in gas motors.

6501. Dawson.—Improvements in engines worked by explosive mixtures

7350. Faber.—Improvements in gas motors

7677. Davy.—An improved gas engine.

7771. Wastfield.—Improvements in and relating to gas engines.

7925. Wallwork & Sturgeon.—Improvements in gas engines.

8818. Beechey.—Improvements in gas motor engines.

9111. Haddan (Archat).—Improvements in gas, petroleum, and other hydrocarbon engines.

9717. Ducretet.—Improvements relating to apparatus for filtering or purifying oil in connection with gas and petroleum engines.

10176. Hahn.—Improvements in gas motors.

10176A. Hahn.—Improvements in carburettors for gas motors and other purposes.

10202. H. C. Bull & Co. and H. C. Bull.—Improvements in and connected with gas motors.

10360. Dougill.—Improvements in gas motor engines.

10460. Griffin.—Improvements in double cylinder gas motor engines.

11255. Justice (Hale).—Improvements in gas and pumping engines.

11345. Lindley & Browett.—Improvements in gas motor engines.

11444. Abel (The Gas-Motoren-Fabrik Deutz).—Improvements in igniting apparatus for gas motor engines.

11466. Wordsworth.—Improvements in gas or other hydrocarbon motors.

11503. Abel (The Gas-Motoren-Fabrik Deutz).—Improvements in motor engines worked by combustible gas, vapour, or spray and air.

11567. Niel & Bennett.—Improvements in hydrocarbon engines.

11678. McGhee & Burt.—A new or improved combined mincing machine and gas motor engine.

11717. Embleton.—Improvements in gas motor engines.

11911. Atkinson.—Improvements in gas engines.

12187. Abel (The Gas-Motoren-Fabrik Deutz).—Improvements in gas motor engines.

12432. Priestman & Priestman.—Improvements in or applicable to motor engines operated by the combustion of hydrocarbon vapour.

12591. Lane.—Improved method of applying or utilising compressed combustible gases for the production of motive power.

NO.

12592. Hearson.—Improvements in and connected with the vaporisation of volatile liquid hydrocarbons, and the utilisation of the vapour thereof for actuating motive power engines, and apparatus or arrangements for those purposes.

12696. List, List, & Kosakoff.—Improvements in petroleum engines.

12749. Charter, Galt, & Tracy.—Improvements in gas engines.

12863. Körting.—Improvements in gas engines.

13436. Lea.—Improvements in gas engines.

13555. Knight.—Improvements in engines worked by mineral oils.

13916. Davy.—Improvements in gas engines.

14027. Barker.—Improvements in gas engines.

14048. Middleton.—A new or improved gas motor engine.

14269. Hutchinson.—Improvements in and relating to utilising the chamber or space between the cylinder and jackets of engines or motors for the purpose of vaporising oil in connection with steam, gas, oil, or other engines or motors using heat as a source of power.

14952. Schmid & Bechfeld.—Improvements in gas engines.

15010. Crossley & Anderson.—Ignition apparatus for gas or oil motor.

15598. Butler.—Improvements in hydrocarbon motors, and in the method of their application for the propulsion of tricycles and other light vehicles.

15658. Davy.—Improvements in gas and other engines.

16029. Williams.—Improvements in gas motor engines.

16144. Williams.—Improvements in gas motor engines.

16257. Ravel & Breittmayer.—Improvements in and relating to gas engines.

16309. Sturgeon.—Improvements in gas engines.

17108. Abel (The Gas-Motoren-Fabrik Deutz).—Improvements in motor engines worked by combustible gas.

17353. Wallwork & Sturgeon.—Improvements in apparatus for governing the speed of gas engines.

17686. Bickerton.—Improvements in the method of, and apparatus for, starting gas engines.

17896. Abel (The Gas-Motoren-Fabrik Deutz).—Apparatus for heating the igniting tubes of gas motor engines.

1888.

270. Priestman and another.—Improved means for facilitating the starting of hydrocarbon engines, and for regulating the ignition of the inflammable charges whereby same are operated.

512. Sington.—Improvements in gas, petroleum, and similar engines.

688. Abel (The Gas-Motoren-Fabrik Deutz).—Improvements in igniting apparatus for gas motor engines.

1336. Imray.—Improvements in apparatus for starting tramway cars.

NO.

1381. Blessing.—Improvements in gas and other hydrocarbon engines.

1705. Crossley.—Compound gas or oil motor engine.

1780. Butler.—Improvements in hydrocarbon motors.

1781. Butler.—Improvements in hydrocarbon motors.

2466. Quack.—Improvements in motor engines worked by combustible gas or vapour and air.

2804. Johnson (La Société Salomon).—Improvements in gas engines.

2805. Johnson (Deboutteville & Malandin).—Improvements in starting gear for gas engines.

2913. Oechelhaeuser.—Improvements relating to gas engines.

3020. Abel (The Gas-Motoren-Fabrik Deutz).—Improvements in motor engines worked by combustible gas or vapour and air.

3095. Abel (The Gas-Motoren-Fabrik Deutz).—Improvements in igniting apparatus for gas or oil motor engines.

3427. McGhee & Burt.—Improvements in gas motor engines.

3546. Rollason & Hamilton.—Improvements in and connected with gas and vapour engines.

3756. Crossley.—Improvements in igniting apparatus for gas and oil motor engines.

3964. Gase.—Improvements in the mode of working gas engines.

4057. Turner & Brightmore.—Improvements in the application of compressed atmospheric air to motors.

4624. Crossley.—An improvement in valve and governing gear for gas or oil motor engines.

4944. Wilson.—Improvements in or pertaining to combined arrangements of gas engines and gas producers.

5204. Lake (Beuger).—Improvements in and relating to ignition apparatus for gas, petroleum, or other engines or motors.

5628. Tavernier & Casper.—Improvements in and relating to gas and other engines.

5632. Humes.—Improvements in or applicable to motor engines operated by the combustion of hydrocarbon vapour.

5724. Abel (The Gas-Motoren-Fabrik Deutz).—An improvement in motor engines worked by the combustion of spray of petroleum or other combustible liquids.

5774. Rowden.—Improvements in motors worked by gas or other combustible bodies.

5914. Lake (Spiel).—Improvements in and relating to hydrocarbon engines.

6036. Gase.—Improvements in gas engines.

6088. Thompson (Durand).—Improvements in and relating to engines or motors, and to the production of carburetted air for driving the same.

NO.

6468. Korytynski.—Improvements in engines designed to produce motive power through the consumption of inflammable vapours or gas.

6794. Stitt.—Improvements in or connected with mechanically propelled lifeboats, applicable also to other craft.

7521. Wordsworth.—Improvements in gas or liquid hydrocarbon motors.

7547. Browett & Lindley.—Improvements in motor engines worked by gas or hydrocarbon.

7893. Schnell.—Improvements in motor engines actuated by a mixture of gas, or the vapour of a hydrocarbon or hydrocarbons, and atmospheric air.

7927. Stubbs.—Improvements in motor engines actuated by the combustion of mixtures of combustible gas and air and the vapour of a hydrocarbon or hydrocarbons, or other combustible mixtures.

7934. Southall.—Improvements in gas motor engines.

8009. Nelson.—Improvements in hydrocarbon engines.

8252. Johnston.—Improvements in motors to work with combustible gas or vapour.

8273. Kostovitz.—Improvements in and relating to gas and hydrocarbon engines.

8300. Deboutteville & Malandin.—Improvements in starting gear for gas engines.

8317. Altmann.—Improvements in petroleum motors.

9249. Deboutteville & Malandin.—Improvements in governors for gas engines and other like motors.

9310. Roots.—Improvements in gas engines.

9311. Roots.—Improvements in hydrocarbon engines.

9342. Aria & Chemin.—Process for treating leather pistons to render same impervious to action of petroleum and heavy oils.

9578. Dougill.—Improvements in gas motor engines.

9602. Abel (Gas-Motoren-Fabrik Deutz).—Improvements in valve apparatus for gas and oil motor engines.

9691. Knight.—Improvements in engines worked by mineral oils.

9705. Rowden.—An improved motor actuated by the explosions of mixtures of inflammable gases or vapours and atmospheric air.

9725. Middleton.—Improvements in flying machines, and apparatus for propelling the same.

10165. Purnell.—An improved gas motor engine.

10350. Nash.—Improvements in gas engines.

10462. Williams.—Improvements in mechanism for regulating the supply of gas or other fluid to gas or similar engines.

10494. Hall.—Improvements in motor engines operated by the combustion of explosive mixtures of fluids.

10667. Binney & Stuart.—Improvements in petroleum and other hydrocarbon explosive engines and motors.

NO.
10748. Campbell.—Improvements in gas motor engines.
10980. Hargreaves.—Improvements in internal combustion thermo-motors.
10983. Piers.—An improved form of engine adapted to tramcars and locomotives.
10984. Piers.—An improved method for starting gas engines and hot air and petroleum engines, particularly when such engines are applied to tramcars or locomotives.
11067. Roots.—Improvements in hydrocarbon or petroleum engines.
11161. Morris & Wilson.—Improvements in apparatus for the generation of gas from hydrocarbon oils.
11242. Barker.—Improvements in gas engines.
11614. Purchas & Friend.—Improvements in hydrocarbon motors.
12361. Hargreaves.—Improvements in internal combustion thermo-motor.
12399. Charon.—Improvements in gas motors with variable expansion.
13414. Boult (Larrivel & Aeugenheyster).—Improvements in gas motor.
14076. Stuart & Binney.—Improvements in hydrocarbon explosive engines.
14248. Crossley, Holt & Anderson.—An improvement in gas motor engines.
14349. Abel (The Gas-Motoren-Fabrik Deutz).—Igniting apparatus for gas and oil motor engines.
14401. Hearson.—Improvements in motive power engines actuated by the firing of inflammable gas or vapour in admixture with air.
14614. Royston.—Improvements in and connected with internal combustion heat engines.
14831. Williams.—Improvements in mechanism for governing the speed of gas and similar motor engines.
15158. Richards.—Improvements in hydrocarbon engines, partly applicable to other motor engines.
15448. Thompson (Regan).—Improvements in or relating to gas engines.
15840. Boult (Capitaine).—Improvements in or relating to gas motors.
15841. Boult (Capitaine).—Improvements in or relating to igniting apparatus for gas motors.
15845. Boult (Capitaine).—Improvements in gas motors.
15846. Boult (Capitaine).—An improved friction clutch or coupling specially applicable to gas motors.
15858. Jensen (Weilbach).—Improvements in apparatus for braking and restarting of rotating axles or shafts of tramcars, gas engines, and other machinery.
15882. Roots.—Improvements in or connected with petroleum engines.
16057. Lindley & Browett.—Improvements in liquid hydrocarbon motor engines.
16183. Simon.—An improvement in or connected with gas engines.
16220. Roots.—Improvements in gas engines.
16268. Lalbin.—Improvements in and relating to gas engines.
16605. Menzies.—Improvements in and relating to piston packing rings.

NO.

17167. Körting.—Improvements in gas and petroleum engines.

17413. Crossley & Anderson.—Improvements in igniting apparatus for gas or oil motor engines.

18377. Shaw.—Improvements in gas and other explosive engines.

18761. Hargreaves.—Improvements in internal combustion thermo-motors.

19013. Pinkney.—Improvements in gas motor engines.

1889.

121. Boult (Capitaine).—Improvements in or relating to distributing mechanism for gas motors.

441. Paton.—Improvements in appliances for starting gas and similar engines.

708. Taylor.—An improved gas motor engine.

875. Repland (Niel).—Improvements in gas engines.

1603. Tavernier.—Improvements in and relating to engines.

1957. Publis.—Improvements in gas motors.

2144. Piers.—The application of gas and petroleum and like engines to locomotive and other intermittent work.

2637. Miller.—Improvements in and relating to petroleum, oil, vapour, gas, and other explosive power engines.

2649. Gardie.—An improved gas engine and gas generator therefor.

2760. Hartley.—Improvements in apparatus for measuring liquids.

2772. Smith.—Improvements in or relating to the starting of motive power engines.

3331. Adams.—Improvements in engines and motors actuated by products of combustion.

3525. Pinkney.—Improvements in gas engines.

3820. Williams.—Improvements in gas motor engines.

3887. Imray (Weilbach).—Improvements in brake apparatus for revolving axles or shafts.

3972. Roots.—Improvements in gas engines.

4710. Oechelhaeuser.—Improvements in and relating to gas engines.

4796. Schimming.—Improvements in, and apparatus for, superheating steam and applying the same to steam engines.

5072. Southall.—Improvements in gas or oil motor engines.

5165. Lake.—Improvements in and relating to gas or vapour engines for the propulsion of ships and other purposes. (The Secor Marine Propeller Company.)

5199. Millet.—Improvements in gas and other fluid pressure engines for terrestrial and aërial propulsion.

5301. Theerman.—Improvements in motor engines operated by the ignition of explosive mixtures of air and petroleum, or other hydrocarbon, or gas.

5397. Nelson & McMillan.—Improvements in gas motor engines.

NO.

5616. Abel (Gas-Motoren-Fabrik Deutz).—Improved mechanism for reversing the motion derived from a motor shaft, applicable to the motor engines of vessels and vehicles, and for other purposes.

6161. Partridge & Brutton.—Improvements in means or apparatus for starting gas and other engines and machines.

6296. Bánki & Csonka.—Improved valve motion for gas engines.

6682. Priestman and another.—Improvements in or applicable to motor engines operated by the combustion of hydrocarbon vapour.

6748. Cordenons.—Improvements in rotary engines.

6831. Knight.—Improvements in engines worked by mineral oils.

7069. Tavernier & Casper.—Improvements in and relating to engines worked by explosive mixtures.

7140. Tellier.—Improvements in the production of motive power by the employment of gas, steam, and vapour, and in apparatus employed therefor, and for its utilisation.

7522. Sumner.—An electric ignition apparatus for gas, petroleum, oil, or combustible vapour engines.

7533. Sumner.—An ignition apparatus for gas, petroleum, oil, or combustible vapour engines.

7594. Crowe & Crowe.—Improvements in gas and hydrocarbon motive engines.

7640. Lawson.—Improvements in gas engines.

8013. Weatherhogg.—Improvements in and relating to petroleum and similar engines.

8778. Imray (Glaser).—Improvements in petroleum motor engines.

8805. Clerk.—Improvements in gas engines.

9203. Butler and others.—Improvements in and connected with motors in which an explosive mixture of air and petroleum is used.

9685. Hunt & Howden.—Improvements in motors actuated by combustible gas or vapour.

9834. Roots.—Improvements in petroleum or hydrocarbon engines.

10007. Daimler.—Improvements in gas and petroleum motor engines.

10286. Rogers & Wharry.—Improvements in gas engines.

10634. Bull.—Improvements in petroleum and other explosive vapour or gas engines.

10669. Rowden.—Improvements in gas motors.

10831. Leigh (Forest & Gallice).—Improvements in compound gas or petroleum engines.

10850. Wastfield.—Improvements in or relating to petroleum or hydrocarbon engines.

11038. White & Middleton.—Improvements in gas engines.

11162. Williams.—An improved incandescent tube for firing the explosive charges of gas and other similar motor engines.

11395. Hartley.—Improvements in hydrocarbon or petroleum engines.

NO.

11926. Bull.—Improvements in vapour gas engines.

12045. Allison (McNett).—Improvements in combined gas engines and carburetters.

12447. Hoelljes.—Improvements in, and in the method of operating, gas engines.

12472. Thompson (Covert).—Improvements in or relating to gas engines or gas motors.

12502. Lanchester.—Improvements in apparatus for governing gas and other motive power engines.

13572. McAllen.—Improvements in gas or oil motor engines.

14592. Huntington.—Improvements in vehicles.

14789. Hargreaves.—Improvements in internal combustion regenerative thermo-motors, some of which said improvements are applicable to gas and hot air engines.

14868. Binney & Stuart.—Improvements in hydrocarbon engines.

14926. Diederichs.—Improvements in or connected with combustible vapour engines.

16202. Green.—Improvements in gas engines.

16391. Lindemann.—Improvements in gas and petroleum engines.

16393. Girardet.—Improvements in means for generating and utilising gas or vapour, and in apparatus therefor.

16434. Hamilton & Rollason.—Improvements in and connected with gas or vapour engines.

17008. Haedicke.—A combined gas and steam motor engine.

17024. Boult (Rotten).—Improvements in petroleum or similar motors.

17295. Niel & Janiot.—Improvements in gas motors.

17344. Lowne.—Improvements in atmospheric engines, partly applicable to other motive power engines.

18746. Abel (The Gas-Motoren-Fabrik Deutz).—Improvements in igniting apparatus for gas and oil motor engines.

18847. Barnett & Daly.—Improvements in gas or vapour engines, and in electric exploding devices, or apparatus for such engines.

19868. Lanchester.—Improvements in gas motor engines.

20033. Lindley & Browett.—Improvements in hydrocarbon motor engines.

20115. Ford.—Improvements in rotary gas engines, parts of which improvements are applicable to other engines.

20161. Duerr.—Improvements in gas and petroleum motors.

20166. Frederking and another.—Improvements in positive motion gear for lift valves.

20249. Crist & Covert.—Improvements in gas engines and igniters for the same.

20482. Atkinson.—Improvements in internal combustion heat engines.

20703. Snelling.—Improvements in rotary engines to work with steam, air, gas and other fluids.

NO.

20892. Abe (The Gas-Motoren-Fabrik Deutz).—Improved apparatus for regulating the speed of gas and oil motor engines.

1890.

1150. Lindner.—Improvements in or connected with petroleum engines.

1586. Tavernier & Casper.—Improvements in or relating to the cylinders and pistons of engines operated by explosive mixtures.

1943. Abel (The Gas-Motoren-Fabrik Deutz).—Improvements in motor engines worked by oil vapour.

2207. Scollay.—Improved means for regulating the admission of gas and air in atmospheric burners, and for supplying gas engines.

2384. La Touche.—Improvements relating to hot air engines.

2647. Lake (Beckfield & Schmid).—Improvements in gas engines.

2919. Grob and others.—Improvements in petroleum engines.

4164. Abel (Gas-Motoren-Fabrik Deutz).—Improvements in the means and apparatus for governing gas and petroleum engines.

4362. Binns.—Improvements in gas motor engines.

4574. Kaselowsky.—Improvements in gas and petroleum motors.

4823. Otto.—Improvements in gas or oil motor engines.

5005. Baxter (Holst).—Improvements in gas engines.

5192. Melhuish.—Improvements in gas and petroleum motors.

5273. Otto.—Improvements in gas or oil motor engines.

5275. Otto.—Improvements in petroleum or oil motor engine

5479. Lanchester.—Improvements in gas motor engines.

5621. King (Connelly).—Improvements in or connected with driving gear for giving motion to tramcars and other vehicles propelled by motors.

5933. Dheyne and others.—Improvements in gas engines operated by gas generated from petroleum or other liquid hydrocarbons.

5972. Otto.—Improvements in gas and oil motor engines.

6015. Hamilton.—Improvements in gas or combustible vapour motor engines.

6113. Otto.—Improvements in gas and oil motor engines.

6217. Griffin.—Improvements in apparatus for producing combustible gas for gas motor engines or other purposes.

6407. Dawson.—Improvements in gas engines.

6910. Dorrington & Coates.—Improvements in gas engines.

6912. Fielding.—Improvements in gas motor engines.

6990. Butler.—Improvements in motive engines operated by explosive mixtures of petroleum and air.

7146. Stuart & Binney.—Improvements in engines operated by the explosion of mixtures of combustible vapour or gas and air.

7177. Mewburn (Proell and others).—Combined gas and compressed air motors.

NO.

7626. Johnson (Lantsky).—Improvements in engines or motors actuated by products of explosion or combustion.

8431. Seage & Seage.—Improvements in gas motor engines.

9496. Robson.—Improvements in gas or other motive power engines.

10051. Wilkinson.—Improvements in apparatus for producing hydrocarburetted air for motive power purposes.

10089. Beechey.—Improvements in gas motor engines.

10642. Vogelsang & Hille.—Improvements in valve gear of gas engines and petroleum engines.

10718. Grob and others.—Improved means for effecting the ignition of vapour in gas and petroleum motors.

10952. Griffin.—Improvements in apparatus for regulating and governing the admission of gas and air into gas motor engines.

11062. Lake (Brayton).—Improvements in hydrocarbon engines.

11755. Richardson & Norris.—Improvements in gas or vapour engines.

11834. Schiersand.—An improved spring governor or regulator for gas and other engines and motors.

12314. Holt.—An improvement in supply, exhaust, and governing apparatus for oil motor engines.

12472. Stuart.—Improvements in compound hydrocarbon explosive engines.

12678. Justice (Baldwin).—Improvements in tramcars and motors.

12690. McGhee & Burt.—Improvements in and relating to gas motor engines.

12760. Stallaert.—Improvements in motors adapted to be operated by explosives.

13019. Vermand.—Improvements relating to gas engines.

13051. Stuart.—Improvements in rotary motors.

13352. Ovens & Ovens.—Improvements in gas engines.

13594. Offen.—Improvements in gas and other explosive engines.

14382. Hall.—Improvements in igniting arrangements for gas or oil motor engines.

14549. Roots.—Improvements in gas engines.

14787. Robinson.—Improvements in gas or combustible vapour engines.

14900. Deboutteville & Malandin.—Improvements in or connected with gas engines.

15309. Hartley.—Improvements in hydrocarbon or petroleum engines.

15525. Dheyne and others.—Improvements in apparatus for use in connection with engines operated by gas generated from petroleum or other liquid hydrocarbon.

15526. Dheyne.—Improvements in engines operated by gas generated from petroleum or other liquid hydrocarbon.

15994. Stuart & Binney.—Improvements in or connected with engines operated by the explosion of mixtures of combustible vapour, or gas and air.

NO.

16301. Cruikshank (White & Middleton).—Improvements in gas engines.

17167. Pinkney.—Improvements in and connected with engines operated by gas generated from petroleum or other liquid hydrocarbons.

17299. Mottershead.—Improvements in or connected with gas engines.

17371. Higginson.—Improvements in gas engines.

18161. Sayer.—Improvements in gaseous pressure apparatus for producing continuous rotary or rectilinear motion.

18401. Griffin.—Improvements in apparatus for igniting the charge in petroleum and other hydrocarbon motors.

18645. Boult (Sharpneck).—Improvements in gas engine governors.

19171. Kaselowsky.—Improvements in ignition devices for gas motors.

19513. Lanchester.—Improvements in the igniting and starting arrangements of gas and hydrocarbon engines.

19559. Roots.—Improvements in petroleum or liquid hydrocarbon engines.

19775. Lanchester.—An improved ignition device for starting gas motor engines.

19791. Lobet.—Improvements in gas and other motive power engines.

19846. Lanchester.—Improvements in uniting and starting gear for gas engines.

19962. Griffin.—Improvements in petroleum and other liquid hydrocarbon motors.

20888. Holt.—Improvements in motor engines worked by gas, or by oil or other vapour.

21165. Lentz and others.—A single-acting gas motor engine.

1891.

103. Pinkney.—Improvements in and connected with engines operated by gas generated from petroleum or other liquid hydrocarbon.

110. Carling.—An improvement in gas engines and other like motors.

191. Gray.—Improving engines actuated by the explosion of a mixture of air with the vapour of petroleum or other hydrocarbons, or of tar, creosote, or other liquid, which when heated are more or less volatile, and the vapour of which, when mixed with air, forms an explosive mixture.

227. Bickerton.—Improvements in gas engines.

297. Bickerton.—Improvements in governors for gas engines.

383. Boult (Berliner Maschinenbau Actien Gesellschaft).—Improvements in or relating to the valve gear of gas, petroleum, and other similar engines.

741. Adams.—Improvements in engines, motors, and pumps.

816. MacCallum.—Improvements in gas, petroleum, and like engines.

834. Miller.—Improvements in petroleum, oil, vapour, gas, and other explosive power engines.

970. Williams.—Improvements in gas motor and similar engines.

NO.

1083. Robinson.—Improvements in gas or combustible vapour engines.

1299. Williams.—Improvements in gas motor engines.

1447. Weatherhogg.—Improvements in gas and hydrocarbon motor engines.

1903. Abel (Gas-Motoren-Fabrik Deutz).—Improvements in gas and oil motor engines.

2053. Gray.—Improvements in vaporisers for generating petroleum and other hydrocarbon vapours for use in motors and engines.

2815. Rouzay.—Improvements in gas or petroleum engines.

2976. Hughes (Cordenons).—Improvements in gas engines.

3261. Weiss.—Improvements in petroleum or oil motor engines.

3350. Coffey.—An improved gas engine.

3669. Rockhill.—An improved gas engine.

3682. Wertenbruch.—Improvements in or connected with gas and other hydrocarbon engines and the pistons (or rings) thereof.

3830. Priestman & Priestman.—Improvements in or applicable to hydro-carburetted air engines.

3948. Trewhella.—Improvements in apparatus for condensing and utilising the residue of gases exploded to form a vacuum in engines propelled by gas or other explosive material.

4004. Dawes.—A new or improved apparatus to be used for the starting of gas or other engines.

4142. Priestman & Priestman.—Improvements in hydro-carburetted air engines.

4222. Lanchester.—Improvements in gas engines.

4355. Campbell.—Improvements in gas motor engines.

4535. Griffin.—Improvements in governing gas motor engines and in connection therewith.

4771. Cooper.—Improvements in gas and vapour engines.

4862. Lindemann.—Improvements in gas and petroleum engines.

5158. Vanduzen.—Improvements in gas and gasoline engines.

5250. Love & Priestman Bros., Ltd.—Improvements in or applicable to motor engines operated by the combustion of hydrocarbon vapour or gas and by the expansion of readily liquefying gases.

5490. Higginson.—Improvements in gas engines.

5663. Fachris.—An improved motive power engine, actuated by explosives.

5747. Skene.—An improved fluid pressure regulator.

6090. Bickerton.—Improvements in gas motor engines.

6410. Day.—Improvements in gas engines.

6578. Barclay.—Improvements in and relating to gas engines.

6598. Ridealgh & Welford.—Improvements in gas or vapour engines.

6717. Abel (The Gas-Motoren-Fabrik Deutz).—Improvements in apparatus for supplying oil or other liquids under a constant head or pressure.

6727. Van Rennes.—Improvements in petroleum engines.

NO.

6949. Key.—Improvements in and relating to the treatment of the discharge gases from gas engine cylinders.

7047. Purnell.—A governor for gas and oil motor engines.

7157. Altmann.—Improvements in governors for gas and petroleum motors.

7313. Pinkney.—Improvements in engines worked by the explosion of gas.

8032. Horn (Vanduzen & Vanduzen).—An improved gas engine.

8069. Capitaine.—Improvements in gas motors.

8251. Barrett & Ticehurst.—Improvements in motor engines actuated by explosions.

8289. Hardingham (Cleland).—An improved rotary engine.

8469. Abel (Gas-Motoren-Fabrik Deutz).—Improvements in gas and oil motor engines.

8821. Shillitto (Grob, Schultze & Niemczik).—Igniting tubes for gas and petroleum motors.

9006. Boult (Levasseur).—Improvements in gas, petroleum, and carburetted air engines.

9038. Southall.—Improvements in gas and oil motor engines.

9247. Day.—Improvements in gas or vapour engines.

9268. Bosshardt (Huntington).—Improvements in governors and valve movements for gas engines.

9323. Huelser (J. M. Grob & Co.).—A new or improved gasifying contrivance for petroleum motors.

9805. Hawkins.—Improvements relating to vibrating engines, applicable to pumps or blowers.

9865. Dawson.—Improvements in gas engines.

9931. Withers & Covert.—Improvements in or relating to vibrating gas engines.

10298. Crossley & Holt.—Improvements in oil motor engines.

10333. Fiddes & Fiddes.—Improvements in gas motor engines.

11132. Irgens.—Improvements in and relating to gas or petroleum engines or motors.

11138. Pinkney.—Improvements in or connected with engines worked by gas generated from petroleum or other liquid hydrocarbon.

11628. Held.—A new or improved pressure regulator for gas engines.

11680. Kasclowsky.—Improvements in gas and petroleum engines.

11851. Wellington.—An improved ignition tube for gas and like engines.

11861. Lanchester.—Improvements in gas engine starting arrangements.

12330. Settle.—Improved means for actuating road or tram cars and lake or other boats.

12413. Clerk.—Improvements in gas engines.

12981. Menard.—Improved method and means for firing the charges of gas engines.

14002. King (Connelly).—Improvements in gas motors.

NO.

14133. Weyman & Drake.—Improvements in governing and regulating the supply of oil to petroleum or hydro-carbon motors.

14134. Watkinson.—Improvements in thermo-dynamic machines and in apparatus and appliances connected therewith.

14209. Johnson (Genty).—Improvements in non-return valves.

14269. Huelser (Grob & Co.).—Improvements in gas and petroleum motors.

14457. Waller.—An improved apparatus for exhausting gas.

14519. Abel (Gas-Motoren-Fabrik Deutz).—Improvements in igniting apparatus for gas and oil motor engines.

14945. Lanchester.—Improvements in gas governors.

15078. Williams.—Improvements in gas and similar motor engines.

16404. Clerk.—Improvements in gas engines.

17033. Shiels.—Improvements in apparatus for automatically regulating the temperature of the water used in cooling the cylinders of gas and oil engines.

17073. Hornsby & Edwards.—Improvements in explosion engines.

17364. Evers.—Improvements in gas motor engines.

17724. Abel (Gas-Motoren-Fabrik Deutz).—Improvements in valve apparatus for gas and petroleum motor engines.

17815. Evans.—Improvements in gas engines.

17955. Pinkney.—An improved metallic alloy more especially intended for use for gas or petroleum engine igniters, or like articles subjected to great heat.

18020. Shaw & Ashworth.—Improvements in gas engines.

18276. Walch (Dorrington & Coates).—Improvements in valve gears for gas engines.

18424. Lee.—Improvements in gas and hydrocarbon motor engines.

18621. Roots & Seal.—Improvements in or connected with internal combustion engines.

18640. Weyman, Hitchcock & Drake.—Improvements in gas and oil hydrocarbon engines.

18715. Earnshaw & Oldfield.—Improvements in and connected with valves of gas engines.

18788. Clerk.—Improvements in starting gear for gas engines.

19086. McGhee & Burt.—Improvements in and relating to gas motor engines.

19275. Roots.—Improvements in petroleum or liquid hydrocarbon engines.

19318. Barron.—Improvements in or appertaining to gas engines.

19517. Fielding.—An improved method of starting gas engines.

19772. Johnson (Pieper).—Improvements in feed pumps for petroleum engines.

19773. Johnson (Pieper).—Improvements in the means for regulating the temperature of evaporators of petroleum engines.

19811. Ridealgh.—Improvements in gas and petroleum engines.

NO.

20262. Robinson.—Improvements in gas or combustible vapour engines.

20745. Robinson.—Improvements in gas or combustible vapour engines.

20845. Perrollaz.—Improvements in lubricators.

20926. Knight.—Improvements in engines worked by heavier hydrocarbons.

21015. Weyman, Hitchcock & Drake.—Improvements in oil or hydrocarbon motors.

21229. Weyman, Hitchcock, & Drake.—Improvements relating to oil or hydrocarbon motors.

21406. Lanchester.—Improvements in gas engines.

21496. Hartley & Kerr.—Improvements in gas engines.

21529. Miller.—Improvements in valve gear for gas and other engines.

22559. Leigh (Forrest & Gallice).—Improvements in gas and petroleum engines.

22578. Burt.—New or improved starting, stopping, and reversing gear for machinery driven by gas or vapour engines.

22834. Seck.—Improvements in gas and hydrocarbon engines.

22847. Abel (The Gas-Motoren-Fabrik Deutz).—Improvements in petroleum or oil motor engines.

1892.

112. Richardson.—Improvements in the details of gas and vapour engines.

260. Edwards (Petit & Blanc).—Improvements in the means of heating the charge in gas and like engines.

520. Higginson.—Improvements in gas engines.

524. Wilkinson.—Improvements in the working of gas engines.

826. Rankin & Rankin.—Improvements in petroleum and other hydrocarbon motors.

919. Noble & Brice.—Improvements in lubricators for use in connection with gas, oil, or other explosive engines.

926. Simon.—Improvements connected with gas and like engines.

1203. Southall.—Improvements in supply and discharge valves for gas or oil motor engines.

1246. Brooks & Holt.—Improvements in or additions to gas and vapour engines or motors.

1768. Richardson & Norris.—Improvements in gas engines.

1814. Schwarz.—An improvement in or connected with gas engines.

1879. Barker & Rollason.—Improvements in and appertaining to gas-bags for gas engines.

2181. Atkinson.—Improvements in self-starting apparatus for gas and other internal combustion motors.

2492. Atkinson.—Improvements in internal combustion engines.

2495. Swiderski.—An improved oil or gas motor.

NO.
2728. Abel (Gas-Motoren-Fabrik Deutz).—Improvements in gas or oil motor engines.
2854. Leigh (Spiel).—Improvements in liquid hydrocarbon engines.
2862. Crossley & Bradley.—Improvements in starting and igniting apparatus for gas or oil motor engines.
3047. Instone.—An improved oil or gas engine.
3156. Bradford.—Improvements in fluid pressure motive power engines.
3165. Harris.—Improvements in tubes and apparatus for igniting gas, petroleum and vapour engines by intermolecular combustion.
3203. Pinkney.—Improvements in or connected with gas engines.
3292. Czermak, Bergl, & Hutter.—Improvements in gas motor engines.
3417. Humpidge, Humpidge, & Snoxell.—Improvements in gas motor engines.
3574. Robert.—Improvements in and relating to gas engines.
3909. Stuart & Binney.—Improvements in hydrocarbon engines.
4078. Bickerton.—Improvements in governors for gas engines.
4189. Hamilton.—Improvements in gas motor engines.
4210. Lanchester.—Improvements in gas engine details.
4347. Bell & Richardson.—Improvements in portable petroleum or liquid fuel engines.
4352. Richardson & Norris.—Improvements in and appertaining to combustion chambers of petroleum or hydrocarbon engines.
4374. Lanchester.—Improvements in gas and petroleum engines.
4375. Richardson & Norris.—Improvements in the oil-supplying arrangements of petroleum and other hydrocarbon or liquid fuel engines.
5445. Clerk.—Improvements in gas engine governors and valve gear.
5740. Bilbault.—Improvements in and relating to gas and petroleum engines.
5819. Michels (Grob & Co.)—Improvements in feeding devices for petroleum motors.
5972. Bell & Richardson.—Improvements in semi-portable petroleum or liquid fuel engines.
6240. Owen.—Improvements in motors to be operated by either gas or liquid hydrocarbons.
6284. Chatterton.—Method according to which steam and afterwards gas are used as working fluids in the same cylinder for the generation of power.
6655. Morani.—Improvements in gas motors.
6828. Adams.—Improvements in rotary engines, motors and pumps.
6872. Shillito (Swiderski & Capitaine).—An improved petroleum motor.
6952. Dawson.—Improvements in gas engines.
7047. Courtney (Brüenler).—Improvements in petroleum engines.
7241. Diesel.—A process for producing motive work from the combustion of fuel.

NO.

7943. Sennett & Durie.—Improvements in the methods connected with the production of supply of steam and gases, and in the utilisation thereof in engines for producing motive power, and in the apparatus therefor.

8128. Hornsby & Edwards. Improvements in engines actuated by the explosion of combustible mixtures.

8401. Pollock.—Improvements in gas engines.

8538. Beugger.—Improvements in or applicable to gas and hydrocarbon engines.

8678. Johnson (Genty).—Improvements in furnace gas engines or aëro-thermic motors.

8733. Griffin.—Improvements in or in connection with heating the igniting apparatus of petroleum or other liquid hydrocarbon engines.

9121. Guillery.—An improved rotary motor, applicable also for use as a pump, ventilator. or the like.

9161. Robinson.—Improvements in gas or combustible vapour engines.

9439. Beugger.—Improvements in petroleum and gas motors.

9448. Ogle.—Improvements in the means for igniting the charges in the cylinders of explosion engines.

9674. Magee.—Improvements in gas motor engines.

10091. Seck.—Improvements in or connected with hydrocarbon motors.

10254. Hamilton.—Improvements in valve operating and governing mechanism of gas and oil motor engines.

10437. Holt.—An improvement in igniting apparatus for gas and oil motor engines.

11141. Weyman, Hitchcock, & Drake.—Improvements in hydrocarbon motors and in apparatus and appliances connected therewith.

11598. Thompson (O'Kelly).—Improvements in or relating to tramcars and in motors therefor.

11708. Hitchcock & Drake.—Improvements in oil engines and the like hydrocarbon motors.

11928. Webb.—Improvements in gas engines.

11936. Clerk.—Improvements in starting gear for gas and like engines.

11962. Hornsby, Edwards & Gibbon.—Improvements in engines actuated by the explosion or burning of combustible mixtures.

12165. Anderson.—Improvements in gas and oil motor engines.

12183. Boult (Charter).—Improvements in gas or similar engines.

13077. Davy.—Improvements in gas engines.

13088. Johnson (Hille).—Improved mixing valve for petroleum and like motors.

13117. Clerk.—An improved method of operating, and improvements in, gas or petroleum hammers, gas pumps, gas punching, riveting or cutting machines, in part applicable to gas or petroleum engines.

NO.

13204. Abel (Gas-Motoren-Fabrik Deutz).—Improvements in gas and oil motor engines.

13859. Binns.—Improvements in gas engines.

13939. Sayer.—A gas or similar motor for stationary or locomotive purposes.

14317. Von Oechelhauser & Junkers.—Improvements in and relating to gas engines.

14650. Hogg & Forbes.—Improvements in hydrocarbon engines.

14713. De Susini.—Improvements in motor engines worked by either vapour or other volatile fluids in combination with a gas motor engine for the utilisation of the waste heat thereof.

15247. Piers.—Improvements in gas engines.

15417. Weyman.—Improvements in and connected with petroleum and like engines.

16308. Maybach.—Improvements in the method of, and the apparatus for, effecting a continuous circulation and cooling of liquids employed in motors and compressors.

16339. Griffin.—Improvements in liquid hydrocarbon and other motor engines.

16365. Briggs & Sanborn.—An improved lubricating cup.

16379. Brünler.—Petroleum motor contrivance for pressing the petroleum into the gasificator by means of the air current introduced for the formation of the mixture.

16380. Brünler.—Improvements in rotating petroleum motors.

16381. Brünler.—Petroleum motor.

16382. Brünler.—Improvements in evaporating devices for cooling gas and petroleum motors, the cylinders and pistons of which are rotating round a stationary crank.

16413. Redfern (La Société Anonyme des Moteurs Thermiques Gardie).—Improvements in and connected with gas engines or motors.

16986. Whittaker.—Improvements in and connected with ignition tube for gas engines.

17277. Andrew, Bellamy & Garside.—Improvements in apparatus for governing the speed of gas, oil and other similar motor engines.

17391. Fairfax (Söhnlein).—Improvements in petroleum motors.

17427. Hartley & Kerr.—Improvements in compound engines, and in part applicable to other gas engines.

17632. Held.—Improvements in petroleum and like engines, applicable to fire extinguishing and other purposes.

17732. Paton.—Improvements in gas engines.

18020. Southall.—Improvements in gas and oil motor engines.

18109. Southall.—Improvements in gas and oil motor engines.

18118. Gilbert-Russell.—Improvements in explosion engines.

18513. Cock.—An improvement in gas engines.

NO.

18808. Stroch.—Improvements in or connected with petroleum or other hydrocarbon motors.

20088. Dowie & Handyside.—A gas engine governor gear.

20413. Ryland.—Improvements in explosion engines.

20660. Weyman & Ellis.—Improvements in utilising the heat taken up by the water employed for cooling the cylinders of gas, oil, or other hydrocarbon motors.

20683. Pinkney.—Improvements in gas engines.

20802. Andrew & Bellamy.—Improvements in gas, oil, and similar motor engines.

20803. Andrew & Bellamy.—Improvements in gas, oil, and similar motor engines.

21342. Priestman & Priestman.—Improved means for facilitating the starting of hydro-carburetted air engines.

21475. Enger.—Improvements in gas engines or motors.

21534. Altmann.—Improvements in and connected with spray apparatus for hydro-carburetted air engines.

21857. Winckler (Jastram).—An improved arrangement for feeding oil engines with oil in a duly regulated manner.

21858. Winckler (Jastram).—An improved reversing gear for a propeller worked by engine power, with a reversing counter-shaft revolving in an opposite direction to the main shaft.

21917. Wetter (Rademacher).—Process and apparatus for igniting the combustible charges or gas mixtures of gas and oil motors.

21952. Dürr.—Improvements in hydrocarbon engines.

22664. Stuart & Binney—Self-starting mechanism for hydrocarbon engines.

22797. Weyman, Hitchcock, & Drake.—Gear for transmitting and reversing the power given off by gas and oil motor engines.

23323. Knight.—Improvements in oil and gas engines.

23786. Roots.—Improvements in or connected with internal combustion engines.

23800. Sennett & Durie.—Improvements in the methods and means of cooling, heating, and lubricating cylinders, such as those of gas and steam engines, air compressors, and the like, and of equalising the motion of the piston therein.

24065. Best.—Improvements in gas engines and in their application to motor vehicles.

1893.

108. Fielding.—An improved double-cylinder gas or oil motor engine.

153. Wetter (Gerson & Sachse).—Method of varying the strength of the explosion charge or the ratio between the constituents of the gas and air mixture in gas engines.

NO.	
531.	Shuttleworth and others.—Improvements in furnace lamps for oil and gas engines.
608.	Sabatier and others.—Improvements in gas and petroleum engines.
735.	Abel (Gas-Motoren-Fabrik Deutz).—Improvements in gas and oil motor engines.
779.	Shiels.—Improvements in apparatus for automatically regulating the temperature of the water used in cooling the cylinders of gas and oil engines.
1070.	Dawson.—Improvements in gas engines.
1277.	Burt & McGhee.—Improvements in and relating to gas or explosive vapour motor engines.
2110.	Dixon.—An improvement or improvements in gas engines.
2523.	Mellin & Reid.—Apparatus for deodorising the exhaust of gas or oil motor engines.
2596.	Lanyon (Martin).—An improved hydrocarbon motor.
2788.	Evans.—Improvements in gas engines.
2851.	Bellamy.—Improvements in gas and similar motor engines.
2912.	Weyman.—Improvements in or connected with lamps and vaporisers for oil engines.
3332.	Hartley & Kerr.—Improvements in gas engines.
3401.	Davy.—Improvements in gas engines or other internal combustion engines.
3971.	Hartley & Kerr.—Improvements in compound gas and like engines.
4327.	Heys (Langensiepen).—A new or improved admission valve for gas or oil engines
4564.	Bellamy.—Improvements in gas and similar motor engines.
4696.	Davy.—Improvements in gas and other internal combustion engines.
5005.	Rollason.—A device for preventing the bursting of gas engine and other water-jacketed cylinders or pipes by the freezing of the water.
5256.	Lake (Backeljau).—Improvements in explosive gas actuated pump.
5456.	Trewhella.—Corrugated cylinders for internal combustion engines.
6093.	Bellamy.—Improvements in gas and similar motor engines.
6204.	Sayer.—Improvements in explosive and pressure elastic and non-elastic turbine engines.
6453.	Okes.—Improvements in internal combustion engines.
6534.	Berk.—Improvements in or connected with gas and oil engines.
7023.	Owen.—Improvements in or in connection with self-generating vapour burners, or apparatus for vaporising liquid hydrocarbons for heating, lighting, or other purposes.
7064.	Bellamy.—Improvements in gas and similar motor engines.
7292.	Walker.—Exhaust scrubber for petroleum and other motors having offensive or injurious exhaust.
7426.	Dawson.—Improvements in gas engines.

NO.

7433. List and others.—Improvements in and connected with what are commonly known as petroleum or oil engines.

7466. Burt.—Improvements in variable speed and reversing mechanism for gas or vapour or other motors.

8095. Morcom.—Improvements in working motive power engines, and in apparatus actuated by combustible gases to be employed for that purpose, and for other purposes.

8158. Lindahl.—Improvements in or relating to admission valves for petroleum or similar motors.

8409. Wilkinson.—Improvements in and relating to gas, oil, and like power motors.

8639. Drake.—Improvements in hydrocarbon engines.

8864. Robinson, A. E. & H.—Improvements in oil or gas engines.

8967. Crouan.—Improvements in gas and other motive power engines.

9181. Abel (Gas-Motoren-Fabrik Deutz).—Improvements in gas and oil motor engines.

9216. Okes.—Improvements in internal combustion engines.

9549. Brückert & Delattre.—Improvements in rotary motors applicable also as pumps.

9618. Roots.—Improvements in internal combustion engines.

10240. Gessner.—Improvements in steam and other engines and pumps.

10274. Abel (Gas-Motoren-Fabrik Deutz).—Improvements in valve gear for gas and petroleum motor engines.

10310. Hartley & Kerr.—Improvements in gas and like engines.

10801. Peebles.—Improvements in or connected with gas or vapour motors.

12330. Grove.—Improvements in heating lamps applicable to hydrocarbon engines, and apparatus therefor.

12388. List and others.—Improvements in what are commonly known as petroleum or oil engines.

12427. Dougill.—Improvements in gas and explosive vapour motors.

12600. Drysdale.—Improvements in valves and atomising apparatus for hydrocarbon engines.

12732. Morgan.—Improvements in combustible vapour engines, and in their accessories.

12843. Priestman, W. D. & S.—Improvements in or applicable to internal combustion engines.

12917. Pullen.—An improved oil, spirit, gas, or steam motor.

13282. Furneaux & Butler.—Improvements in starting apparatus for gas and other motors.

13518. Fiddes, A. & F. A.—Improvements in gas and vapour motor engines and the like.

14212. Smethurst and others.—Improvements in methods of, and apparatus for, applying combustible mixtures of air and gas or inflammable vapour to driving motive power engines.

NO.

14454. Bickerton.—Improvements in starting apparatus for gas engines.

14546. Boult (The C.D.M. Niel).—Improvements in or relating to automatic starting gear for motors operated by explosion.

14558. Hornsby & Edwards.—Improvements in engines operated by the explosion of mixtures of combustible vapour or gas and air.

14572. Thompson (Dürr).—New or improved vaporisers for petroleum motors.

14891. Boult (La S. F. des M. C.).—Improvements in or relating to petroleum, gas, or oil engines.

15199. Campbell.—Improvements in oil and gas motor engines.

15359. Bellamy.—Improvements in travelling cranes.

15405. Fryer.—Improvements in valve gear for the 'Clerk' and like type of gas engine in which a separate air and gas pump is employed.

15900. Boult (Brauer & Windnitz).—Improvements in rotary engines and pumps.

15947. Simms.—Improvements in or connected with whistles or the like for explosion engines.

16072. Maybach.—Improvements in the method of producing the explosive mixture in hydrocarbon engines.

16079. Tipping.—Improvements in rotary pumps, blowers, and engines, also applicable for measuring fluids.

16290. Qurin.—Adjustable cam.

16410. Spiel & Spiel.—Improvements in hydrocarbon engines.

16575. Drake.—Improvements in the vaporisers and ignition tubes of oil engines.

16751. Brünler.—Device in gas or petroleum engines with slow combustion for insuring the maintenance of the combustion.

16752. Brünler.—Process for insuring the commencement of the ignition in gas and petroleum engines.

16900. Crossley & Atkinson.—Improvements in internal combustion engines.

16985. Maybach.—Improvements in the method of igniting the explosive mixture of hydrocarbons.

17784. Shuttleworth and others.—Improvements in and for connecting together lamps and vaporisers.

18152 Sherrin & Garner.—Improvements in cylinders and pistons for gas and other heat engines.

20007. Ryland.—Improvements in explosive engines.

20808. Priestman, W. D. & S.—Improved means applicable for use in mixing liquids with gases in the manufacture of vapour.

21120. Hamilton.—Improvements in gas motor engines.

21775. Brünler.—Process for obtaining a compression in gas and petroleum engines with slow combustion.

21908. Barclay.—Improvements in and relating to sight-feed lubricators.

22181. Roots.—Improvements in internal combustion engines.

22753. Pinkney.—Improvements in internal combustion engines.

NO.
23075. Crossley & Atkinson.—Improvements in gas or internal combustion engines.
23175. Stoke.—Outlet valve motion for gas and petroleum engines.
23379. Wattles.—Improvements in gas engines.
23571. Roots.—Improvements in internal combustion engines.
23735. Sintz and others.—Improvements in gas and other explosive engines.
24258. Durand.—Improvements in or relating to explosion engines.
24384. Hamilton.—Improvements in gas motor engines.
24584. Crossley & Hulley.—Improvements in internal combustion oil engines.
24612. Sitton.—Improvements in oil engines.
24666. Campbell.—Improvements in gas motor engines.

1894.

263. Lindemann.—Improvements in gas or petroleum motors.
408. Abel (The Gas-Motoren-Fabrik Deutz).—Improvements in gas and oil motor engines.
573. Dulier.—A method of and apparatus for generating elastic fluid for working engines.
752. Lake (Die Firma Fried. Krupp).—Improvements relating to distributing and igniting devices for gas, petroleum, and like engines.
778. Campbell.—Improvements in oil and gas motor engines.
1121. Meacock.—Improvements in engine starters.
1581. Bénier.—Improvements in and relating to gas engines.
2064. Foster.—Improvements in gas and other internal combustion engines.
2540. Fidler.—The utilisation of exhaust heat from gas, oil, tar, or spirit engines.
2593. Lake (Grant).—Improvements in gas engines.
2656. Bellamy.—Improvements in gas and similar motor engines.
3122. Weyland.—Improvements in vaporisers for petroleum motors.
3303. Décombe and Lamena.—Improvements in actuating or operating the valves of steam and other motive power engines.
3485. Davy.—Improvements in gas and other internal combustion engines.
4301. Holt.—A method of working valves of gas and oil motors, and apparatus for that purpose.
4312. A. & F. A. Fiddes.—Improvements in or connected with internal combustion motors.
4959. Singer.—Improvements in gas engine valves.
4960. Singer.—Improvements in double acting compression gas engines or oil engines.
5218. Rollason.—Improvements in the governing and construction of gas engines.
5493. Southall.—Improvements in gas and oil motor engines.
5577. Capitaine.—An improved petroleum motor.

NO.

5680. Brünler.—Device for injecting the petroleum in four-stroke petroleum engines with two air inlet valves.

5681. Mitchelmore.—Improvements in hydrocarbon engines.

5843. Thomson, Yates, J. P. Binns, & H. G. Binns.—Improvements in gas and oil engines.

6122. Hornsby & Edwards.—Improvements in explosion engines.

6138. Reid (Brayton).—Improvements in oil and gas engines.

6364. Adams.—Improvements in gas, oil, and steam engines.

6647. Eaton.—An improved combined steam and gas generator and engine.

6755. Low.—Improvements in gas engines.

7023. Skene.—Improvements in gas and oil vapour engines.

7294. Farmer.—Improvements in gas and like engines.

7357. Schwarz.—A new or improved explosion engine.

7485. Merryweather & Jakeman.—Improvements in motor engines to be worked with gas or vapour such as petroleum vapour.

7538. Roots.—Improvements in oil engines.

7542. Wolfmüller and Geisenhof (amended).—Improvements in and relating to motor-propelled velocipedes.

7630. Butter.—Improvements in means for operating and controlling the valves of steam, gas, or oil engines.

8041. Adams.—Improvements in exploding chambers or receptacles, and apparatus connected therewith, for oil, gas, or similar engines, motors, or pumps.

8295. Holt.—Improvements in gas motor or oil motor cars.

8668. Hogg & Grove.—Improvements in oil or gas engines.

9305. Dickinson.—Improvements in or relating to gas or vapour engines.

9403. Scott.—Improvements in pumps for oil engines or other purposes.

9723. Sondermann.—Improvements in and connected with the cylinders of engines, motors, and compressers.

9788. Brünler.—Improvements in petroleum engines.

9889. J., S., F., & E. Carter.—Improvements in and connected with petroleum oil engines.

10034. Haddan (Piguet & Company).—An improved method of and apparatus for obtaining motive power by means of explosions.

10113. Holt.—Improvements in gas motor engines.

10451. Piers.—Improvements in or connected with locomotive engines, or other engines subject to intermittent work or varying loads, &c.

10452. Piers.—Improvements in or connected with locomotive engines, or other engines subject to intermittent work or varying loads, &c.

10511. Thompson (Schoenner).—Improvements in toy motors.

10623. Gibbon.—Improvements in petroleum or hydrocarbon engines.

10788. Henriod-Schweizer.—Improvements in gas and hydrocarbon engines or motors.

11101. Howard, Bousfield & Bastin.—Improvements in explosion engines.

NO.

11108. Davis.—Improved starting device for gas and hydrocarbon engines.

11119. Lazar, Banki, & Csonka.—A new or improved mixing chamber for petroleum and similar engines.

11261. Hamilton.—Improvements in oil engines.

11369. Weisman & Holroyd (amended).—Improvements in hydrocarbon motors.

11526. Redfern (Nordenfelt & Christophe).—An improved explosion engine, also adapted to be driven by steam.

11593. Haddan (Pons y Cūret).—Improvements in or relating to the construction of pistons and their packings.

11726. Lamena.—A vapour spring, and improvements in connection with the utilisation of the same.

11802. Dawson.—Improvements in gas engines.

11804. Ganswindt.—Improvements in mechanism for producing rotatory motion from reciprocating motion.

11997. Fielding.—Improvements in explosive engines.

12520. Ewins.—A piston for engines.

12820. Tyler & De Vesian.—Improvements in apparatus for mixing and burning inflammable and explosive gases and vapours.

12840. Terry.—Improvements in apparatus for cooling circulating water in gas and oil and other engines working by explosion, &c.

12917. Boult (Lausmann).—Improvements in or relating to reversing gear for steam and other motors.

13298. Griffin.—Improvements in gas and oil motor engines.

13333. Marks (Hirsch).—Improvements in gas engines.

13524. Vermersch.—Improvements in gas engines.

13546. Burt.—Improvements in apparatus or arrangements for transmitting and controlling the power of gas or vapour or other motors.

13825. Arschauloff.—Improvements in caloric engines.

13996. Thompson (De Palacios & Goetjes).—Improvements in the art of aërostation and apparatus therefor.

14002. Holt.—Improvements in gas motor cars.

14476. Bryant.—A new or improved vapour or gas motor engine.

15061. Schumacher, Pickering, Whittam, & Platts.—Improvements in or relating to hydraulic and other engines.

15109. Schimming.—Improvements in or relating to gas and similar motors.

15152. Faure.—Improvements in the propulsion and construction of velocipedes and other vehicles.

15272. Weyman.—Improvements in oil or hydrocarbon engines.

15721. W. D. & S. Priestman.—Improvements in hydrocarbon engines.

16230. Saurer-Hauser.—Improvements in heating and igniting devices for gas engines.

17233. Knight.—Improvements in oil or hydrocarbon engines.

17308. Roots.—Improvements in internal combustion engines.

NO.

17549. Maccallum.—Improvements in internal combustion engines.

18443. Terry.—Improvements relating to the use of liquid fuel, and apparatus for that purpose.

18452. Bedson & Hamilton.—Improvements applicable to oil engines.

19894. Harris.—Improvements in high-speed gas engines.

20123. Shillito (The Leipziger Dampfmaschinen- und Motoren-Fabrik).—An improved gas and petroleum motor.

20192. Grove & Hogg.—Improvements in hydrocarbon engines.

20538. Norris & Henty.—Improvements in hot air engines.

21032. Duke.—Improvements in the means for automatically lighting gas.

21829. Abel (The Gas-Motoren-Fabrik Deutz).—Improved method of and apparatus for working gas or oil motor engines operating with slow combustion.

22852. Armstrong.—Hand starting gear for gas, oil, and other internal combustion engines.

22891. Turner.—Disengaging starting handle for gas and oil engines and other motors that are not self-starting.

22946. Clerk & Lanchester.—Improvements in gas and like engines.

23028. Robinson.—Improvements in gas and vapour engines.

23802. Pollock & Whyte.—Improvements in oil engines.

24089. Marks (Hirsch).—Improvements in gas engines.

24133. Heys (Letombe).—Improvements in gas and similar engines.

24239. Withers.—An improved gas engine.

24898. Hawkins.—An improved explosive for producing motive power, and apparatus to be used in connection therewith

24949. Lindley.—Improvements in and connected with fluid-pressure motors.

25275. I. & T. W. Cordingley.—Improvements in apparatus for igniting the gases in gas engines and the like.

25334. Goddard.—Improvements in threshing machines.

1895.

347. Humphrey.—Improvements in gas or oil motor engines.

546. Niemczik.—Ignition- and gas-generating-body for explosive engines rendered incandescent by an electric current.

644. Pinkney.—Improvements in internal combustion engines.

749. Karavodin.—Improvements in fluid-pressure heat engines.

946. Marks (Hirsch).—Improvements in gas engines.

973. Wane & Horsey.—Improved arrangement of appliances connected with internal combustion engines.

1046. Lones.—Improvements in gas steam and compressed-air engines.

1071. Boult (Karger).—Improvements in or relating to the cylinders of heat engines.

1310. Halling & Lindahl.—Improvements in or relating to apparatus for controlling the valves of engines.

NO.	
1580.	Millet.—Improvements in velocipedes.
1623.	Piers.—Improvements in connection with motive power engines for driving tramway cars and other vehicles.
1884.	Serret.—Improvements in apparatus for diminishing the noise of gases escaping from the exhaust of gas engines and the like.
1922.	Niemczik.—Arrangement for starting gas and petroleum engines.
2327.	Clarke.—Improvements in gas and oil motor valve motion.
2550.	Crastin.—Improvements in or applicable to gas engines.
2565.	Ferranti.—Improvements in steam, hot-air, and other engines.
2594.	Pennink.—A new or improved high and low pressure gas generator.
2638.	James.—Improvements in or appertaining to gas and oil engines.
2890.	Clerk.—Improvements in pneumatic-pressure power hammers.
3357.	Stanley.—Improvements in and relating to explosion engines.
3638.	Crossley.—Improvements in internal combustion oil engines.
3783.	Warner & Rackham.—Improvements in gas motor engines.
3806.	Collis.—Improvements in oil, gas, or vapour engines.
3923.	Wallmann.—Improvements in petroleum and gas motors.
4116.	J. P. & H. G. Binns.—Improvements in gas and oil engines.
4243.	Diesel.—Improvements in regulating fuel supply for slow combustion motors, and apparatus for that purpose.
4604.	Furneaux & Butler.—Improvements in or relating to apparatus for starting hydrocarbon and like motor engines.
4786.	Tangyes Limited & Robson.—Improvements in internal combustion engines.
4972.	Kolbe.—Improvements in fluid-pressure heat engines.
5373.	Johnson (Tower).—Improvements in vehicle motors.
6151.	Wildt.—An improved gas engine.
6383.	Southall.—Improvements in gas and oil motor engines.
6523.	The Brayton Petroleum Motor Co. Ld. & Townsend.—Improvements in governing apparatus for engines.
6800.	Mackenzie (Crouan).—Improvements in gas engines and the like.
6972.	Donaldson.—Improvements in gas motors.
6974.	Southwell.—Improvements in explosion engines.
7197.	Weatherley.—Improvements in petroleum engines.
7747.	Weatherley.—Improvements in petroleum engines.
8120.	Merichenski & Moffat.—A new or improved apparatus for the production of gas from oil.
8197.	Turner & Harding.—A combined exhaust silencer and circulating pump for gas engines.
8355.	Klunzinger.—Ignition apparatus for gas and oil engines.
8815.	Kolbe.—An improved method and means for transmitting or converting power or movement, &c.
8817.	Kolbe. Improvements in or connected with fluid-pressure heat engines.

NO.

9038. Melhuish.—Improvements in and connected with internal combustion engines.

9188. Fraser.—System or process of heat regeneration and gas manufacture for internal combustion engines.

9922. Berrenberg & Krauss.—Improvements in wheel motors for cycles and other similar vehicles.

9964. Mex.—Improvements in and relating to petroleum motors.

10245. Williams.—Improvements in blow-lamps.

10621. Pool.—Improvements in oil engines.

10710. Bell & Clerk.—Improvements in hydrocarbon motors.

10758. Abel (The Gas-Motoren-Fabrik Deutz).—A combined locomotive gas engine with car.

11282. Howard & Bousfield.—Improvements in or connected with explosion engines.

11400. Duryea.—Improvements in or relating to motor vehicles.

11493. Green.—Improvements in gas motor engines.

11709. Hewitt.—Improvements in steam, air, and gas rotary engines, and in exhaust and compression pumps.

11925. Melhuish & Beaumont.—An improved high speed gas or hydrocarbon engine.

11955. Atkinson.—Improvements in internal combustion engines.

12095. Holt.—Improvements in valve gear for gas or oil motor engines.

12097. Dawson.—Improvements in oil engines.

12131. Pennink.—Improvements in or relating to high and low pressure gas generators.

12287. Brayton Petroleum Motor Co. Ld. & Withers.—Improvements in petroleum and like engines.

12306. Diesel.—Improvements in direct combustion motor engines working with multiple compression of the air required for combustion.

12409. Macdonald.—Improvements in motors, especially applicable to tramways.

13047. Compagnon & Guibert.—Improvements in gas or petroleum motors.

13675. Lorenz.—Improvements in and relating to upright or vertical petroleum motors.

13975. Spiel.—An improved combined vaporiser and igniter for oil motors.

14009. Spiel.—Improvements in and connected with the vaporising and igniting devices of gas, petroleum, and similar motors.

14076. Durand.—Improvements in and connected with the inlet valves of petroleum-motors.

14242. Ladd.—Improvements relating to explosion engines and to gas generators to be used in connection therewith.

14361. Lorenz.—Improvements in and relating to hydrocarbon engines working in a four-stroke cycle.

14385. Dürr.—Improvements in gas and oil engines.

NO.

15045. Lanchester.—Improvements in gas and oil motor engines.

15310. A. & F. Shuttleworth & Deed.—Improved means for igniting the combustible charges in gas, oil, and like engines.

15411. Hinchliffe.—Improvements in and connected with vaporisers of oil and other similar engines.

15514. Day.—Improvements in oil engines.

15694. Clubbe & Southey.—Improvements in locomotive carriages for common roads.

16068. Smith.—Improvements in connection with the propulsion of road or other vehicles.

16079. Briggs.—Improvements in gas and oil engines or motors.

16096. Grist.—Improvements in apparatus for vaporising hydrocarbons or other volatile liquids, and mixing the vapour with air for use in motors.

16157. Clubbe & Southey.—Improvements in internal combustion engines.

16362. Roger.—Improvements in self-propelling vehicles.

16556. Gass.—Improvements in gas engines.

16609. Campbell.—Improvements in gas and oil motor engines.

16703. Weatherhogg.—Improvements in petroleum and similar engines.

16891. White & Middleton.—Improvements in and relating to gas engines.

17282. Prince.—Improvements in means for propelling vehicles by internal combustion motors.

17315. Duncan, Suberbie, & Michaux. — Improvements in petroleum motors adapted for propelling vehicles and for other purposes.

17560. Hoyle.—A new furnace-gas or heat motor.

18070. Norris & Henty.—Improvements in valve gears for gas, oil, or other engines.

18379. Johnston.—Improvements in gas and petroleum engines.

18706. R. D., W. D., & H. C. Cundall.—Improvements in oil motor engines.

18794. Turnock.—Inprovements in and connected with means for supplying and utilising compressed air for motive power and other purposes.

18908. Lanchester.—Improvements in gas and oil motor engines.

18995. Southall.—Improvements in operating the valves of gas and oil engines.

19142. Grove.—Improvements in oil or gas engines.

19162. Bethell.—An improved plough.

19267. Gans.—An improved lighting apparatus for explosive gas mixtures, more especially for motors.

19391. Cumming.—Improvements in refrigerating machinery.

19568. Brünler.—Improvements in explosion engines.

19700. Gautier & Wehrlé.—Improvements in rotary engines and pumps.

19734. De Dion & Bouton.—Improved means or apparatus for electrically igniting and governing petroleum and other like motors.

NO.

19735. De Dion & Bouton.—Improvements in motors worked by explosive mixtures.

19744. Barker—Improvements in or connected with vaporisers for oil engines.

19980. Delahaye.—Improvements in motors worked by petroleum or other liquid hydrocarbon.

20189. Johnston.—Regulating or adjusting the transmission of power and speed of prime movers.

20305. Kane.—Improvements in gas and like engines, and in the method of mixing and volatilising the gases in the same.

20411. Erben.—Improvements relating to mechanically propelled vehicles.

20666. Nunn. —A gas or oil motor mowing machine.

20703. Lister.—Improvements in gas and like motor engines.

20705. Bickerton.—Improvements in gas engines.

20914. Boult (La Société Française des Cycles Gladiator).—Improvements in or relating to motor vehicles.

21315. Allen & Barker.—Improvements in oil and gas engines.

21484. Enger.—An improved method of and apparatus for governing or regulating motors.

21521. Pinckney.—Improvements in and connected with generating steam and furnace gases, and for utilising the same for motive purposes.

21568. Conrad.—Improvements in or relating to explosion engines.

21574. Fessard.—Improvements in gas and oil engines.

21594. Green.—Improvements in means for starting explosion engines.

21774. Magee.—Improvements in and relating to gas engines.

21912. White.—Improvements in and connected with governors for gas and oil engines.

21993. Washburn.—Improvements in combined motive power and electric generating and storing apparatus for the propulsion of movable conveyances and analogous power purposes.

22161. Prestwick & The Protector Lamp and Lighting Co., Ld.—Improvements in velocipedes and other vehicles.

22347. Clubbe & Southey.—Improvements in engines for the propulsion of road carriages.

22402. De Dion & Bouton.—Improvements in motors worked by explosive mixtures.

22523. Heeley, Graves, & Coates.—An apparatus for the immediate stoppage of gas or steam engines from any room of the works or factory.

22690. Marks.—Improvements in gas, oil, and like engines.

22793. Rowbotham.—Improvements in and relating to motor engines, for vehicles and launch propulsion in particular.

23113. Wise (Buckeye Manufacturing Co.).—Improvements in gas engines.

23412. Tenting.—Improvements in self-propelling or horseless vehicles, and in petroleum motors employed for driving the same.

NO.

23417. De Sales.—Improvements in gas and other like engines.

23706. Boult (La Société Française des Cycles Gladiator).—Improvements in or relating to motor vehicles.

23740. Thompson & Webb.—A rotary gas or oil motor for driving tricyles or other light vehicles.

23771. Pennington.—Improvements in self-propelling road vehicles.

23879. Warsop.—Improvements in oil engines and the like.

24101. Cooper.—Improvements in driving gear for locomotive carriages.

24235. Brindley, Naylor, & Wilson.—Improvements in or in and relating to self-propelled road vehicles.

24411. Wordsworth, Wiseman, & Holroyd.—Improvements in motors worked by hydrocarbon or other gases, and in means for controlling same.

24792. Rogers.—Improvements in gas and explosive vapour engines.

25024. Livingston.—Improvement in engine stops.

25050. Pennington.—Improvements in and relating to aërial vessels and to methods of propelling and controlling the same.

1896.

313. Gautier.—Improvements in petroleum motors and the like.

624. New.—Improvements in gas and oil engines.

731. Hamilton & Rollason.—Improvements in self-propelled vehicles.

786. Smith.—Improvements in gas and oil engines, part of the same being applicable to steam engines and the like.

795. Abel (The Gas-Motoren-Fabrik Deutz).—Means for cooling the inlet vavle of gas and oil motor engines.

884. Capitaine.—An improved mode and mechanism for regulation of the temperature of the combustion chamber and vaporiser in petroleum motors.

996. Pennington.—Improvements in explosion engines.

1095. Beverley.—Improvements in hydrocarbon and petroleum engines.

1327. Dougill & Marks.—Improvements in governing-apparatus for engines in which gas or vapour and air are used.

1404. Maxim.—Improvements in the conversion of heat energy into mechanical energy, and in apparatus therefor.

1789. Söhnlein.—Improvements in oil, gas, and other motive power engines.

2024. Crowden.—Improvements in or relating to explosion motors.

2113. Howard & Bousfield.—Improvements in gear for transmitting rotary motion.

2138. Roots.—Improvements in internal combustion engines.

2171. Lewis.—Improvements in gas and other such like engine cylinders, and in the mode and means for keeping such cylinders from becoming unduly hot.

NO.	
2290.	Lane.—Improvements in gas or petroleum engines, especially applicable to such engines when used for propulsion of vehicles, &c.
2394.	Sturmey.—Improvements in or relating to velocipedes and other vehicles, and self-contained motors therefor.
2436.	Maxim.—Improvements in process and in means or apparatus for producing motive power from combustible liquids, gases or vapours.
2753.	Bamford & Wadsworth.—Improvements in gas engines, in part applicable to oil and similar engines.
2874.	Marchant.—Pumps driven by vaporised oil motors.
2895.	Crossley & Atkinson.—Improvements in igniting apparatus for internal combustion motors.
3062.	Taylor.—Improvements in oil vaporisers.
3217.	Abel (The Gas-Motoren-Fabrik Deutz).—Improvements in upright gas and oil motor engines.
3331.	Reynolds & Astley.—An improved automatic feed for supplying oil or other liquids in regulated quantities for burning, lubricating, or other purposes.
3381.	Baker.—Improvements in or relating to explosion engines.
3503.	A. & F. Shuttleworth & Deed.—Improvements in the igniting arrangements of gas and hydrocarbon engines.
3696.	W. B. & C. S. Brough.—Improvements in motive power engines actuated by the explosive force of gases or vapours.
3798.	Carpenter & Allen.—Improvements in cultivators.
4067.	Burne.—Improvements in motive power engines actuated by the explosive force of gases or vapours.
4069.	Clubbe & Southey.—An electric vaporiser for oil engines.
4153.	Bromhead (Niel).—A double-acting gas engine.
4184.	Rowbotham.—Improvements in gas and like engines, and in the method of mixing and volatilising the gases in the same.
4245.	Holt.—Improvements in gas or oil traction cars.
4492.	Martineau.—Improvements in internal combustion engines.
4618.	Mallet.—Improvements in petroleum and like motors.
4634.	Crow.—Improvements in gas, petroleum, and other internal combustion engines.
4766.	Alston.—Improvements in and relating to compound gas engines.
4924.	Simpson.—Improvements in gas and other hydrocarbon engines.
4938.	Wenham.—Improvements in engines worked by combustible gases or vapours, more especially intended for propelling vehicles.
5277.	Donaldson.—Improvements in the gas control of an explosive gas motor.
5598.	Thompson.—Improvements in or relating to apparatus applicable for braking and starting oil, gas, and other engines, also machinery, tramcars, and other vehicles.
5814.	Lanchester.—Improvements in gas and oil motors.

NO.
5860. Ledin.—Improvements in and relating to motors actuated by products of combustion mixed with steam.
6067. Briggs.—Improvements in or connected with gas and oil engines or motors and carriages propelled thereby.
6073. Cook.—Improvements in and connected with means for generating combustion products under pressure, and utilising the same for operating heat engines and for propelling ships.
6378. Adorjan.—Improved valve motion and engine for highly superheated steam or gas.
6573. Dowsing & Keating.—An improvement in engines worked by gas or combustible vapour.
6590. Hall.—Improvements in or relating to variable speed apparatus for transmitting power.
6718. Prince.—Improvements in and connected with internal combustion motors.
6738. W. D. & S. Priestman & Richardson.—Improved means applicable for use in igniting the working charge in hydrocarburetted-air engines.
6740. Ibbett.—Improvements in gas, oil, or hydrocarbon vapour engines.
6834. Gascoine & Courtois.—Improvements in horseless carriages.
6872. Pinkert.—New or improved motor for propelling and manœuvring vessels.
6915. Hilderbrand.—Improvements in or relating to motor cycles and the like
6933. Hornsby, Edwards, Roberts, & Young.—Improvements in explosion engines.
6974. J. S., R. D., W. D., & H. C. Cundall.—Improvements in motor engines operated by oil, gas, and other explosive matter.
7036. Duryea.—Improvements in or relating to gas and like motors.
7147. Auriol.—Improvements in gas and oil engines.
7250. Bousfield (La Société des Procédés Desgoffe et de Georges).—Improvements in centrifugal pumps and motors.
7454. Berrenberg.—Improvements in the construction of motor engines, and their application in the propulsion of autocars and road-carriages.
7543. Best.—Improvements in petroleum engines.
7549. Pennington.—Improvements in starting devices for motors.
7566. Rüb.—Improvements in motor-driven velocipedes.
7603. Lanchester.—Improvements in gas and other motive power engines.
7609. Tavernier.—A new or improved motor actuated by explosions.
7822. Bickerton.—Improvements in oil engines.
7825. Clark.—Improvements in apparatus for compressing air.
7940. Simms (Maybach).—Improvements in or in connection with petroleum burners for heating purposes.
8089. Seck.—Improved outlet-valve motion for gas and oil engines.

NO.

8255. Dale.—Improvements in mechanical motors driven by steam, compressed air, mixtures of gas and air, petroleum and air, or other explosive mixtures.

8306. Bollée.—Improvements in or relating to self-propelled vehicles.

8359. MacDonald.—Improvements in and connected with motor power apparatus for propelling vehicles and boats.

8813. Bickerton.—Improvements in gas and oil engines.

8918. Young (Gardner).—Improvements in explosion engines.

9052. Loyal.—Improvements in petroleum and like motors.

9092. Tubb & Mondey.—Improvements in and relating to oil, gas, and vapour engines.

9143. Carse.—Improvements relating to motor-driven vehicles.

9199. McGhee.—Improvements in the valves and valve gear of gas or internal combustion motor engines.

9256. Petter.—Improvements in or relating to the arrangements of the air and exhaust valves of internal combustion engines.

9259. Boult (Landry & Beyroux).—Improvements in or relating to explosion engines.

9336. De Dion & Bouton.—Improvements in explosion motors.

9337. De Dion & Bouton.—Improvements in the valvular arrangement of petroleum and like engines.

9526. Maxim.—Improvements in and relating to oil and gas engines.

9571. De Chasseloup-Laubat.—Improvements in steam, gas, and other engines.

9732. De Dion & Bouton.—Improvement in or connected with explosion motors.

9770. Hockett.—Gas engine.

9982. Lane.—Improvements in gas, oil, or other internal combustion engines or motors.

10018. Lane.—Improvements in or connected with motive power apparatus consuming liquid fuel, such as petroleum and heavy oils.

10141. Mors.—Improvements in and relating to self-propelled vehicles.

10164. Duncan.—Improvements in and relating to the driving of light vehicles.

10307. J. P. & H. G. Binns.—Improvements in gas and oil engines.

10399. Bennett & Thomas.—Improvements in gas, oil, and spirit engines.

10424. Simms.—Improvements in cooling the surfaces of the cylinders of explosively driven engines by means of air.

10690. Tangyes Ld. & Robson.—New or improved mechanism for reversing and stopping oil, gas, or other motors driven by machinery or apparatus.

11058. Clubbe, Southey, & the Electric Motive Power Co., Ld.—Improvements in motor cars or autocars, applicable also to launches.

11078. Peugeot.—Improvements in oil engines.

11088. Gans.—Improvements relating to igniters for the motors of automotive vehicles and feed vessels therefor.

NO.	
11209.	Bomborn.—Improvements in vaporisers for petroleum engines.
11307.	Day.—Improvements in and connected with gas and oil engines.
11342.	Faure.—Improvements in or connected with motor-driven road vehicles.
11347.	Wiseman & Holroyd.—Improvements in hydrocarbon motors.
11351.	Hayward.—Improvements in rotary engines.
11414.	Barker.—Improvements in fog or audible signalling apparatus for lighthouses and the like.
11475.	Longuemare.—Improvements in burners for petroleum and other vapours.
11481.	Tomlinson.—Improvements in the driving of machinery, vehicles, boats, and the like, by electro-motors or other high-speed motors.
11491.	Holden.—Improvements in the construction of internal combustion engines for propelling carriages, cycles, and boats.
11506.	Magee.—Improvements in and connected with railway vehicles and road vehicles driven by means of oil motors.
11549.	Hamerschlag.—Improvements in igniting devices for gas and petroleum engines.
11573.	Haddan (De Coninck).—Improvements in and relating to automotive vehicles.
11914.	Lutzmann.—Improvements in and connected with motor-propelled vehicles.
11992.	Polke.—Improved cam mechanism.
12003.	Abel (The Gas-Motoren-Fabrik Deutz).—Appliance employed in starting gas and oil motor engines.
12041.	Smith.—Improvements in road motor cars and in machinery for the same.
12274.	Hunter.—Improvements in internal combustion motors for use in the propulsion of automobile vehicles and water craft and for general purposes.
12337.	British Motor Syndicate, Ld. (Maybach).—Improvements in portable engines.
12446.	J., S., F., & E. Carter.—Improvements in explosion engines.
12539.	Paget.—Improvements in and connected with fly-wheels for motor-cars.
12633.	J. A. & W. Drake.—Improvements in oil or gas engines.
12758.	Crouan.—Improvements in motive power engines driven by gas or inflammable vapour.
12776.	Hilderbrand.—An improved carburettor or gas-producer.
12805.	Altham.—Improvements in oil engines.
12943.	Rowbotham.—Improvements in gas-generating apparatus for explosion engines.
13833.	Young (Gardner).—Improvements in and relating to igniters for explosion engines or motors.

NO.

13864. Audin.—Improvements in gas or petroleum engines.

14212. Wood.—Improvements in explosion engines.

14213. Peugeot.—A new system of air carburettor.

14375. W. & C. S. Gowlland.—Improvements in and connected with means for the utilisation of acetylene gas in motors and ordnance, and for producing explosions and for other purposes.

14446. W. & C. S. Gowlland.—Improvements in or relating to fluid-pressure motors.

14639. Dowsing.—Improvements in apparatus or the production of electricity from the waste heat of gas, steam, or other heat engines.

14731. Wilson.—Improvements in the vaporising and igniting devices of petroleum engines.

14756. Roots.—Improvements in or connected with oil engines for propelling carriages, boats, and the like.

14829. Rowbotham.—Improvements in vaporising arrangements for oil or inflammable vapour engines.

14959. Merrit & Naismith.—Improvements in internal combustion engines.

15045. Baker.—Improvements in gas or vapour engines.

15127. Melhuish.—Improvements in and relating to the construction and arrangement of gear for regulating or automatically controlling the speed and power of internal combustion engines, &c.

15197. Heys (Heilmann).—Improvements in oil and gas engines.

15267. Stilwell.—Improvements in engines operated by gas, vapour, oil, or the like.

15279. Rowbotham.—Improvements in vaporising apparatus for explosion engines.

15752. Gowlland.—Improved method of obtaining motive power from gaseous pressure, and apparatus therefor.

16067. Banks.—Improvements in oil motors, specially applicable to cycles.

16277A. Pratis & Marengo.—The utilisation of hydrogen gas for the obtainment of light, heat, and power.

16348. Gordon.—Improvements in ignition apparatus for explosive engines.

16366. G. G. & R. O. Blakey.—Improvements in gas and other explosive engines.

16465. Bollée.—Improvements in or relating to motor or self-propelled road vehicles.

16512. Singer.—Improvements in internal combustion or detonating engines.

16630. Bectz.—Improvements in rotary explosion engines or motors.

16660. Bennett & Thomas.—Improvements in oil and spirit engines.

16708. Hunt.—Improvements in regulating apparatus for gas motor engines.

16997. Lacasse.—New or improved horseless carriage.

17203 Gale & Thompson.—Improvements in methods and means for electric regulation of power.

17221. Gautier & Wehrlé.—Improvements in and relating to motor vehicles.

NO.

17448. Jahn.—Improved starting apparatus for gas engines and the like.

17573. Pennington.—Improvements in or relating to the ignition of the charge in explosion, oil, and like engines.

17926. Reynolds.—An improved explosion motor for cycles, vehicles, and vessels.

18051. Holt.—Improvements in gas or oil motor tramcars and similar vehicles.

18194. Golby (Rumpf.).—Improvements in hydrocarbon motors.

18202. Huskisson.—Improvements in and relating to rotary turbine engines.

18294. Abel (The Gas-Motoren-Fabrik Deutz).—Method for starting gas and oil motor engines with twin cylinders.

18304. Bromhead (Neil).—A double-acting or duplex oil engine.

18520. Dunkley.—Improvements in motor carriages.

18551. Clubbe, Southey, & the Electric Motive Power Co. Ld.—Improvements in and relating to the suspension or supporting of engines on motor carriages.

18585. Arrol & Johnston.—Improvements in oil or gas motors for wheeled vehicles and for general purposes.

18783. Austin.—Improvements in mechanically propelled road vehicles.

18829. Lanchester.—Improvements in the igniting arrangements of gas and oil motor engines.

18831. Stephens.—Improvements in oil engines for marine and vehicular propulsion.

18988. Edwards (C. & J. Küster).—Improvements in apparatus for equalising the pressure upon the crankpins of steam and other engines.

19061. Bergmann & Vollmer.—Improvements in or appertaining to autocars and the like.

19136. Grelet.—An improved explosion motor.

19211. Prince, Smith & Monkhouse.—Improvements in internal combustion motors.

19232. Smith.—Improved means for lessening vibration in reciprocating engines and machines.

20428. Roger.—Improvements in gas and oil motors for autocars.

20449. Smith.—Improvements in lubricating the cylinders, pistons, and valves of gas engines.

20655. Wilkinson.—Improvements in gas, oil, and like engines for autocars, also applicable for other suitable purposes.

21136. Lister.—Improved oil or gas engine applicable for use in the propulsion of vehicles.

21274. Munden.—Improvements in motor vehicles.

21587. Faure.—Improvements in hot-air engines.

21675. Johnson.—Improvements in and connected with motor carriages.

21743. Martel.—Improvements in the construction of hydrocarburetted-air engines, and in their application to tram and other road vehicles.

NO.

21877. Hornsby & Sons, Ld. (Burton).—Speed regulating mechanism or petroleum and other motors.

22064. Bayer.—Improvements in rotary engines.

22376. Southall.—Improvements in oil engines.

22527. Gibbon.—Improvements in explosion engines.

22935. Lanchester.—Improvements in gas and oil motor engines.

23005. Quentin.—Improvements in and relating to hydrocarbon vapour motors.

23110. Tangye & Johnson.—A new or improved gas and oil or petroleum engine.

23138. Lones.—An improved gas engine, convertible into an oil engine or *vice versa.*

23142. Petavel.—Revolving cylinder oil or gas engine.

23270. Petréano.—Apparatus for vaporising hydrocarbons, applicable to engines worked by gas, petroleum, alcohol, and the like.

23296. The Motive Power & Light Co. Ld. & Friend.—Improvements in hydrocarbon motors.

23306. Augé.—Improvements in explosive engines.

23350.—Arrol & Johnston.—Improvements in apparatus for forming and regulating the combination of oil with air for oil motors.

23462. Wisch.—Reversing-gear for explosion motors.

23492. Monin & Perot.—Improvements in and relating to gas and petroleum motors.

23604. Roots & Venables.—Improvements in or connected with oil motors for vehicles, cycles, boats, and the like.

23802. O'Brien (Triouleyre).—Improvements in autocars.

23860. Swiderski & Schwicker.—Self-heating vaporiser for mineral oil motors.

24091. Dawes.—Improvements in internal combustion engines.

24144. Thompson (Pillon & Le Melle).—Improved balanced motor engine.

24311. Dawes.—Improvements in internal combustion engines.

24457. W. D. & S. Priestman.—Improvements in igniting devices for hydrocarburetted-air engines.

24550. Gathmann.—Improvements in rotary gas and oil engines.

24656. Bickerton.—Improvements relating to the utilisation of waste gases from gas engines for heating purposes.

24793. Crastin.—Improvements in or connected with apparatus for vaporising oil.

24804. Ide.—Improvements in steam, gas, or other engines.

24805. Lanchester.—Improvements in the igniting arrangements of gas and oil motor engines.

24858. Caldwell.—An improved governor, especially applicable to gas engines and the like.

24881. Furneaux & Butler.—Improvements in explosion engines specially suitable for propelling vehicles, boats, and other bodies.

NO.

24905. Nayler.—Improvements in vaporisers for oil motors.

24994. Oechelhaeuser.—Improvements in high-pressure gas engines.

25558. Arnold.—Improvements in the method and means for discharging the vapour generated in the water jackets of gas and oil engines.

25642. Smith.—Improved apparatus for silencing the exhaust in gas or other engines.

26233. Allen & Barker.—Improvements in oil and gas engines.

26261. Mewburn (Bates).—Improvements in and in connection with the manufacture of combustible gas, including illuminating gas, and in apparatus or plant for the purpose.

26292. Baines & Norris.—Improvements in engine lubricators, in part applicable to oil-feeding appliances for oil engines.

26399. Read & Turner.—Improvements in gas and oil engines.

26638. Allsop.—Improvements in gas and petroleum engines and motors.

26879. Power.—Improvements in governing oil, gas, and vapour engines.

27184. Simpson.—Improvements in motor-driven vehicles.

27207. Pennington.—Improvements in the electric ignition of charges in explosion engines.

27208. Pennington.—Improvements in means for suppressing the noise of the exhaust from internal combustion engines.

27276. Middleton.—Improvements in motor wheels or mechanical tractors.

27408. James.—Improvements in engine 'exhausts.'

27535. Payne.—Improvements in hydrocarbon and other vapour motors.

27568. Johnson.—Improvements in oil and gas motors.

27602. Holden.—Improvements in the construction of internal combustion engines in combination with cycles or carriages.

27603. Holden.—Improvements in the construction of internal combustion engines in combination with cycles or carriages.

27979. Thomson.—Improvements in apparatus for deriving, controlling, and regulating motive power from gas or oil engines for various purposes.

28117. Lyon.—Improved means or apparatus for igniting explosive gases in petroleum and other like motors.

28514. Tomlinson.—Improvements in and relating to internal combustion and compressed-air engines.

28523. Dutton.—Improvements in oil, gas, and analogous motors.

28527. Mackenzie & Carling.—Improvements in gas or oil motor engines, also applicable to steam or other fluid-pressure engines.

28583. Lepape.—A new or improved cooler for petroleum motors.

28648. Balzer & Humphrey.—Improvements in motors or engines.

28842. Culver.—Improvements in gas engines.

28867. Geisenhof.—An improved motor-van.

28892. Wood.—Improvements in valve gear for gas or oil engines.

28979. Roser & Mazurier.—Improvements in and relating to gas or petroleum and like motors.

NO.

29067. Turner.—An improved silent condenser for gas and like engines.

29578. Bryan.—Improvements in combined internal combustion and compressed gas or air engines.

29610. Jones.—Improvements in and pertaining to motors adapted to be worked by pressure of fluid, such as a combustible mixture of petroleum vapour, or gas with air, or analogous motive fluid.

29718. Hardingham (Webster).—Improvements in rotary engines, applicable for use as motors, pumps, blowers, or the like.

29747. Higgins, Bessemer, & Nicholson.—Improvements relating to engines or motors and to the application of the same for the propulsion of vehicles.

29854. L'Homme.—Improvements in explosion engines or motors.

29858. Altmann.—Improved method and apparatus for burning liquid fuel.

30010. Potter.—Improvements in engines actuated by oil, petroleum, spirit, or other gas-generating liquids.

30026. I. & T. W. Cordingley & Smith.—Improvements in oil motors.

30045. Toll.—Improvements in or relating to the valve mechanism of explosion engines.

30075. Marsden.—Improvements in oil or liquid hydrocarbon motors.

30133. Askham.—Improved apparatus applicable to gas engines.

30162. Romer & Perkes.—Improvements in explosive gas motors.

1897.

95. Dagnall.—Improvements in internal combustion engines.

659. Rüb.—Improvements relating to the igniting devices of the motors of motor cycles.

679. Lister.—Improvements appertaining to oil engines.

736. M. H. C. & R. E. C. Shann.—Improvements in or relating to explosion engines.

746. Gaûtier & Wehrlé.—Improvements in carburetting-apparatus.

878. Philippot.—An improved atomising device for petroleum and other motors.

900. Winton.—Improvements in explosion engines.

913. Norgrove, Westwood, J. & J. C. Bates, Poultney, & R. H. Bates.—Improvements in or relating to vaporisers for oil engines and the like.

1011. Wimshurst.—Improvements in gas and explosive vapour engines.

1160. Lake (La Société Fritscher & Houdry).—Improvements in gas and petroleum engines.

1400. Dougill.—Improvements in or relating to motor engines worked by gas or other combustible vapours.

1402. Hunter.—Improvements in gas or oil engines.

1475. Poron.—Improvements in motor engines and gear for autocars.

NO.

1598. Winton.—Improvements in explosion engines.

1652. Conrad.—An apparatus for governing the valve gear of hydrocarbon motors.

1694. Winton.—Improvements in explosion engines.

1695. Winton.—Improvements in explosion engines.

2095. Holt.—A regulator of the circulation of cooling water.

2123. Martindale.—Improvements in motors operated by fluid or gaseous pressure.

2595. Ringelmann.—Improved means for exploding combustible mixtures, and utilising the explosive force thereof for driving rotary engines.

2666. Johnson.—Improvements in and connected with the generating and transmission of power for driving tramway carriages and other road vehicles and for other purposes.

2849. Stroh.—Starting device for oil engines.

3025. Maxim.—Improvements in cooling devices for gas, oil, and steam and similar engines.

3370. Crossley.—Improvements in internal combustion motors.

3890. Auriol.—Improvements in gas engines.

4299. Paterson.—Improvements in and connected with petroleum and like engines for motor cars and other purposes.

4528. Caley & Stephenson.—Improvements in gas, oil, and other explosion engines.

4556. Pennington.—Improvements in or relating to the cooling of cylinders of explosion engines.

4580. Ollivier.—Improvements relating to explosion engines.

4605. Ball.—Improvements in and relating to oil and gas engines.

4610. Embleton.—Improvements in explosion motors.

4640. Vallée.—Autocar with special petroleum motor.

4879. Prentice.—Improvements in steam, gas, and other engines.

4888. Ollivier.—Improvements in gas, petroleum, or like motors.

4963. Hamilton.—Improvements in steam, gas, and air engines.

5147. Rolfe & Hornby.—Improvements in and connected with explosion engines.

5522. Brewer (Nicolas).—Improvements in or connected with gas or internal combustion motors.

5526. Clubbe, Southey, & The Electric Motive Power Co. Ld.—A firing device for internal combustion engines.

5618. Bowden & Urquart.—Improvements in or connected with internal combustion engines working with liquid hydrocarbon and air.

5736. Lees.—Improvements applicable to explosion engines.

5882. Roots & Venables.—Improvements in petrocars or motor vehicles.

6035. Dunsmore.—Improvements in and relating to gas and oil engines.

6645. Tournet.—Certain improvements in oil and gas engines.

NO.
6651. Hargreaves.—Improvements in or relating to internal combustion engines.
6688. Myers.—Improvements connected with explosive vapour power engines.
7074. Rowden.—Improvements in apparatus for igniting the compressed charges in gas or oil motors.
7098. Reeve.—Improvements in and relating to gas or liquid fuel engines.
7333. Le Brun.—Improvements in gas, petroleum, or like motors.
7526. Sundberg.—Improvements in regulating devices for gas and petroleum engines.
7770. Baines & Norris.—Improvements in oil engines.
7785. Banki & Csonka.—Improvements in automatic igniting apparatus for gas and petroleum motors.
7969. Longuemare.—Improvements in carburettors for explosion engines.
7979. Martindale.—Improvements in rotary engines.
8056. Pütsch.—Improvements in or relating to gas engines.
8064. Marks (Bouvier).—Improvements in vaporisers for oil motors.
8100. Shann.—Improvements in or relating to internal explosion engines.
8318. Pinkney.—Improvements in oil engines.
8471. Royer.—Improved means for cooling the water or condensing the steam from the motors of motor-cars.
8529. Dougill & Marks.—Improvements in gas, oil, and like engines.
8547. Thornton & Pollard.—Improvements in motors worked with heated compressed air, in parts applicable to internal combustion engines.
8822. Wimshurst.—An improvement in gas or oil engines.
9002. Erie.—Improvements in motor road vehicles.
9098. Scütz & Heydemeyer.—Improvements in or relating to apparatus for starting gas engines or the like.
9389. Baker.—Improvements in gas engines.
9463. Klaus.—Improvements in motor or self-propelled vehicles.
9722. Roots & Venables.—Improvements in and connected with oil motors for vehicles and propelling generally.
9784. Grivel.—Improvements in and relating to carburetting apparatus, particularly applicable to petroleum engines, oil engines, and the like.
9907. Peugeot.—An improvement in oil engines.
9929. Buck & Torrey.—Improvements in apparatus for carburetting air.
9963. Grivel.—Improvements in carburetting air or internal combustion engines, particularly adapted for the propulsion of motor cars and other vehicles.
10005. Fritscher & Houdry.—Improvements in gas or hydrocarbon motors.
10097. Henroid-Schweizer.—Improvements in internal combustion engines.
10261. Boult (Lefebvre).—Improvements in or relating to apparatus for carburetting air.

NO.

10519. Johnson.—Improvement in and connected with oil and other explosion motors for the purpose of reducing the smell and visible vapour of or from the exhaust.

10620. Maxim.—Improvements in aërial or flying machines.

11015. Marks (Chaudun).—Improvements in rotary motors.

11334. Vaughan-Sherrin.—Improvements in electric ignition devices for gas engines and other gaseous explosive mixture engines.

11414. Baker & Offen.—Improvements in gear for converting reciprocating motion into rotary in engines and other machines.

11520. Mitchell.—Improvements in rotary engines.

11547. Casley & Woodman.—Improvements in hydrocarbon motors.

11619. Pilcher.—Improvements in and connected with engines actuated by mixed products of combustion and steam.

11710. Boult (La Société Anonyme d'Automobilisme et de Cyclisme).—Improvements in or relating to oil and similar motors.

11801. Fielding.—An improved vaporising and igniting device for gas and oil motor engines.

11930. Esteve.—Improved mineral oil engine.

11951. Lamy & Richard.—Improvements in or relating to internal combustion engines or motors.

12050. Fairhurst.—Improvements in motive power engines actuated by the explosive force of gases or vapours.

12117. Pool.—Improvements in explosion engines.

12199. Johnson.—Improvements in and connected with fluid-pressure apparatus for generating, storing, and transmitting power.

12553. Rossel.—Improvements in petroleum and like motors.

12924. Thompson (Loutzky).—An improved four-stroke cycle motor for bicycles and the like.

12942A. Johnson.—Improvements in electrical igniting apparatus for explosion engines and for other purposes.

12954. Simms.—Improvements in cooling the surfaces of the cylinders of explosively driven engines.

13092. Allsop.—Starting gas and petroleum engines and motors.

13161. Calloch.—Improvements in internal combustion engines.

13325. Letombe.—Improvements in and relating to gas engines.

13517. Westinghouse & Ruud.—Improvements in gas engines.

13721. Straker, Caird, & Rayner.—Improvements in oil motor engines.

13734. Lake (La Société Main Giusti & Co.)—An improved explosion engine, more especially applicable to the propulsion of vehicles.

13988. Hunt.—Improvements in vaporisers and igniters for oil motor engines, partly applicable to gas motor engines.

14165. Barnes.—Improvements in internal combustion engines using hydrocarbon as fuel.

14298. Smith.—Gas motors with differential cyclinders.

NO.

14397. Wattles.—Improvements in the generation and utilisation of hydrogen gas and electricity for motive power, lighting and heating purposes.

14455. Capel.—Improvements in gas engines.

14649. De la Croix.—Improvements in motor cycles.

14814. White (Brown).—An improved method of apparatus for generating motive power by explosions.

14826. Hall.—Improvements in or relating to power-transmission apparatus.

15233. Duryea.—Improvements in hydrocarbon or gas engines.

15348. Simms.—Improvements in or connected with the exhaust valves of explosion engines.

15354. Boult (Chaudun).—Improvements in or relating to rotary motors.

15411. Bosch.—Improved electric igniter for gas engines.

15822. Crozet.—Improvements in or connected with cylinder and piston motors.

15908. Katz.—Improvements in or relating to explosion motors.

15980. Sello, Schaefer & Lehmbeck.—Improvements in oil and gas engines.

15983. Uhlenhuth.—Improvements in internal combustion engines.

16074. Gallice.—Motor engine worked by explosive fluid mixtures.

16380. Ricci.—Improved mechanism for regulating the ignition point in oil and other motors.

16399. Bracklow.—Improvements in or relating to gas and oil motors.

16411. Seunier.—An improved hydrocarbon motor.

16631. Russ.—Improvements in and relating to gas engines.

16705. Calloch.—A new or improved motor car.

16729. New.—Improvements in heavy-oil engines.

16943. Robinson & Molyneux.—Improvements in pistons.

16977. Jones.—Improvements in means for heating the ignition device for gas, oil, or spirit engines.

17127. Petréano.—Improvements in and connected with gas and hydrocarbon engines.

17204. Southall.—Improvements in gas and oil motor engines.

17317. Petréano & Bonnet.—Improvements in and connected with gas and hydrocarbon engines.

17839. Hornsby & Edwards.—Improvements in or connected with explosion engines.

17842. Marconnet.—Improvements in or connected with apparatus for the generation of gaseous fluid pressure.

18005. Thompson (Julien).—Improvements in and relating to apparatus for producing gas suitable for heating, motive power, or lighting purposes by the aid of volatile hydrocarbons.

18210. E., T. H., & L. Gardner.—Improvements in or relating to oil motors.

18531. Lawson.—Improvements in or relating to motors, especially suitable for the propulsion of motor road vehicles.

NO.

18546. Tomlinson.—Improvements in and relating to internal combustion or explosive engines.

18804. Petréano.—Improvements in means for reversing gas and hydrocarbon (petroleum) motors.

18940. Martini & Deimel.—Improvements in gas ignition apparatus.

19533. Haddan (Heinle & Wegelin).—Improvements in gas motors.

19534. Haddan (Heinle & Wegelin).—Improvements in lubricating devices for motor cycles.

19642. Dymond (Meyer).—Improved process for attaining a very high ignition temperature in hydrocarbon engines.

19673. Hayot.—Improvements in gas turbines.

19910. Rowden.—Improvements in internal combustion engines.

19936. O'Donnel (De Bouilhac).—Improvements in and relating to motor cars.

20116. Cail.—Improvements in or relating to internal combustion engines or motors.

20135. Dymond (Dürr).—Improvements in hydrocarbon locomotives.

20236. J. F. & R. H. Shaw.—An improved method for supplying lubricating oil in regular quantities for gas and oil engines and the like, and for supplying in regular quantities combustible liquids for driving purposes.

20269. Cordonnier.—New or improved rotary motor.

20389. Firman & Cave.—Improvements in explosion engines.

20455. Jensen (C. & A. White).—An electric igniter for internal combustion engines.

20617. Martha.—Improvements in gas, petroleum or mineral-oil motors.

20761. Roots.—Improvements in internal combustion engines.

20801. Edmondson & Dawson.—Improvements in the method of and means employed for starting internal combustion engines.

20880. Ironmonger.—Improvements in rotary engines actuated by steam or other expansive gases.

21329. Dutton.—Improvements in oil, gas, and analogous motors

21738. Bomborn.—Improvements in fuel-feeding devices for petroleum motors and similar combustion engines.

21833. Scott & Hawkins.—Improvements in and relating to the generation of gas for motive power, illuminating, heating, and other purposes.

22065. Dymond.—Improvements in gas burners suitable for use in incandescent gas lighting and for other purposes.

22310. Pinkney.—Improvements in fluid-pressure heat motors.

22564. Fistié.—Improvements in gas engines.

22971. Leigh (Gosselin).—Improvements in motors driven by combustible petroleum or any other suitable gas or vapour.

23357. Simpson.—Improvements in and connected with internal combustion motors.

NO.

23361. Thompson (De Von).— Improvements in and relating to gas engines.

23541. Cribbes & Ross.—A new or improved means of obviating or suppressing the noise caused from the exhaust gases escaping from gas or other engines, and apparatus connected therewith.

23582. W. D. & S. Priestman & Richardson.—Improvements in the working of internal combustion engines.

23622. Rowlingson (La Société Diligeon et Cie).—Improved cooling arrangement for internal combustion engines, specially applicable to motor road vehicles.

24096. Weiss & Mietz.—Improvements in and connected with explosion engines.

24432. Mason & Rixson.—Improved water regulator for heat in gas engine water tanks.

24712. Doolittle (Still & Bengough).—Improvements in or pertaining to motor apparatus suitable for propelling carriages, cycles, and other road vehicles, or for light power purposes generally.

24861. E., T. H., & L. Gardner.—New or improved feed mechanism for internal combustion engines.

25581. Crouan.—A lighting regulator for gas and petroleum motors, lighting electrically.

25582. Crouan.—Electric lighter for gas and petroleum motors.

25856. Hesketh & Marcet.—New or improved means for generating gaseous products of combustion under pressure, for operating engines or for other purposes.

25987. Hamilton.—Improvements in gas and similar engines.

26898. Iden.—Improvements in spirit or light-oil motors for vehicles and the like.

27112. Crouan.—New system of regulator for gas and petroleum motors.

27301. Ravel.—Improvements in gas and like engines.

27315. Rowbotham.—Improvements in explosion engines.

28390. Boult (Rumpf).—Improvements in or relating to internal combustion engines.

28821. Thompson (Irgens & Brunn).—Improvements in and connected with rotary motors.

28918. Turrell & Lawson.—Improvements in or relating to motor vehicles.

29074. Brillié.—Improvements in explosion motors.

29361. Kerridge.—Improvements in or relating to electric gas-lighting and controlling devices.

29467. New.—Improvements in the ignition arrangements of explosion engines.

29468. New.—Improvements in explosion engines.

29508. Huber.—Method and apparatus for utilising steam and combustion gases at very high pressures as motive power.

NO.

29567. Boult (Dusaulx.)—Improvements in or relating to carburettors for oil motors.

29593. Lloyd.—Improvements in and relating to explosion engines.

30106. Chauveau.—Apparatus for mixing the explosive charge of internal combustion engines.

30182. Conrad.—Improvements in balancing devices for power engines with thrust crank driving.

30266. Johnson.—Motor car.

NAME INDEX

TO

GAS AND OIL ENGINE PATENTS

1791-1897 INCLUSIVE

Abel, C. D. (Beissel), 1882—3435
— — (Daimler), 1879—3245; 1880—343
— — (Langen & Otto), 1866—434; 1867—2245
— — (Daimler), 1874—414, 605; 1875—71
— — (Gas-Motoren-Fabrik Deutz), 1885—11933; 1886—5804; 1887—847, 1189, 11503, 12187, 17188, 17896; 1888—688, 3020, 3095, 5724, 9602, 14349; 1889—5616, 18746, 20892; 1891—1903, 6717, 8469, 14519, 17724, 22847; 1892—2728, 13204; 1893—735, 9181, 10274; 1894—408, 21829; 1895—10758; 1896—795, 3217, 12003, 18294
— — (Otto), 1875—3615; 1876—2081; 1878—1770; 1881—60; 1883—1677
— — (Spiel), 1881—4244
Adam, 1887—1266
Adams, 1891—741; 1892—6828; 1894—6364, 8041
Adorjan, 1896—6378
Aeugenheyster, 1888—13414
Ainsworth, 1884—8960
Alexander, E.P., 1875—4342; 1879—3905
Allcock, 1881—565
Allen and another, 1895—21315; 1896—3798, 26233
Allison (McNett), 1889—12045
Allsop, 1897—13092, 26638
Alston, 1896—4766

Altham, 1896—12805
Altmann, 1888—8317; 1891—7157; 1892—21534; 1896—29858
Anderson, J., 1854—191; 1859—2767; 1866—3363; 1871—2326; 1882—1754; 1887—15010
Anderson, 1888—14248, 17413; 1892—12165
Andrew, 1883—1010, 3066, 4291; 1884—13221; 1885—5561; 1892—17227, 20802, 20803
Angele, 1879—3905
Antisell & Bruce, 1875—2016
Arbos, J., 1862—3108
Archat, 1887—9111
Archibald, C. D., 1858—996
Aria, 1888—9342
Armstrong, 1894—22852
Arnold, 1896—25558
Arrol and another, 1896—18585, 23350
Arschauloff, 1894—13825
Ashbury and others, 1882—5188
Asher, 1885—1424
Ashworth, 1891—18020
Askham, 1896—30133
Astley and another, 1896—3331
Atkinson, 1879—3213; 1881—4086; 1882—4378, 4388; 1884—3039, 16404; 1885—2712, 3785, 15243; 1886—3522; 1887—11911; 1889—20482; 1892—2181, 2492; 1893—16900, 23075; 1895—11955; 1896—2895
Audin, 1896—13864
Auge, 1896—23306

Boult (Brauer & Windisch), 1893—15900
— (Capitaine), 1888—15840, 15841, 15845, 15846
— (Charter), 1892—12183
— (Compagnie des Moteurs Niel), 1893—14546
— (Lausmann), 1894—12917
— (La Société Française des Cycles Gladiator), 1895—20914, 23706
— (Karger), 1895—1071
— (Landry & Beyroux), 1896—9259
— (La Société Anonyme d'Automobilisme et de Cyclisme), 1897—11710
— (Lefebvre), 1897—10261
— (Chaudun), 1897—15354
— (Dusaulx), 1897—29567
— (Rumpf), 1897—28390
— (La Société des Moteurs Crebessac), 1893—14891
— (Rotten), 1889—17024
— (Sharpneck), 1890—18645
— (Levasseur), 1891—9006
Boulton, M. P. W., 1864—1099, 1291, 1636, 3044; 1865—501, 827, 1915, 1992; 1866—738; 1868—1988; 1876—2288, 3620, 3767; 1877—766; 1878—2278, 2525, 2609, 2707; 1879—495; 1881—1202, 1389, 3367; 1886—2653
Bouneville, H. A., 1867—1575
Bourne, J., 1868—1878, 3594; 1869—3705; 1870—1859
Bousfield and another, 1833—388; 1895—11282; 1896—2113
Bousfield and others, 1894—11101
Bousfield (La Société des Procédés Desgoffe et de Georges), 1896—7250
Bouton and another, 1895—19734, 22402; 1896—9337, 9732
Bouvier, 1897—8064
Bowden and another, 1897—5618
Bower & Hollingshead, 1868—2808
Boys, 1886—10332
Bracklow, 1897—16399
Bradford, 1892—3156
Bradley, 1892—2862
Braham and another, 1882—2751
Brandon, A. H., 1869—3178
Brauer, 1893—15900
Brayton, 1874—2209; 1890—11062; 1894—6138
Brayton Petroleum Motor Co. Ld. and another, 1895—6523, 12287
Breittmayer, 1880—3140; 1887—16257
Brewer (Nicolas), 1897—5522
Brice 1892—919
Briggs, 1892—16365; 1895—16079; 1896—6067
Brightmore, 1888—4057
Brillié, 1897—2074
Brindley (Naylor & Wilson), 1895—24235
Brine, 1884—12312; 1886—942
Brinn, Q. L., 1875—3274
Brinns, 1890—4362; 1892—13859
Briscall, 1883—5020
British Motor Syndicate Ld. (Maybach), 1896—12337
Bromhead (Neil), 1896—4153, 18304
Brooks, 1892—1246
Brooman, R. A., 1863—2098
Brough, W. B. & C. S., 1896—3696
Browett, 1884—14341; 1887—2520, 11345; 1888—7547, 16057; 1889—18847
Brown, 1825—5150; 1826—5350; 1846—11072; 1882—1874; 1897—14814
Bruce & Antisell, 1875—2016
Brückert, 1893—9549
Brünler, 1886—2140; 1892—7047, 16379, 16380, 16381, 16382; 1893—16751, 16752, 21175; 1894—5680, 9780; 1895—19568
Brunn and another, 1897—28821
Brutton, 1889—6161
Bryan, 1896—29578
Bryant, 1984—14476
Brydges, 1881—3330
Buck and another, 1897—9929
Buckeye Manufacturing Co., 1895—23113
Bull, 1883—5113; 1887—10202; 1889—10634
Bullock, 1883—5085
Burgh, 1885—15194
Burne, 1896—4067
Burt, 1887—11678; 1888—3427; 1890—12690; 1891—19086, 22578; 1893—1277, 7466; 1894—13546
Burton, 1896—21877
Buss, 1875—1933
Butcher, 1879—2618, 4377; 1880—474; 1881—3786; 1883—1835; 1884—5641
Butler, 1887—15598; 1888—1780, 1781; 1890—6990
— and others, 1889—9203; 1893—13282
Butter, 1894—7630
— and another, 1896—24881

1884—3537, 15311; 1887—15010; 1888—14248, 17413; 1891—10298; 1892—2862; 1893—16900, 23075, 24584; 1896—2895
Crossley, F. W., 1874—3205
— — and W. J., 1875—3221; 1877—2177
Crouan, 1893—8967; 1895—6800; 1896—12758; 1897—25581, 25582, 27112
Crow, 1896—4634
Crowden, 1896—2024
Crowe and others, 1883—2706; 1889—7594
Crozet, 1897—15822
Cruikshank (White), 1890—16301
Csonka, 1889—6296
Csonka and another, 1897—7785
Csonka and others, 1894—11119
Culver, 1896—28842
Cumming, 1895—19391
Cundall, J. S., R. D., W. D., & H. C., 1896—6974
Cundall, R. D., W. D., & H. C., 1895—18706
Cunynghame, 1886—10332
Czermac, 1892—3292

DAGNALL, 1897—95
Daimler, 1874—414, 605; 1875—71; 1879—3245; 1883—5784; 1885—4315, 10786; 1885—13163; 1886—14034; 1889—10007
Dale, 1896—8255
Dalton and another, 1879—3467
Daly, 1889—18847
Davey, 1882—2527, 3787
Davies, 1883—781
Davis, 1894—11108
Davy, 1884—12264; 1886—3473; 1887—7677, 13916, 15658; 1892—13077; 1893—3401, 4696; 1894—3485
Dawes, 1891—4004; 1896—24091, 24311
Dawson, 1885—7920; 1886—4460; 1887—6501; 1890—6407; 1891—9865; 1892—6952; 1893—1070, 7426; 1894—11802; 1895—12097
Dawson and another, 1897—20801
Day, 1891—6410, 9247; 1895—15514; 1896—11307
Deacon, 1886—3010
De Bouilhac, 1897—19936
Debouttevilie & Malandin, 1884—3986, 6652, 15248; 1885—15710;

1886—11; 1888—2805, 8300, 9249; 1890—14900
Décombe and another, 1894—3303
De Coninck, 1896—11573
De Dion and another, 1895—19734, 19735, 22402; 1896—9337, 9732
Deed and others, 1896—3503
Deimel and another, 1897—18940
De la Croix, 1897—14649
Delahaye, 1895—19980
Dellatre, 1893—9549
De Palacios and another, 1894—13996
De Sales, 1895—23417
De Vesian and another, 1894—12820
De Von, 1897—23361
Dewhurst, 1884—5412
Dheyne and others, 1890—5933, 15525
Dickinson, 1894—9305
Dickson, J. F., 1875—744
Diederichs, 1889—14926
Diesel, 1892—7241; 1895—4243, 12306
Diligeon & Cie, 1897—23622
Dinsmore, 1885—13309
Dixon, 1893—2110
Donald, 1879—540
Donaldson, 1895—6972; 1896—5277
Doolittle (Still & Bengough), 1897—24712
Dorrington, 1890—6910; 1891—18276
Dougill, 1881—2122; 1883—3097; 1884—12318; 1887—10360; 1888—9587; 1893—12427; 1897—1400
Dougill and another, 1896—1327; 1897—8529
Douglas, J. C., 1835—6875; 1884—11750
Dowie, 1892—20088
Dowsing and another, 1897—6573, 14639
Drake, 1893—16675 (see *ante*)
Drake, J. A. & W., 1896—12633
Drake and another, 1881—4407; 1882—1717; 1891—18640, 21015, 21229; 1892—11141, 11708, 22797 1893—8639
Drysdale, 1893—12600
Ducretet, 1887—9717
Duerr, 1889—20161
Dufrene and others, 1882—1868
Duke, 1894—21032
Dulier, 1894—573
Duncan, 1896—10164
Duncan and others, 1895—17315
Dunkley, 1896—18520
Dunsmore, 1897—6035

Huntington, 1889—14592; 1891—9268
Hurcourt, 1868—354
Hurd, 1879—2193
Huskisson, 1896—18202
Hutchinson, 1880—5471; 1882—2329; 1886—4785, 12086, 14269
Hutter, 1892—3292
Hydes & Bennett, 1869—3087

Ibbett, 1896—6740
Ide, 1896—24804
Iden, 1897—26898
Imray, J., 1873—1946; 1888—1336
— — (Glaser), 1889—8778
— — (Schweiser), 1883—836
— — (Weilbach), 1889—3887
Instone, 1892—3047
Ireland, 1885—1478
Irgens, 1891—11138
— and others, 1897—28821
Ironmonger, 1897—20880

Jahn, 1896—17448
Jakeman and another, 1894—7485
James, 1895—2638; 1896—27408
Janiot, 1889—17295
Jastram, 1892—21857, 21858
Jenkin, F., 1874—2441
Jenner, 1880—3607
Jensen, P., 1872—1423
— (Weilbach), 1888—15858
— (C. & A. White), 1897—20455
Johns, 1884—5302, 5303
Johnson, J., 1841—8841
— — (Tower), 1895—5373
Johnson J. H., 1860—335; 1861—107; 1874—2795
— — (Bisschop), 1882—579
— — (François), 1878—2474
— — (La Société des Moteurs Labrigot), 1877—3159
— — (Wertheim), 1876—3444
Johnson, 1879—2732; 1880—1131
— (Deboutteville & Malandin), 1884—3986, 6652, 15248; 1885—15710; 1886—11; 1888—2805
— (Genty), 1891—14209; 1892—8678
— (Hille), 1892—13088
— (La Société des Tissages et Ateliers de Construction Diederichs), 1887—5095
— (La Société Salomon), 1888—2804
— (Lenoir), 1883—5315; 1885—610
— (Pieper), 1891—19772, 19773
Johnson & Cropper, 1878—3444

Johnson, C. M., 1896—21675, 27568 1897—2666, 10519, 12199, 12942A, 30266
— W., and another, 1896—23110
Johnston, 1888—8252; 1895—18379, 20189; 1896—18585
— and another, 1896—23350
Jones, 1896—29610; 1897—16977
Julien, 1897—18005
Junkers, 1892—14317
Justice (Hale), 1887—11255
— (Backeljau), 1884—11361
— (Baldwin), 1890—12678
— (Osam), 1881—3415
— (Hale), 1883—2192, 5265; 1885—10401
— (Taylor), 1886—4881

Kabath, 1883—999
Kane, 1895—20305
Karavodin, 1895—749
Karger, 1895—1071
Kaselowsky, 1890—4574; 1891—11680
Katz, 1897—15908
Keating and another, 1896—6573
Kelly, 1892—11598
Kempoter, 1885—1581
Kenworthy and another, 1879—3467
Kerr, 1891—21496; 1892—17427; 1893—3332, 3971, 10310
Kerridge, 1897—29361
Kesseler, 1880—4159
Key, 1891—6949
Kidd, 1876—1034
Kierzkowski, De, 1876—3191
Kinder & Kinsey, 1867—499
King, 1879—4337; 1881—4223; 1883—638; 1884—7284-7288; 1885—1478, 1700
King (Connelly), 1890—5621; 1891—14002
Kirchenpauer, 1883—3272, 5042
Kirkhove and another, 1881—3561
Kirkwood, Lascelles & Hall, 1874—4410
Klaus, 1897—9463
Klunzinger, 1895—8355
Knight, 1887—2783, 13555; 1888—9691; 1889—6831; 1891—20926; 1892—23323; 1894—17233
Kolbe, 1895—4972, 8815, 8817
Körting, 1883—2702; 1887—12863; 1888—17167
Kortung, 1881—2931
Kortynski, 1888—6468
Kosakoff, 1887—12696

Petréano and another, 1897—17317
Peugeot, 1896—11078 ; 1897—9907
Philipot, 1897—878
Philippi, 1883—3272
Pickering, 1883—3708
— and others, 1894—15061
Picking and another, 1879—3561 ; 1883—2492, 5406
Pieper, 1891—19772, 19773
— (Krauss), 1879—309
— (Korting and another), 1883—2702
— (Schaeffer), 1878—290
Piercy, 1884—5797
Piers, 1888—10983, 10984 ; 1889—2144 ; 1892—15247 ; 1894—10451, 10452 ; 1895—1623
Pilcher, 1897—11619
Pillon and others, 1896—24144
Pinchbeck, J., 1865—905
Pinkert, 1896—6872
Pinkney, 1881—2645 ; 1885—1218 ; 1887—1986 ; 1888—19013 ; 1889—3525 ; 1890—17167 ; 1891—103, 7313, 11138, 17955 ; 1892—3203, 20683 ; 1893—22753 ; 1895—644, 21521 ; 1897—8318, 22310
Pinkus, H., 1839—8207 ; 1840—8644
Piquet and Co., 1894—10034
Platts and others, 1894—15061
Plessner, J. M., 1870—194 ; 1871—2587
Polke, 1896—11992
Pollard and another, 1897—8547
Pollock, 1884—4639 ; 1892—8401
Pollok and another, 1894—23802
Pons y Cūret, 1894—11593
Pool, 1895—10621 ; 1897—12117
Pope, 1885—3471
Poron, 1897—1475
Porteous, 1882—2058
Potter, 1896—30010
Pottle, 1880—9
Poultney and others, 1897—913
Power, 1896—26879
Pratis and another, 1896—16277A
Prentice, 1884—14512 ; 1897—4879
Prestwick and another, 1895—22161
Priestman, 1885—10227 ; 1886—1304 16779 ; 1887—1454, 5951, 12432; 1888—270 ; 1889—6682 ; 1891—3830, 4142, 5250 ; 1892—21342 ; 1893—12843, 20808 ; 1894—15721 ; 1896—6738, 24457
— and others, 1897—23582
Prince, 1895—17282 ; 1896—6718
— and others, 1896—19211
Proell and others, 1890—7177
Protector Lamp and Lighting Co., Ld., 1895—22161
Publis, 1889—1957
Pullen, 1893—12917
Purchas, 1888—11614
Purnell, 1884—12431 ; 1888—10165 ; 1891—7047
Pursell, 1879—1727, 4396 ; 1880—3869
Pütsch, 1897—8056

QUACK, 1883—4023 ; 1888—2466
Quaglio and another, 1882—5042
Quentin, 1896—23005
Quick and another, 1881—5575
Qurin, 1893—16290

RACHOLZ, 1883—4193
Rackham and another, 1895—3783
Rademacher, 1892—21917
Ramsbottom, 1878—228
Rankin, 1892—826
Rapier, 1883—5928
Ravel, 1887—16257 ; 1897—27301
Rayner and others, 1897—13721
Read and another, 1896—26399
Reddie (Murray), 1884—12714
Redfern (Gardie), 1886—6161
— (La Société Anonyme des Moteurs Thermiques Gardie), 1892—16413
— (McDonough), 1884—13283
— (Nordenfelt & Christophe), 1894—11526
— (Sack & Reunert), 1876—3370
— (Smyers), 1885—11290
Reeve, 1897—7098
Regan, 1884—16890 ; 1888—15448
Reid, 1893—2523
— (Brayton), 1894—6138
Rennes, 1891—6727
Repland (Niel), 1889—875
Reynolds, J. W. B., 1844—10404 ; 1896—3331, 17926
Rhodes, 1881—5259
— and others, 1880—4398
Ricci, 1897—16380
Richard and another, 1897—11951
Richards, 1888—15158
Richardson, 1890—11755 ; 1892—112 1768, 4347, 4352, 4375, 5972
— and others, 1896—6738 ; 1897—23582
Ridealgh, 1887—4511 ; 1891—6598, 19811
Rider, 1879—2191

GENERAL INDEX

Spottiswoode & Co. Ltd., Printers, New-street Square, London.