DECLASSIFIED E.O. 12065 SECTION 3-402/NNDG NO. 1/50/3

SKETCH

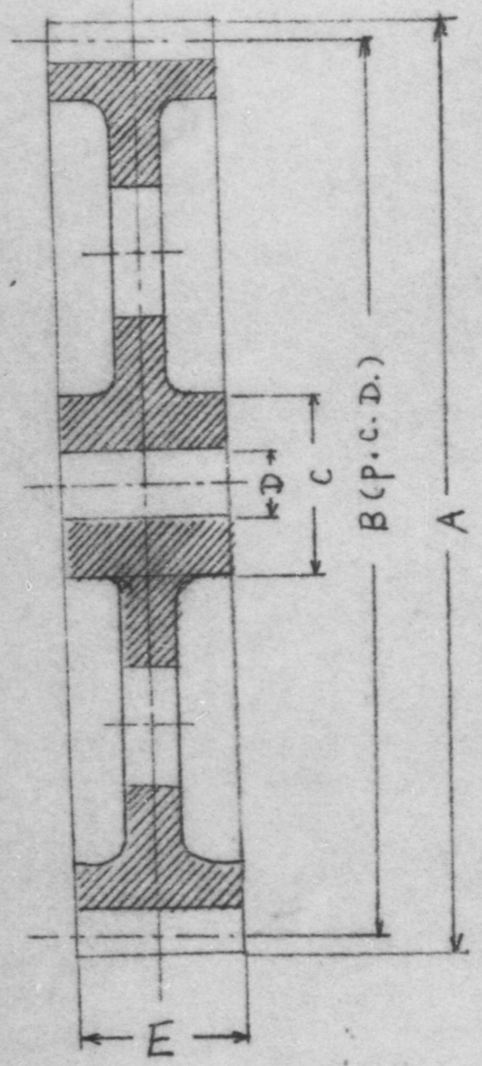

No.	DP	NT	A	B	C	D	E	Number of Arm	Number
			inch	inch		inch	inch		
1	5	20	4.400	4.000		2.000	1.750		2
2	5	25	5.400	5.000		2.000	1.750		1
					inch				
3	5	30	6.400	6.000	3.000	2.000	1.750	4	2
4	5	35	7.400	7.000	3.000	2.000	1.750	4	1
5	5	40	8.400	8.000	3.500	2.000	1.750	4	2
6	5	45	9.400	9.000	4.000	2.000	1.750	4	1
7	5	50	10.400	10.000	4.000	2.000	1.750	4	2
8	5	55	11.400	11.000	4.000	2.000	1.750	4	1
9	5	60	12.400	12.000	4.000	2.000	1.750	5	2
10	5	65	13.400	13.000	4.000	2.000	1.750	5	1
11	5	70	14.400	14.000	4.000	2.000	1.750	5	2
12	5	75	15.400	15.000	5.000	2.000	1.750	5	1
13	5	80	16.400	16.000	5.000	2.000	1.750	5	2
14	5	85	17.400	17.000	5.000	2.000	1.750	5	1
15	5	90	18.400	18.000	5.000	2.000	1.750	6	2
16	5	95	19.400	19.000	5.000	2.000	1.750	6	1
17	5	100	20.400	20.000	5.000	2.000	1.750	6	2
18	5	105	21.400	21.000	5.000	2.000	1.750	6	1
19	5	110	22.400	22.000	5.000	2.000	1.750	6	1
20	5	115	23.400	23.000	5.000	2.000	1.750	6	1
21	5	120	24.400	24.000	5.000	2.000	1.750	6	1

(3)

DECLASSIFIED E.O. 12065 SECTION 3-402/NNDG NO. 15013

(4)

Tail Stock.

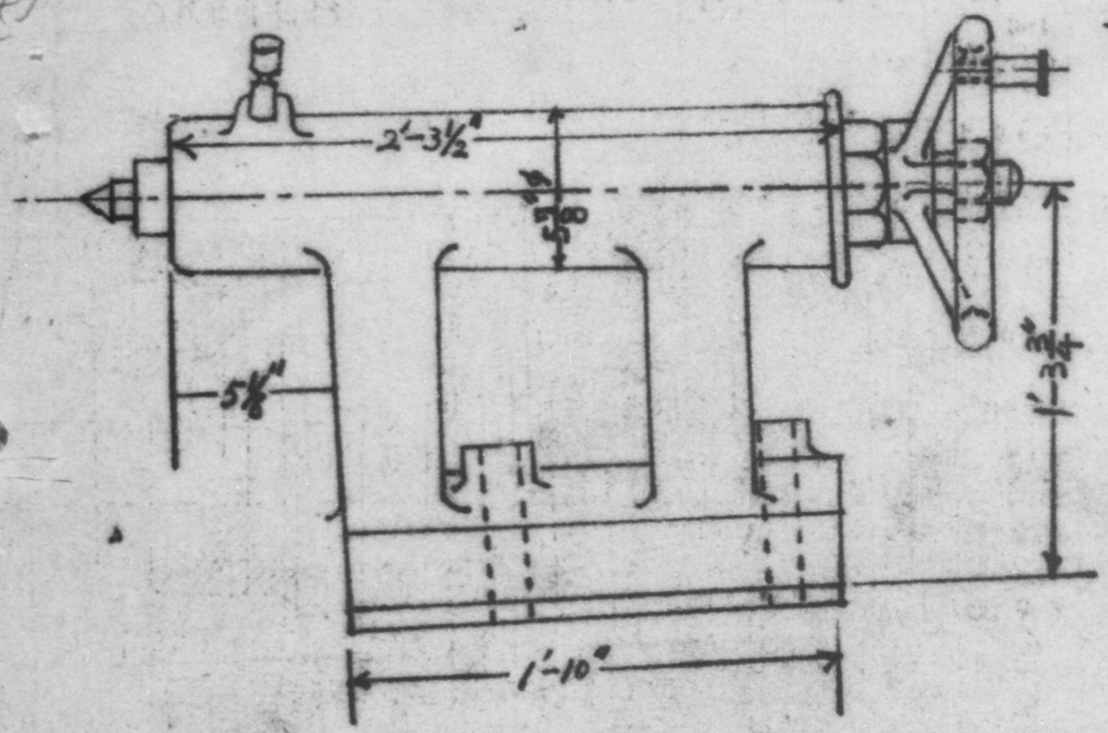

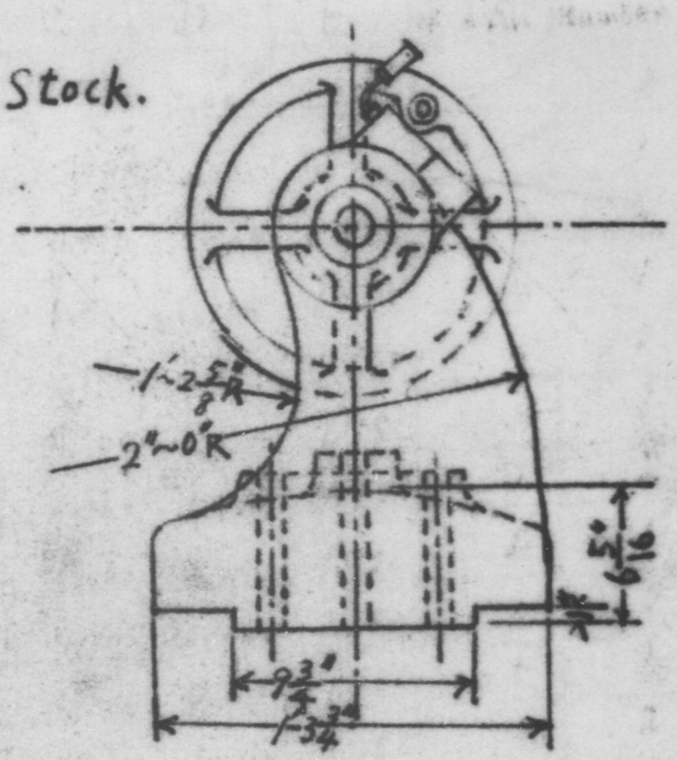

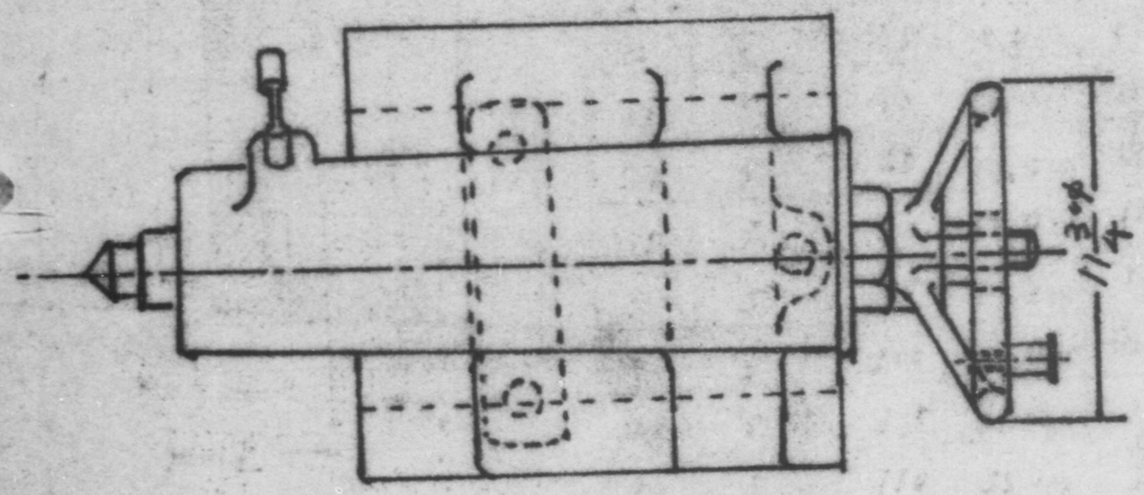

DECLASSIFIED E.O. 12065 SECTION 3-402/NNDG NO. 175013

(5)

Tanie-Gumi Sangyo K.K.(Tanie-Gumi Industry Co., Ltd.

LIST ON THE DEFICIENT REQUISITES OF THE 1ST CLASS REPARATION MACHINES

NAME OF MACHINES	NUMBER IN REGISTRATION LIST	DEFICIENT REQUISITES		
		NAME	QUANTI-	CLASSIFICATION
ELECTRIC DRILL(½")	20-2-1	CHUCK(½")	1	ABLE TO GET IN MARKET
"	20-2-2	TAP CHUCK(½")	1 1	ABLE TO GET IN MARKET "
"	20-2-4	HANDLE CHUCK(½")	1 1	NEED TO MAKE NEWLY ABLE TO GET IN MARKET

LIST ON MENDING FOR THE 1ST CLASS RAPARATION MACHINES

NAME OF MACHINE	NUMBER IN REGISTRATION LIST	PART WHICH MUST BE MENDED	MATERIAL FOR MENDING			POSSI-BILI-TY FOR MEND-ING
			NAME	QUAN-TITY	PRESENCE IN STOCK	
ELECTRIC DRILL (4 BU)	20-2-1 20-2-2 20-2-4	MENDED ALREADY " "				

DECLASSIFIED E.O. 12065 SECTION 3-402/NNDG NO. 175013

(6)

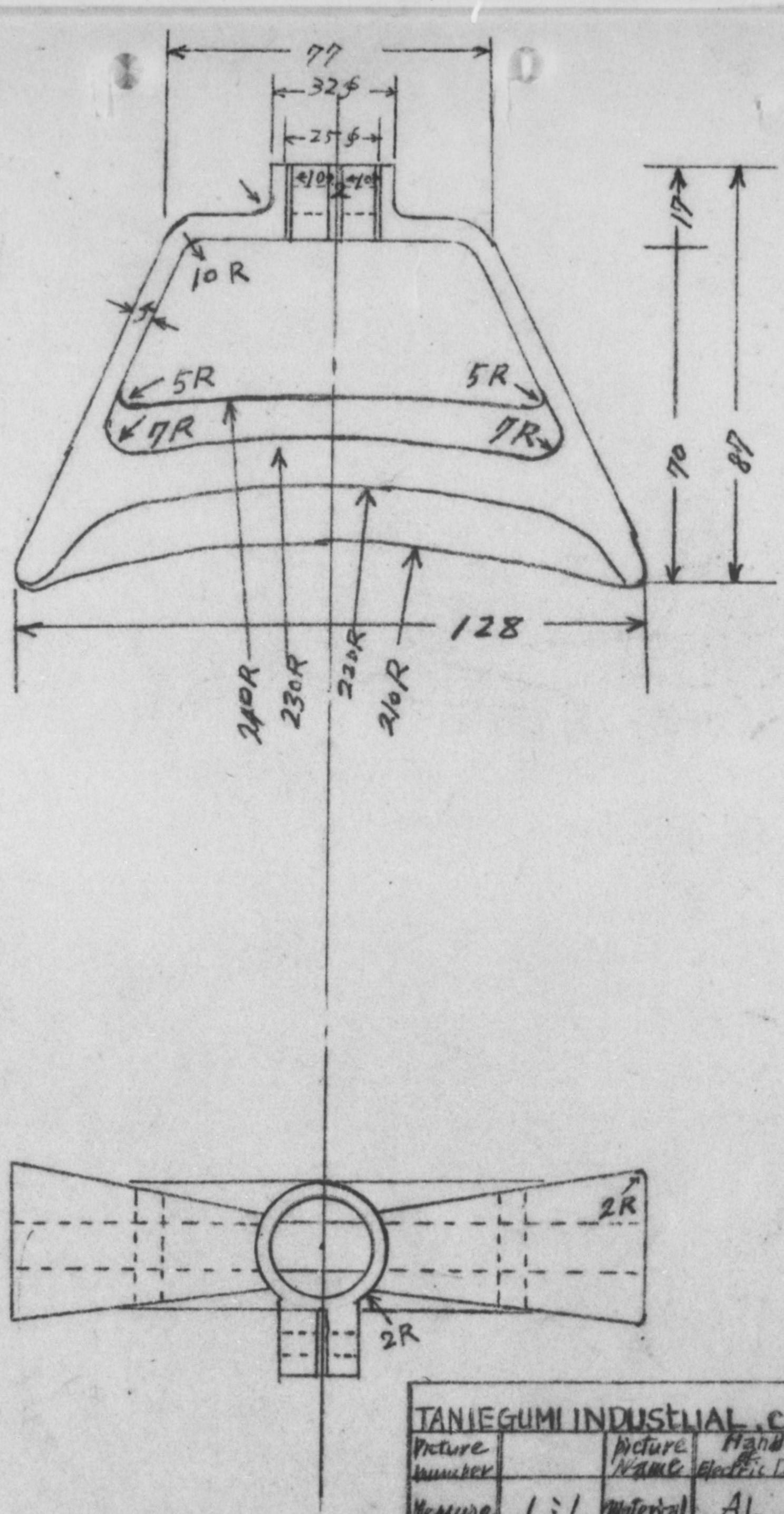

TANIEGUMI INDUSTIAL. CO.			
Picture Number		Picture Name	Handle of Electric Drill
Measure	1 : 1	Material	Al
Number of one set		Weigh	
Drawing			

DECLASSIFIED E.O. 12065 SECTION 3-402/NNDG NO. 15013

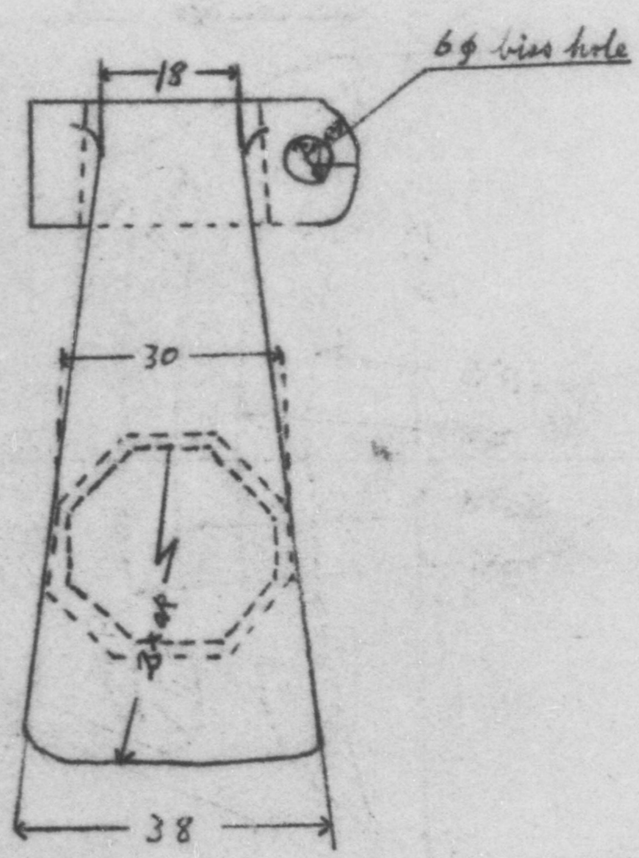

Tanie gumi Industrial L.T.D. co			
Fig. No		Fig. Name	Electric drill handle
Scale	1 = 1	Material	Almognum
Number of 1 set	Miss. one.	Weight	each / total
Drawing		Tracing	

(2)

DECLASSIFIED E.O. 12065 SECTION 3-402/NNDG NO. 175013

(8)

KO-KAN-SHI 4-22

Feb. 6, 1947

To: Chief of Takamatsu Finance Affairs Bureau.

Subject: Investigation into the 2nd class reparation machines designated by the occupation forces.

Sir,

I have the pleasure to report you on the above subject in the attached sheets.

Yours faithfully,

Chief of the Kochi branch of
Takamatsu Finance affairs Bureau.

DECLASSIFIED E.O. 12065 SECTION 3-402/NNDG NO. 175013

9

Kochi Fukko Kogyo K.K.(Kochi Reconstruction Industry Co., Ltd)

LIST ON THE DEFICIENT REQUISITES OF THE 2ND CLASS REPARATION MACHINE

NAME OF MACHINE	NUMBER IN REGISTRATION LIST	DEFICIENT REQUISITES		
		NAME	QUANTITY	CLASSIFICATION
LATHE	20-1(D)-1	CHANGE GEARS	8	NEED TO MAKE NEWLY
		FACE PLATE(LARGE TYPE)	1	
(REMARK)	SEE FIG.A.			

OK.

LIST ON MENDING FOR THE 2ND CLASS REPARATION MACHINE

NAME OF MACHINE	NUMBER IN REGISTRATION LIST	PART WHICH MUST BE MENDED	MATERIAL FOR MENDING			POSSIBILITY FOR MENDING
			NAME	QUANTITY	PRESENCE IN STOCK	
LATHE	20-1(D)-1	CHANGE GEAR	CAST IRON	1	NONE	IMPOSSIBLE
		CHANGE GEAR SUPPORTER	CAST IRON	1	NONE	"

DECLASSIFIED E.O. 12065 SECTION 3-402/NNDG NO. 175013

(10)

Takaoka Tekko Yugen Kaisha(Takaoka Iron Works Limited Co.)

LIST ON THE DEFICIENT REQUISITES OF THE 2ND CLASS REPARATION MACHINES

NAME OF MACHINES	NUMBER IN REGISTRATION LIST	DEFICIENT REQUISITES		
		NAME	QUANTITY NUMBER	CLASSIFICATION
LATHE	20-1(J)-1	~~CHANGE GEARS~~	11	IN STOCK HERE (NEWLY MADE UP TO NOW)
		~~TOOL STOCK~~	1	"
		~~COUNTER(ONE SET)~~	1	"
		CHUCK	1	NEED TO MAKE NEWLY "
LATHE	20-1(J)-2	TOOL STOCK	1	IN STOCK HERE (NEWLY MADE UP TO NOW)
		TAIL STOCK } missing	1	NEED TO MAKE NEWLY
		CHUCK	1	"
		BELT WHEELS	2	ABLE TO GET IN MARKET.

REMARK COUNTOR(20-1(J)-1)...SEE FIG.B. CHUCK (20-1(J)-1..SEE FIG.C.
TAIL STOCK(20-1(J)-2)..SEE FIG.D. CHUCK (20-1(J)-2..SEE FIG.E.

OK

They make milling machines like for making flour & polishing rice,

DECLASSIFIED E.O. 12065 SECTION 3-402/NNDG NO. 175013

(11)

NankainTekko K.K. (Nankai Iron Works Co., Ltd.)

LIST ON THE MACHINES	DEFICIENT REQUISITES OF THE 2ND CLASS REPARATION			
NAME OF MACHINES	NUMBER IN REQUISTRATION LIST	DEFICIENT		REQUISITES
		NAME	QUANTITY	CLASSIFICATION
LATHE	20-1(H)-1	~~COUNTER SHAFT~~	1	NEED TO MAKE NEWTY
		BELT WHEELS	2	"
		STEP WHEEL	1	"
		CHUCK WITH3 ~~Guide~~ nail	1	"
		CHUCK WITH 4 ~~Guide~~ nail	1	"
LATHE	20-1(H)-2	INDUCTION MOTOR	1	NEED TO MAKE NEWTY
		CHUCK WITH 3 nail	1	"
		CHUCK WITH 4 nail	1	"
LATHE	20-1(H)-3	CHUCK WITH 3 nail	1	NEED TO MAKE NEWLY
		CHUCK WITH 4 nail	1	"

Service Bureau

OK Eiwildson

LIST ON MENDING FOR THE 2ND CLASS REPATION MACHINES						
NAME OF MACHINE	NUMBER IN REGISTRATION LIST	PART WHICH MUST BE MENDED	MATERIAL FOR MENDING			POSSIBILITY FOR MENDING
			NAME	QUANTITY	PRESENCE IN STOCK	
LATHE	20-1(H)-1	BELT CHANGER HANDLE	BELT CHANGER HANDLE	1 1	NONE "	POSSIBLE "

DECLASSIFIED E.O. 12065 SECTION 3-402/NNDG NO. 175013

NANKAI TEKKO K.K. (NANKAI IRON WORKS CO., LTD.)

LIST ON THE MACHINES	DEFICIENT REQUISITES OF THE 2ND CLASS REPARATION			
NAME OF MACHINES	NUMBER IN REGISTRATION LIST	DEFICIENT		REQUISITES
		NAME	QUANTITY	CLASSIFICATION
(REMARK)				
BELT WHEEL	(20-1(H)-1)....	SEE FIG.F.	STEP WHEEL	(20-1(H)-1...SEE FIG.G.
INDUCTION MOTOR	(20-1(H)-2.....	SEE FIG.H.	CHUCK WITH 3GUIDE	(20-1(H)-2)...SEE FIG. I. (20-1(H)-3)
CHUCK WITH 4 GUIDE	(20-1(H)-2) (20-1(H)-3)	....SEE FIG.J		

DECLASSIFIED E.O. 12065 SECTION 3-402/NNDG NO. 175013

(13)

Tosa Ringyo Kikai Seisakusho(Tosa Forestry Machine Works)

LIST ON THE DEFICIENT REQUISITES OF THE 2ND CLASS REPARATION MACHINE

NAME OF MACHINE	NUMBER IN REGISTRATION LIST	DEFICIENT REQUISITES		
		NAME	QUAN-TITY	CLASSIFICATION
LATHE	20-1(G)-1	CHANGE GEARS	3.	NEED TO MAKE NEWLY
		"	7.	NEWLY-MADE UP TO NOW

(REMARK) CHANGE GEAR...SEE FIG.K.

OK

DECLASSIFIED E.O. 12065 SECTION 3-402/NNDG NO. 175013

(19)

Tosa Zosen K.K. (Tosa Shipbulding Co., Ltd)

LIST ON THE DEFICIENT REQUISITES OF THE 2ND CLASS REPARATION MACHINES

NAME OF MACHINES	NUMBER IN REGISTRATION LIST	Deficient Requisites NAME	QUANTITY	CLASSIFICATION
LATHE	20-1(I)-1	FEED GEAR	4	NEED TO MAKE NEWLY
		SET BOLT	10	ABLE TO GET IN MARKET
		HANDLE OF TOOL STOCK	1	NEED TO MAKE NEWLY
RADIAL BORING-MACHINE	20-1(I)-2	NO DEFICIENT REQUSITES		
(REMARK)	FEED GEAR(20-1(I)-1...SEE FIG. L. HANDLE OF TOOL STOCK (20-1(I)-1...SEE FIG. M.			

DECLASSIFIED E.O. 12065 SECTION 3-402/NNDG NO. 175013

(15)

Equipment Partner ship

KOCHI MOKKO KOGYO SHISETSU KUMIAI(KOCHI WOODWORKS EQUIPMENT PARTNER-SHIP)

LIST ON THE DEFICIENT REQUISITES OF THE 2ND CLASS REPARATION MACHINE

NAME OF MACHINE	NUMBER IN REGISTRATION LIST	DEFICIENT		REQUSITES
		NAME	QUANTITY	RECLASSIFICATION
LATHE	20-1(E7-1	MAIN SCREWDRIVING SET	1	NEED TO MAKE NEWLY
(REMARK)	AS THIS IS NOT AN ORDINARY-LATHE; IT IS UNCERTAIN THAT WITH WHAT SORT OF APPARATUS THIS WAS EQUIPPED.			

OK

DECLASSIFIED E.O. 12065 SECTION 3-402/NNDG NO. 175013

(14)

Nomura-gumi Kosaku-sho K.K. (Nomura-gumi Works Co., Ltd.)

LIST ON THE DEFICIENT REQUISITES OF THE 2ND CLASS REPARATION MACHINE				
NAME OF MACHINE	NUMBER IN REGISTRATION LIST	DEFICIENT		REQUISITES
		NAME	QUANTITY	CLASSIFICATION
LATHE	20-1(L)-1	CHUCK WITH A GUIDE TOOL	1	IN STOCK HERE
		TOOL HOLDER	1	"

OK

LIST ON-MENDING FOR THE 2ND CLASS REPARATION MACHINE						
NAME OF MACHINE	NUMBER IN REGISTRATION LIST	PART WHICH MUST BE MENDED	MATERIAL FOR MENDING			POSSIBILITY FOR MENDING
			NAME	QUANTITY	PRESENCE IN STOCK	
LATHE	20-1(L)-1	HEAD-STOCK MAIN SPINDLE	THRUST METAL MUST BE REGULATED	1	BE IN STOCK	POSSIBLE "

DECLASSIFIED E.O. 12065 SECTION 3-402/NNDG NO. 175013

(12)

Tou Zosen K.K. (Tou Shipbuilding Co., Ltd.)

LIST ON THE DEFICIENT MACHINE		REQUISITES OF THE 2ND CLASS REPARATION		
NAME OF MACHINE	NUMBER IN REGISTRATION LIST	DEFICIENT		REQUISITES
		NAME	QUANTITY	CLASSIFICATION
LATHE	20-1(C)-1	TAIL STOCK FACE PLATE GEAR FEED HANDLE	1 1 1 1	BE IN STOCK " " "

LIST ON MENDING FOR THE 2ND CLASS REPARATION MACHINE

NAME OF MACHINE	NUMBER IN REGISTRATION LIST	PART WHICH MUST BE MENDED	MATERIAL FOR MENDING			POSSIBILITY FOR MENDING
			NAME	QUANTITY	PRESENCE IN STOCK	
LATHE	20-1(C)-1	SCRAPED, AS TABLE-GUIDE RUSTED SCRAPED, AS BEARING-METAL RUSTED.				

DECLASSIFIED E.O. 12065 SECTION 3-402/NNDG NO. 175013

(18)

Tanie-Gumi Sangyo K.K. (Tanie-Gumi Industry Co., Ltd.)

LIST ON THE DEFICIENT REQUISITES OF THE 2ND CLASS REPARATION MACHINES

NAME OF MACHINES	NUMBER IN REGISTRATION LIST	DEFICIENT REQUISITES		
		NAME	QUANTITY	CLASSIFICATION
ELECTRIC Drill	20-2-3	TAP CHUCK (½") HANDLE	1 1 1	ABLE TO GET IN MARKET " NEED TO MAKE NEWLY
("	20-2-5	HANDLE CHUCK (½")	1 1	NEED TO MAKE NEWLY ABLE TO GET IN MARKET
(REMARK)	THE FIGURES ARE AS SAME 'KO-KAN-SHI	OF TWO HANDLES WHICH MUST BE MADE NEWLY AS THE FIGURE REPORTED IN THE REPORT 4-22.		

LIST ON MENDING FOR THE 2ND CLASS REPARATION MACHINES

NAME OF MACHINES	NUMBER IN REGISTRATION LIST	PART WHICH MUST BE MENDED	MATERIAL FOR MENDING			POSSIBILITY FOR MENDING
			NAME	QUANTITY	PRESENCE IN STOCK	
ELECTRIC Drill	20-2-3	MENDED ALREADY	WIRE (NO.22)	100M		
	20-2-5	"	WIRE (NO.20)	150M		
		"	INSULATED TAPE & THE OTHERS	A LITTLE		

DECLASSIFIED E.O. 12065 SECTION 3-402/NNDG NO. 175013

(19)

Tosa Kanamono Gomei Kaisha(Tosa Metal works Partnership)

LIST ON THE DEFICIENT REQUISITES OF THE 2ND CLASS REPARATION MACHINE

NAME OF MACHINE	NUMBER IN REGISTRATION LIST	DEFICIENT REQUISITES		
		NAME	QUANTITY	CLASSIFICATION
STEAM Hammer	80-1(F)-1	CYLINDER	1	BE IN STOCK
		METAL BED	1	"
		HAMMER	1	"

(REMARK) THE DEFICIENT REQUISITES WERE ARRANGED HERE.

14

Fig. B

20-1(A)-1

Couter Shaft

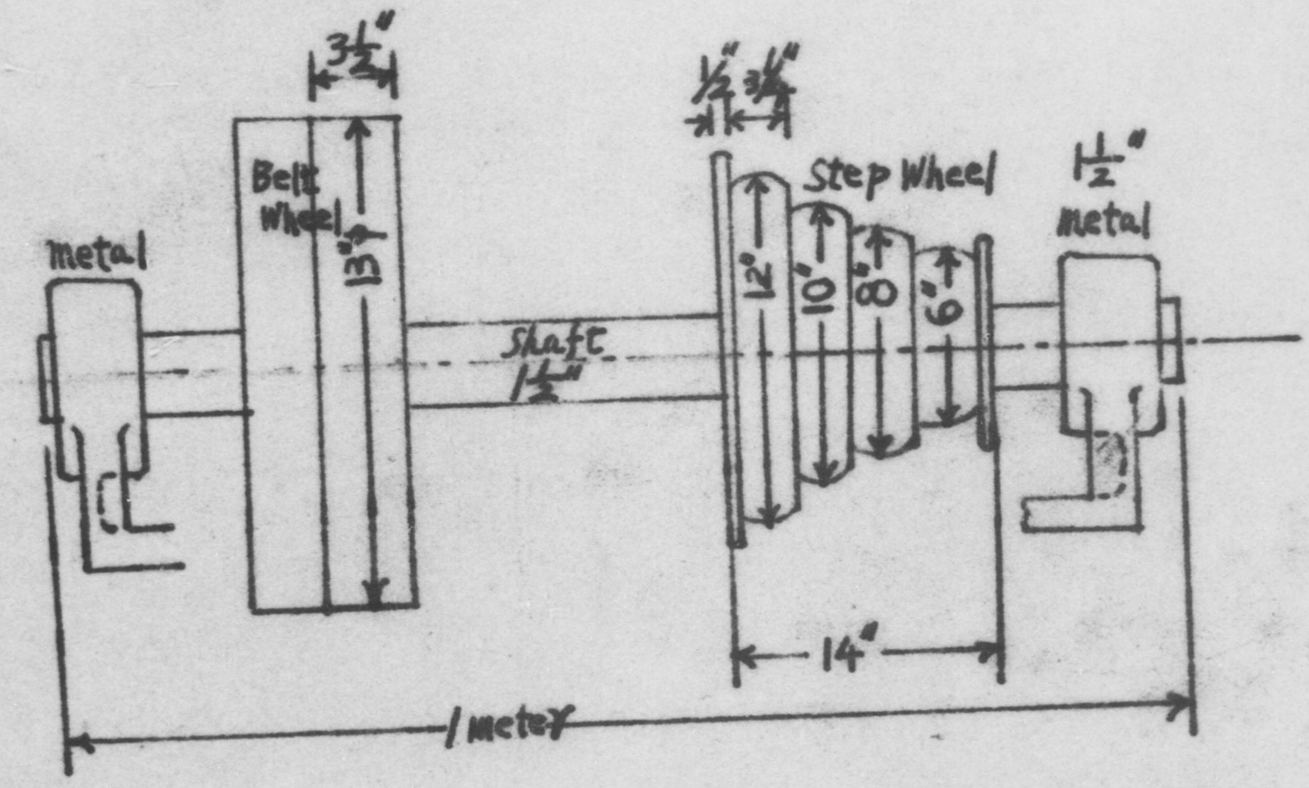

Beltwheel & stepwheer : Cast iron

metal 2. : got in market

Takaoka Iron Works Limited Co.

DECLASSIFIED E.O. 12065 SECTION 3-402/NNDG NO. 150 13

Fig. C. 20-1(D)-1 Chuck

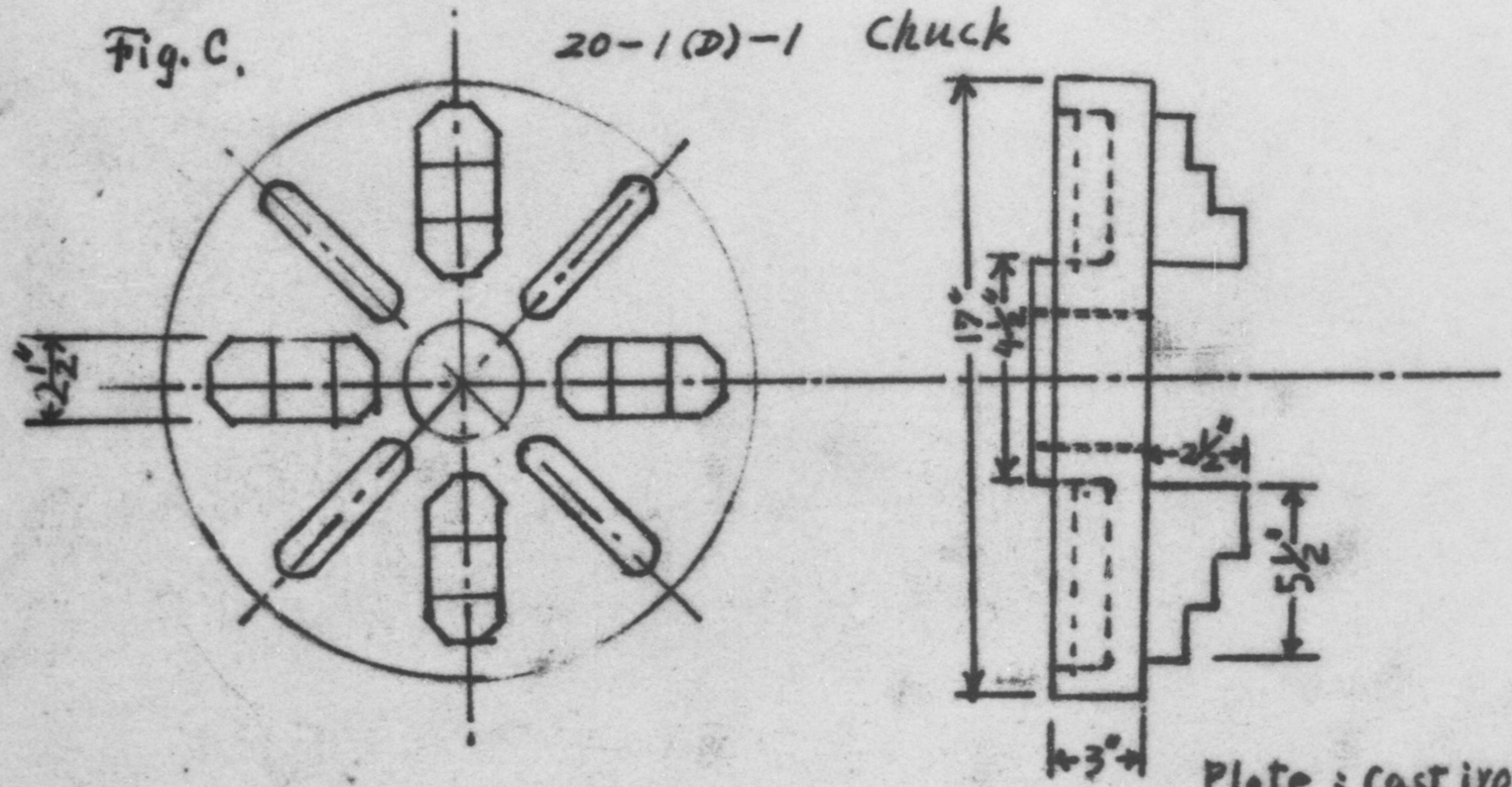

Plate : Cast iron
rail : Soft steel
number: 1 set.

DECLASSIFIED E.O. 12065 SECTION 3-402/NNDG NO. 175013

Fig D

20-1(D)-2 Tail Stock

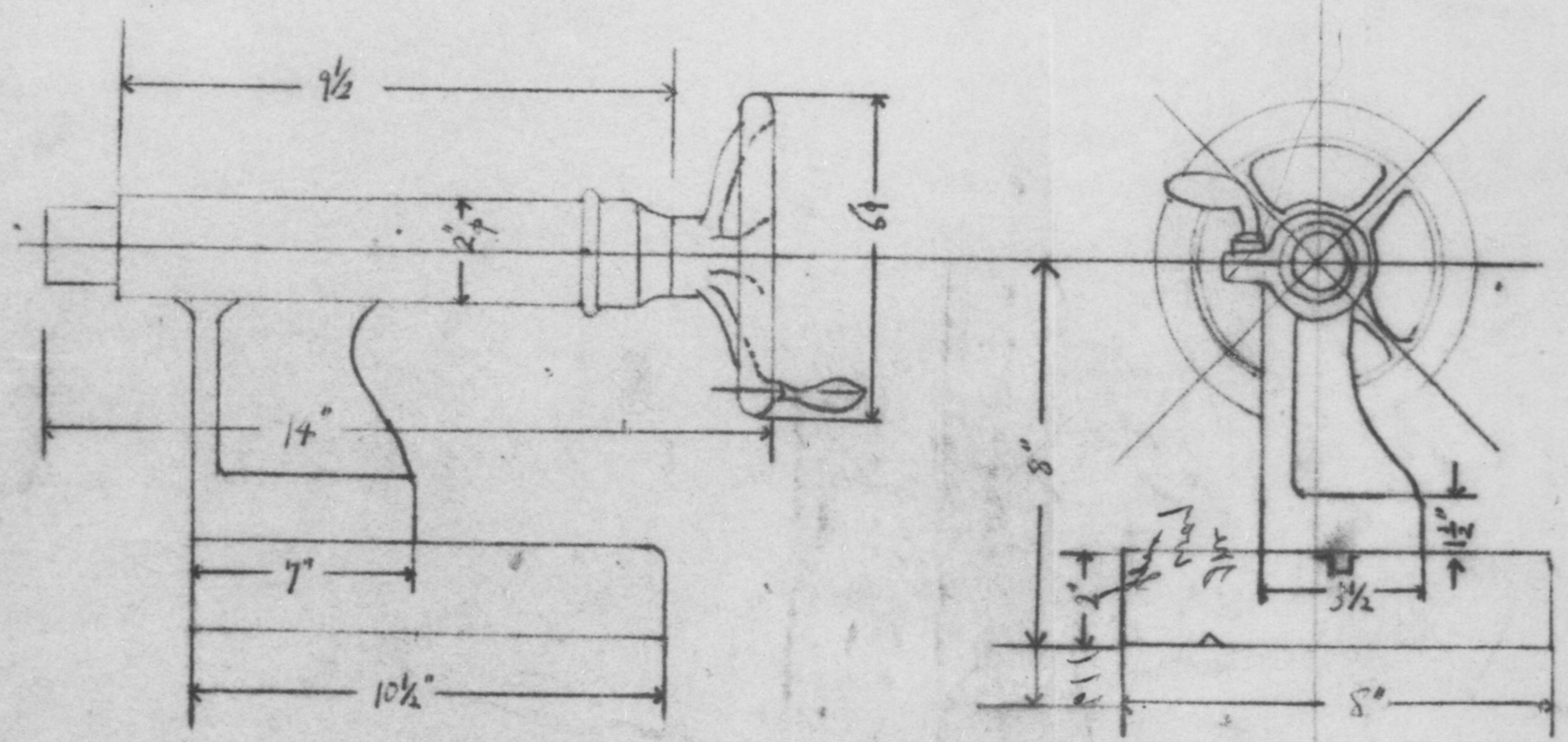

cast iron
number 1 / set

Takaoka iron work limited company

DECLASSIFIED E.O. 12065 SECTION 3-402/NNDG NO. 750013

Fig E

20-1(J)-2 Face plate

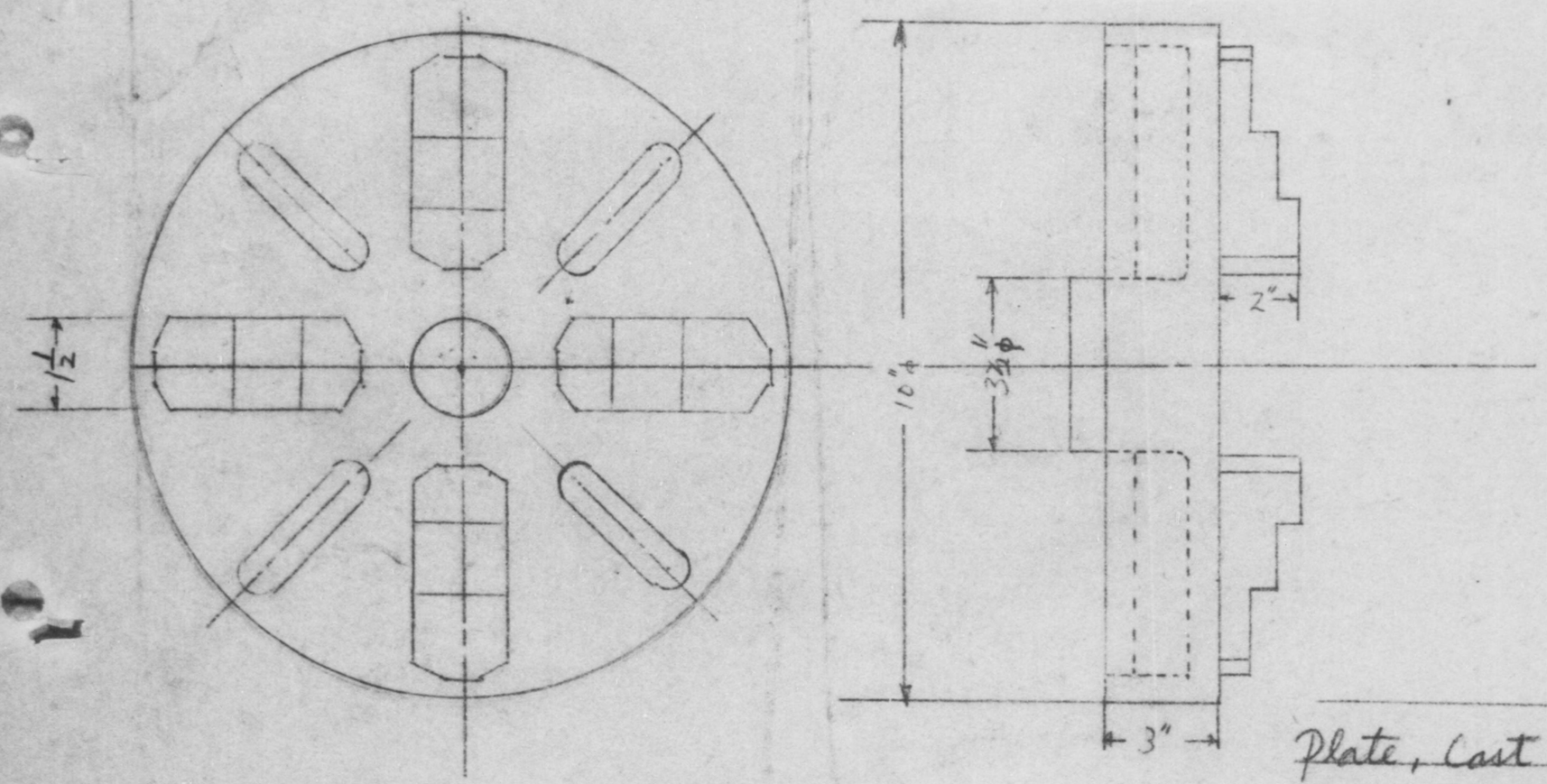

Plate, Cast iron
Nail, Soft iron

number 1 set

DECLASSIFIED E.O. 12065 SECTION 3-402/NNDG NO. 15013

Fig. A.

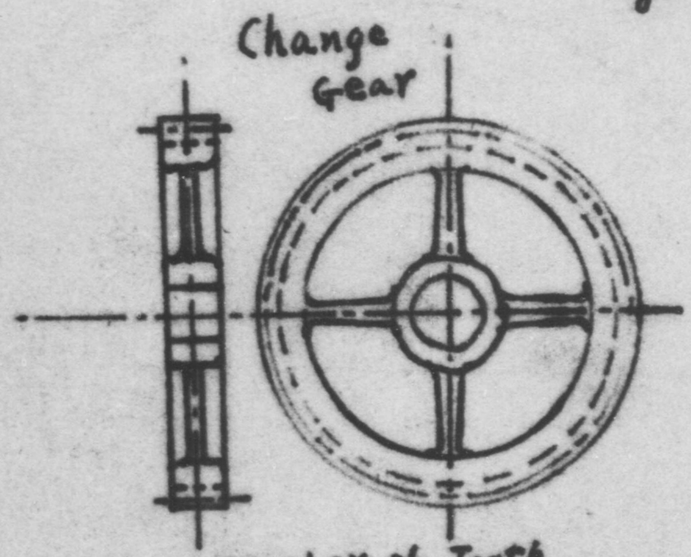

Number of Tooth
25, 30, 35, 45, 50,
70, 120, 127.

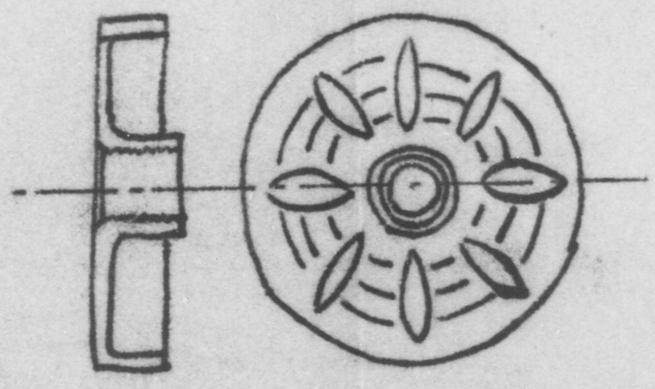

Diameter : 1.5 meter.

DECLASSIFIED E.O. 12065 SECTION 3-402/NNDG NO. 115013

DECLASSIFIED E.O. 12065 SECTION 3-402/NNDG NO. 175013

(25)

Fig F

Belt Wheel

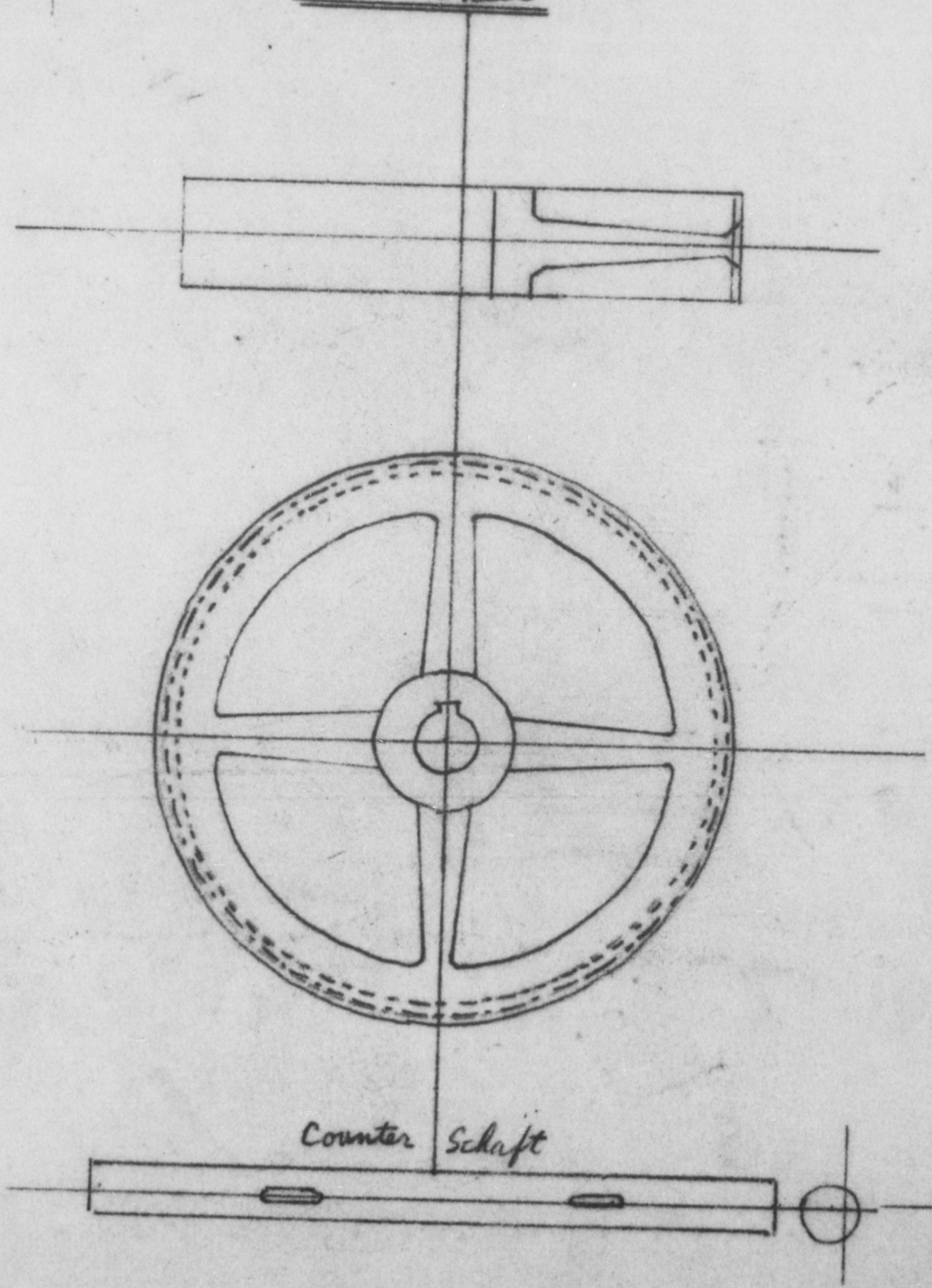

DECLASSIFIED E.O. 12065 SECTION 3-402/NNDG NO. 175013

Fig G

(26)

Step Wheel

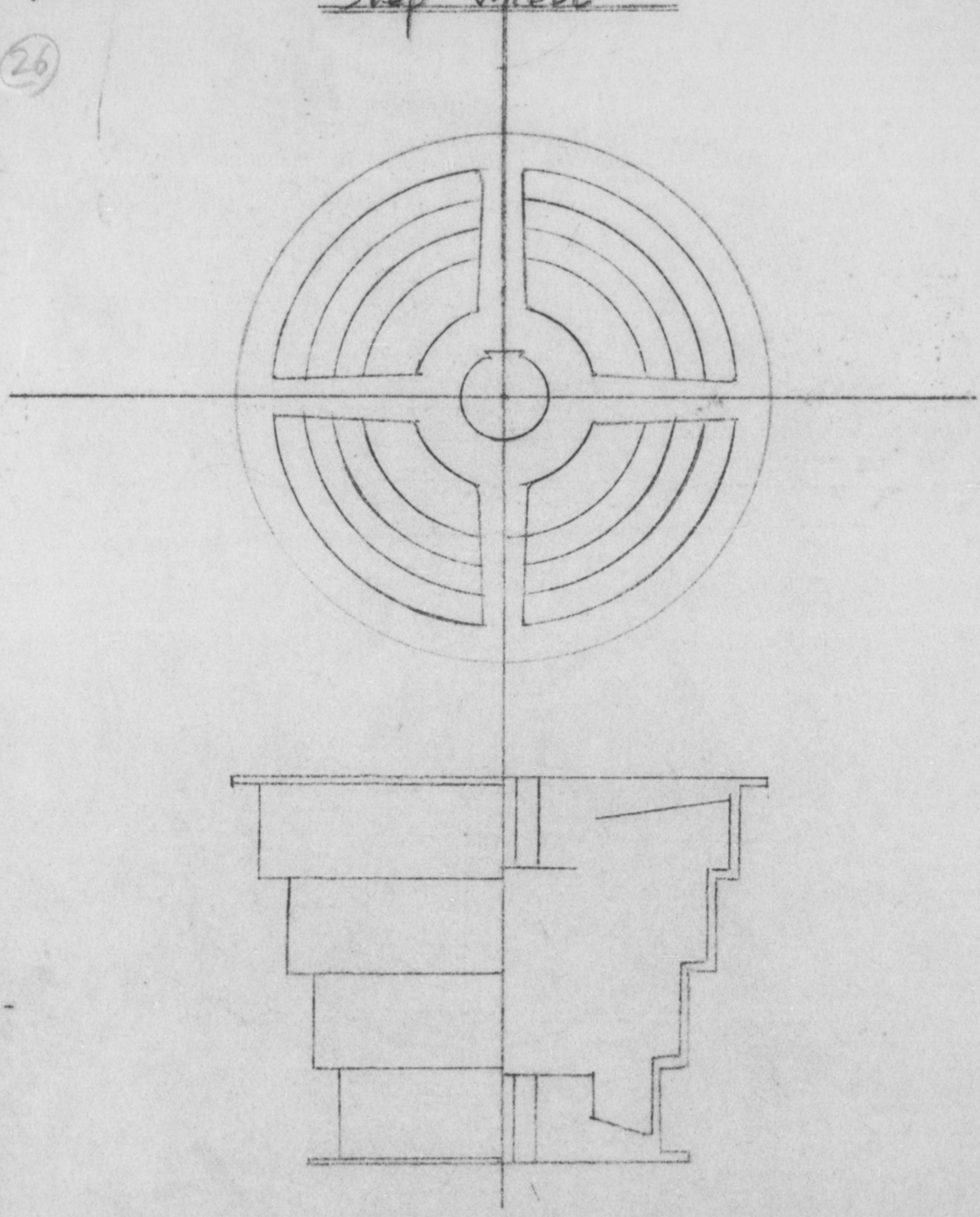

DECLASSIFIED E.O. 12065 SECTION 3-402/NNDG NO. 175013

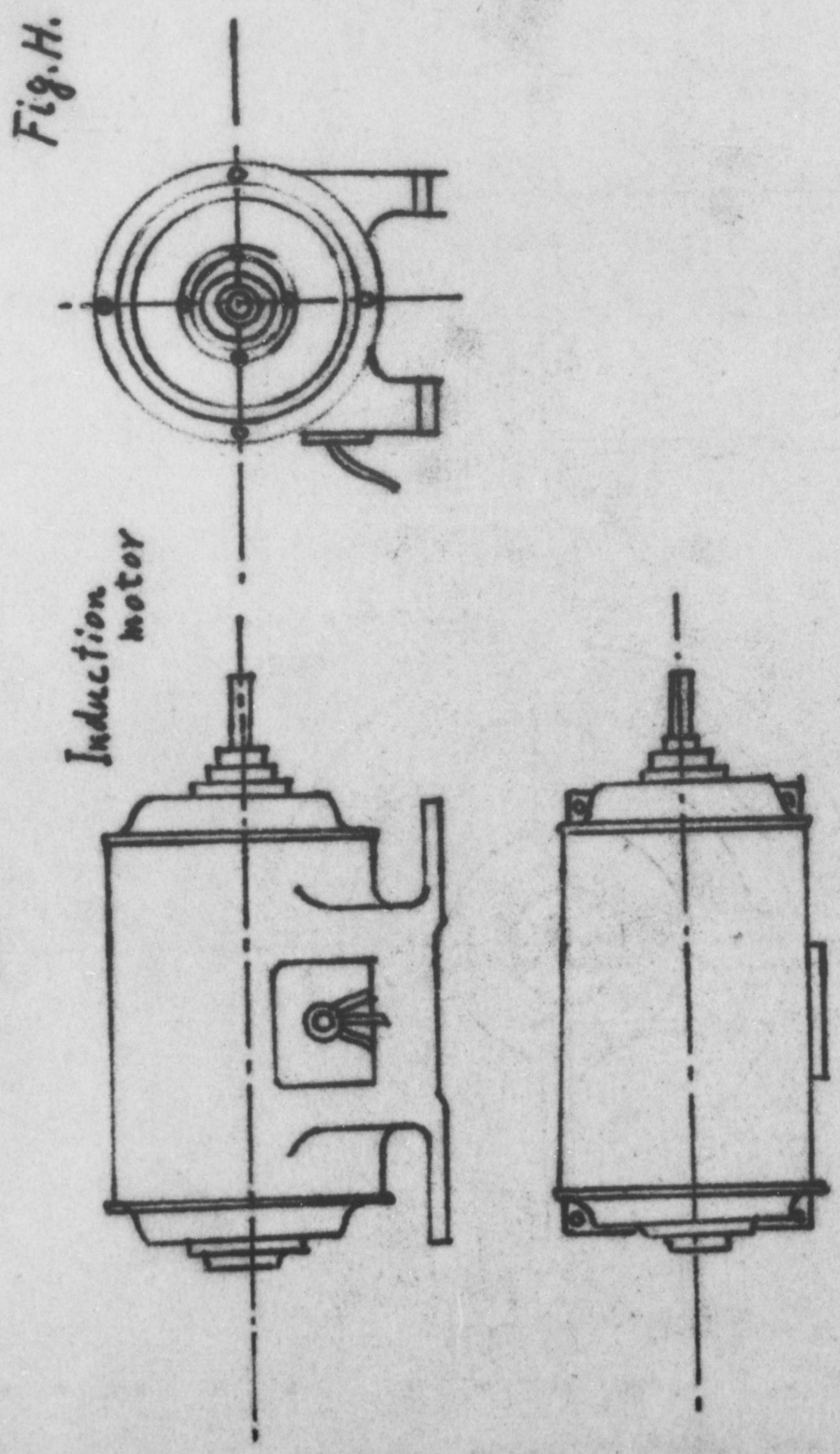

DECLASSIFIED E.O. 12065 SECTION 3-402/NNDG NO. 175013

(28) I

Chuck with three nail

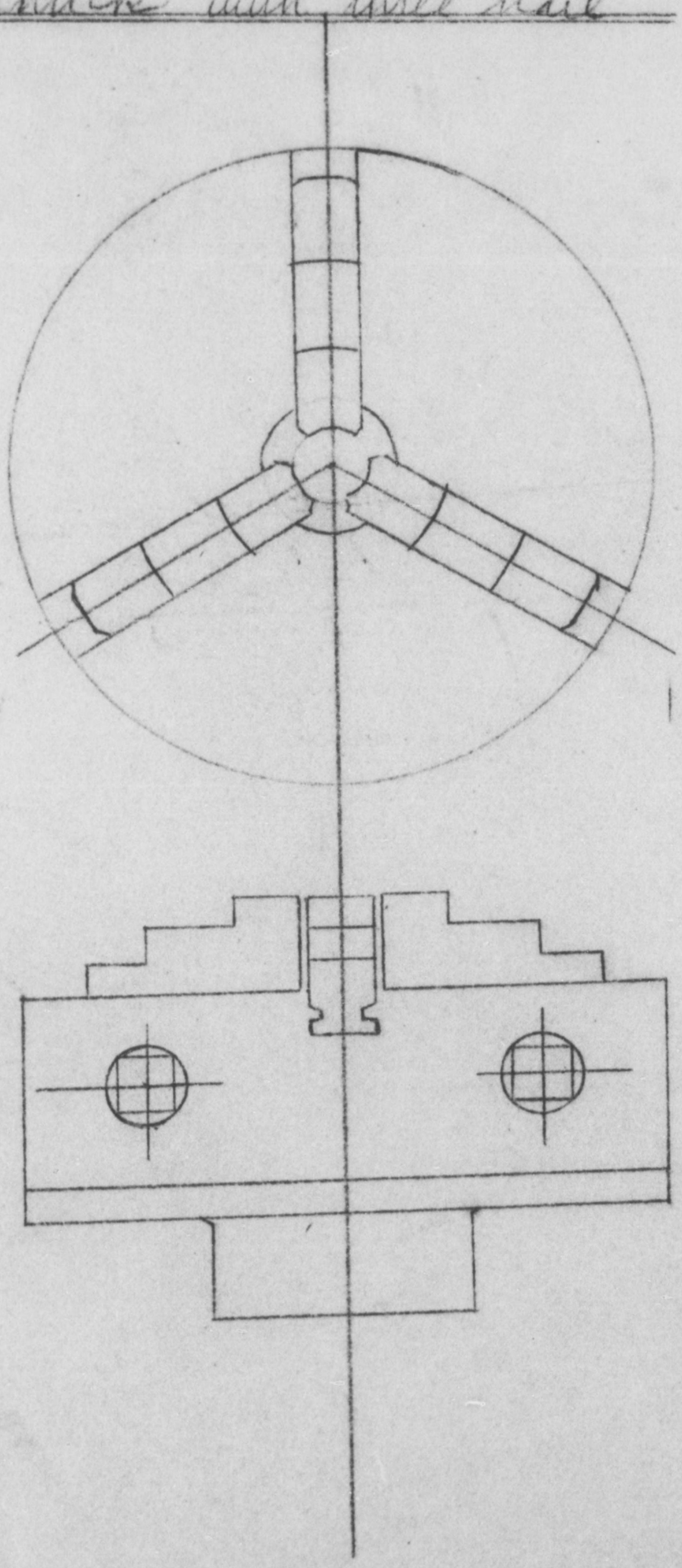

DECLASSIFIED E.O. 12065 SECTION 3-402/NNDG NO. 175013

(29)

J

Chuck with 4 nail

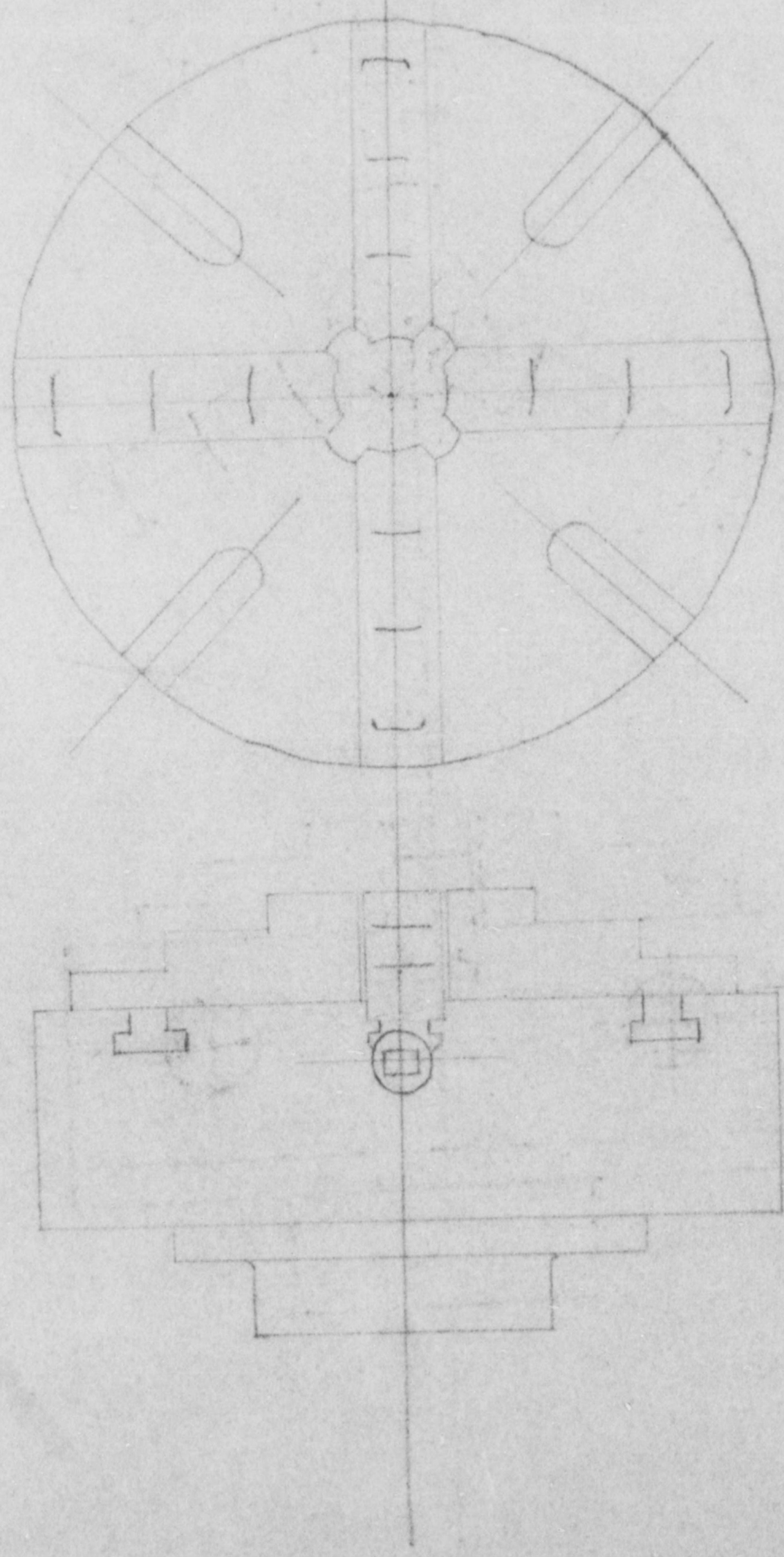

DECLASSIFIED E.O. 12065 SECTION 3-402/NNDG NO. 175013

(30)

Fig. K

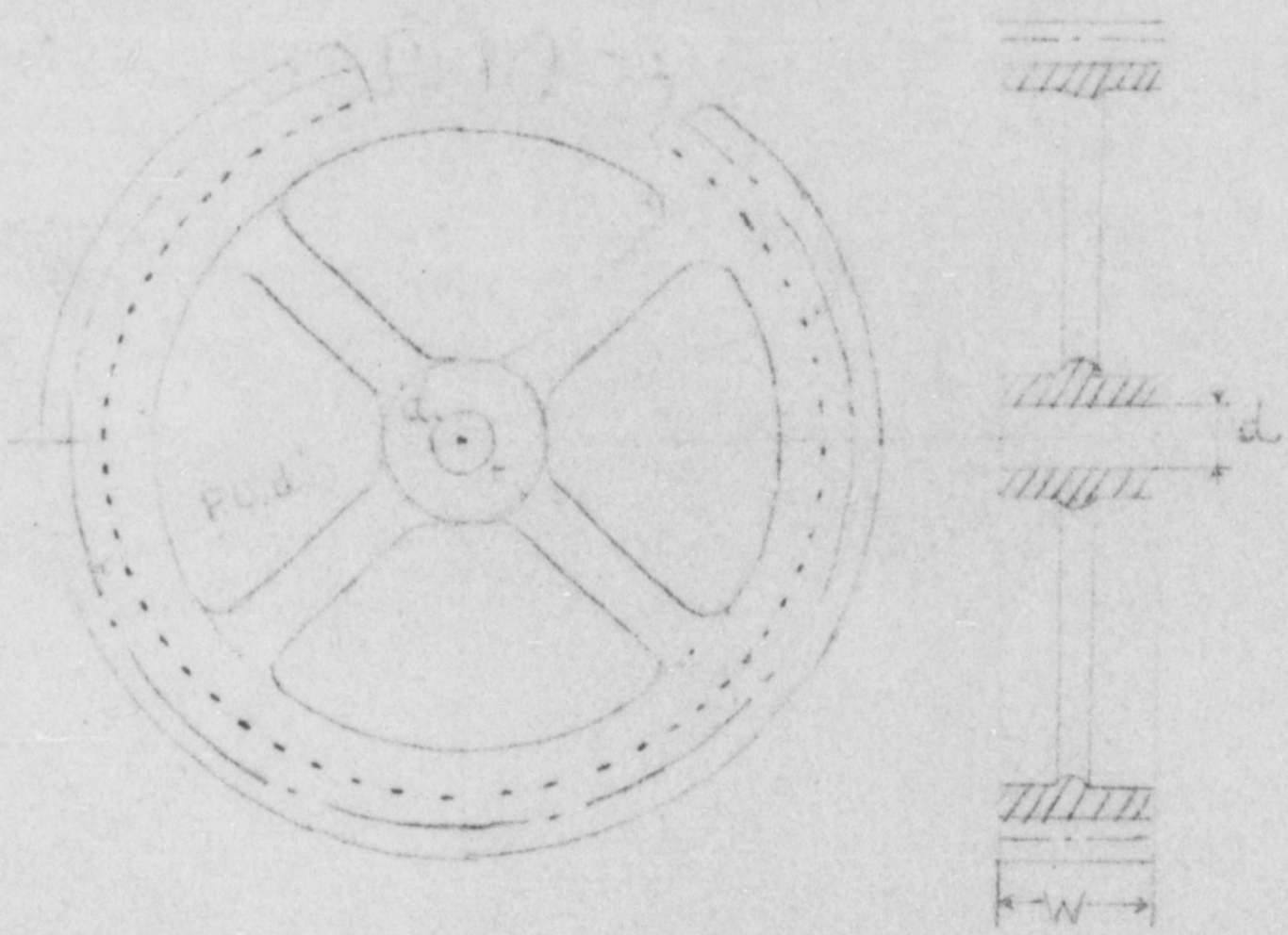

NO.	Pitch dia p.c.d	Number of tooth N	breadth of tooth W	Shaft diameter d	diametral pitch	Number
1	4.167"	25	1½"	1½"	6 P	1
2	7.5"	45	"	"	6 P	1
3	8.333"	50	"	"	6 P	1

DECLASSIFIED E.O. 12065 SECTION 3-402/NNDG NO. 175013

(31)

Fig. 6

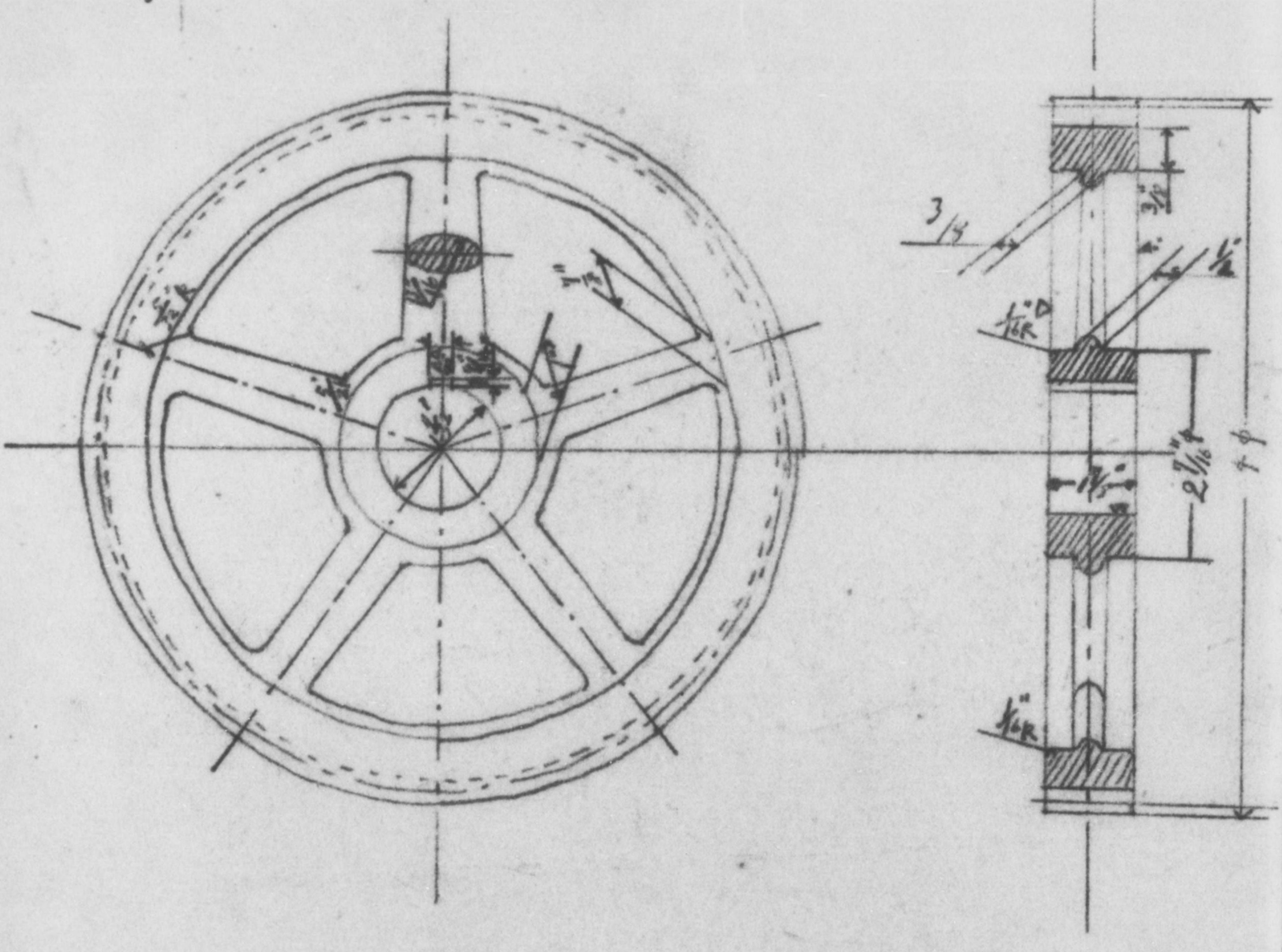

note			
number of tooth	100	110	120
circular pitch D	10"	11"	12"
A P	10.2"	11.2"	12.2"
diametral pitch	10P		
depth	0.2157"		
profile	14 1/2 involute		
number of manufacture	1	1	1

Factory	Tosa ship yard co		
A reduced scale			

DECLASSIFIED E.O. 12065 SECTION 3-402/NNDG NO. 175013

Fig M CHANGE GEAR

(32)

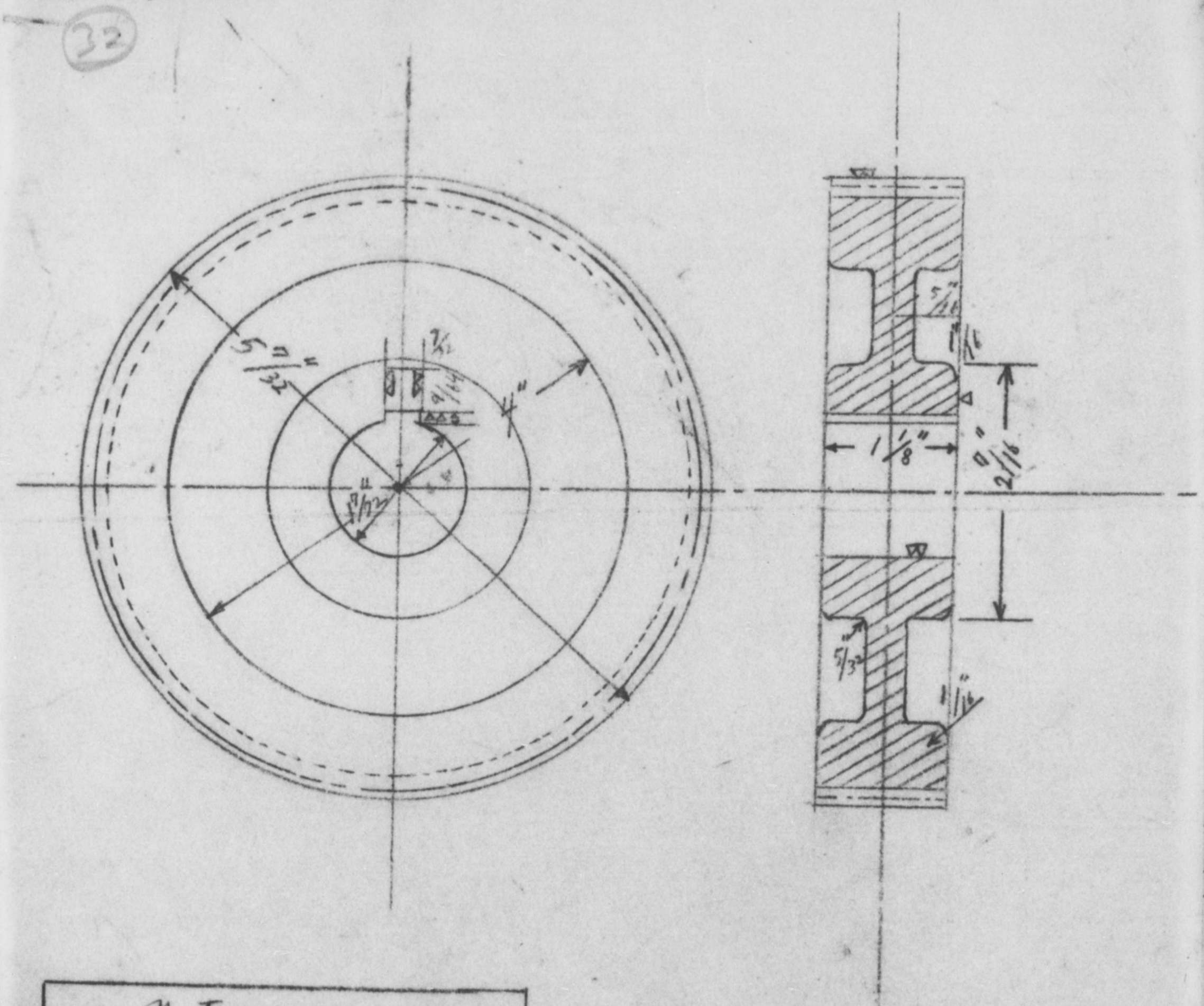

Note	
Number of tooth	50
circular pitch D	5"
diametral pitch	10P
depth	0.2157"
profile	14½° involute

Factory	Tosa ship yard Co		
Scale	1:1	Material	cast
number of manufacture	1		

DECLASSIFIED E.O. 12065 SECTION 3-402/NNDG NO. 175013

(37)

KC-KAN-SHI 4-22

Feb. 6, 1947

To ; Chief of Takamatsu Finance Affairs Bureau.

Subject : Investigation into the 3rd class reparation machines designated by the Occupation Forces.

Sir,

I have the pleasure to report to you on the above subject in the attached sheets.

Yours faithfully,

Chief of the Kochi Branch of
Takamatsu Finance Affairs
Bureau

DECLASSIFIED E.O. 12065 SECTION 3-402/NNDG NO. 175013

(19)

Tanimura Tekkosho(Tanimura Iron Works)

List of The Machines	Deficient Requisites of the 3rd Class Reparation			
~~Nature~~ Name of Machine	Number in Reparation List	Deficient Requisites		
		Name	Quantity	Classification
Lathe	20-1(a)-1	Handle for Chuck	1	Have Need of newly-made article
		Feed Handle	1	"
		Piping Set of Pump for Cutting Lubricant	1	"
		Chuck Nail	1	"
(Remark)	Chuck nails are not in market, so we must request the other special factory out of the prefecture.			

OK

List on mending For The 3rd Class Reparation Machine

Name of Machine	Number in Registration List	Part which must be mended	Material for Mending			Possibility for Mending
			Name	Quantity	Presence in Stock	
Lathe	20-1(a)-1	Handle for Chuck	Steel Bar (2"x2')	1	Be in Stock	Possible
		Feed Handle	" (2"x1')	1	"	"
		Handle (Tool Stock)	" (")	1	"	"
		Piping Set of Pump for Cutting Lubricant	Gas Pipe ($\frac{3}{8}$"x5')	1	"	"
		Chuck Nail	None	None	None	Impossible
(Remark)	The chuck-nail is not in market, and here is no sufficient equipment to make it. So it is the best way to refer to the other special factory out of the prefecture. If we recieved the material for the rest, we would dedicate wothon one and a half months.					

DECLASSIFIED E.O. 12065 SECTION 3-402/NNDG NO. 175013

35

TOSA DENKI SEIKO SHO (Tosa Electric Steel Works Co. Ltd.)

LIST ON THE DEFICIENT REQUISITES OF THE 3RD CLASS REP'N MACHINES

NAME OF MACHINES	NUMBER IN REGISTRATION LIST	DEFICIENT REQUISITES		
		NAME	QUANTITY	CLASSIFICATION
Lathe	20-1(B)-1	None	none	none
Lathe	20-1(B)-2	Tail Stock	1	Need to make newly
		Counter Shaft (one set)	1	"
		Change Gears	30	"
		Handle Levers	10	"
		Bolts	10	"
		Spanners	5	Gettable in market
Lathe	20-1(B)-5	Tail Stock	1	Need to make newly
		Tool Stock	1	"
		COUNTER SHAFT (one set)	1	"
		Change GEARS	30	"
		Handle Levers	10	"
		Bolts	10	"
		Spanners	5	Able to get in market

OK

LIST ON MENDING FOR THE ~~3RD~~ CLASS REPARATION MACHINES

Name of Machines	Number in Registration List	Part Which Must Be Mended	Material for Mending			Possibility for Mending
			Name	Quantity	Presence in Stock	
Lathe	20-1(B)-1 20-1(B)-2 20-1(B)-5	None	None	NONE		

DECLASSIFIED E.O. 12065 SECTION 3-402/NNDG NO. 175013

(38)

Hirata Tekko-sho Gomei Kaisha (Hirata Iron Works Partnership)

LIST ON THE MACHINES	DEFICIENT REQUISITES OF THE 3RD CLASS REPARATION			
NAME OF MACHINES	NUMBER IN REGISTRATION LIST	DEFICIENT		REQUISITES
		NAME	QUANTITY	Classification
TURRET LATHE		FEED GEAR	UNCERTAIN	
		SEAT ADJUSTING NAIL	1	
		SEAT ADJUSTING HANDLE	1	
		BOLT($\frac{5''}{16}$)	2	
		" ($\frac{1''}{4}$)	2	
		UNDER TOOL HOLDER	1	
		" HANDLE	1	
		SQUARE TOOL HOLDER(TOOL STOCK	1	
		" BOLT	4	
		" HANDLE	1	

All removable parts not marked

Maintenance - fair

DECLASSIFIED E.O. 12065 SECTION 3-402/NNDG NO. 115013

(32)

Hirata Tekko-sho Gomei Kaisha (Hirata Iron Works Partnership)

LIST ON THE DEFICIENT REQUISITES OF THE 3RD CLASS REPARATION MACHINES

NAME OF MACHINES	NUMBER IN REGISTRATION LIST	DEFICIENT REQUISITES		
		NAME	QUANTITY	CLASSIFICATION
TURRET LATHE		GUIDE ADJUSTING	2	
		" KEY	10	
		BOLTS($\frac{1}{4}$)		
		BOLTS FORADJUSTING GUIDE	10	
		CHUCK FOR HEAD STOCK	1	
		OIL PIPING SET	1	
(REMARK)	THERE ARE THE OTHER DEFICIENT REQUISITES, BUT THEY ARE UNCERTAIN. WE SET THIS TURRET LATHE FROM THE SCRAPS WHICK HAD BURNT BY THE CALAMITY OF THE WAR. SO WE CANNOT MAKE IT AGAIN.			

DECLASSIFIED E.O. 12065 SECTION 3-402/NNDG NO. 115013

(38)

Uemura Tekko-sho K.K.(Uemura Iron Works Co., Ltd.)

LIST ON THE DEFICIENT REQUISITES OF THE 3RD CLASS REPARATION MACHINES

NAME OF MACHINES	NUMBER IN REGISTRATION LIST	DEFICIENT REQUISITES		
		NAME	QUANTITY	CLASSIFICATION
LATHE	20-1-1	MAIN SHAFT (WITH CENTRE THRUST BEARING)	1	NEED TO MAKE NEWLY
		STEP WHEEL	1	"
		MAIN BEARING COVER	2	"
		MAIN SCREW	1	NOT ABLE TO MAKE HERE
		CHANGE GEAR	1	"
		BACK GEAR HANDLE	1	NEED TO MAKE NEWLY
		FACE PLATE	1	"
		TOOL SUPPORTER	1	"
		TOOL STOCK	1	"
		Half Nut & Handle	1	"

LIST ON MENDING FOR THE 3RD CLASS REPARATION MACHINES

NAME OF MACHINES	NUMBER IN REGISTRATION LIST	PARTS WHICH MUST BE MENDED	MATERIAL FOR MENDING			POSSIBILITY FOR MENDING
			NAME	QUANTITY	PRESENCE IN STOCK	
LATHE	20-1-1	MAIN SHAFT (WITH CENTRE THRUST BEARING)	STEEL BAR	35KG	NONE	IMPOSSIBLE
		STEP WHEEL	CAST IRON	50 "	"	"
				30 "		
		MAIN BEARING COVER	COKES "	18 "	"	"
				14 "	"	"
		MAIN SCREW	STEEL BAR	25 "	"	"
			CAST IRON	80 "	"	"
		CHANGE GEAR	COKES	40 "	"	"
		BACK GEAR HANDLE	STEEL	2 "	"	"

DECLASSIFIED E.O. 12065 SECTION 3-402/NNDG NO. 115013

(39)

UEMURA TEKK-SHO K.K. (Uemura Iron Works Co. Ltd.)

LIST ON THE DEFICIENT REQUISITES OF THE 3RD CLASS REPARATION MACHINES

Name of Machines	Number in registration list	DEFICIENT REQUISITES		
		Name	Quantity	Classification
LATHE	20-1-1	Half Nut & Handle	1	Need to make newly
		Counter Driving set	1	
LATHE	20-1-2	Main Bearing Metal (White Metal)	2	"
		Bolt for Setting Cover of Main Bearing	2	"
		Chuck Nail & Socket Chaser	1	Not able to make
		Handle For Rotating Turret	1	Need to make newly
		Stop Handle "	1	"
		Chuck Lever Set	1	"
		Counter Driving Set	1	"
LATHE	20-1-3	Whole set except Bed	1	"

LIST ON MENDING FOR THE 3rd CLASS REPARATION MACHINES

Name of Machines	Number in Registration List	Part which must be mended	Material for mending			Possibility for mending
			Name	Quantity	Presence in Stock	
LATHE	20-1-1	Face Plate	Cast Iron Cokes	50kg 25kg	None	Impossible
		Tool Supporter	Cast Iron Steel	20kg 15kg	"	"
		Tool Stock	Cast Iron Steel	15kg 5kg	"	"
		Half Nut & Handle	Cast Iron Steel	8kg 3kg	"	"
		Counter Driving Set	Cast Iron Steel	70kg 20kg	"	"
LATHE	20-1-2	Main Bearing Metal (White Metal)	White Metal	8kg	"	"
—		Bolt for Setting Cover of Main Bearing	Steel Bar	1kg	"	"

DECLASSIFIED E.O. 12065 SECTION 3-402/NNDG NO. 115013

UEMURA TEKKO-SHO (Uemura Iron Works Co., Ltd.)

LIST ON THE DEFICIENT REQUISITES OF THE 3RD CLASS REPARATION MACHINES

Name of Machines	Number in Registration List	Deficient Requisites		
		Name	QUANTITY	Classification
LATHE	20-1-4	Handle & Toothed Wheel for Traversing Feed	1	Unable to make
LATHE	20-1-4	Counter Driving Set (Except Step Wheel)	1	Need to make newly
		Face Plate & Automatic Feed Gear	1	Unable to make
		Traversing Feed Set	1	"

OK

LIST ON MENDING FOR THE 3RD CLASS REPARATION MACHINES

Name of Machines	Number in Registration List	Part which must be mended	Material for Mending			Possibility for mending
			Name	Quantity	Presence in Stock	
Lathe	20-1-2	~~Main bearing metal~~ Chuck Nail & Scket Chaser	Carbon Steel	25kg	None	Impossible
		Handle for Rotating Turret	Steel	5kg	"	"
		Stop Handle for ø "	"	3kg	"	"
		Chuck Lever Set	"	10kg	ø"	"
		Counter Driving Set	Cast Iron	75kg	"	"
			Steel	20kg		
Lathe	20-1-3	Whole Set except Bed				
Lathe	20-1-4	Handle and Toothed Wheel for Traversing Feed	Steel	54kg		

DECLASSIFIED E.O. 12065 SECTION 3-402/NNDG NO. 115013

INFORMATION COPY

MAR 17 1947

HEADQUARTERS EIGHTH ARMY
United States Army
Office of the Commanding General
APO 343

AG 004 (MG-Em)

14 MAR 1947

SUBJECT: Return of Inventory Sheets for Correction

TO : CO, ...Kochi..... Military Government Team , APO 317

1. Transmitted herewith are inventory sheets, to be corrected as indicated and returned directly to General Headquarters, Supreme Commander for the Allied Powers (Attn: Office of the Executive for Reparations), APO 500, for the following plants:

. . . . . 20-01 (I) . . . . . .

. . . . . 20-01 (J) . . . . . .

. . . . . .

. . . . . .

. . . . . .

. . . . . .

. . . . . .

. . . . . .

BY COMMAND OF LIEUTENANT GENERAL EICHELBERGER:

R. Schaefer

R SCHAFER
Lt Col, AGD
Asst Adj Gen

RECORDED

1 Incl: 4 Inv. sheets

Info to: I Corps
IX Corps
Shikoku Reg.
Chugoku Reg.
Tokyo-Kanagawa MG Dist.

INFO COPY TO CO SHIKOKU MG REGION

INFORMATION COPY

DECLASSIFIED E.O. 12065 SECTION 3-402/NNDG NO. 115013

Information Copy

HEADQUARTERS EIGHTH ARMY
United States Army
Office of the Commanding General
APO 343

17 March 1947

AG 004 (MG-Em)

SUBJECT: Return of Inventory Sheets for Correction

TO : CO, Kochi Military Government Team APO 317

1. Transmitted herewith are inventory sheets, to be corrected as indicated and returned directly to General Headquarters, Supreme Commander for the Allied Powers (Attn: Office of the Executive for Reparations:, APO 500, for the following plants:

. . . . . 20-1 (c) . . . . . .

BY COMMAND OF LIEUTENANT GENERAL EICHELBERGER:

/s/ R Schafer
/t/ R SCHAFER
Lt Col, AGD
Asst Adj Gen

Info to: I Corps
IX Corps
Shikoku Reg.
Chugoku Reg.
Tokyo-Kanagawa MG Dist.

Incl: 1 inv. sheet

DECLASSIFIED E.O. 12065 SECTION 3-402/NNDG NO. 115013

HEADQUARTERS GVO/jk
KOCHI MILITARY GOVERNMENT TEAM
Kochi, Shikoku
APO 317

18 April 1947

SUBJECT: Correction of Plant Code Number

THROUGH: Commanding Officer, Shikoku Mil Govt Region
Hq & Hq Det., APO 317

TO : COMMANDING GENERAL, Eighth Army, APO 343
Attn: Military Government Section

1. Transmitted herewith is the correction of plant code number for dispersed reparation machines at Kamimura Iron Works. The original plant cover sheet code number 20-01 has been changed to read 20-01 (M).

/s/Chester D. Haisley
/t/CHESTER D. HAISLEY
Lt. Colonel, Infantry
Senior Mil Govt Officer

Incl: Two (2) Corrected Plant Cover Sheets.

DECLASSIFIED E.O. 12065 SECTION 3-402/NNDG NO. 115013

Reparations

Lt Giles

Basic: Ltr, Kochi Mil Govt Team, APO 317, dtd 18 Apr 47, subj: "Correction of Plant Code Numbers."

AG 004 1st Ind JBG/CHB/mm

Shikoku Mil Govt Region Hq & Hq Det, APO 317, 28 April 1947

TO: Commanding General, Eighth Army, APO 343
Att: Military Government Section

FOR THE COMMANDING OFFICER:

1 Incl:
n/c

CHARLES H. BACK
Captain, AC
Adjutant

DECLASSIFIED E.O. 12065 SECTION 3-402/NNDG NO. 115013

HEADQUARTERS EIGHTH ARMY
United States Army
Office of the Commanding General
APO 343

Reparations

JUL 7 1947

AG 004 (MG-Em)

JUL 1947

SUBJECT: Return of Inventory Sheets for Correction.

TO : CO, ...Kochi..... Military Government Team, APO 317

1. Transmitted herewith are inventory sheets, to be corrected as indicated and returned directly to General Headquarters, Supreme Commander for the Allied Powers (Attn: Office of the Executive Reparations), APO 500, for the following plants:

.....20-01.(F).....

BY COMMAND OF LIEUTENANT GENERAL EICHELBERGER:

H. SCHAFER
Lt. Col., AGD
Asst. Adjutant General

1 Incl. 1 Inv. Sheet

Info to: I Corps
IX Corps
Shikoku Reg.
Chugoku Reg.
Tokyo-Kanagawa MG District

INFO COPY TO CO SHIKOKU REG.

INFO

DECLASSIFIED E.O. 12065 SECTION 3-402/NNDG NO. 115013

HEADQUARTERS
KOCHI MILITARY GOVERNMENT TEAM
APO 317

WBW/eo

AG 004 (C & I)

11 July 1947

SUBJECT: Use of Japanese Army and Navy Arsenal Machinery on Reparations.

TO : Commanding General
Eighth Army
APO 343
Attention: Military Government Section.

1. Reference:

a. Radiogram, CG, Eighth Army, Cite: (DX99895) (MG Team).

b. Ltr., Shikoku Military Government Region, file AG 004, Subject: "Report on Japanese Army and Navy Arsenal Machinery on Reparations," dated 26 June 1947.

2. In compliance with par 1 a, reference 1b, above, transmitted herewith is a list of all dispersed Reparation Machinery now in use in Kochi Prefecture.

Name of Company	Code No.	Machine Type
Tosa Steel Mill	20-1 (b)-1	14' Lathe
	20-1 (b)-3	14' Lathe
	20-1 (b)-4	14' "
Tou Shipbuilding Co.	20-1 (c)-1	6' "
Kochi Industrial Rehabilitation Co.	20-1 (d)-1	10' "
Kochi Woodenware Industry Enterprise Association	20-1 (e)-1	6' "
Tosa Hardware Partnership	20-1 (f)-1	3/4 ton Steam Hammer
Tosa Forestry Ma chine Works	20-1 (g)-1	12' Lathe
Nankai Iron Works	20-1 (h)-1	4.5' Lathe
Takaoka Iron Works	20-1 (j)-1	8' "
	20-1 (j)-2	8' "
Nomura Work Shop	20-1 (l)-1	8' "

CHESTER D. HAISLEY
Lt. Col., Infantry
Commanding

Information Copy to:
Shikoku Military Government Region

DECLASSIFIED E.O. 12065 SECTION 3-402/NNDG NO. 75013

Kochi - Disp Mach
Glasgow

HEADQUARTERS WBW/yi
KOCHI MILITARY GOVERNMENT TEAM
APO 317

AG 004 (C & I) 24 July 1947

SUBJECT: Application for the Release of Reparation Machine (20-1 (f)-1)

THROUGH: Commanding Officer
Shikoku Military Government Region
APO 317

TO: Commanding General
Eighth Army
APO 343

1. Reference:

(a) Memorandum for the Imperial Japanese Government, General Headquarters, Supreme Commander for the Allied Powers, AG 004 (20 Jan. 46) ESS/GD SCAPIN (629) dated 20 January 1946.

(b) Letter, Hq Eighth Army, file AG 004 (MG-Em), subject, "Letter of Transmittal," dated 14 January 1947.

2. Reference 1 a-b above were authorization for placing machine number 20-1 (f)-1 on reparation.

3. The Tosa Hardware Co., Oksuue-mura, Kami-gun, in 1936 borrowed from the Kure Naval Arsenal a three-quarter (3/4) ton steam hammer for use in its plant in Oksuue-mura. The machine manufactured in 1895, required repair when received, and the Tosa Hardware Co., furnished labor and material at an estimated cost of 1,500 yen. The machine has been in use since that time, including the war period, in the production of farming and forestry tools. At the present time this company produces about twenty (20) percent of the farm and forestry tools in the prefecture. Of the total production of farm tools in the prefecture approximately forty (40) percent are being exported.

4. According to estimates by plant officials, loss of this machine would cut the productive capacity of the plant by at least sixty (60) percent. The loss would also mean complete production stoppage of certain types of heavier farm and forestry equipment which the one-eighth(1/8) ton steam hammer, also owned by the plant, is not physically capable of producing.

5. In view of the age of the machine and its importance to the economy of the Prefecture it in recommended that the

3823

DECLASSIFIED E.O. 12065 SECTION 3-402/NNDG NO. 175013

~~Hold file~~ Reparations JBG

inclosed application be given favorable consideration.

1 Incl:
1. Japanese Application For Release of Machine

CHESTER D. HAISLEY
Lt. Col., Infantry
Commanding

AG 004.04 1st Ind. JBG/[illegible]/rw
29 July 1947

HEADQUARTERS, Shikoku Military Government Region, APO 317.

TO: Commanding General, Eighth Army, APO 343.
(Attn: Military Government Section)

Recommend approval of application for removal from reparations list of steam hammer, 20-1 (f) -1, dispersed from Kure Naval Arsenal.

FOR THE COMMANDING OFFICER:

ELWOOD T. ROUSE
Major, FA
Executive Officer.

1 Incl:
n/c

3823

DECLASSIFIED E.O. 12065 SECTION 3-402/NNDG NO. 175013

Reparations
Glasgow

BASIC: Ltr, Hqs Kochi Mil Govt Team, APO 317, subj: "Application for the Release of Reparation Machine (20-1(f)-1)" dtd 24 July 1947.

AG 386.3 (MG-Em) 2nd Ind 25 Aug 1947

Headquarters Eighth Army, APO 343

TO: Commanding Officer, Shikoku Military Government Region, APO 317.

1. The continued use pending reparations removal of the steam hammer borrowed from the Kure Naval Arsenal by the Tosa Hardware Company, Kochi Prefecture, is authorized pending reparations removal.

2. When reparations removals are effected, consideration can be given to this application and decision made as to exemption from removal.

BY COMMAND OF LIEUTENANT GENERAL EICHELBERGER:

s/ R. Schafer
t/ R. SCHAFER
Lt. Col. AGD
Asst. Adjutant General

1 incl:
N/c

AG 386. 3 3rd Ind JBG/CHB/rw
30 August 1947

HEADQUARTERS, Shikoku Military Government Region, APO 317.

TO: Commanding Officer, Kochi Military Government Team, APO 317.

Attention is invited to the 2nd indorsement.

BY ORDER OF COLONEL PORTER:

CHARLES H. BACK
Captain, AC
Adjutant.

1 incl:
n/c

DECLASSIFIED E.O. 12065 SECTION 3-402/NNDG NO. 175013

June 2, 1947

To Commanding Officer of
Kochi Mil. Gov't Team

Petition for release of the reparation machine

Sir:

You are very cordially request to release the reparation machine for the reason mentioned in the attached sheet.

Yours sincerely,

/s/ Ichiro Noshima

Ichiro Noshima
Representative of
"Tosa Kanamono Gomei Kaisha"
(Tosa Hardware Co.)

Okusuue-mura, Kami-gun
Kochi Pref.

This is a certified true copy.

Fred M. Grant

FRED M. GRANT
Maj. Infantry

3823
Incl 13

DECLASSIFIED E.O. 12065 SECTION 3-402/NNDG NO. 175013

A. Name, type, no., class and maker of the machine;

Steam hammer (3/4 ton)
20 - 1 (F)-1
1st class
B. S. Smassey, Manchester, England.

B. Name and location of the plant keeping the machine;

Tosa Kanamono Gomei Kaisha (Tosa Hardware Co.)
Okusuue-mura, Kami-gun, Kochi Pref.

C. Source of the machine and way of its procurement;

Around 1936, the machine was being kept, disused, at Kure Naval Arsenal. We borrowed the body and bed of the machine and provided the parts to use it.

D. Use of the machine in war time;

Making farming tool, forest cutting tool, earthwork tool manufactured at Kure Naval Arsenal, or artisan's tool.

E. Use of the machine in post-war time;

1. Since permission was obtained for reconversion to civil industry.

Making farming tool, forest cutting tool, and earthwork tool.

2. Use in future.

Making farming tool, forest cutting tool, and earthwork tool.

F. Reasons why it is necessary to retain the machine judging from a national economic point of view;

1. The machine is indispensable to the mass production of the farming tool necessary for staple food production, and of the forest cutting tool and earthwork tool for the recovery from the war and earthquake damage.

2. Materials are scarce, now, for making farming tool as others, and the machine is deemed as indispensable to process such materials.

3. We are making a greater number of the farming tool, forest cutting tool, or earthquake tool in Kochi Pref., and if we lose the machine, we are afraid if the production of the tool for the food production or the recovery from the war and earthquake damage will be impossible.

3823

DECLASSIFIED E.O. 12065 SECTION 3-402/NNDG NO. 175013

List of designated reparation machines

As of Aug. 8, 1947

Name of plant	Location	Name of machine	Code No.	Representative in charge of custody of the machine	Remarks
Kamimura Iron Works Co.,Ltd. (K.K.Kamimura Tekkosho)	No. 20, Minato-machi, Kochi City	Lathe	20-1 (m) - 1	Gon-nojo Kamimura	
		Turret lathe	20-1 (m) - 2		
		"	20-1 (m) - 3		
		Vertical milling machine, knee type	20-1 (m) - 4		
Tanimura Iron Works (Tanimura Tekkosho)	No. 128, 1-Chome, Sambashi-dori, Kochi City	Turret lathe	20-1 (a) - 1	Eishi Fujita	
Tosa Electric Steel Works Co.,Ltd. (K.K. Tosa Denki Seikosho)	No. 49, Higashi-machi Harami, Kochi City	Lathe	20-1 (b) - 1	Yosiro Kubota	As for 20-1 (b)-1 and 20-1 (b)-4, submitted the application for exemption from the reparation
		"	20-1 (b) - 2		
		"	20-1 (b) - 3		
		"	20-1 (b) - 4		
		"	20-1 (b) - 5		
Tou ship-building Co., Ltd. (Tou Zosen K.K.)	No. 1707, Shin-u sa-cho, Takaoka-gun	Lathe	20-1 (c) - 1	Fujitaro Machida	
		"	20-1 (c) - 2		
Kochi Reconstruction Industry Co.,Ltd. (Kochi Fukko Kogyo K.K.)	No. 7012, Seiyo-machi, Kochi City	Lathe	20-1 (d) - 1	Nagayuki Okubo	Submitted the application for exemption from the reparation
Kochi Wood-Working Industrial Cooperative Association (Kochi Mokko Kogyo Kyodo Kumiai)	No.55, Higashi-Kutanda, Kochi City	Lathe	20-1 (e) - 1	Kenzo Kawasaki	

FILE

9528

DECLASSIFIED E.O. 12065 SECTION 3-402/NNDG NO. 175013

Tosa Hard Wares Co. (Tosa Kanamono Gokei Kaisha)	Kuzume, Okusuue-Mura, Kami-gun	Steam hammer (3/4 ton)	20-1 (f) - 1	Ichiro Nojima	Submitted the application for exemption from the reparation
Tosa Forestry Machine Works (Tosa Ringyo Kikai Seisakusho)	No. 28, 4 chome, Sambashi-dori Kochi City	Lathe	20-1 (g) - 1	Tadahide Iwehara	- " -
Nankai Iron Industry Co., Ltd. (Nankai Tekko K. K.)	No. 699, Tanezaki, Kochi City	Lathe " "	20-1 (h) - 1 20-1 (h) - 2 20-1 (h) - 3	Eiki Kurita	
Tosa Ship-building Co., Ltd. (Tosa Zosen K.K.)	No. 196, Tanezaki, Kochi City	Lathe Radial Drilling Machine Drilling Machine	20-1 (i) - 1 20-1(i) - 2 20-1 (i) - 3	Yoshinao Nomura	
Takaoka Iron Works Limited Co. (Takaoka Tekko Yugen Kaisha)	No.Hei-22-3, Takaoka-cho, Takaoka-gun	Lathe "	20-1 (j) - 1 20-1 (j) - 2	Tojiro Morita	
Hirata Iron Works (Hirata Tekkosho)	No.263, Tanezaki, Kochi City	Turret lathe	20-1 (j) - 1	Kenichi Hirata	
Nomura-gumi Works Co.,Ltd.	No.171, Wakama-tsu-cho, Kochi City	Lathe	20-1 (l) - 1	Matao Minami	Submitted the application for exemption from the reparation
Tanie-gumi Industry Co., Ltd.	No. 1617, Niida, Kochi City	Electric drill " " "	20-2-1 20-2-2 20-2-3 20-2-4 20-2-5	Masao Takeda	

DECLASSIFIED E.O. 12065 SECTION 3-402/NNDG NO. 175013

Kochi-
Dispersed Mach

HEADQUARTERS
KOCHI MILITARY GOVERNMENT TEAM
APO 317

BJN/WBW/eo

AG 004 (C & I) 8 August 1947

SUBJECT: Report of Integrated Facilities in Dispersed Machinery from Army and Navy Arsenals

THROUGH: Commanding Officer
Shikoku Military Government Region
APO 317

TO: Commanding General
Eighth Army
APO 343

1. Reference:

a. Letter, Shikoku Military Government Region, dated 4 August 1947, AG 004., subject: Integrated Facilities in Dispersed Machinery from Army and Navy Arsenals.

b. Operational Directive number 5/9 for 1946, Headquarters Eighth Army, dated 15 July 1947.

2. There are no Army or Navy Arsenals in Kochi Prefecture.

3. The following is a list of the code numbers of reparation machines dispersed from Kure Naval Arsenal and Osaka Army Arsenal in this Prefecture.

20 - 1 (a) - 1	Dispersed from Kure Naval Arsenal
20 - 1 (b) - 1	"
2	"
3	"
4	"
5	"
20 - 1 (c) - 1	"
2	"
20 - 1 (d) - 1	"
20 - 1 (e) - 1	"
20 - 1 (f) - 1	"
20 - 1 (g) - 1	"
20 - 1 (h) - 1	"
2	"
3	"
20 - 1 (i) - 1	"
2	"
3	"

DECLASSIFIED E.O. 12065 SECTION 3-402/NNDG NO. 175013

Reparations
JBG
ODG

20 - 1 (j) -	1	Dispersed from Kure Naval Arsenal
	2	"
20 - 1 (k) -	1	"
20 - 1 (l) -	1	"
20 - 1 (m) -	1	"
	2	"
	3	"
	4	"
20 - 2 -	1	Dispersed from Osaka Army Arsenal
	2	"
	3	"
	4	"
	5	"

4. None of these dispersed machines are considered to be integrated facilities since none of them are used in conjunction with other reparation machines to form an integrated facility.

CHESTER D. HAISLEY
Lt. Col., Infantry
Commanding

AG 004.04 1st Ind JBG/CHB/rw
11 August 1947

HEADQUARTERS, Shikoku Military Government Region, APO 317.

TO: Commanding General, Eighth Army, APO 343.
(Attn: Military Government Section)

FOR THE COMMANDING OFFICER:

CHARLES H. BACK
Captain, AC
Adjutant

REF: LTR., THIS HQ, dtd 6 Oct 47, SUBJ Addition to Reparation Lists

Oct. 10, 1947

To : Commanding Officer of Kochi Mil Govt Team

From: Chief of Liaison Office, Kochi Pref.

List of Oil Tanks in this Pref.

Location	Capacity (kilolitre)	Owner	Address of owner	Former owner	Used for military purpose or not	Date of construction	Pipe attached to tank Length (ft)	Pipe attached to tank Calibre (inch)	Accessories	Remarks
Asauzu, Kan-no-ura-cho, Aki-gun	90	Mizobuchi Oil Co., Ltd	Nakano-shima, Kochi City	Mizobuchi Oil Co., Ltd	Not used	About 1931	About 26	2.5		
Shimizu Shimizu-cho, Hata-gun	540	"	"	Nihon Oil Co., Ltd.	"	End of the Taisho Era (about 1926)	About 40	6		
"	108	"	"	"	"	"	About 40	About 3		
Nishikubo-nofuchi, Muroto-cho, Aki-gun	68	Katsukichi Takei	Sakai-machi, Muroto-cho, Aki-gun		"					
Shirowake-ura Onogo-mura, Takaoka-gun	90	Usui Bussan K.K. (Usui Products Co., Ltd.)	Nonin-machi, Kochi City	None	"	"		2.5		

488

DECLASSIFIED E.O. 12065 SECTION 3-402/NNDG NO. 175013

Kujirahama, Murotozaki-cho, Aki-gun	90	"	"	None	"	Aug. 18, 1933	About 33	2.5		
Gomen, Muroto-cho, Aki-gun	45	"	"	None	"	Apr. 17, 1936	"	"		
Kitahon-machi, Kochi City	7.2	"	"	None	"	Jan. 23, 1939			A meter	Tank under the ground
Nonin-machi, Kochi City	3.6	"	"	None	"	July 22, 1933	None	None	None	Concete oil tanks divided into two parts (3.6 Kl and 36 Kl
"	36	"	"	None	"	"	"	"	"	
Shimoda, Shimoda-cho, Hata-gun	90	Gentaro Konishi	4088, Shimoda-cho, Hata-gun	Tokutaro Hirata	"	June, 1939				
Katashima, Sukumo-cho, Hata-gun	100	Tokue Kasuda	Katashima Sukumo-cho, Hata-gun		"					
32, Nakano-shima, Kochi City	200	Rising Sun Oil Co., Ltd		None	"		148	4		
"	200	"		"	"		120	4		
"	35	"		"	"		129	4		

DECLASSIFIED E.O. 12065 SECTION 3-402/NNDG NO. 175013

33, Nakanoshima, Kochi City	277	Vacum Oil Co.		None	"	Apr. 1934	102	6
"	35	"		"	"	"	171	2
"	35	"		"	"	"	171	2
"	245	Oil Distribution Co. Ltd. (Closed organization)	Nakanoshima Kochi City	Kochi Maruyu Oil Co. Ltd	"			
31 Nakanoshima, Kochi City	180	"	"	Mizobuchi Oil Co., Ltd	"	June, 1935	171	4
"	180	"	"	"	"	May, 1928	258	2.5
"	67	"	"	"	"	"	759	2
"	18	"	"	"	"	"	759	2
"	18	"	"	"	"	"	759	2

DECLASSIFIED E.O. 12065 SECTION 3-402/NNDG NO. 115013

29, Mimase-cho, Kochi City	540	"	"	"	"	Sept, 1927	16	6
57, Higashi-cho, Harami, Kochi City	90	Oil Distri-bution Co. Ltd. (closed organization)	Nakano-shima, Kochi City	Usui Bussan K.K. (Usui Products Co., Ltd.)	"	May, 1927	107	3
Tsu, Kan-no-ura-cho, Aki-gun	24	Kochi Ken Fisheries Associa-tion (Suisan Gyokai)	Nakaji-ma-cho, Kochi City	Katsukichi Takei	"	Dec. 14, 1943	208	2

DECLASSIFIED E.O. 12065 SECTION 3-402/NNDG NO. 115013

Murotozaki-cho, Aki-gun	280	"	"	"	"	"	330	2.5
Muroto, Muroto-cho, Aki-gun	200	"	"	Mizobuchi Oil Co.	"	"	297	2.5
Shimizu-cho, Hata-gun	200	"	"	Tokutaro Hirata	"	March 2, 1946	165	3
Oshima, Sukumo-cho, Hata-gun	75	"	"	Tokue Masuda	"	Dec.14, 1943	83	2
Saga-cho, Agawa-gun	10	Saga Fishing Association	Saga-cho, Agawa-gun	Kochi Ken Gyogyo Kumiai Rengokai (The Federation of Kochi Ken Fishery Unions	"	1942	66	2
Shin-Usa-cho, Takaoka-gun	100	Shin-Usa Fishing Association	Shin-Usa-cho, Takaoka-gun	None	"	Apr. 6, 1936	330	3
"	25	Shin-Usa Ship-Owners Association	"	Isamu Saito	"			
"	25	"	"	"	"			
Higashiharami Godaisan, Kochi City	50	Kochi Ken Fisheries Association	Nakaji-cho, Kochi City	Usui Bussan K.K. (Usui Products Co. Ltd.)	"	March 2, 1946	33	2.5
"	50	"	"	"	"	"	33	2.5

DECLASSIFIED E.O. 12065 SECTION 3-402/NNDG NO. 115013

"	30	"	"	Kochi Ken Gyogyo Kumiai Rengokai (The Federation of Kochi Ken Fishery Unions)	"				
"	20	"	"	"	"				
"	20	"	"	Michio Myojin	"				
"	21	"	"	"	"				
Ususugi, Katashima, Sukumo-cho, Hata-gun	200	Finance Ministry	Tokyo	The 21st Storming Corps Navy Ministry	Used by the Navy	About 1943	330	3.5	Damaged and is in the air-defence cellar.
"	200	"	"	"	"	"	330	3.5	Now it impossible to be used, officially released by the Occupation Forces on Jan. 21, 1946.
Nishi-machi, harami, Kochi City		"		(Saneki Defence Corps) Navy Winistry	"				Transferred from Uguru-shima, Okino shima-mura, Hata-gun to the Transformer Station of Shikoku Electricity Supply Co. (Nishi-machi Harami, Kochi City)

Note: Unknown points are under investigation and will be reported as soon as they are known.

DECLASSIFIED E.O. 12065 SECTION 3-402/NNDG NO. 1/3013

DECLASSIFIED E.O. 12065 SECTION 3-402/NNDG NO. 175013

28 Oct., 1947

To : Lt. Col. Chester D. Haisley,
Commanding Officer of
Kochi Mil Govt Team

Subject: On custody of oil tanks once belonged to the former Japanese Army & Navy, or once used by it.

From : Wakaji Kawamura, Governor of Kochi Ken.
Jitsuo Shinpo, Director of Kochi Branch,
Takamatsu Financial Bureau.

1. We swear that the Japanese government will herewith assume responsibility for the custody of oil tanks listed belows and their safe guarding on and after 28 October, 1947.

(a) Oil tanks once belonged to the former Japanese Army & Navy

Type of tank	Capacity	Shape, Height (H), Diameter (D), Weight (W)	Accessories	Present owner	Location	Remarks
Oil tank	4.25 Kl	Cylindrical 1.9 m H 1.8 m D 0.82 ton W	A hand-pump	Kochi Transformer sub-station, Shikoku Electric Supply Co. Ltd.	96, Hamami-Nishi-cho, Kochi City	Once used to generate electricity at Battery on the Uguru-shima. Released finally on 21 Jan. 1946
Do.	Do.	Do.	None	Do.	Do.	Do.
"	"	"	"	Kochi Works Shop, Ship-building Co.	125, Tanezaki, Kochi City	"
"	"	"	"	Do.	Do.	"

874

DECLASSIFIED E.O. 12065 SECTION 3-402/NNDG NO. 175013

"	K1 208.299	Cylindrical 10.5m H 5.4m D unknown W	Pipe length 200 metre 3.5 inch Calibre	(Financial Ministry) Sukumo Business office, Nakamura Branch, Takamatsu Financial Bureau	Ususuki, Sukumo-cho	once used by Kure Naval Supply Unit as fuel tank. Damaged by Occupation Forces. Released finally on 31 Jan., 1947.
"	"	"	None	"	"	"

(b) Private oil tanks once used by the former Japanese Army & Navy.

None

Sign: Wakaji Kawamura

Wakaji Kawamura, Governor of Kochi Pref.

Mitsuo Shimpo

~~Hi~~Mitsuo Shimpo, Director of Kochi Branch, Takamatsu Financial Bureau.

DECLASSIFIED E.O. 12065 SECTION 3-402/NNDG NO. 175013

ECONOMIC

20-d

29 Nov. 1947

To : Commanding Officer of Kochi Mil. Gov't. Team.

From : Chief of Kochi District of Takamatsu Financial Bureau.

Subject : On change of name of factory in custody of reparation machinary.

Sir:

I hereby inform you that the above stated factory has been changed to the following.

Notification

Old name of factory : Nankai Tekko Kabushiki Kaisha.
(Nankai Iron Works Co. Ltd.)

New name of factory : Tanezaki Seikan Tekko Kabushiki Kaisha.
(Tanezaki Boiler & Iron Works Co. Ltd.)

Date of change : 20 Nov. 1947.

REF:
LTR, HQ. KOCHI, AG 000 (ECON) dtd 5 DEC 47, SUBJ: CORRECTED LISTING OF REPARATIONS LISTING

1549

DECLASSIFIED E.O. 12065 SECTION 3-402/NNDG NO. 175013

20-01

12 Dec

HEADQUARTERS
KOCHI MILITARY GOVERNMENT TEAM
APO 317

BRC/WBW/eo

AG: 004 (Econ) 5 December 1947

SUBJECT: Correction to Listing of Reparation Facilities

THROUGH: Commanding Officer
Shikoku Military Government Region
APO 317

TO: Commanding General
Eighth Army
APO 343
ATTENTION: Military Government Section

1. In compliance with paragraph 2, letter, Headquarters, Eighth Army, AG 004 (MG-Em), dated 5 September 1947, subject: List of Arsenals and Dispersal Areas, the following correction is made to inclosure one of reference letter above for Kochi Prefecture, code number (20). On 3 December this headquarters was informed of a change in the name of one (1) plant containing dispersed machinery. The Nankai Iron Joint Stock Company, (Nankai Tekko K.K.) code 20-01 (h), has had its' name changed to the Tanezaki Boiler and Iron Works Co. Ltd., (Tanezaki Seikan Tekko K.K.).

CHESTER D. HAISLEY
Lt. Col. Infantry
Commanding

AG 004.04 1st Ind HEP/CHB/ty

HEADQUARTERS, Shikoku Mil Govt Region, APO 317, 9 December 1947

TO: Commanding General Eighth Army, APO 343
ATTENTION: Military Government Section

FOR THE COMMANDING OFFICER:

CHARLES H. BACK
Captain, AC
Adjutant