Sec.15

EGM 3520 Mechanics of Materials (MoM)

Beer et al. 2012, Mechanics of Materials, McGraw-Hill.

P4.19, p.239

P4.19, p.239

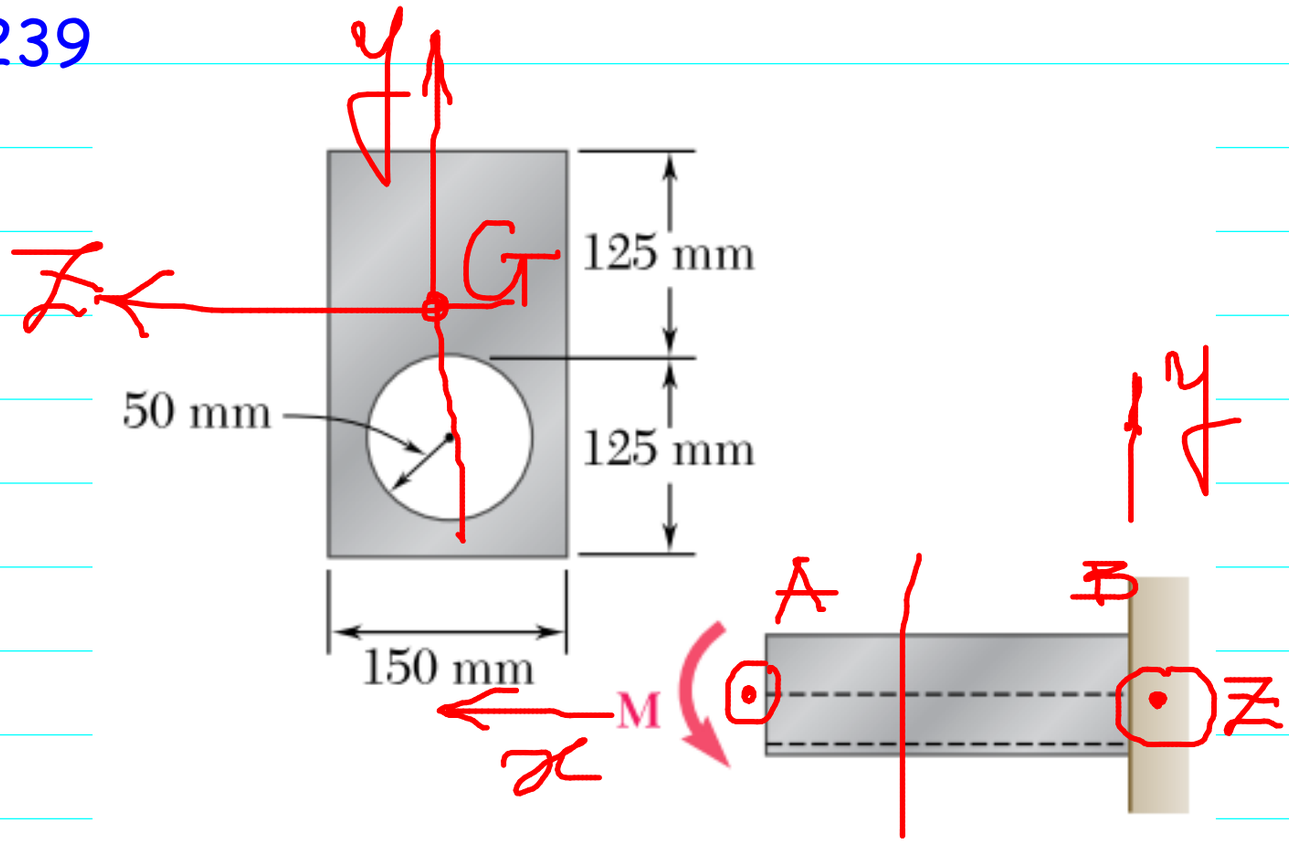

Knowing that for the extruded beam shown the allowable stress is 120 MPa in tension and 150 MPa in compression, determine the largest couple M that can be applied.

Pause video NOW !

Work out the next step

→ on your own first

→ discuss with teammates

if you get stuck

then continue to watch the video

"Intelligence consists of this; that we recognize the similarity between different things, and the difference between similar things."

Baron de la Brède et de Montesquieu (1689-1755)

quoted in [Quantum field theory, E. Zeidler, 2008, p.175]

FBDs

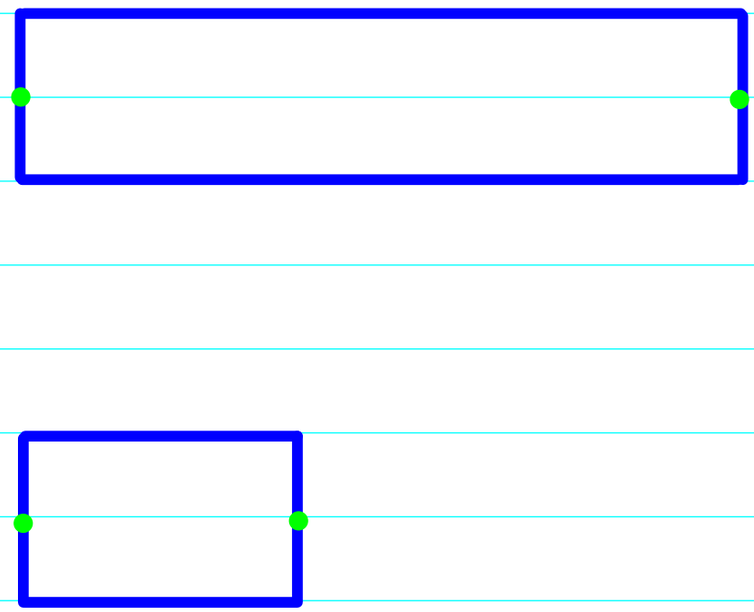

Method

FBD and bending moment diagram

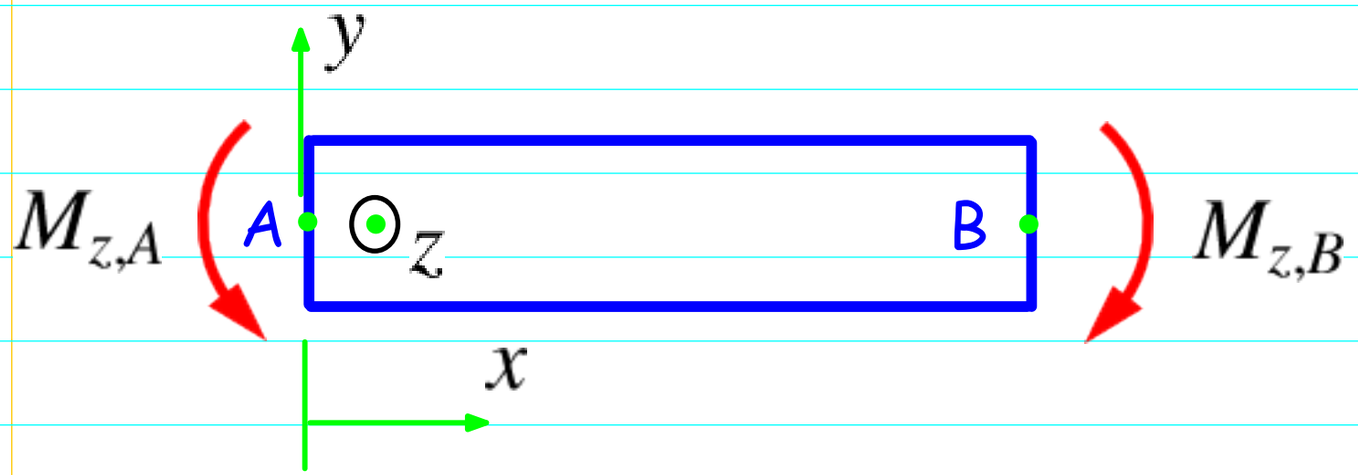

M_{z,A}

Use negative curvature ("down") convention

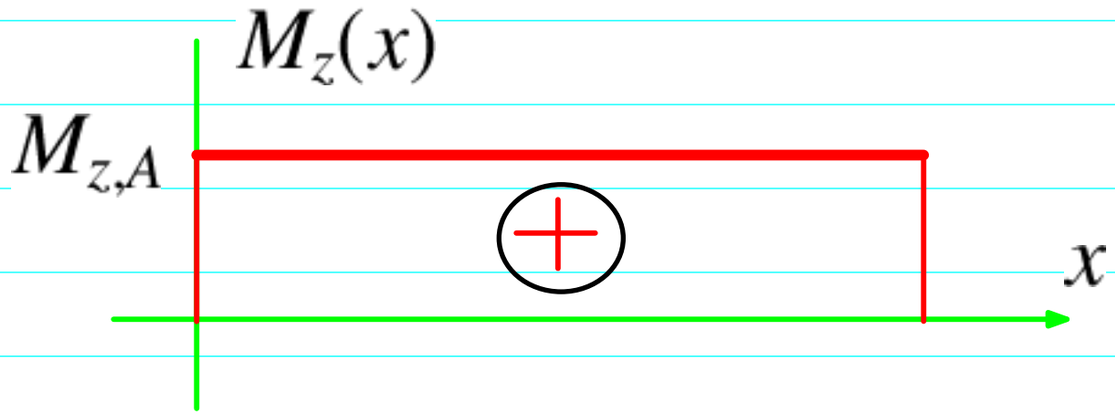

Normal stress on beam cross section

$$\sigma_x = + \frac{M_z y}{I_z} \tag{1}$$

\sigma_x = {\color{red} +} \frac{M_z \, y}{I_z}

due to "down" convention

Pause video NOW !

Work out the next step

→ on your own first

→ discuss with teammates

if you get stuck

then continue to watch the video

"Intelligence consists of this; that we recognize the similarity between different things, and the difference between similar things."

Baron de la Brède et de Montesquieu (1689-1755)

quoted in [Quantum field theory, E. Zeidler, 2008, p.175]

Computation

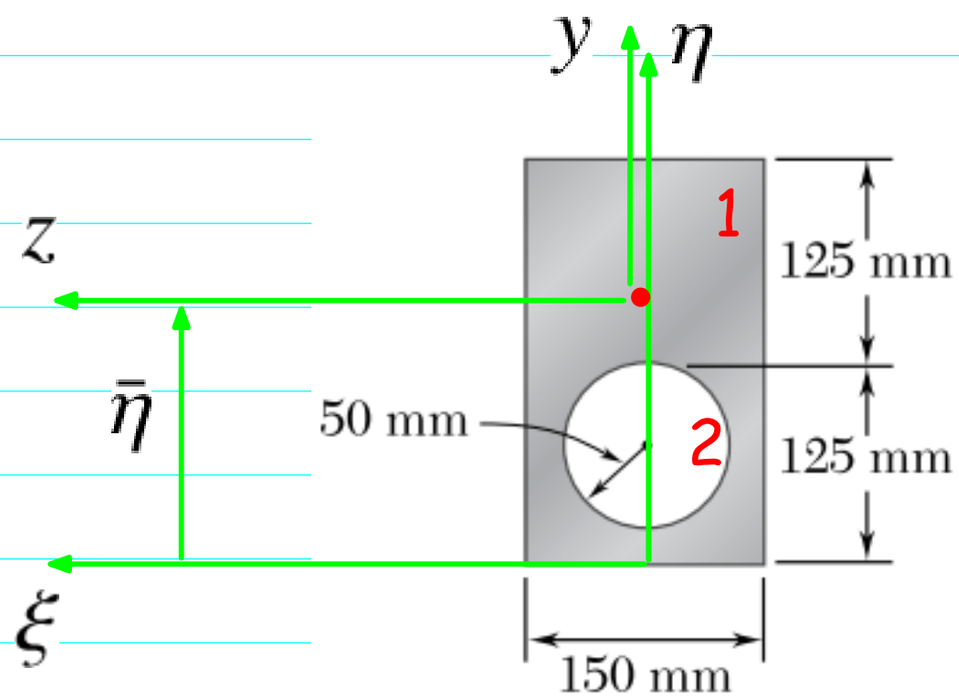

Area of cross section

$$A = A_1 - A_2 \tag{1}$$

A = A_1 - A_2

$(\bar{\xi}, \bar{\eta})$ coordinates of centroid

(\bar \xi , \bar \eta)

$$\bar{\xi} = 0 \tag{2}$$

\bar \xi = 0

$$\bar{\eta} = \frac{A_1\bar{\eta}_1 - A_2\bar{\eta}_2}{A} \tag{3}$$

\bar \eta = \frac{A_1 \bar \eta_1 - A_2 \bar \eta_2}{A}

Q_\xi = \int_{A_1 - A_2} \eta \, dA = \int_{A_1} \eta \, dA - \int_{A_2} \eta \, dA = A_1 \bar \eta_1 - A_2 \bar \eta_2

1st area moment of inertia (1st moment)

Beer et al. 2012 Appendix A

$$Q_\xi = \int_A \eta \, dA = \bar{\eta} \, A \qquad (1)$$

Q_\xi = \int_A \eta \, dA = \bar \eta \, A

Mean value theorem (MVT)

$$Q_\xi = \int_{A_1 - A_2} \eta \, dA = \int_{A_1} \eta \, dA - \int_{A_2} \eta \, dA \qquad (2)$$

Q_\xi = \int_{A_1 - A_2} \eta \, dA = \int_{A_1} \eta \, dA - \int_{A_2} \eta \, dA

$$Q_\xi = A_1 \bar{\eta}_1 - A_2 \bar{\eta}_2 \qquad (3)$$

Q_\xi = A_1 \bar \eta_1 - A_2 \bar \eta_2

MVT

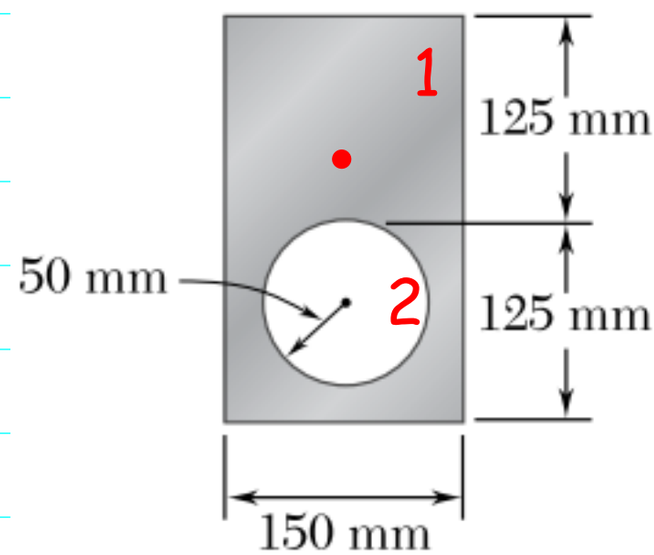

$$A_1 = 150 \times 250 \, mm^2 \, , \qquad \bar{\eta}_1 = 125 \, mm \qquad (4)$$

A_1 = 150 \times 250 \, mm^2 \ , \quad \bar \eta_1 = 125 \, mm

$$A_2 = \pi (50)^2 \, mm^2 \, , \qquad \bar{\eta}_2 = (125 - 50) \, mm \qquad (5)$$

A_2 = \pi (50)^2 \, mm^2 \ , \quad \bar \eta_2 = (125 - 50) \, mm

$$y = \eta - \bar{\eta} \qquad (6)$$

y = \eta - \bar \eta

Moment of inertia of cross section wrt z axis

$$I_z = \int_A y^2 dA = \int_{A_1} y^2 dA - \int_{A_2} y^2 dA = I_{z,1} - I_{z,2} \quad (1)$$

I_{z} = \int_A y^2 dA = \int_{A_1} y^2 dA - \int_{A_2} y^2 dA = I_{z,1} - I_{z,2}

$I_{z,1}$ moment of inertia of area A_1 wrt z axis passing through centroid G of area A

I_{z_1} moment of inertia of area A_1 wrt z_1 axis passing through centroid G_1 of area A_1

$\bar{y}_1$ the y coordinate of centroid G_1 of area A_1, from the centroid G of area A

$$\bar{y}_1 = \bar{\eta}_1 - \bar{\eta} \quad (2)$$

\bar y_1 = \bar \eta_1 - \bar \eta

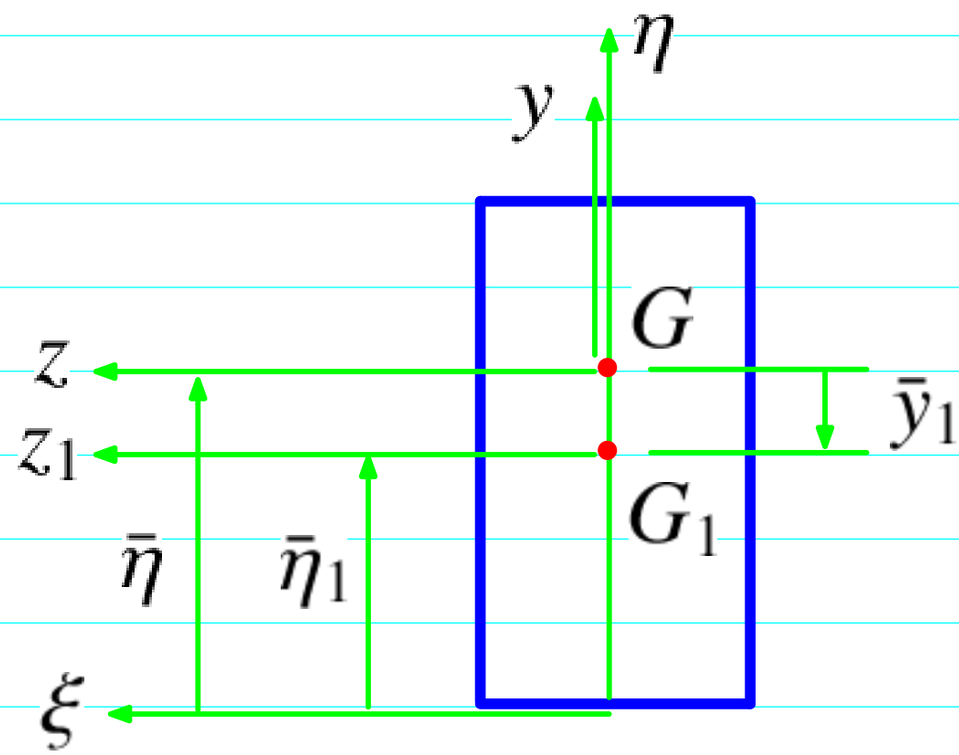

$$I_{z,1} = I_{z_1} + A_1(\bar{y}_1)^2 = I_{z_1} + A_1(\bar{\eta}_1 - \bar{\eta})^2 \quad (3)$$

I_{z,1} = I_{z_1} + A_1 (\bar y_1)^2 = I_{z_1} + A_1 (\bar \eta_1 - \bar \eta)^2

$$I_{z_1} = \frac{b_1 (h_1)^3}{12} \quad (1)$$

I_{z_1} = \frac{b_1 (h_1)^3}{12}

Similarly for subarea A_2

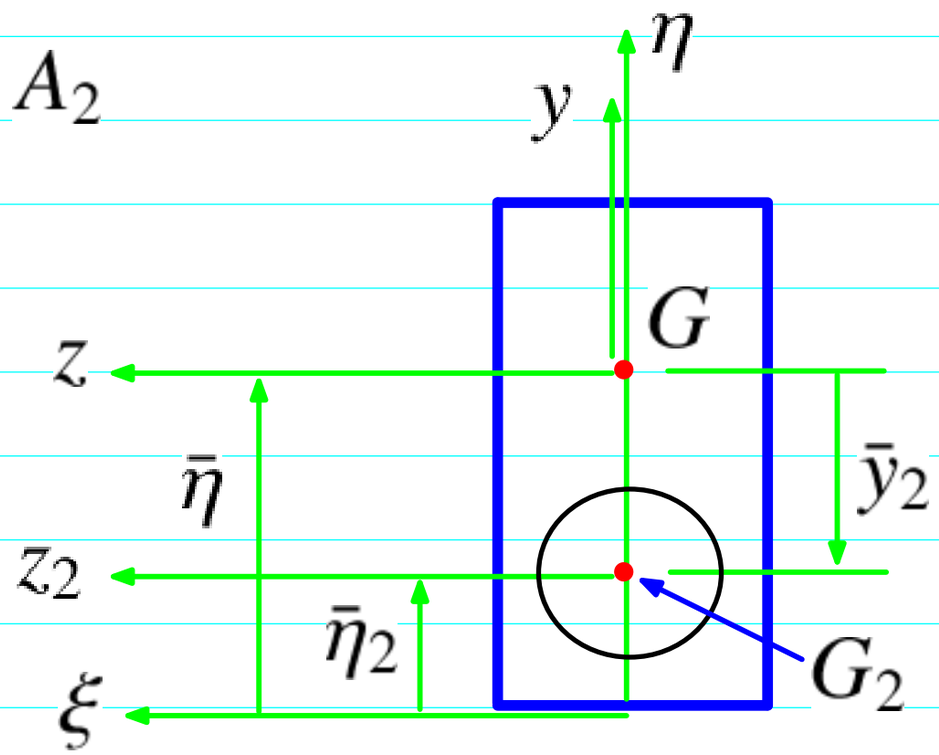

$$I_{z,2} = I_{z_2} + A_2(\bar{y}_2)^2 = I_{z_2} + A_2(\bar{\eta}_2 - \bar{\eta})^2 \quad (3)$$

I_{z,2} = I_{z_2} + A_2 (\bar y_2)^2 = I_{z_2} + A_2 (\bar \eta_2 - \bar \eta)^2

$$I_{z_2} = \int_{A_2} (y_2)^2 \, dA \quad (4)$$

I_{z_2} = \int_{A_2} (y_2)^2 \, d A

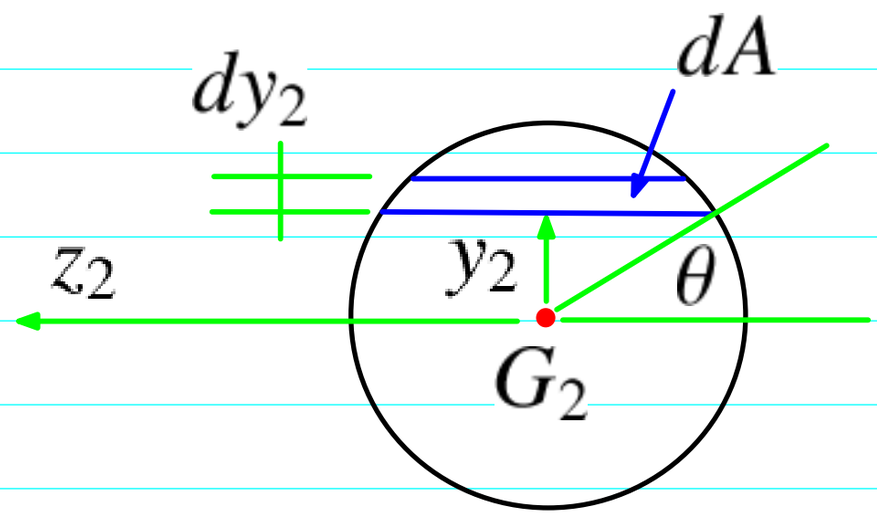

Method 1: Direct integration

Use θ as primary integration variable

$$dA = (2R\cos\theta)\,dy_2 \tag{1}$$

dA = (2 R \cos \theta) \, dy_2

$$y_2 = R\sin\theta \Rightarrow dy_2 = R\cos\theta\,d\theta \tag{2}$$

y_2 = R \sin \theta \Rightarrow dy_2 = R \cos \theta \, d\theta

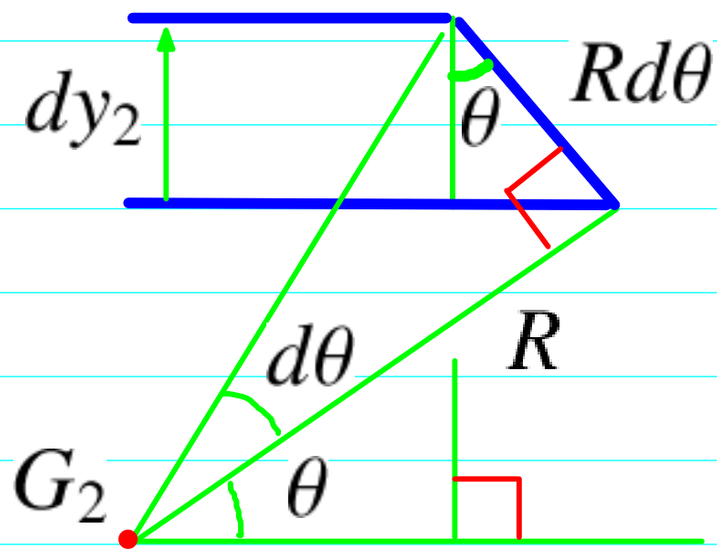

$$dA = 2R^2(\cos\theta)^2 d\theta \tag{3}$$

dA = 2 R^2 (\cos\theta)^2 d\theta

(4) p.15-7:

$$I_{z_2} = \int_{A_2} (y_2)^2\,dA = \int_{A_2} (R\sin\theta)^2\,2R^2(\cos\theta)^2 d\theta \tag{4}$$

I_{z_2} = \int_{A_2} (y_2)^2 \, d A = \int_{A_2} (R \sin \theta)^2 \, 2 R^2 (\cos\theta)^2 d\theta

$$I_{z_2} = 2R^4 \int_{-\pi/2}^{\pi/2} (\sin\theta)^2 \, (\cos\theta)^2 d\theta \tag{1}$$

I_{z_2} = 2 R^4 \int_{-\pi /2}^{\pi /2} (\sin \theta)^2 \, (\cos\theta)^2 d\theta

$$\sin 2a = 2 \sin a \cos a \tag{2}$$

\sin 2 a = 2 \sin a \cos a

$$\cos(a+b) = \cos a \cos b - \sin a \sin b \tag{3}$$

\cos (a+b) = \cos a \cos b - \sin a \sin b

$$\cos(2a) = (\cos a)^2 - (\sin a)^2 = 1 - 2(\sin a)^2 \tag{4}$$

\cos (2a) = (\cos a)^2 - (\sin a)^2 = 1 - 2 (\sin a)^2

$$(\sin a)^2 = \frac{1 - \cos 2a}{2} \tag{5}$$

(\sin a)^2 = \frac{1 - \cos 2a}{2}

$$(\sin a \cos a)^2 = \frac{1}{4}(\sin 2a)^2 = \frac{1}{8}(1 - \cos 4a) \tag{6}$$

(\sin a \cos a)^2 = \frac14 (\sin 2a)^2 = \frac18 (1 - \cos 4a)

Use (6) in (1) to obtain:

$$I_{z_2} = \frac{1}{4}R^4 \int_{-\pi/2}^{\pi/2} (1 - \cos 4\theta) \, d\theta \tag{7}$$

I_{z_2} = \frac14 R^4 \int_{-\pi /2}^{\pi /2} (1 - \cos 4\theta) \, d\theta

$$I_{z_2} = \frac{1}{4}R^4 \left[\theta - \frac{\sin 4\theta}{4} \right]_{-\pi/2}^{\pi/2} = \frac{1}{4}\pi R^4 \tag{8}$$

I_{z_2} = \frac14 R^4 \left[\theta - \frac{\sin 4\theta}{4} \right]_{-\pi /2}^{\pi /2} = \frac14 \pi R^4

Method 2: Indirect integration

Polar moment of inertia

$$J = \int_A \rho^2 \, dA = \int_A [(y_2)^2 + (z_2)^2] \, dA = I_{z_2} + I_{y_2}$$

J = \int_A \rho^2 \, dA = \int_A [(y_2)^2 + (z_2)^2] \, dA = I_{z_2} + I_{y_2}

(1)

Due to symmetry we have

$$I_{z_2} = I_{y_2}$$

(2)

I_{z_2} = I_{y_2}

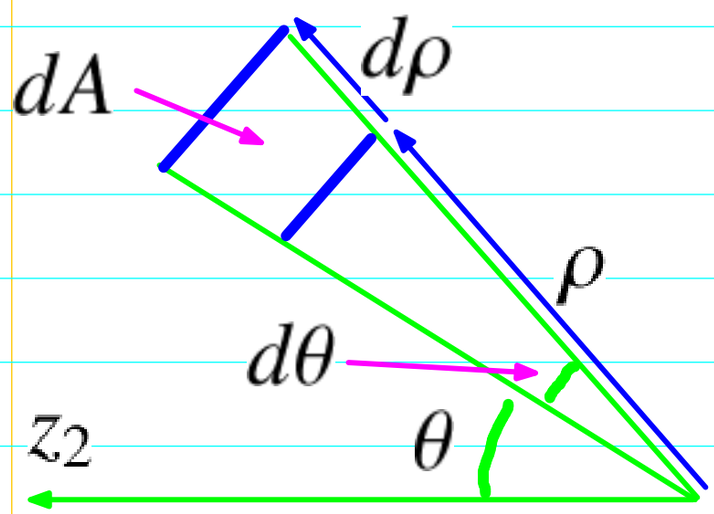

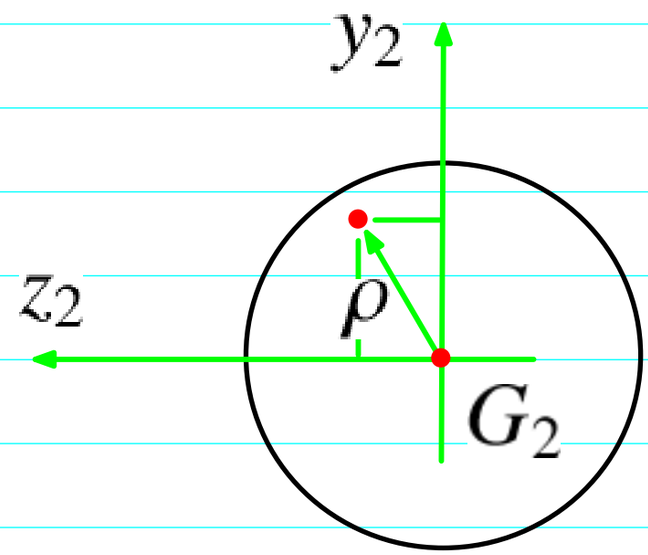

$$I_{z_2} = \frac{1}{2} J = \frac{1}{2} \int_{\rho=0}^{\rho=R} \int_{\theta=0}^{\theta=2\pi} \rho^2 (\rho d\theta \, d\rho) = \frac{1}{2}(2\pi)\frac{R^4}{4}$$

I_{z_2} = \frac12 J = \frac12 \int_{\rho = 0}^{\rho = R} \int_{\theta = 0}^{\theta = 2\pi} \rho^2 (\rho d\theta \, d\rho)
= \frac12 (2 \pi) \frac{R^4}{4}

(3)

Ordinate of top surface from centroid

$$y_{top} = \eta_{top} - \bar{\eta} = h_1 - \bar{\eta} \tag{4}$$

y_{top} = \eta_{top} - \bar \eta = h_1 - \bar \eta

Ordinate of bottom surface from centroid

$$y_{bot} = \eta_{bot} - \bar{\eta} = 0 - \bar{\eta} = -\bar{\eta} \tag{5}$$

y_{bot} = \eta_{bot} - \bar \eta = 0 - \bar \eta = - \bar \eta

Normal stress at top surface (tension)

$$\sigma_{x,top} = {\color{red} +} \frac{M_{z,A}\, y_{top}}{I_z} \le \sigma_{U,\, tension} \tag{6}$$

\sigma_{x, top} = {\color{red} +} \frac{M_{z,A} \, y_{top}}{I_z} \le \sigma_{U, \, tension}

$$M_{z,A,1} = \frac{I_z\, \sigma_{U,\, tension}}{y_{top}} \tag{7}$$

M_{z,A, 1} = \frac{I_z \, \sigma_{U, \, tension}}{y_{top}}

Normal stress at bottom surface (compression)

$$|\sigma_{x,bot}| = {\color{red} +} \frac{M_{z,A}\, |y_{bot}|}{I_z} \le \sigma_{U,\, comp} \tag{8}$$

| \sigma_{x, bot} | = {\color{red} +} \frac{M_{z,A} \, | y_{bot} |}{I_z} \le \sigma_{U, \, comp}

$$M_{z,A,2} = \frac{I_z\, \sigma_{U,\, comp}}{|y_{bot}|} \tag{9}$$

M_{z,A, 2} = \frac{I_z \, \sigma_{U, \, comp}}{| y_{bot} |}

Maximum allowable bending moment

$$M_{allow} = \min(M_{z,A,1}, M_{z,A,2}) \tag{1}$$

M_{allow} = \min (M_{z,A, 1} , M_{z,A, 2})

Note:

For the rectangular subarea A_1, instead of using the parallel axis theorem as done in (3) p.15-6, it is also simple just to integrate:

$$I_{z,1} = \int_{y_{bot}}^{y_{top}} y^2 \underbrace{dA}_{b\,dy} = \frac{1}{3}\, b\,(y_{top}^3 - y_{bot}^3) \tag{2}$$

I_{z,1} = \int_{y_{bot}}^{y_{top}} y^2 \underbrace{dA}_{b \, dy} = \frac13 \, b \,(y_{top}^3 - y_{bot}^3)

(6) p.15-5: $$y_{bot} = \cancelto{0}{\eta_{bot}} - \bar{\eta} = -\bar{\eta} \tag{3}$$

y_{bot} = \cancelto{0}{\eta_{bot}} - \bar \eta = - \bar \eta

$$y_{top} = \eta_{top} - \bar{\eta} = h_1 - \bar{\eta} \tag{4}$$

y_{top} = \eta_{top} - \bar \eta = h_1 - \bar \eta

///