Applications of Array Pointers (1A)

Copyright (c) 2010 - 2020 Young W. Lim.
Permission is granted to copy, distribute and/or modify this document under the terms of the GNU Free Documentation License, Version 1.2 or any later version published by the Free Software Foundation; with no Invariant Sections, no Front-Cover Texts, and no Back-Cover Texts. A copy of the license is included in the section entitled "GNU Free Documentation License".

Please send corrections (or suggestions) to youngwlim@hotmail.com.
This document was produced by using LibreOffice.

Virtual Array Pointers in Multi-dimensional Arrays

3-d array structure

- Hierarchical
- Nested Structure
- Virtual Array Pointers over
  - Contiguous
  - Linear Layout

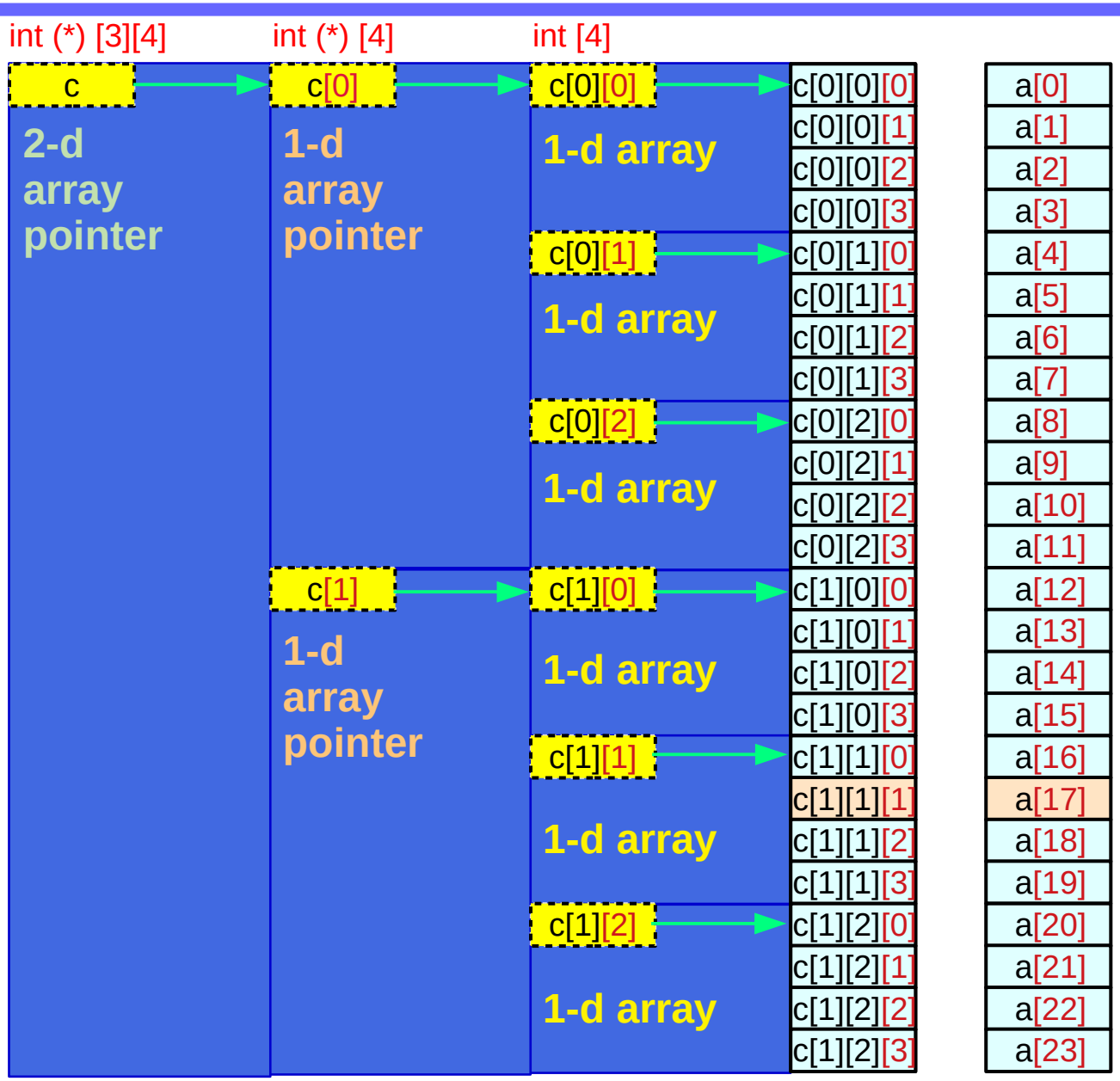

Array **p** and virtual array pointer **p**

Abstract data (array) p

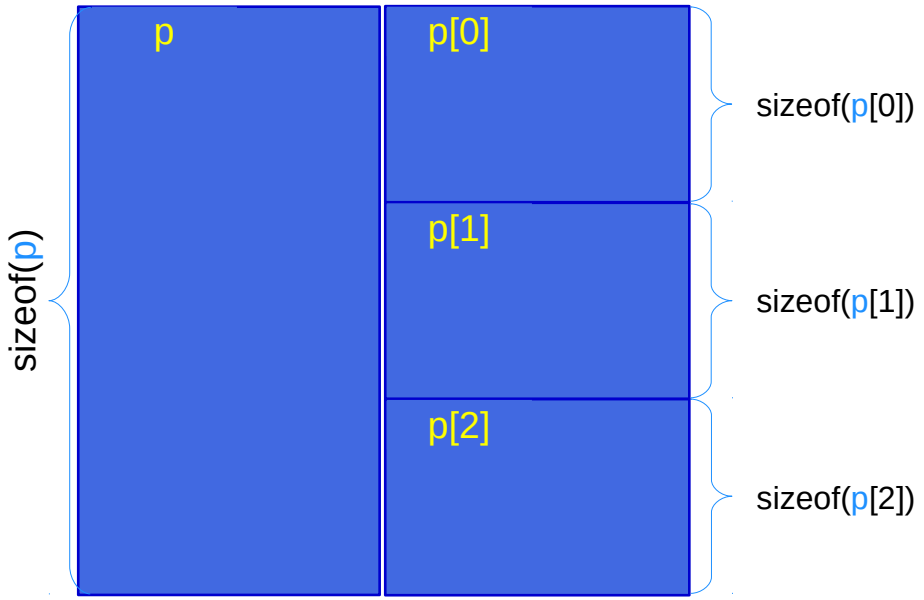

Virtual array pointer p

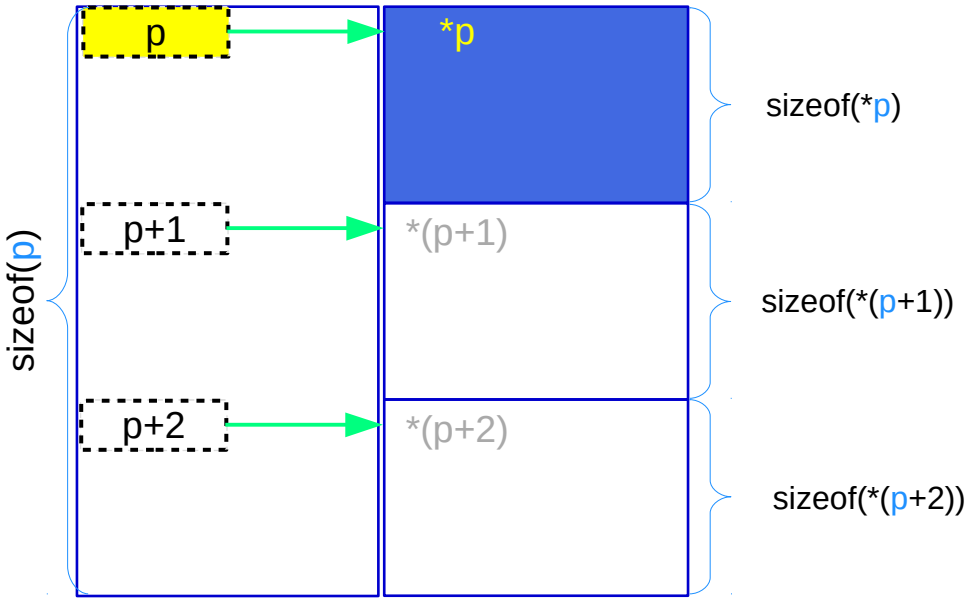

p is the name of an array and
has a array pointer type but
has a size of the array

p is a virtual array pointer

Virtual array pointer to abstract data

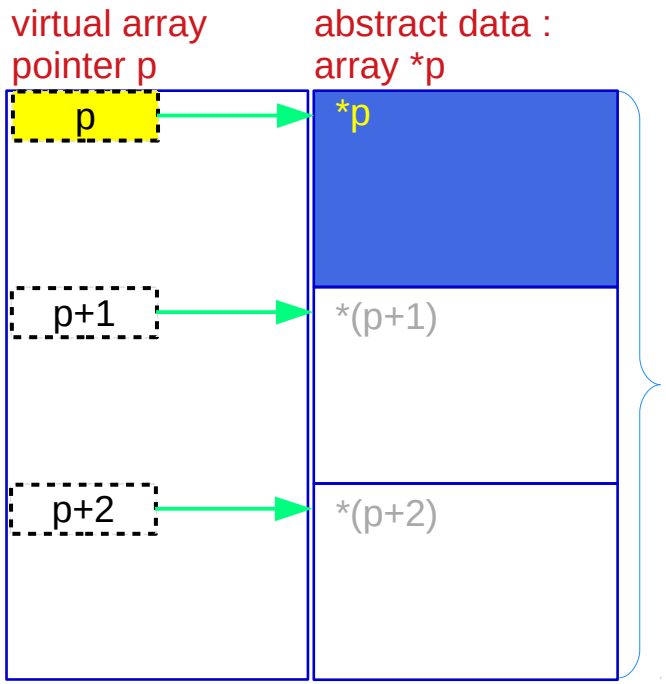

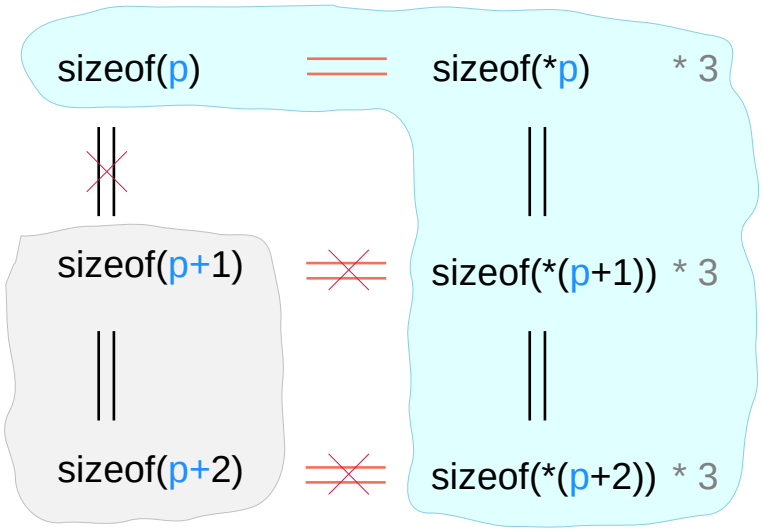

Array **a** and pointer **a**

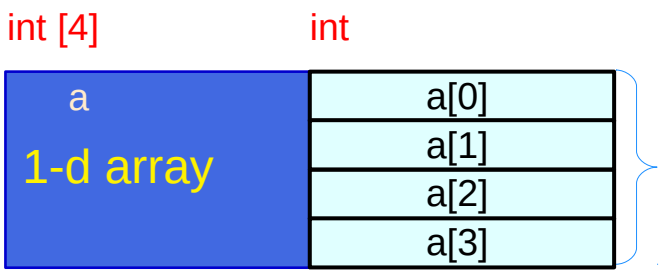

1-d array a specific array type

sizeof(a)

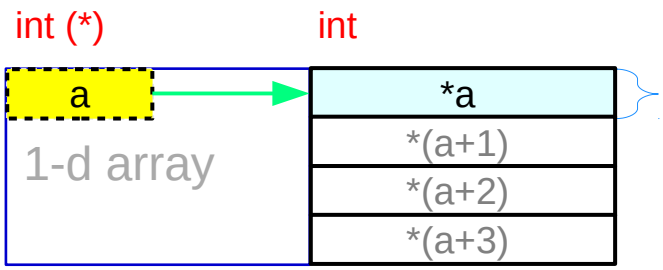

pointer a general pointer type

sizeof(a) = sizeof(*a) * 4

a is the name of a 1-d array and
has a pointer type but
has a size of the array

a is a <u>virtual</u> array pointer

Array **b** and pointer **b**

2-d array b specific array type

sizeof(b)

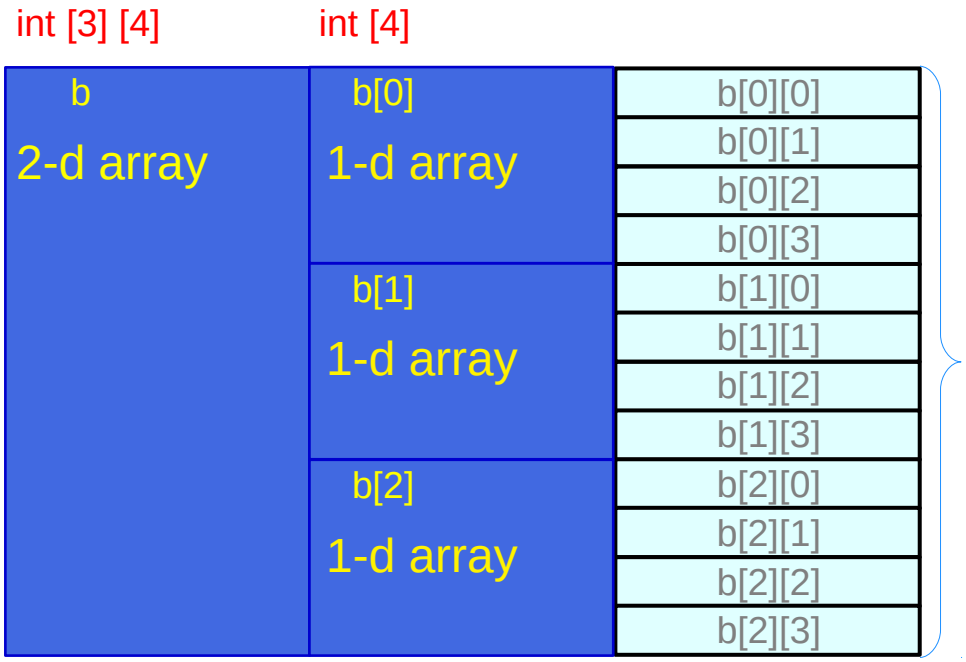

1-d array pointer b general pointer type

sizeof(b) = sizeof(*b) * 3

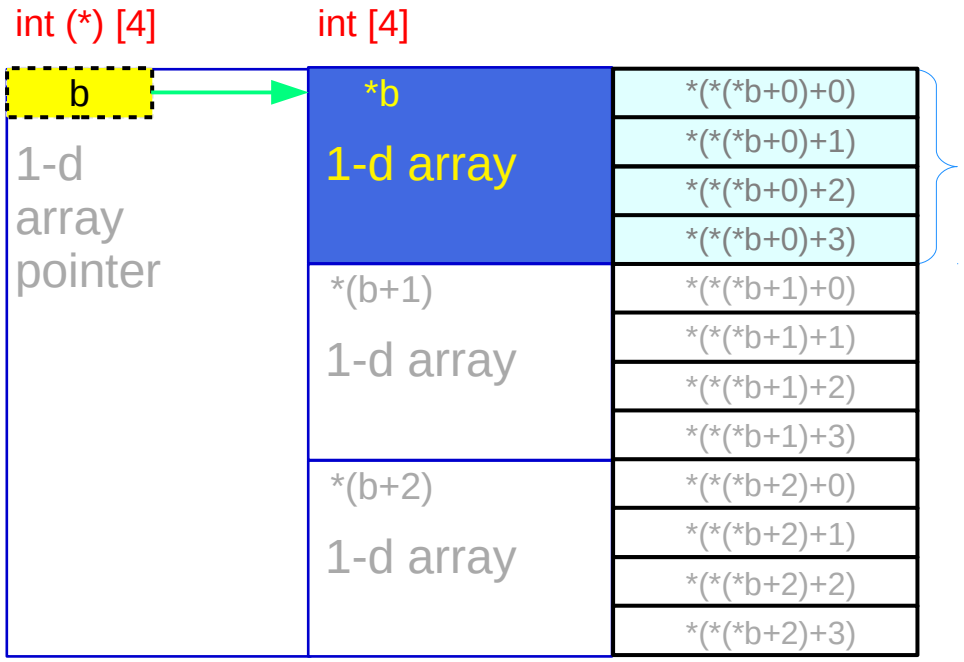

b is the name of a 2-d array and has a 1-d array pointer type but has a size of the array

b is a <u>virtual</u> array pointer

Array **c**

3-d array c

specific array type

sizeof(c)

c is the name of a 3-d array and has a 2-d array pointer type but has a size of the array

c is a <u>virtual</u> array pointer

Pointer **c**

2-d array pointer c

general pointer type

sizeof(c) = sizeof(*c) * 2

c is the name of a 3-d array and has a 2-d array pointer type but has a size of the array

c is a <u>virtual</u> array pointer

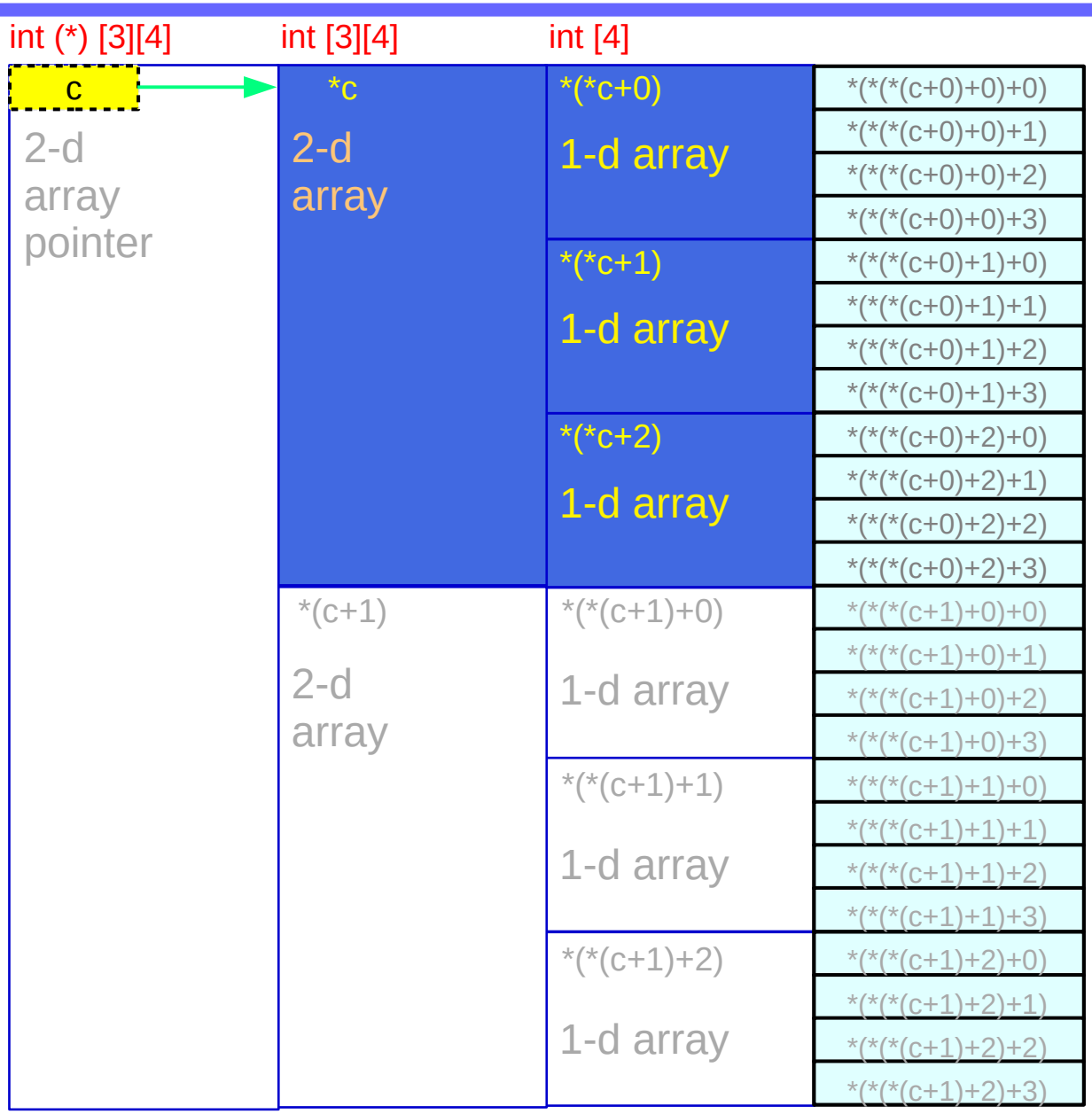

Pointers to primitive data

int *p; **int i, j, k;**

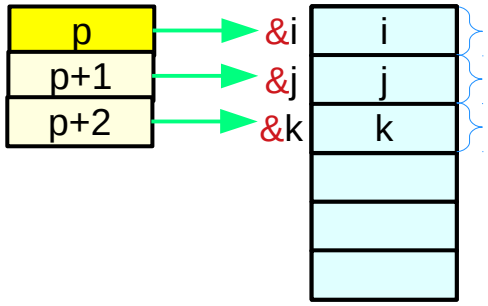

size = sizeof(i) = sizeof(*p) ≠ sizeof(p)

size = sizeof(j) = sizeof(*(p+1)) ≠ sizeof(p+1)

size = sizeof(k) = sizeof(*(p+2)) ≠ sizeof(p+2)

pointer size
4 or 8 bytes

double *q; **double a, b, c;**

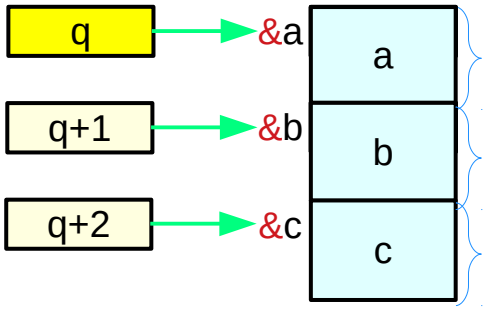

size = sizeof(a) = sizeof(*q) ≠ sizeof(q)

size = sizeof(b) = sizeof(*(q+1)) ≠ sizeof(q+1)

size = sizeof(c) = sizeof(*(q+2)) ≠ sizeof(q+2)

pointer size
4 or 8 bytes

Pointers to abstract data

T *p; **T X, Y, Z;**

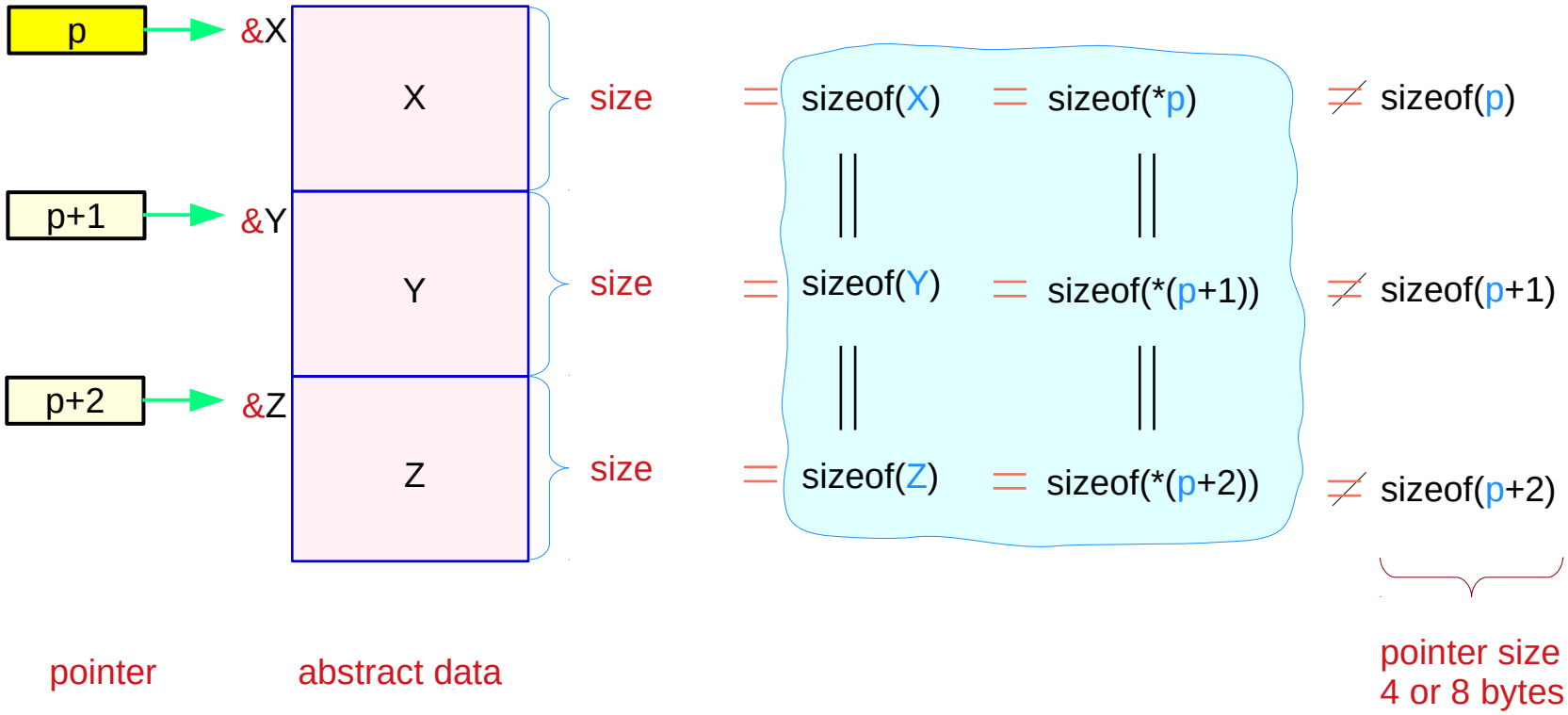

type -------- array
value -------- start address
increment size -------- size

Virtual pointers in a multi-dimensional array

p[i] :: T1 ***p[i], *p[i+1] :: T2**

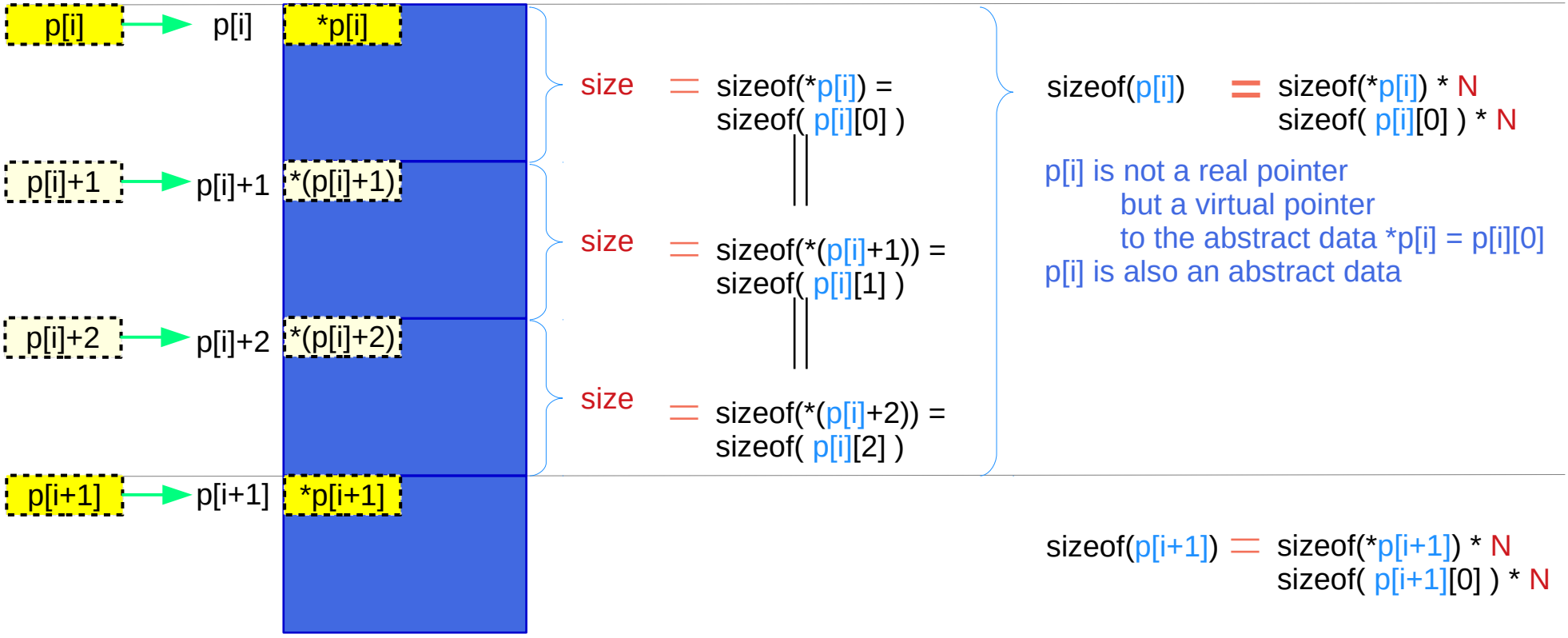

T1		T2		
int (*) [4]	→	int [4]	⊂	int (*)
int (*) [3][4]	→	int [3][4]	⊂	int (*)[4]

Virtual pointers in a multi-dimensional array

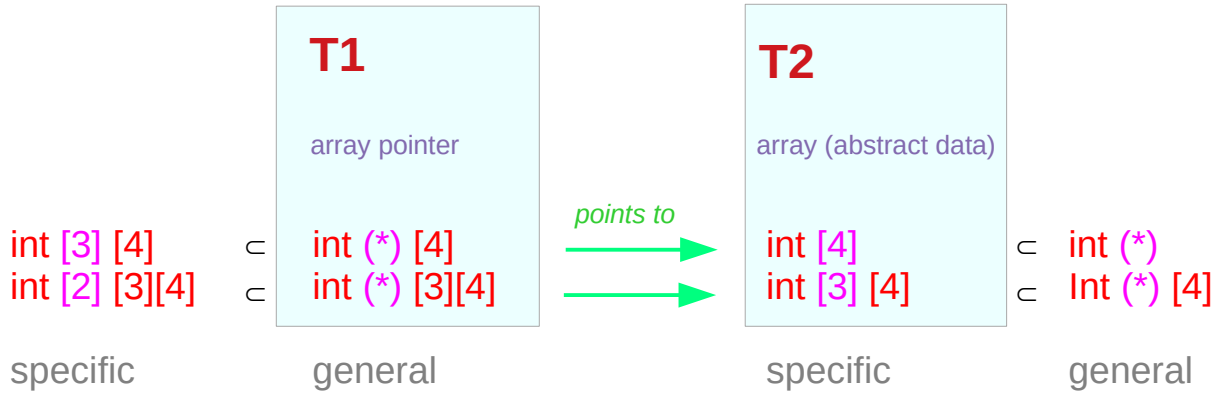

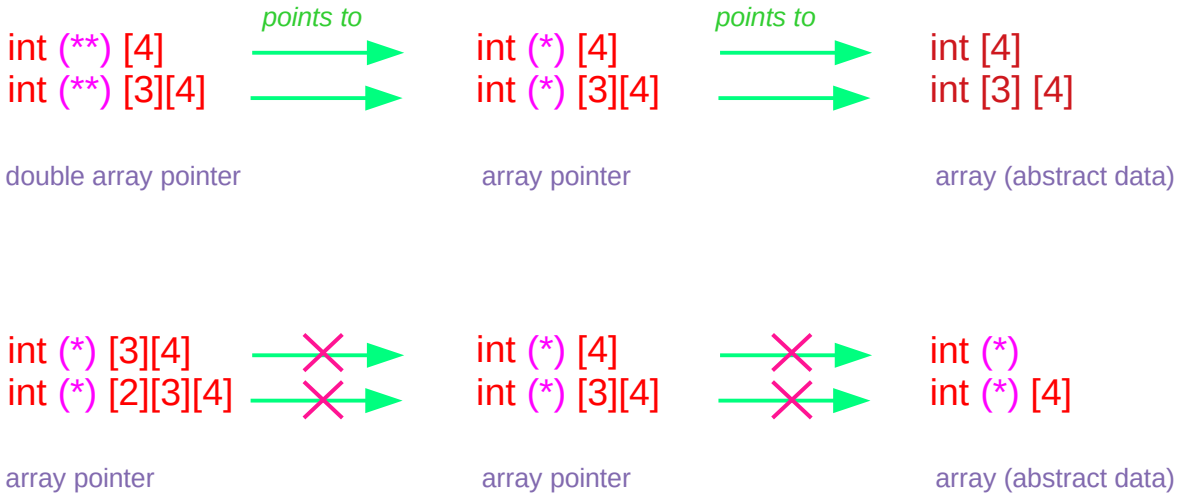

Virtual pointers in a multi-dimensional array

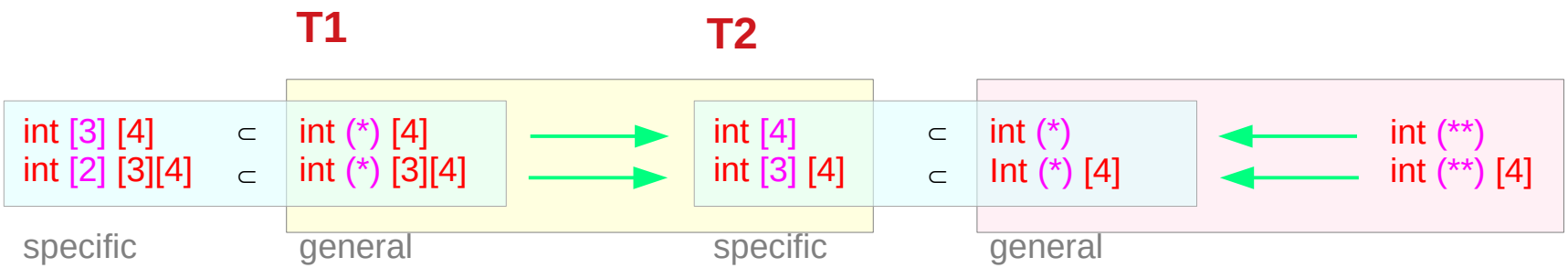

typedef int (*T1) [4];
typedef int (*T1) [3][4];

typedef int T2[4];
typedef int T2[3][4];

int (*) [4]
int (*) [3][4]

general

int [4]
int [3] [4]

specific

T1 a;

T2 b;

a = &**b**;
*__a__ = **b**;

a references **b**

b is a dereference of **a**

T1 is a pointer type
T2 is an array type
T1 has one more dimension than T2

Virtual array pointers – types, sizes, and values

int c[2][3][4];	c[i][j]	c[i][j][0]	
type	int [4] int (*)	int int	• abstract data type • array pointer type
size	sizeof(c[i][j]) =	sizeof(c[i][j][0]) * 4	= sizeof(int) * 4
value (address)	c[i][j] =	&c[i][j][0]	

int c[2][3][4];	c[i]	c[i][0]	
type	int [3][4] int (*)[4]	int [4] int (*)	• abstract data type • array pointer type
size	sizeof(c[i]) =	sizeof(c[i][0]) * 3	= sizeof(int) * 4 * 3
value (address)	c[i] =	&c[i][0]	

int c[2][3][4];	c	c[0]	
type	int [2][3][4] int (*)[3][4]	int [3][4] int (*)[4]	• abstract data type • array pointer type
size	sizeof(c) =	sizeof(c[0]) * 2	= sizeof(int) * 4 * 3 * 2
value (address)	c =	&c[0]	

virtual array pointers c, c[i], c[i][j] – sizes

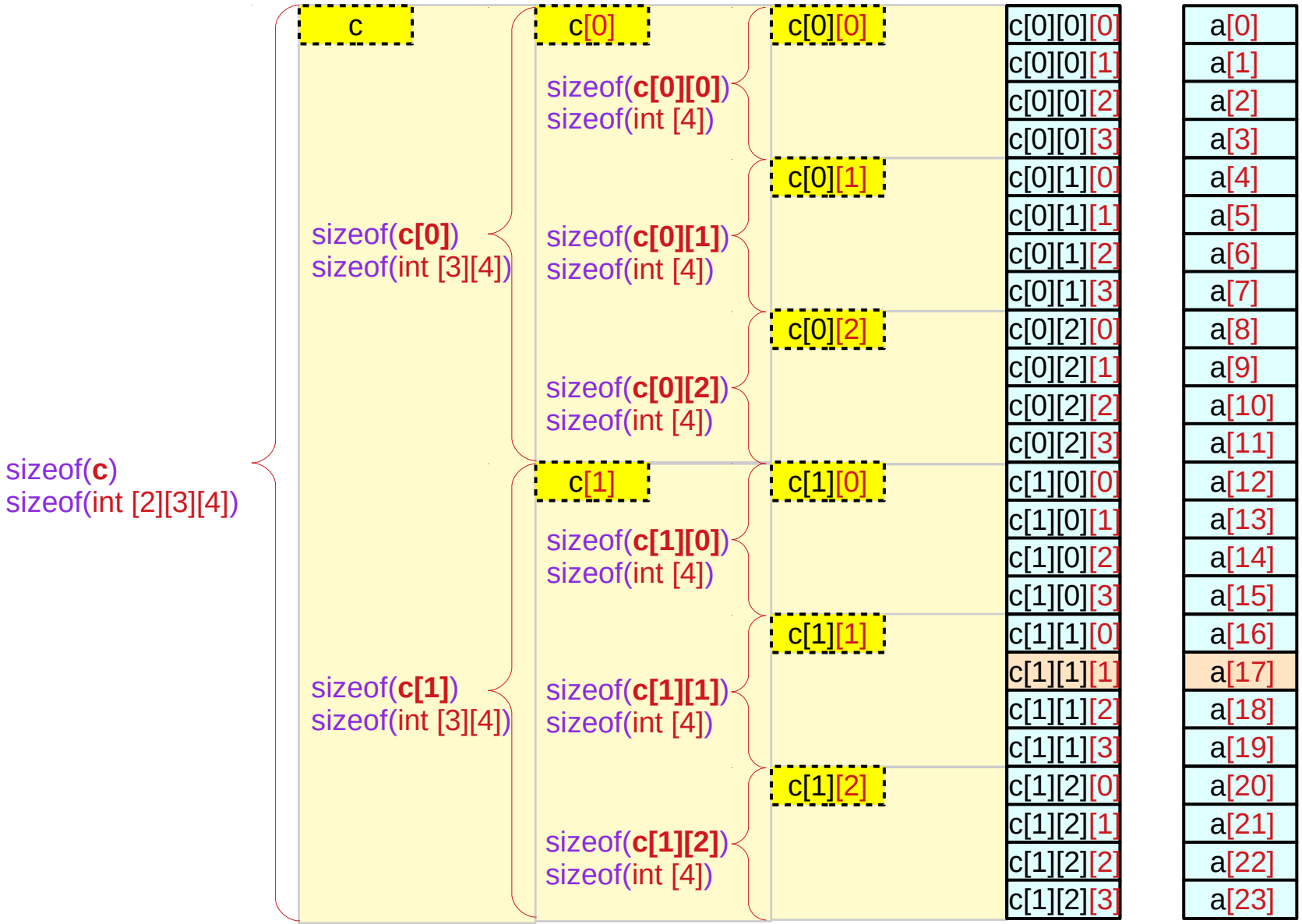

Virtual array pointer c, c[i], c[i][j] – values (addresses)

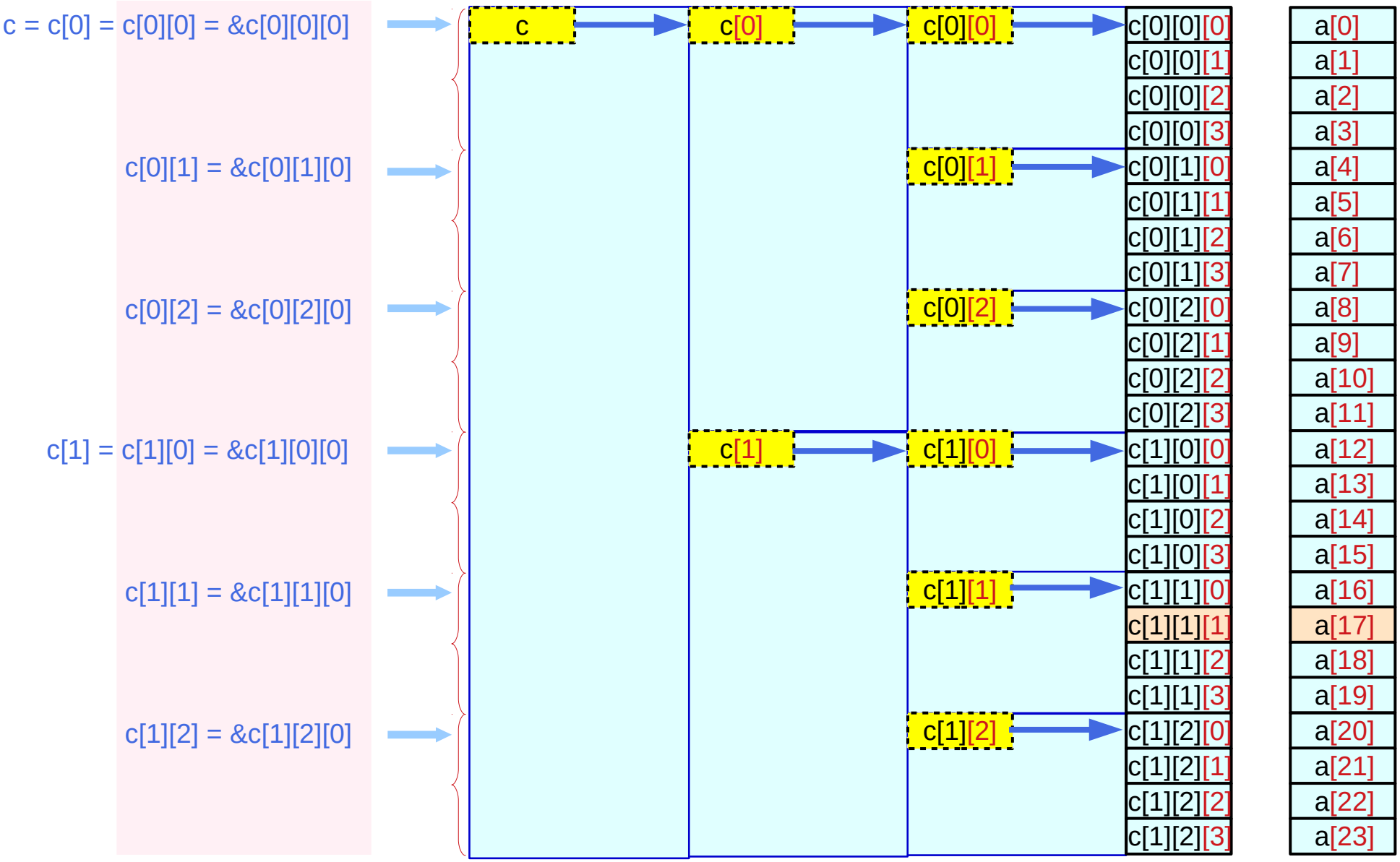

Virtual array pointer c, c[i], c[i][j] – vertical displacement

c = c[0] = c[0][0] = &c[0][0][0]

c[0][1] = &c[0][1][0]

c[0][2] = &c[0][2][0]

c[1] = c[1][0] = &c[1][0][0]

c[1][1] = &c[1][1][0]

c[1][2] = &c[1][2][0]

For address values

Horizontal displacements are <u>not</u> counted

Only vertical displacements are considered

c[0][0][0]	a[0]
c[0][0][1]	a[1]
c[0][0][2]	a[2]
c[0][0][3]	a[3]
c[0][1][0]	a[4]
c[0][1][1]	a[5]
c[0][1][2]	a[6]
c[0][1][3]	a[7]
c[0][2][0]	a[8]
c[0][2][1]	a[9]
c[0][2][2]	a[10]
c[0][2][3]	a[11]
c[1][0][0]	a[12]
c[1][0][1]	a[13]
c[1][0][2]	a[14]
c[1][0][3]	a[15]
c[1][1][0]	a[16]
c[1][1][1]	a[17]
c[1][1][2]	a[18]
c[1][1][3]	a[19]
c[1][2][0]	a[20]
c[1][2][1]	a[21]
c[1][2][2]	a[22]
c[1][2][3]	a[23]

Virtual array pointer c, c[i], c[i][j] – values and types

c = c[0] = c[0][0] = &c[0][0][0]	means	value(c) = value(c[0]) =	value(c[0][0]) =	value(&c[0][0][0])	
		type(c) ≠	type(c[0]) ≠	type(c[0][0]) =	type(&c[0][0][0])
		int (*) [3][4]	int (*) [4]	int *	int *
c[0][1] = &c[0][1][0]	means		value(c[0][1]) =	value(&c[0][1][0])	
			type(c[0][1]) =	type(&c[0][1][0])	
			int *	int *	
c[0][2] = &c[0][2][0]	means		value(c[0][2]) =	value(&c[0][2][0])	
			type(c[0][2]) =	type(&c[0][2][0])	
			int *	int *	
c[1] = c[1][0] = &c[1][0][0]	means	value(c[1]) =	value(c[1][0]) =	value(&c[1][0][0])	
		type(c[1]) ≠	type(c[1][0]) =	type(&c[1][0][0])	
		int (*) [4]	int *	int *	
c[1][1] = &c[1][1][0]	means		value(c[1][1]) =	value(&c[1][1][0])	
			type(c[1][1]) =	type(&c[1][1][0])	
			int *	int *	
c[1][2] = &c[1][2][0]	means		value(c[1][2]) =	value(&c[1][2][0])	
			type(c[1][2]) =	type(&c[1][2][0])	
			int *	int *	

Virtual array pointer c, c[0], c[0][0] – types and sizes

Types – array pointers

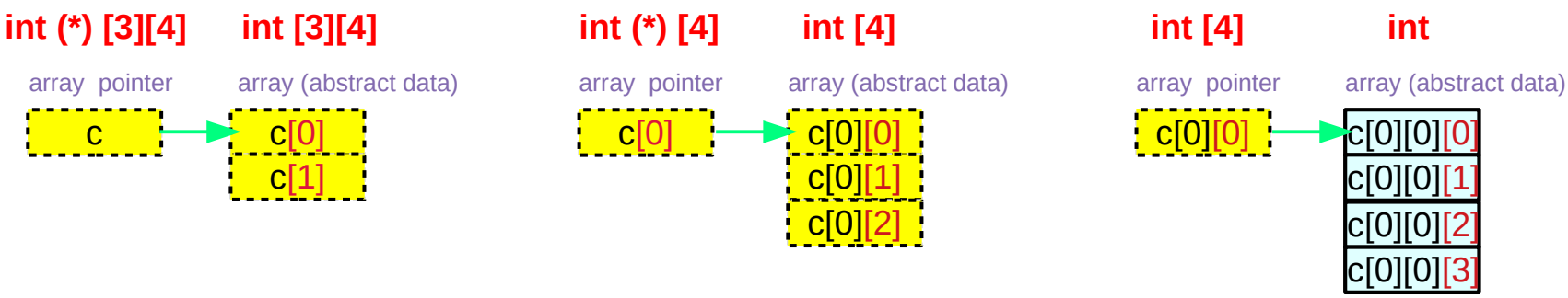

Sizes – abstract data

sizeof(**c**)
sizeof(**c[0]**) * 2
sizeof(**c[0][0]**) * 2 * 3
sizeof(**c[0][0][0]**) * 2 * 3 * 4

sizeof(**int [2][3][4]**)

sizeof(**c[0]**)
sizeof(**c[0][0]**) * 3
sizeof(**c[0][0][0]**) * 3 * 4

sizeof(**int [3][4]**)

sizeof(**c[0][0]**)
sizeof(**c[0][0][0]**) * 4

sizeof(**int [4]**)

sizeof(**c[0][0][0]**)

sizeof(**int**)

sizeof(**int [2][3][4]**) = 96
sizeof(**int (*)[3][4]**) = 4 / 8

sizeof(**int [3][4]**) = 48
sizeof(**int (*)[4]**) = 4 / 8

sizeof(**int [4]**) = 16
sizeof(**int (*)**) = 4 / 8

sizeof(**int**) = 4

Abstract Data c, c[i], c[i][j] – start addresses and sizes

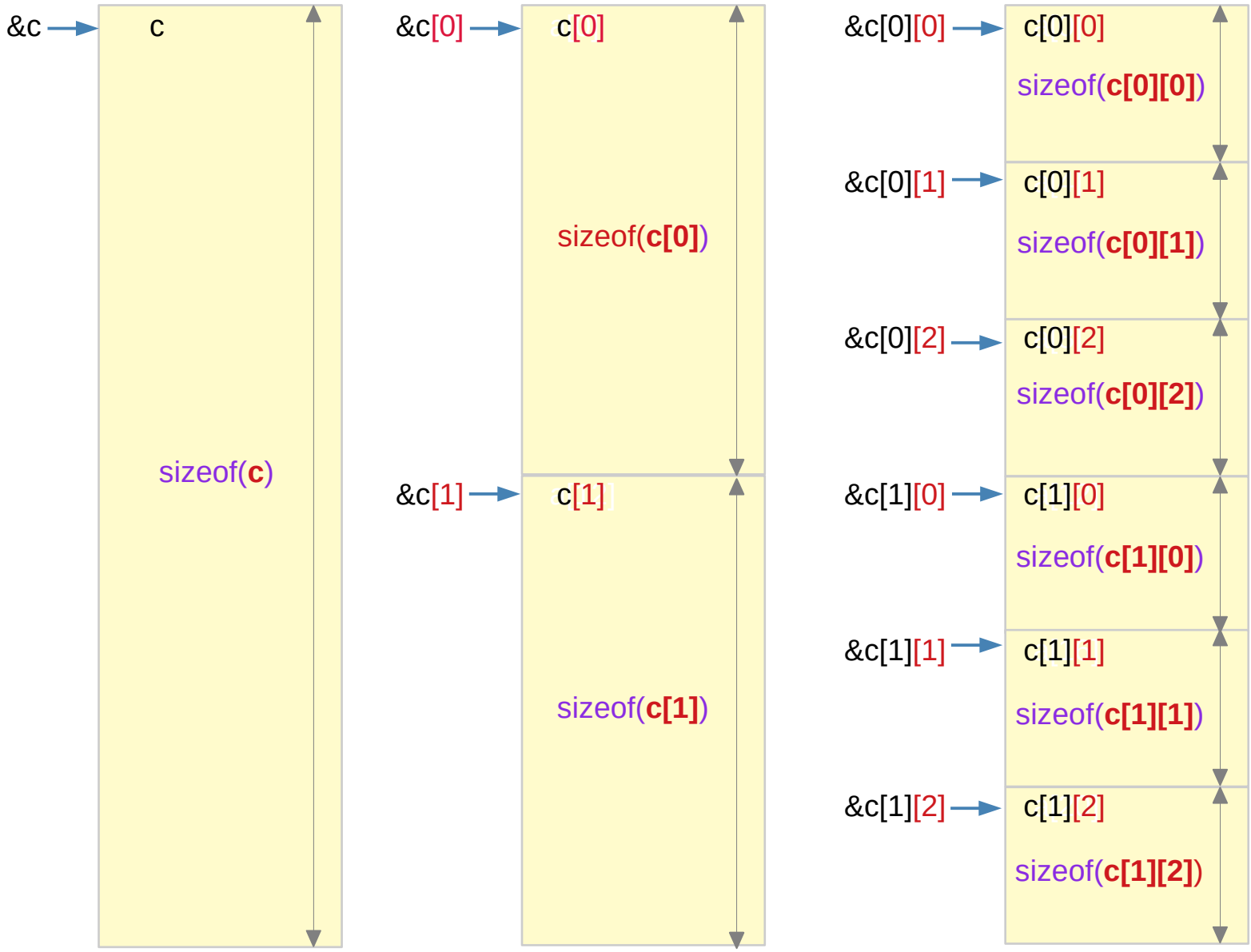

c[0][0][0]
c[0][0][1]
c[0][0][2]
c[0][0][3]
c[0][1][0]
c[0][1][1]
c[0][1][2]
c[0][1][3]
c[0][2][0]
c[0][2][1]
c[0][2][2]
c[0][2][3]
c[1][0][0]
c[1][0][1]
c[1][0][2]
c[1][0][3]
c[1][1][0]
c[1][1][1]
c[1][1][2]
c[1][1][3]
c[1][2][0]
c[1][2][1]
c[1][2][2]
c[1][2][3]

Types in a multi-dimensional array

```
int     c [2][3][4];
```

abstract data int [2] [3][4]

array pointer int (*) [3][4]

c → *c (x 2)

int [3] [4] abstract data

int (*) [4] array pointer

abstract data int [3] [4]

array pointer int (*) [4]

c[i] → *c[i] (x 3)

int [4] abstract data

int (*) array pointer

abstract data int [4]

array pointer int (*)

c[i][j] → *c[i][j] (x 4)

int primitive data

Virtual array pointers and abstract data

```
int     c [2][3][4];
```

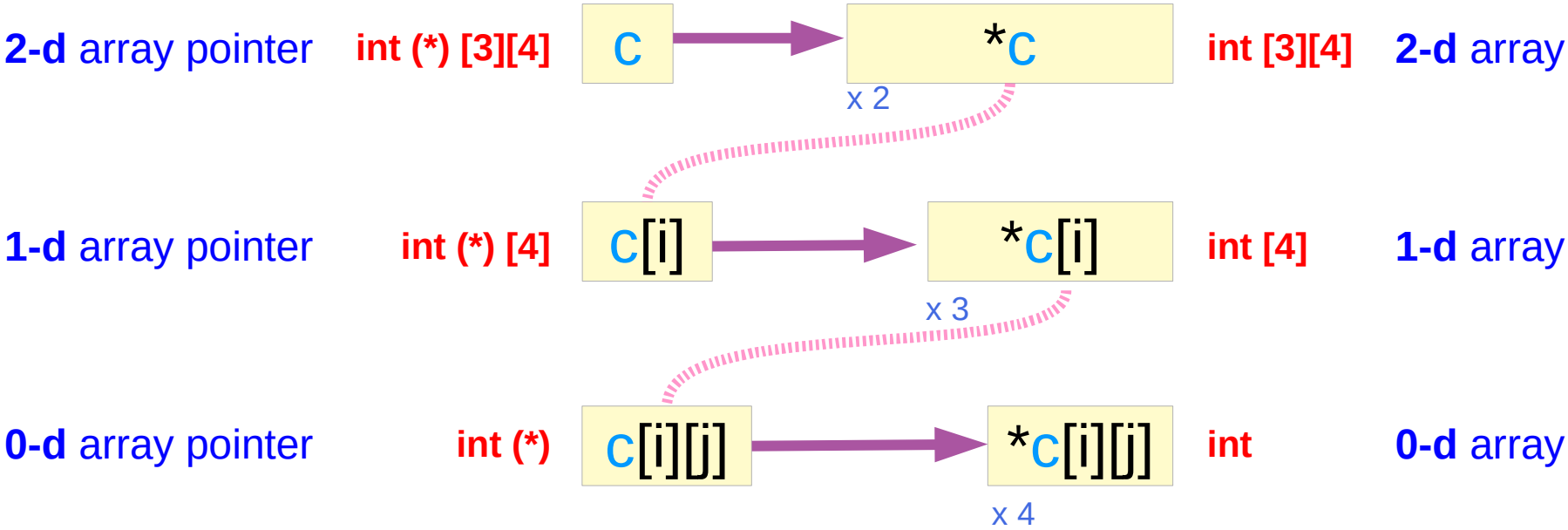

all these pointers are virtual, and take no actual memory locations

exploiting the **contiguity** of allocated memory locations

Abstract Data Sizes

```
int     c [2][3][4];
```

the size of a pointer type is fixed
Here, the sizes of virtual pointers are shown
i.e, the sizes of different abstract data types

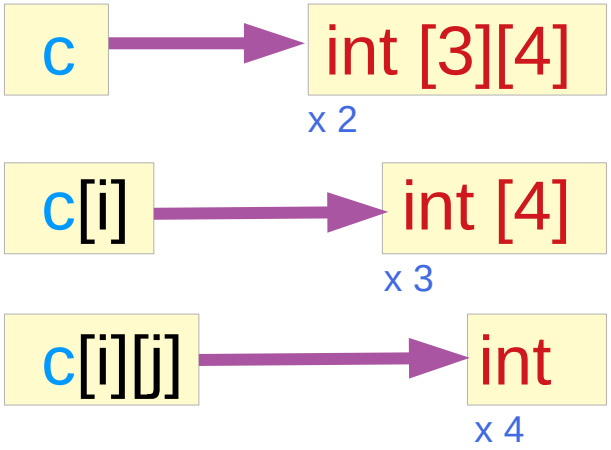


```
sizeof( c)          =  sizeof(int [2][3][4])
sizeof(*c)          =  sizeof(int [3][4])

sizeof( c[i])       =  sizeof(int [3][4])
sizeof(*c[i])       =  sizeof(int [4])

sizeof( c[i][j])    =  sizeof(int [4])
sizeof(*c[i][j])    =  sizeof(int)
```

all are sizes of arrays

c, c[i], c[i][j] are virtual array pointers
and they are also abstract data (arrays)

when sizes are considered,
view them as abstract data (arrays)

Virtual array pointer sizes and abstract data sizes

```
int     c [2][3][4];
```

size of a virtual array pointer = size of the pointed abstract data type * the number of such types

c → int [3][4]
x 2

c[i] → int [4]
x 3

c[i][j] → int
x 4

sizeof(c) = sizeof(*c) * **2**

sizeof(c[i]) = sizeof(*c[i]) * **3**

sizeof(c[i][j]) = sizeof(*c[i][j]) * **4**

Sizes of array pointer types

```
int     c [2][3][4];
```

c → int [3][4]

c[i] → int [4]

c[i][j] → int

not real array pointers
virtual array pointers

c int (*)[3][4]
sizeof(int (*) [3][4]) = pointer size ≠ sizeof(c)

c[i] int (*) [4]
sizeof(int (*) [4]) = pointer size ≠ sizeof(c[i])

c[i][j] int [4]
sizeof(int [4]) = pointer size ≠ sizeof(c[i][j])

4 bytes for 32-bit machines
8 bytes for 64-bit machines

Hierarchical nested array pointers

```
int     c [2][3][4];
```

c points to a **2-d** array
increment size: sizeof(int)*2*3*4

int (*) [3][4]

c → int [3][4]

c[i] points to an **1-d** array
increment size: sizeof(int)*3*4

int (*) [4]

c[i] → int [4]

c[i][j] points to an integer
increment size: sizeof(int)*4

int (*)

c[i][j] → int

Types of array pointers in a 3-d array

```
int c[2][3][4];
```

c[i][j][k]	:: int	int
c[i][j]	:: int [4] [k]	int (*) [k]
c[i]	:: int [3][4] [j] [k]	int (*)[4] [j] [k]
c	:: int [2][3][4] [i] [j] [k]	int (*)[3][4] [i] [j] [k]
	array type (name)	**array pointer type**

Sizes of array pointers in a 3-d array

```
int c[2][3][4];
```

sizeof(**c[i][j][k]**) = sizeof(int)

sizeof(**c[i][j]**) = sizeof(int) * 4
[k]

sizeof(**c[i]**) = sizeof(int) * 3 * 4
[j] [k]

sizeof(**c**) = sizeof(int) * 2 * 3 * 4
[i] [j] [k]

Address values of array pointers in a 3-d array

```
int c[2][3][4];
```

c[i][j][k] = &c[i][j][k]

c[i][j]+k = &c[i][j][0] + k * sizeof(c[i][j][k])

sizeof(*c[i][j])
= sizeof(c[i][j][0]) = sizeof(int)

c[i]+j = &c[i][0][0] + j * sizeof(c[i][j])

sizeof(*c[i])
= sizeof(c[i][0]) = sizeof(int) * 4
[k]

c+i = &c[0][0][0] + i * sizeof(c[i])

sizeof(*c)
= sizeof(c[0]) = sizeof(int) * 3 * 4
[j] [k]

Summary of array pointers in a 3-d array

c[i] ≡ *(c +i)	c[i][j] ≡ *(c[i] +j)	c[i][j][k]≡ *(c[i][j] +k)
int (*) [3][4] 2-d array pointer c int [2] [3][4] 3-d array name c	int (*) [4] 1-d array pointers c[i] Int [3] [4] 2-d array names c[i]	int (*) 0-d array pointers c[i][j] int [4] 1-d array names c[i][j]
address value c + i &c[0][0][0] + i * sizeof(*c) &c[0][0][0] + i * sizeof(c[0]) &c[0][0][0] + i * 4 * 3 * 4	**address value** c[i] + j &c[i][0][0] + j * sizeof(*c[i]) &c[i][0][0] + j * sizeof(c[i][0]) &c[i][0][0] + j * 4 * 4	**address value** c[i][j] + k &c[i][j][0] + k * sizeof(*c[i][j]) &c[i][j][0] + k * sizeof(c[i][j][0]) &c[i][j][0] + k * 4
leading elements c[0][0][0]	**leading elements** c[0][0][0] c[1][0][0]	**leading elements** c[0][0][0] c[0][1][0] c[0][2][0] c[1][0][0] c[1][1][0] c[1][2][0]

Sub-array properties in multi-dimensional arrays

int c [2][3][4]; ➡ 3-d access c **[i][j][k]**

2-d array pointer	c	int (*) [3][4]
1-d array pointers	c[i]	int (*) [4]
0-d array pointers	c[i][j]	int (*)

Hierarchical Sub-arrays in a 3-d array

```
int    c [L][M][N];

       c [i][j][k]
```

left-to-right associativity

c	[i]	[j][k]
c[i]	[j]	[k]
c[i][j]	[k]	

Array Names and Types

Pointers to hierarchical sub-arrays

c	3-d array names	int (*) [M][N]	2-d array pointer
c[i]	2-d array names	int (*) [N]	1-d array pointer
c[i][j]	1-d array names	int (*)	0-d array pointer

General requirements for accessing **c[i][j][k]**

c [i][j][k]

&c[i][j][k] = c[i][j]+k
&c[i][j] = c[i]+j
&c[i] = c+i

&c[i][j][0] = c[i][j]
&c[i][0] = c[i]
&c[0] = c

c[i][j][k] = *(c[i][j]+k)
c[i][j] = *(c[i]+j)
c[i] = *(c+i)

c[i][j][0] = *(c[i][j])
c[i][0] = *(c[i])
c[0] = *(c)

3-d access pattern **c[i][j][k]**

General requirements

```
c [i][j][k]
```

```
&c[i][j][k]  = c[i][j]+k
&c[i][j]     = c[i]+j
&c[i]        = c+i
```

```
&c[i][j][0]  = c[i][j]
&c[i][0]     = c[i]
&c[0]        = c
```

Pointer array approach

```
int** c[2];
int*  b[2*3];
int   c[2*3*4];
```

```
c[i][j][k]    :: int
c[i][j]       :: int *
c[i]          :: int **
```

```
c[i]  ⇐  &b[i*3]
b[j]  ⇐  &a[j*4]
```

Explicit
Arrays of pointers with
Multiple Indirection

N-dim Array approach

```
int c[2][3][4];
```

```
c[i][j][k]    :: int
c[i][j]       :: int [4]
c[i]          :: int (*) [4]
```

```
c[i][j]  ⇐  &c[i][j][0]
c[i]     ⇐  &c[i][0][0]
c        ⇐  &c[0][0][0]
```

Implicit
Nested
Virtual Array Pointers

3-d access pattern **c[i][j][k]** – array pointer approach

General requirements

c [i][j][k]

&c[i][j][k] = c[i][j]+k
&c[i][j] = c[i]+j
&c[i] = c+i

&c[i][j][0] = c[i][j]
&c[i][0] = c[i]
&c[0] = c

N-dim array approach

int c[2][3][4];

c[i][j][k] :: int
c[i][j] :: int [4]
c[i] :: int (*) [4]
c :: int (*) [3][4]

c[i][j] ⇐ &c[i][j][0]
c[i] ⇐ &c[i][0][0]
c ⇐ &c[0][0][0]

Implicit
Nested
Virtual Array Pointers

Using N-dimensional arrays

```
int     c [2][3][4];
```

```
        c [i][j][k];
```

constraints

c	⇐	&c[0][0][0]
c[i]	⇐	&c[i][0][0]
c[i][j]	⇐	&c[i][j][0]

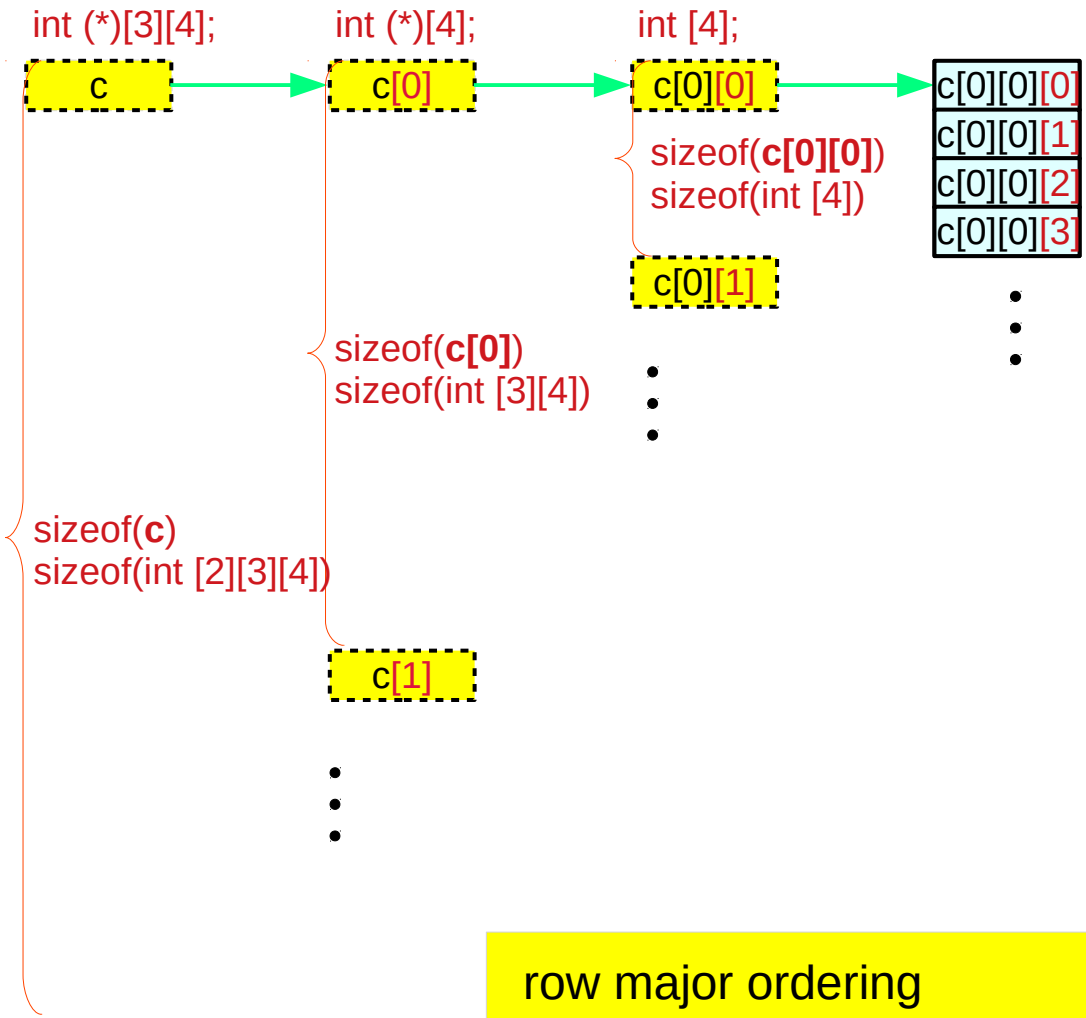

row major ordering
contiguous linear layout

Types of **c[i]** and **c[i][j]**

```
c [i][j][k];
```

```
&c[i][j][0]  = c[i][j]
&c[i][0]     = c[i]
&c[0]        = c
```

```
&c[i][j][k]  = c[i][j]+k
&c[i][j]     = c[i]+j
&c[i]        = c+i
```

```
int     c [2][3][4];
```

c[i] virtual array pointer of the type int (*) [4]
c[i][j] : the name of 1-d array with 4 integers int [4]

c[i][j] (virtual array) pointer of the type int (*)
c[i][j][k] : an element of a 4-integer array int

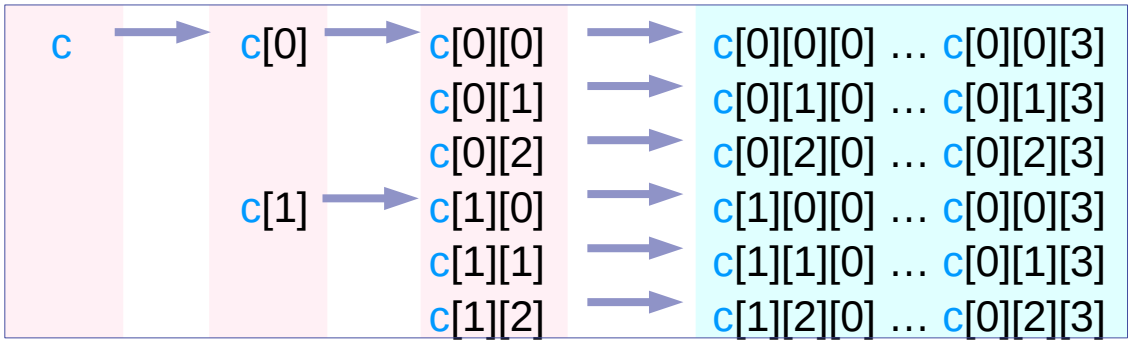

int [2] [3][4]	int [3] [4]	int [4]	int	…	int
int (*) [3][4]	int (*) [4]	int (*)	int	…	int
pointers to a 2-d array	pointers to a 1-d array	1-d array names	leading element of 4-integer array		

Values of **c[i]** and **c[i][j]**

```
c [i][j][k];
```

```
&c[i][j][0]  = c[i][j]
&c[i][0]     = c[i]
&c[0]        = c
```

```
&c[i][j][k]  = c[i][j]+k
&c[i][j]     = c[i]+j
&c[i]        = c+i
```

```
int     c [2][3][4];
```

virtual array pointers
in each row in the following figure
have the same value (address value)

c	=	c[0]	=	c[0][0]	=	&c[0][0][0]
				c[0][1]	=	&c[0][1][0]
				c[0][2]	=	&c[0][2][0]
		c[1]	=	c[1][0]	=	&c[1][0][0]
				c[1][1]	=	&c[1][1][0]
				c[1][2]	=	&c[1][2][0]

Horizontal displacements are not counted
only **vertical displacements** are considered
for address values

```
c[i][j] = &c[i][j][0]
c[i]    = &c[i][0][0]
c       = &c[0][0][0]
```

Finding address values of **c**, **c[i]**, **c[i][j]**

```
c [i][j][k];
```

```
&c[i][j][0]  = c[i][j]
&c[i][0]     = c[i]
&c[0]        = c
```

```
&c[i][j][k]  = c[i][j]+k
&c[i][j]     = c[i]+j
&c[i]        = c+i
```

```
int     c [2][3][4];
```

```
c[i][j] = &c[i][j][0]
c[i]    = &c[i][0][0]
c       = &c[0][0][0]
```

append [0] to the right

c	$\overset{+[0]}{=}$	c[0]	$\overset{+[0]}{=}$	c[0][0]	$\overset{+[0]}{=}$	&c[0][0][0]
				c[0][1]	$\overset{+[0]}{=}$	&c[0][1][0]
				c[0][2]	$\overset{+[0]}{=}$	&c[0][2][0]
		c[1]	$\overset{+[0]}{=}$	c[1][0]	$\overset{+[0]}{=}$	&c[1][0][0]
				c[1][1]	$\overset{+[0]}{=}$	&c[1][1][0]
				c[1][2]	$\overset{+[0]}{=}$	&c[1][2][0]
int (*) [3][4]		int (*) [4]		int [4]		int

c[i][j][0] : leading elements of c[i][j]

```
&c[0][0][0]
&c[0][1][0]
&c[0][2][0]
&c[1][0][0]
&c[1][1][0]
&c[1][2][0]
```

c[i][0][0] : leading elements of c[i]

```
&c[0][0][0]

&c[1][0][0]
```

c[0][0][0] : leading elements of c

```
&c[0][0][0]
```

Finding sub arrays for the leading elements **c[i][j][0]**

```
c [i][j][k];
```

```
&c[i][j][0]  = c[i][j]
&c[i][0]     = c[i]
&c[0]        = c
```

```
&c[i][j][k]  = c[i][j]+k
&c[i][j]     = c[i]+j
&c[i]        = c+i
```

```
int     c [2][3][4];
```

```
c[i][j] = &c[i][j][0]
c[i]    = &c[i][0][0]
c       = &c[0][0][0]
```

delete [0] from the right

&c[0][0][0]	-[0] =	c[0][0]	-[0] =	c[0]	-[0] =	c
&c[0][1][0]	-[0] =	c[0][1]				
&c[0][2][0]	-[0] =	c[0][2]				
&c[1][0][0]	-[0] =	c[1][0]	-[0] =	c[1]		
&c[1][1][0]	-[0] =	c[1][1]				
&c[1][2][0]	-[0] =	c[1][2]				
int		int [4]		int (*) [4]		int (*) [3][4]

c[0][0][0] is the leading element of c[0][0], c[0], c
c[0][1][0] is the leading element of c[0][1]
c[0][2][0] is the leading element of c[0][2]
c[1][0][0] is the leading element of c[1][0], c[1]
c[1][1][0] is the leading element of c[1][1]
c[1][2][0] is the leading element of c[1][2]

multi-dimensional arrays

```
c[i][j] = &c[i][j][0]
c[i]    = &c[i][0][0]
c       = &c[0][0][0]
```

```
&c[i][j][0]  = c[i][j]
&c[i][0]     = c[i]
&c[0]        = c
```

Pointer reference and dereference relationship

```
c [i][j][k];
```

```
&c[i][j][0]  = c[i][j]
&c[i][0]     = c[i]
&c[0]        = c
```

```
&c[i][j][k]  = c[i][j]+k
&c[i][j]     = c[i]+j
&c[i]        = c+i
```

```
int     c [2][3][4];
```

```
c → c[0] → c[0][0] → c[0][0][0]
           c[0][1] → c[0][1][0]
           c[0][2] → c[0][2][0]
     c[1] → c[1][0] → c[1][0][0]
           c[1][1] → c[1][1][0]
           c[1][2] → c[1][2][0]
```

```
                c[i][j]   =   &c[i][j][0]
c → c[0] → c[0][0]  ==  &c[0][0][0]
           c[0][1]  ==  &c[0][1][0]
           c[0][2]  ==  &c[0][2][0]
     c[1] → c[1][0]  ==  &c[1][0][0]
           c[1][1]  ==  &c[1][1][0]
           c[1][2]  ==  &c[1][2][0]
```

```
          c[i]   =   &c[i][0]
c → c[0]  ==  &c[0][0]
    c[1]  ==  &c[1][0]
```

```
c   =   &c[0]
c   ==   c[0]
```

General requirements for **c[i][j][k]**

```
c [i][j][k];
```

```
&c[i][j][0]  = c[i][j]
&c[i][0]     = c[i]
&c[0]        = c
```

```
&c[i][j][k]  = c[i][j]+k
&c[i][j]     = c[i]+j
&c[i]        = c+i
```

```
int     c [2][3][4];
```

c[i][j] virtual array pointer of the type int (*)
c[i][j][0] : leading element of a 4-integer array int

```
*(c[0][0]+0) = c[0][0][0]
*(c[0][1]+0) = c[0][1][0]
*(c[0][2]+0) = c[0][2][0]
*(c[1][0]+0) = c[1][0][0]
*(c[1][1]+0) = c[1][1][0]
*(c[1][2]+0) = c[1][2][0]
```

c[0][0] is the address of c[0][0][0]
c[0][1] is the address of c[0][1][0]
c[0][2] is the address of c[0][2][0]
c[1][0] is the address of c[1][0][0]
c[1][1] is the address of c[1][1][0]
c[1][2] is the address of c[1][2][0]

c[i] virtual array pointer of the type int (*) [4]
c[i][j] : a 4-element 1-d array name int [4]

```
*(c[0]+0)  = c[0][0]
*(c[1]+0)  = c[1][0]
```

c[0] is the address of c[0][0]
c[1] is the address of c[1][0]

```
c[i][j] = &c[i][j][0]
c[i]    = &c[i][0][0]
c       = &c[0][0][0]
```

```
&c[i][j][0]  = c[i][j]
&c[i][0]     = c[i]
&c[0]        = c
```

multi-dimensional arrays

```
c[i][j] = &c[i][j][0]
c[i]    = &c[i][0][0]
c       = &c[0][0][0]
```

```
&c[i][j][0]  = c[i][j]
&c[i][0]     = c[i]
&c[0]        = c
```

c[0] = c[0][0] relation

```
c [i][j][k];
```

```
&c[i][j][0]  = c[i][j]
&c[i][0]     = c[i]
&c[0]        = c
```

```
&c[i][j][k]  = c[i][j]+k
&c[i][j]     = c[i]+j
&c[i]        = c+i
```

```
int     c [2][3][4];
```

c == c[0] == c[0][0] == &c[0][0][0]

value(c[0]) = &c[0][0][0]
value(c[0][0]) = &c[0][0][0]

type(c[0]) = int (*)[4]
type(c[0][0]) = int [4]

c[0] = c[0][0] *means*
value(c[0]) = **value(c[0][0])**

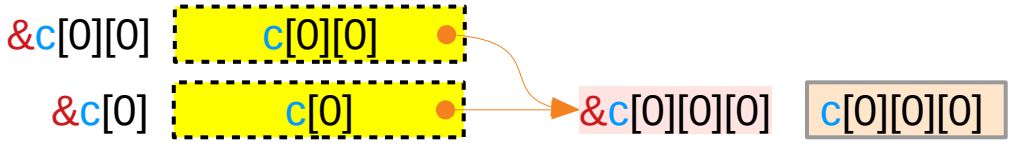


```
c[i][j] = &c[i][j][0]
c[i]    = &c[i][0][0]
c       = &c[0][0][0]
```

Addresses and Values of **c[0]** and **c[0][0]**

```
c [i][j][k];
```

```
&c[i][j][0]  = c[i][j]
&c[i][0]     = c[i]
&c[0]        = c
```

```
&c[i][j][k]  = c[i][j]+k
&c[i][j]     = c[i]+j
&c[i]        = c+i
```

```
int     c [2][3][4];
```

c → c[0] → c[0][0] = &c[0][0][0]

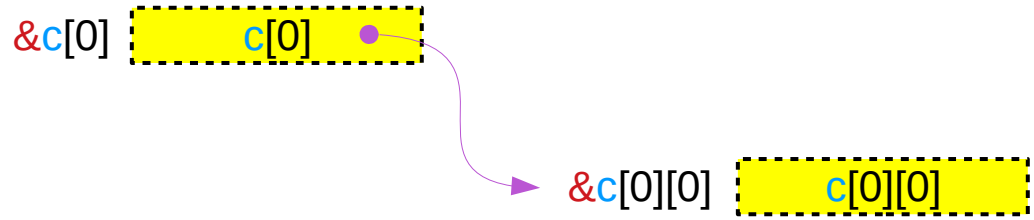

c = c[0] = c[0][0] = &c[0][0][0]

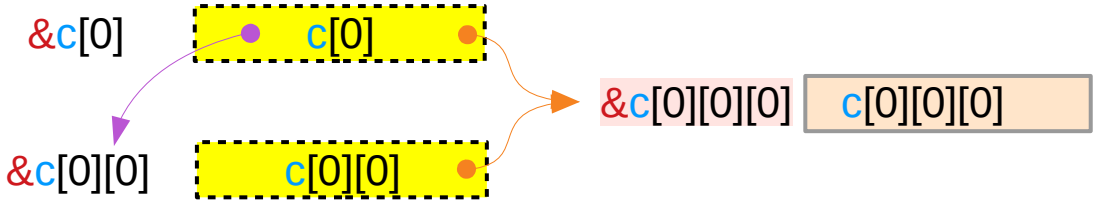

A virtual pointer's <u>address</u> and <u>value</u> are the same

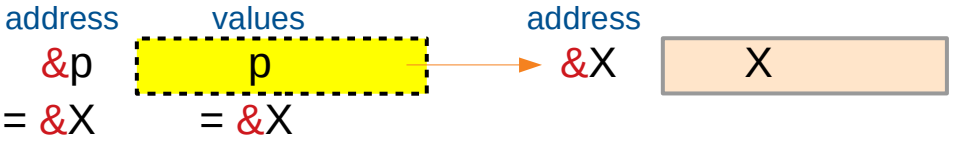

c[0] and c[0][0] point to the same c[i][0][0]

```
c [i][j][k];
```

```
&c[i][j][0]  = c[i][j]
&c[i][0]     = c[i]
&c[0]        = c
```

```
&c[i][j][k]  = c[i][j]+k
&c[i][j]     = c[i]+j
&c[i]        = c+i
```

```
int     c [2][3][4];
```

```
c[i][j] = &c[i][j][0]
c[i]    = &c[i][0][0]
c       = &c[0][0][0]
```

c =	c[0] =	c[0][0] =	&c[0][0][0]	⬅ value
int(*)[3][4]	int(*)[4]	int(*)	int	⬅ type

c[1] =	c[1][0] =	&c[1][0][0]	⬅ value
int(*)[4]	int(*)	int	⬅ type

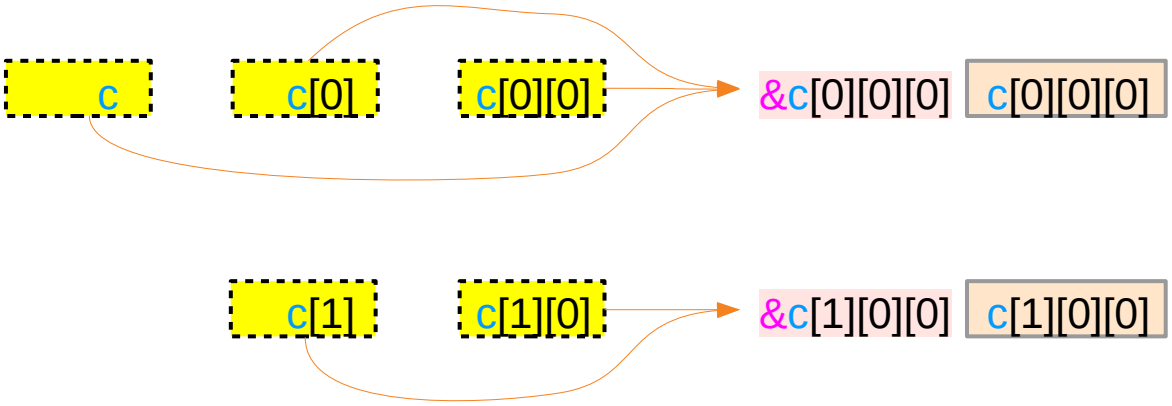

These virtual pointers have different types
but the same value (address)

&c[i][0] and &c[i][0][0] – equivalence relations

```
c [i][j][k];
```

```
&c[i][j][0]  = c[i][j]
&c[i][0]     = c[i]
&c[0]        = c
```

```
&c[i][j][k]  = c[i][j]+k
&c[i][j]     = c[i]+j
&c[i]        = c+i
```

```
int     c [2][3][4];
```

```
c[i][j] = &c[i][j][0]
c[i]    = &c[i][0][0]
c       = &c[0][0][0]
```

int(*)[3][4] int(*)[4] int(*) int *

c = c[0] = c[0][0] = &c[0][0][0]

&

&c &c[0] &c[0][0]

equivalences

```
c    ≡ &c[0],
c[0] ≡ &c[0][0]
c[0][0] ≡ &c[0][0][0]
```

c[1] = c[1][0] = &c[1][0][0]

&

&c[1] &c[1][0]

equivalences

```
c[1] ≡ &c[1][0]
c[1][0] ≡ &c[1][0][0]
```

Horizontal displacements are <u>not</u> counted
only **vertical displacements** are considered
for **<u>address values</u>**

equivalences

```
c    ≡ &c[0],
c[i] ≡ &c[i][0]
c[i][0] ≡ &c[i][0][0]
```

c[i] = &c[i] and c[i][0] = &c[i][0]

```
c [i][j][k];
```

```
&c[i][j][0]  = c[i][j]
&c[i][0]     = c[i]
&c[0]        = c
```

```
&c[i][j][k]  = c[i][j]+k
&c[i][j]     = c[i]+j
&c[i]        = c+i
```

```
int     c [2][3][4];
```

```
c[i][j] = &c[i][j][0]
c[i]    = &c[i][0][0]
c       = &c[0][0][0]
```

```
c =   c[0] =   c[0][0]= &c[0][0][0]
||      ||      ||
&c =  &c[0] =  &c[0][0]
```

```
c[1] =   c[1][0] = &c[1][0][0]
||        ||
&c[1] =  &c[1][0]
```

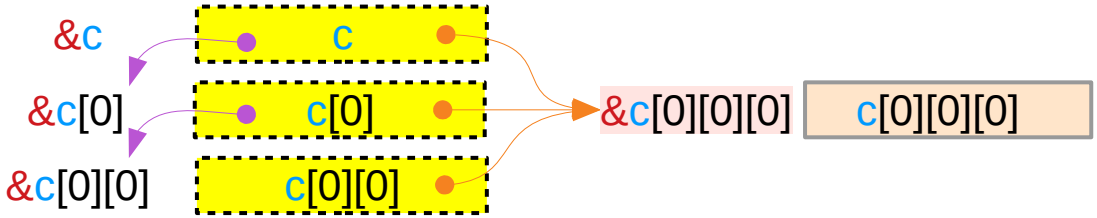

c[i] = &c[i] and c[i][0] = &c[i][0]

```
c [i][j][k];
```

```
&c[i][j][0]  = c[i][j]
&c[i][0]     = c[i]
&c[0]        = c
```

```
&c[i][j][k]  = c[i][j]+k
&c[i][j]     = c[i]+j
&c[i]        = c+i
```

```
int     c [2][3][4];
```

```
c[i][j] = &c[i][j][0]
c[i]    = &c[i][0][0]
c       = &c[0][0][0]
```

A virtual pointer's address and value are the same

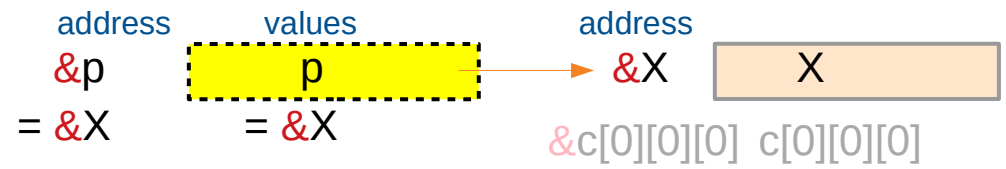

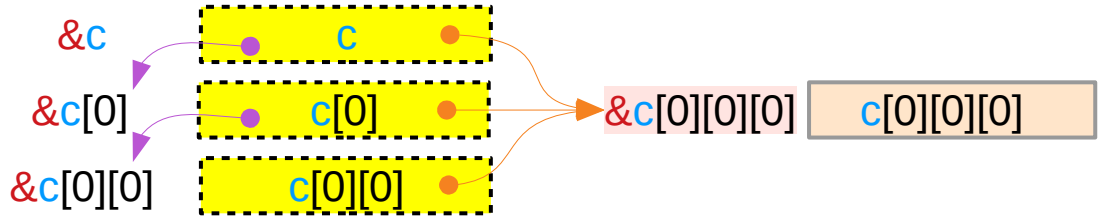

Leading elements and array pointers

c[0][0][0] is the leading element of c[0][0], c[0], c
c[0][1][0] is the leading element of c[0][1]
c[0][2][0] is the leading element of c[0][2]
c[1][0][0] is the leading element of c[1][0], c[1]
c[1][1][0] is the leading element of c[1][1]
c[1][2][0] is the leading element of c[1][2]

Array Pointers to **c[i][0][0]**

```
c [i][j][k];
```

```
&c[i][j][0]  = c[i][j]
&c[i][0]     = c[i]
&c[0]        = c
```

```
&c[i][j][k]  = c[i][j]+k
&c[i][j]     = c[i]+j
&c[i]        = c+i
```

```
int     c [2][3][4];
```

```
c[i][j] = &c[i][j][0]
c[i]    = &c[i][0][0]
c       = &c[0][0][0]
```

&c[i][0][0] ≡ c[i][0]

||

&c[i][0] ≡ c[i]

||

&c[i] ≡ c+i

virtual pointers:
the address of a pointer is
the same as its value

= c + i*sizeof(*c)

= &c[0][0][0] + i*3*4

delete [0] from the right

&c[0][0][0]	$\overset{-[0]}{=}$	c[0][0]	$\overset{-[0]}{=}$	c[0]	$\overset{-[0]}{=}$	c
&c[1][0][0]	$\overset{-[0]}{=}$	c[1][0]	$\overset{-[0]}{=}$	c[1]		

Array Pointers to **c[i][j][0]**

```
c [i][j][k];
```

```
&c[i][j][0]  = c[i][j]
&c[i][0]     = c[i]
&c[0]        = c
```

```
&c[i][j][k]  = c[i][j]+k
&c[i][j]     = c[i]+j
&c[i]        = c+i
```

```
int     c [2][3][4];
```

```
c[i][j] = &c[i][j][0]
c[i]    = &c[i][0][0]
c       = &c[0][0][0]
```

&c[i][j][0] ≡ c[i][j]

||

&c[i][j] ≡ c[i] + j

= c[i] + j*sizeof(*c[i])

= c + i*sizeof(*c) + j*4

= &c[0][0][0] + i*3*4 + j*4

delete [0] from the right

&c[0][0][0]	$\overset{-[0]}{=}$	c[0][0]	$\overset{-[0]}{=}$	c[0]	$\overset{-[0]}{=}$	c
&c[0][1][0]	$\overset{-[0]}{=}$	c[0][1]				
&c[0][2][0]	$\overset{-[0]}{=}$	c[0][2]				
&c[1][0][0]	$\overset{-[0]}{=}$	c[1][0]	$\overset{-[0]}{=}$	c[1]		
&c[1][1][0]	$\overset{-[0]}{=}$	c[1][1]				
&c[1][2][0]	$\overset{-[0]}{=}$	c[1][2]				

Contiguity Constraints

c **[i][j][k]**;

Virtual Array Pointers and Contiguity

Using array pointers

int (*) [N]	int (*) [M][N]	int (*) [L][M][N]	Array Pointer
↓	↓	↓	
int [N]	int [M][N]	int [L][M][N]	Array Name
int (*)	int (*) [N]	int (*)[M][N]	Array Pointer

Array pointer approach – contiguity constraints

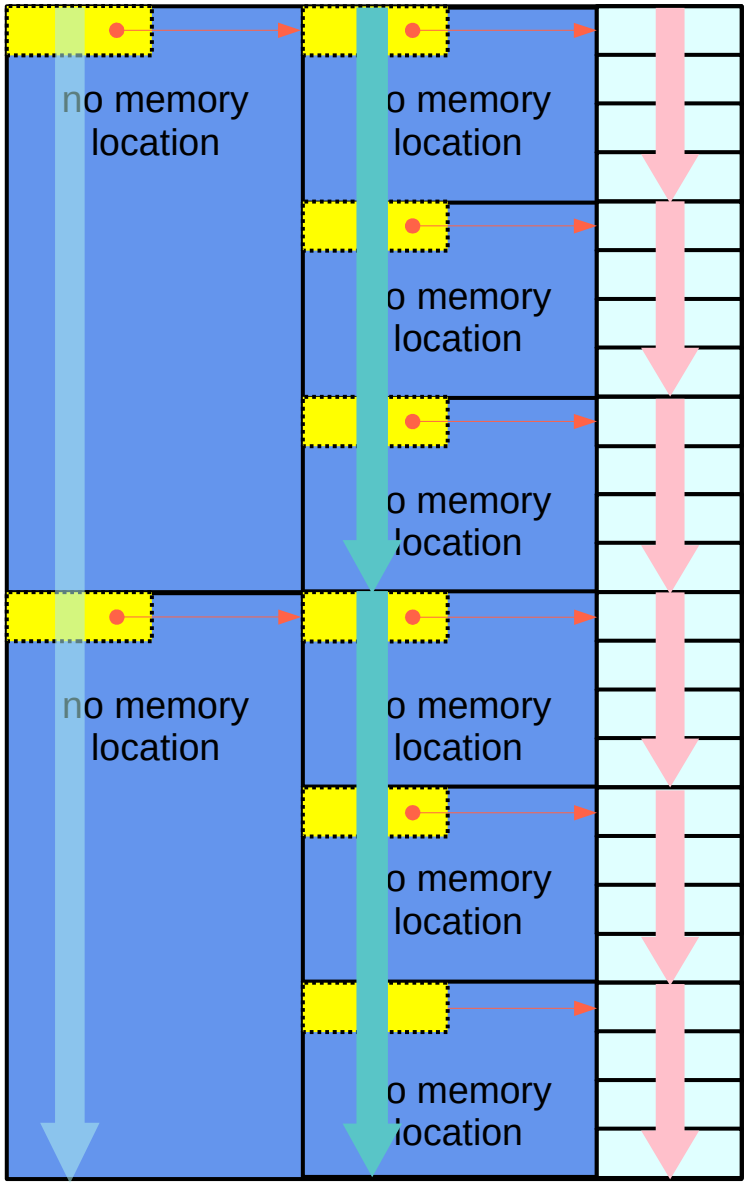

Array Pointer Approach (pointer to arrays)

Equivalence and contiguity (1)

consecutive address — consecutive data

*(X+n) ≡ X[n]

contiguous index : n

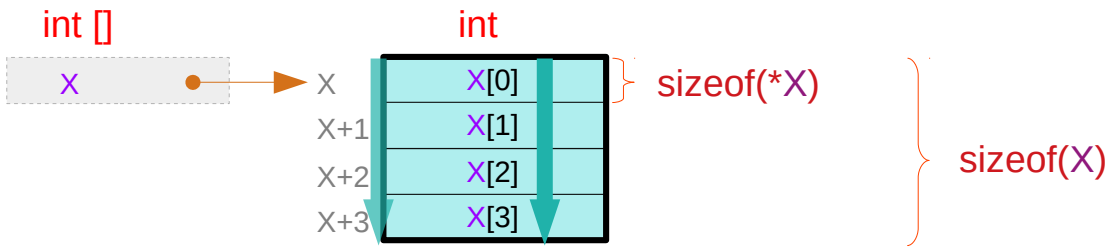

int X[4]; contiguous X[i] for a given X : **primitive types**

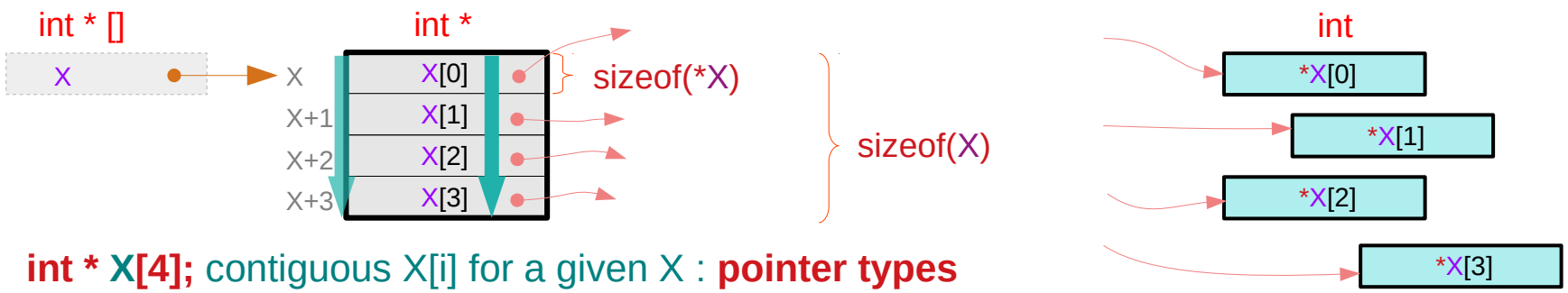

int * X[4]; contiguous X[i] for a given X : **pointer types**

Equivalence and contiguity (2)

consecutive address — consecutive data

*(X+n) ≡ X[n]

contiguous index : n

can be recursively applied

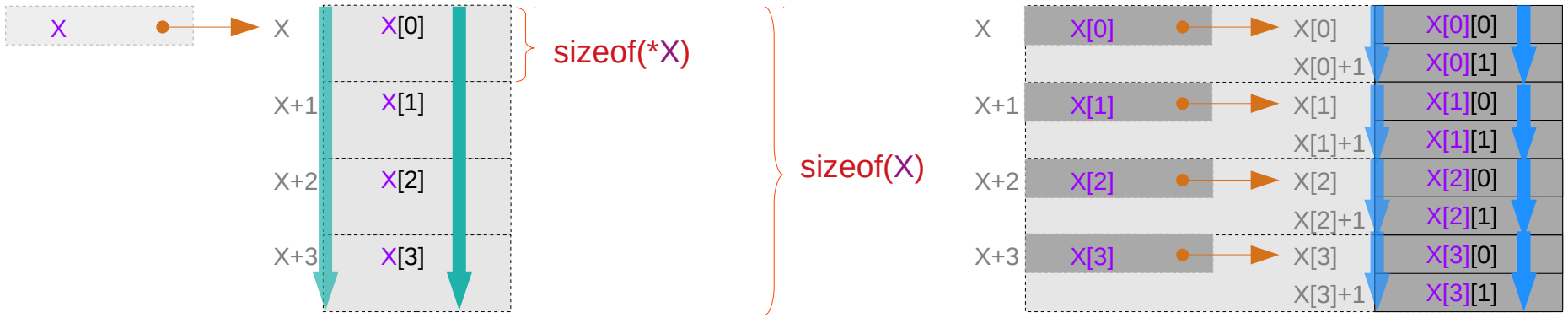

atype * X[4]; contiguous X[i] for a given X : **abstract data types**

Recursive applications of equivalences

By definition, contiguous memory locations are assumed

consecutive address consecutive data

*(X+n) ≡ X[n]

contiguous index : n

*(p[m]+n) ⟺ p[m][n]

X = p[m] contiguous index : **n**

(*(p+m))[n]; ⟺ p[m][n];

X = p contiguous index : **m**

Equivalence for a given p[m] (1)

*(p[m]+n) ⟷ p[m][n]

for a given p[m] contiguous index : **n**

int p[M][4]; contiguous p[m][n] for a given p[m] : **primitive types** m = 0, 1, …, M-1

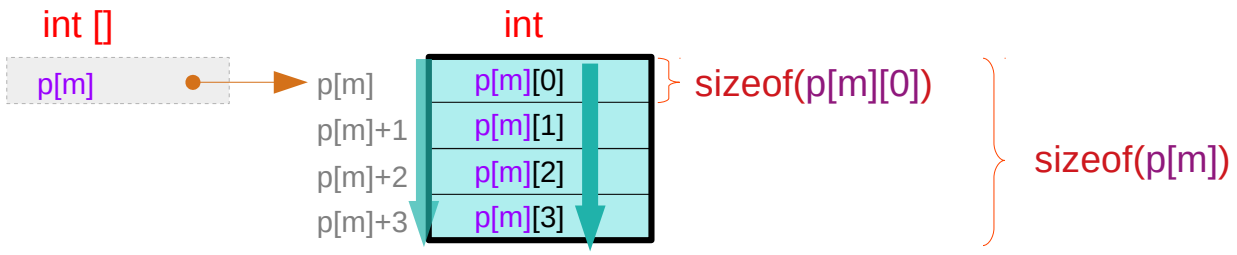

int * p[M][4]; contiguous p[m][n] for a given p[m] : **pointer types** m = 0, 1, …, M-1

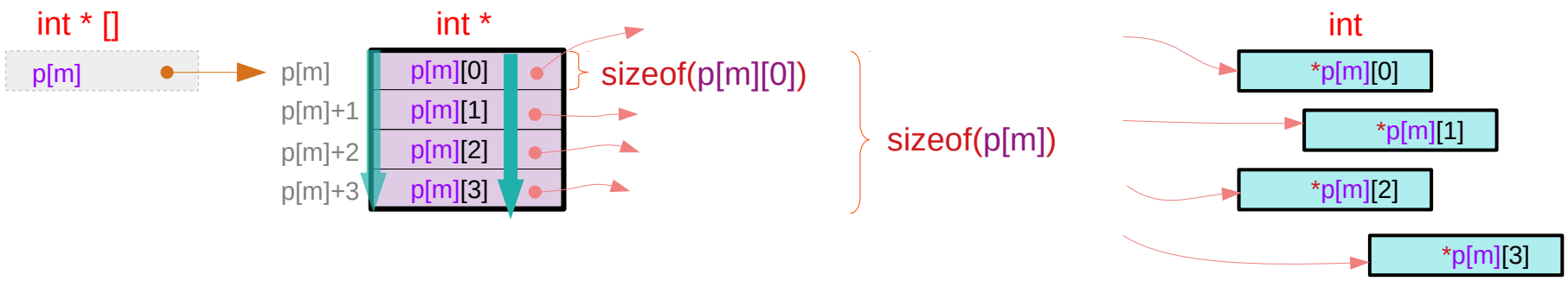

Equivalence for a given p[m] (2)

*(p[m]+n) ⟷ p[m][n]

for a given p[m] contiguous index : **n**

atype * p[M][4]; contiguous p[m][n] for a given p[m] : **abstract data types** m = 0, 1, …, M-1

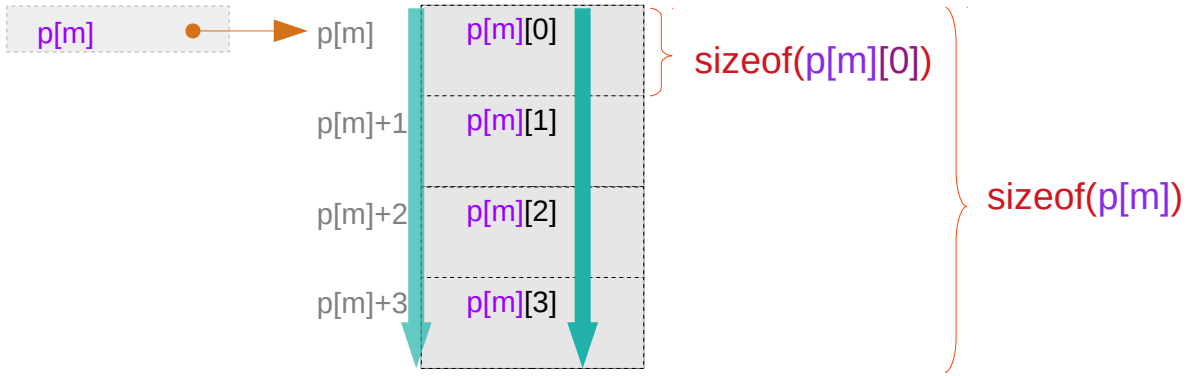

can be recursively applied

Equivalence for a given p[m][n]

*(p[m][n]+k) ⟷ p[m][n][k]

for a given p[m][n] contiguous index : **k**

atype * p[M][4][2]; contiguous p[m][n][k] for a given p[m][n] : **abstract data types** m = 0, 1, …, M-1

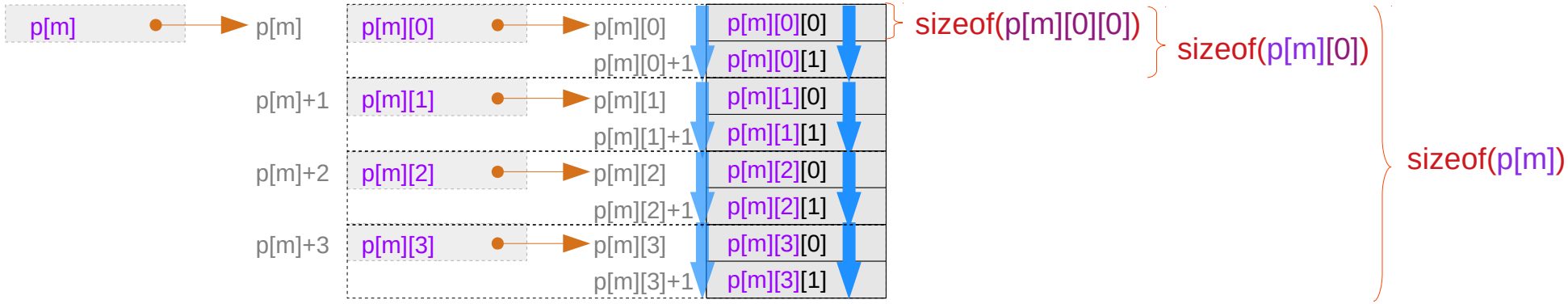

Contiguity constraints in multi-dimensional arrays

*(p[m]+n) ⟺ p[m][n]

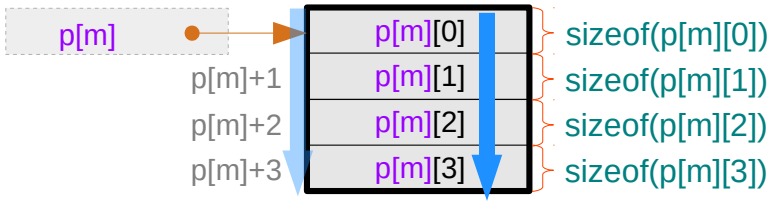

for a given p[m], thus for a given p and m,
p[m][n]'s must be contiguous for all n.
p[m][0], p[m][1], … , p[m][N-1]

contiguous index : n

*(p+m) ⟺ p[m]

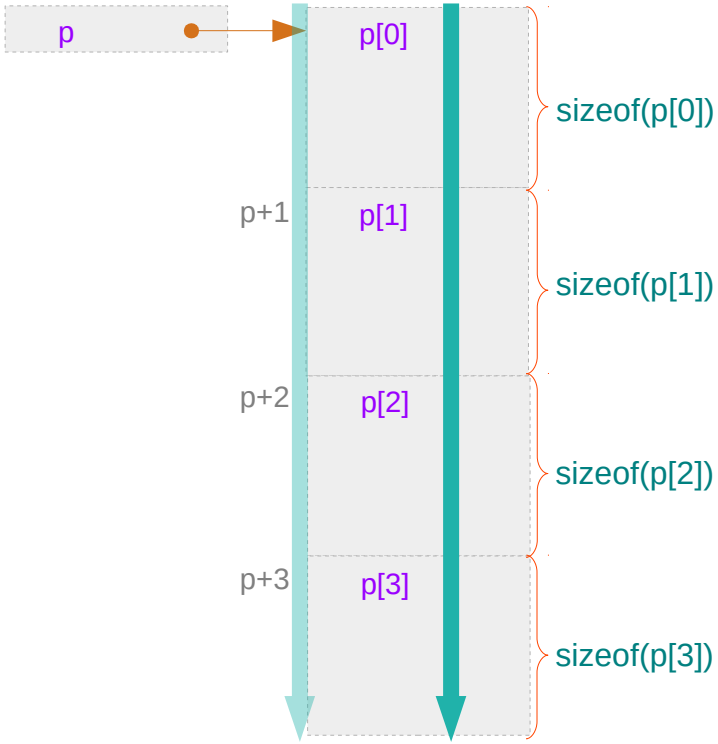

for a given p,
p[m]'s must be contiguous for all m.
p[0], p[1], … , p[M-1]

contiguous index : m

Contiguity constraints for p

*(p+m) ⟺ p[m]

for a given p

contiguous index : **m**

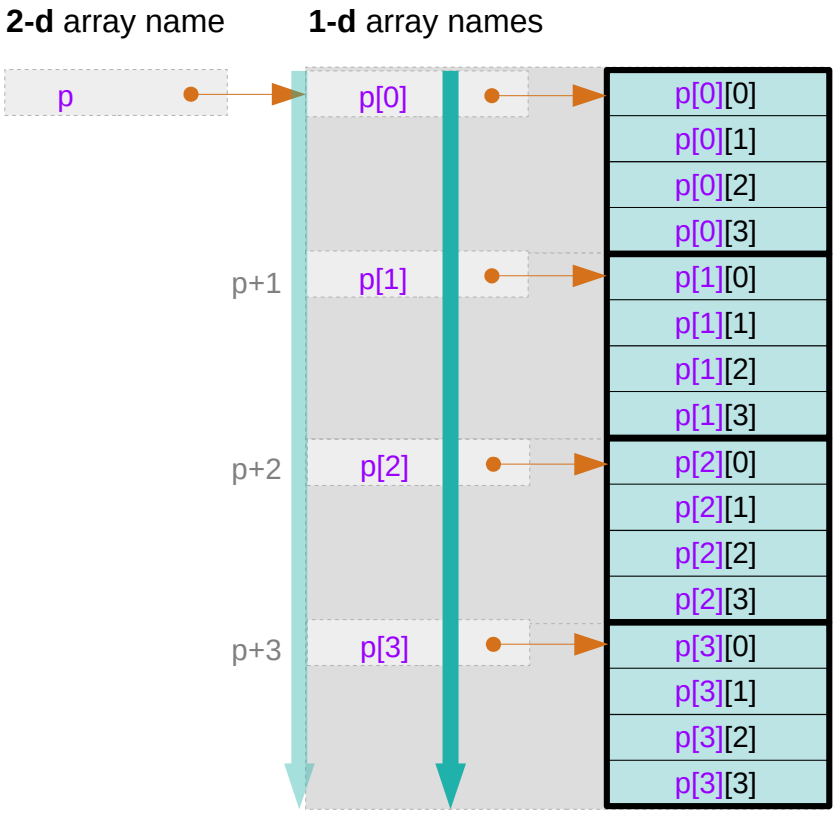

contiguous p[m] ➡ contiguous p[m][n]

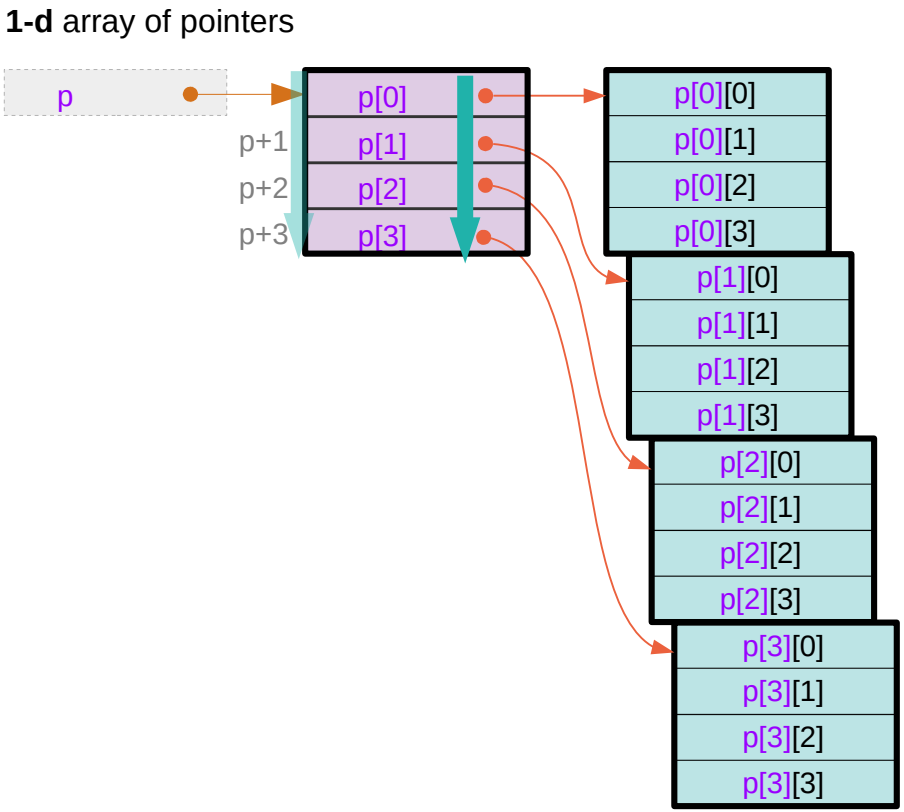

contiguous p[m] ➡ contiguous p[m][n]

Not necessarily

Contiguity constraints for p[m] – using array pointers

*(p[m]+n) ⟷ p[m][n]

for a given p[m] contiguous index : **n**

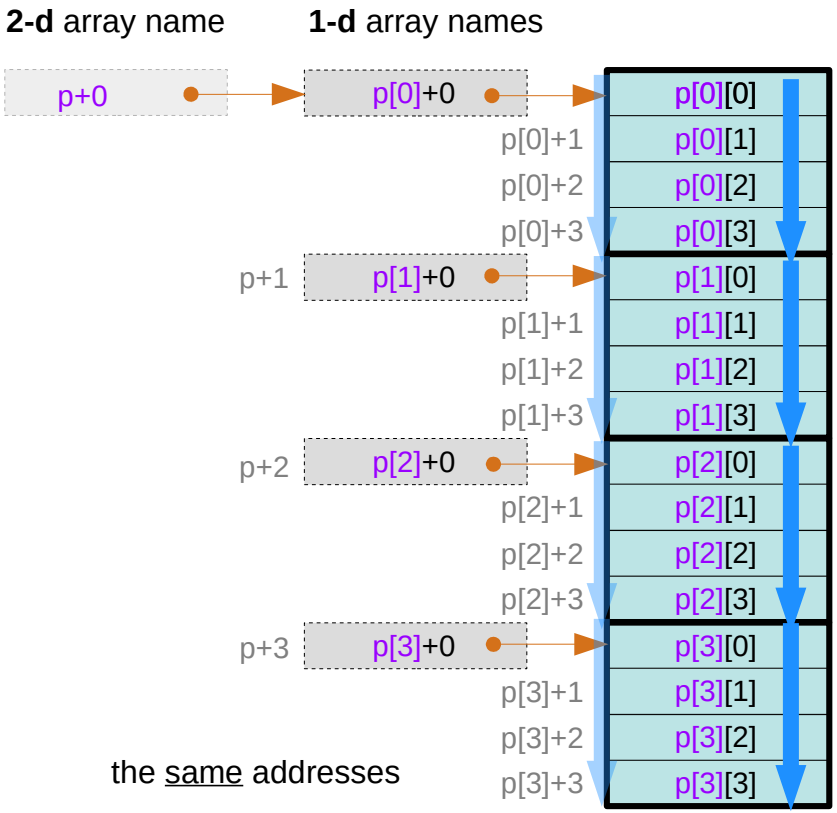

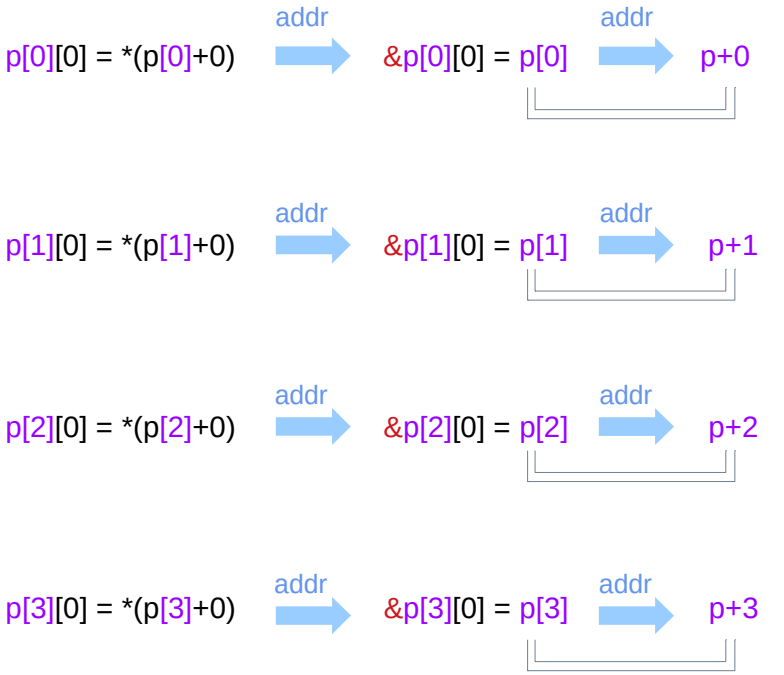

contiguous p[m] ➡ contiguous p[m][n]

virtual array pointer ⟷ no real memory locations

Contiguity constraints for p[m] – using pointer arrays

*(p[m]+n) ⟷ p[m][n]

for a given p[m] contiguous index : **n**

1-d array of pointers

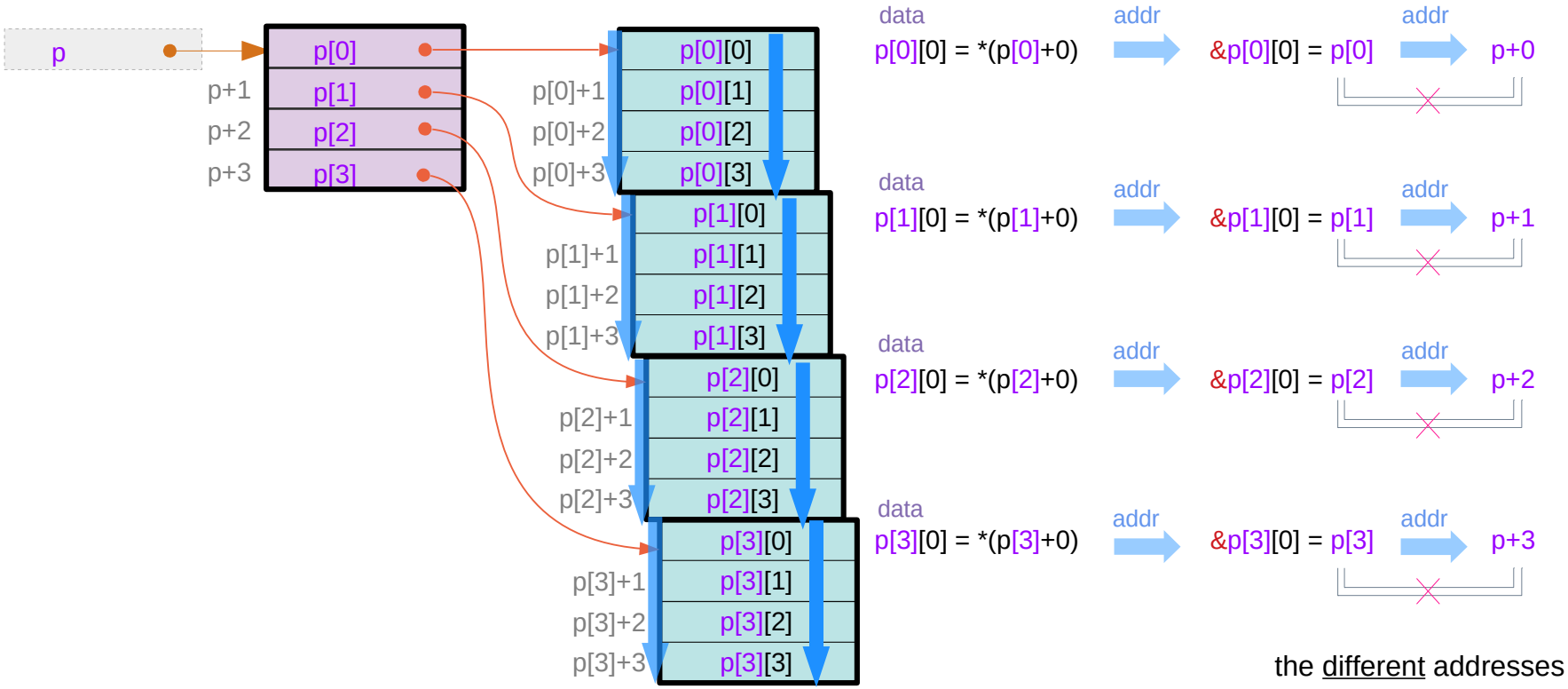

contiguous p[m] ➡ contiguous p[m][n]

Not necessarily

Contiguity constraints for 2-d arrays

int a[M][N] ;

*(a+m) ⟺ a[m]

a[0], a[1], … , a[M-1]
are contiguous

*(a[m]+n) ⟺ a[m][n]

a[m][0], a[m][1], … , a[m][N-1]
are contiguous

int (*b)[N] ;

*(b+m) ⟺ b[m]

b[0], b[1], … , b[M-1]
are contiguous

*(b[m]+n) ⟺ b[m][n]

b[m][0], b[m][1], … , b[m][N-1]
are contiguous

int * c[M] ;

*(c+m) ⟺ c[m]

c[0], c[1], … , c[M-1]
are contiguous

*(c[m]+n) ⟺ c[m][n]

c[m][0], c[m][1], … , c[m][N-1]
are contiguous

a set of <u>assignments</u> of pointers
are <u>necessary</u> for this contiguity

Pointer Arrays vs Array Pointers

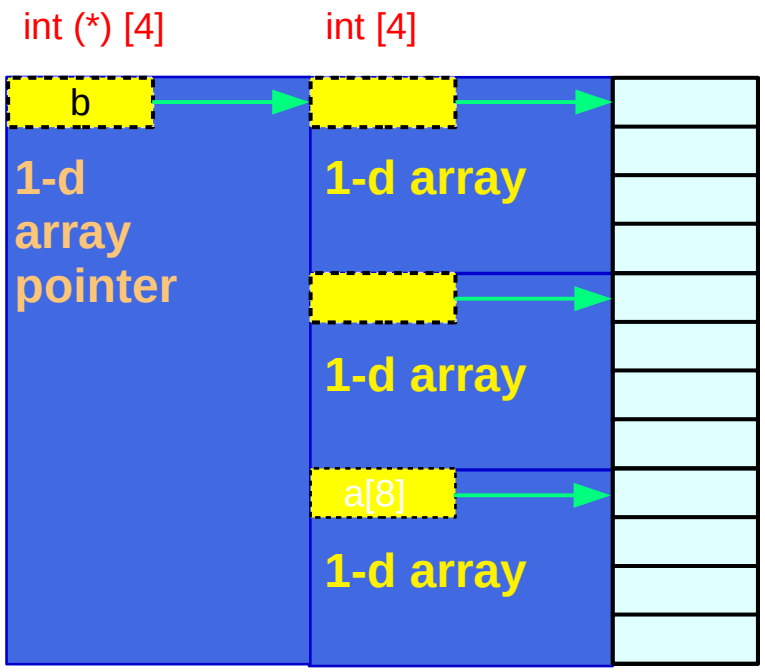

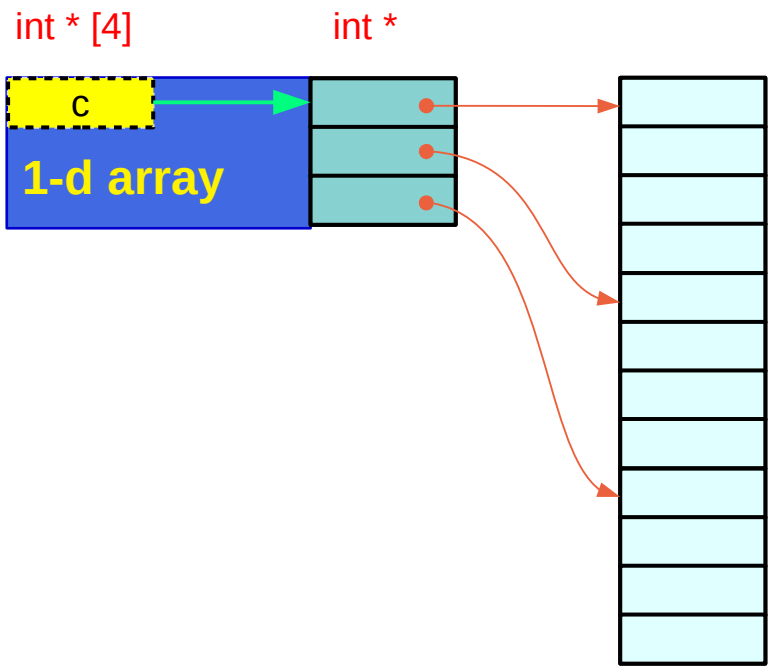

int (*b)[N] ;

int * c[M] ;

with proper assignments

*(b+m) ⟺ b[m]

*(b[m]+n) ⟺ b[m][n]

*(c+m) ⟺ c[m] or

*(c[m]+n) ⟺ c[m][n]

Pointer Arrays vs Array Pointers

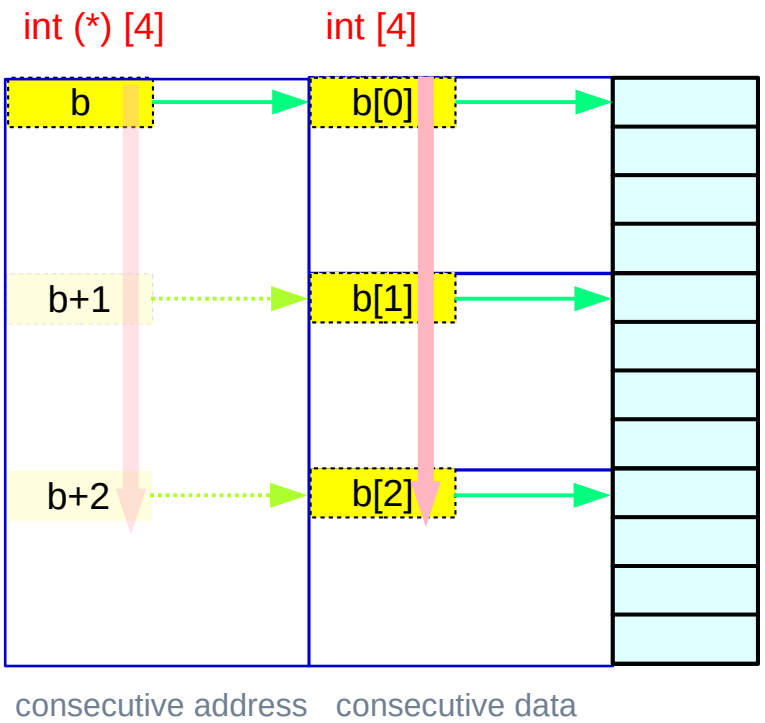

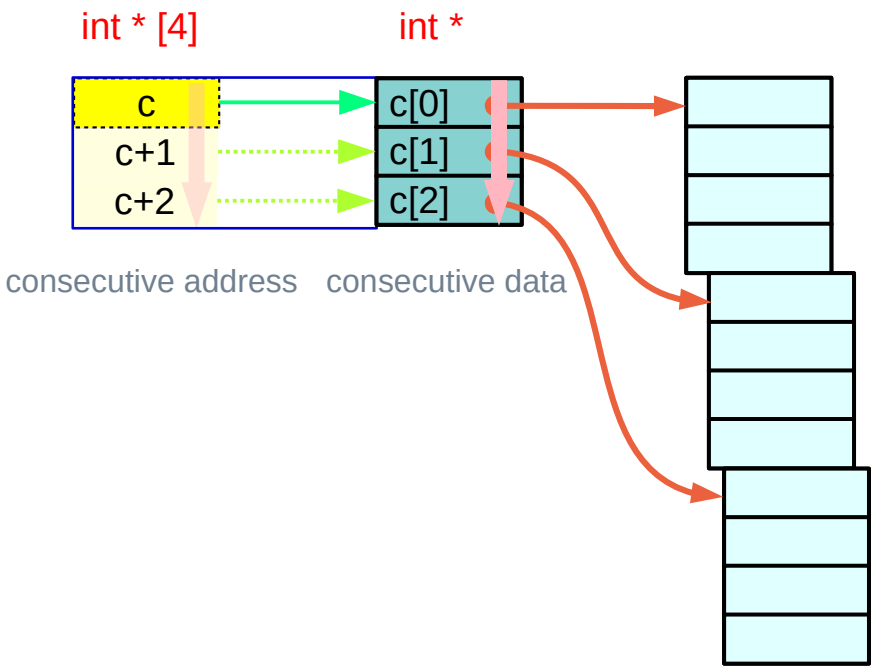

int (*b)[N] ;

int * c[M] ; with proper assignments

*(b+m) ⟺ b[m]
*(b[m]+n) ⟺ b[m][n]

*(c+m) ⟺ c[m] or
*(c[m]+n) ⟺ c[m][n]

Pointer Arrays vs Array Pointers

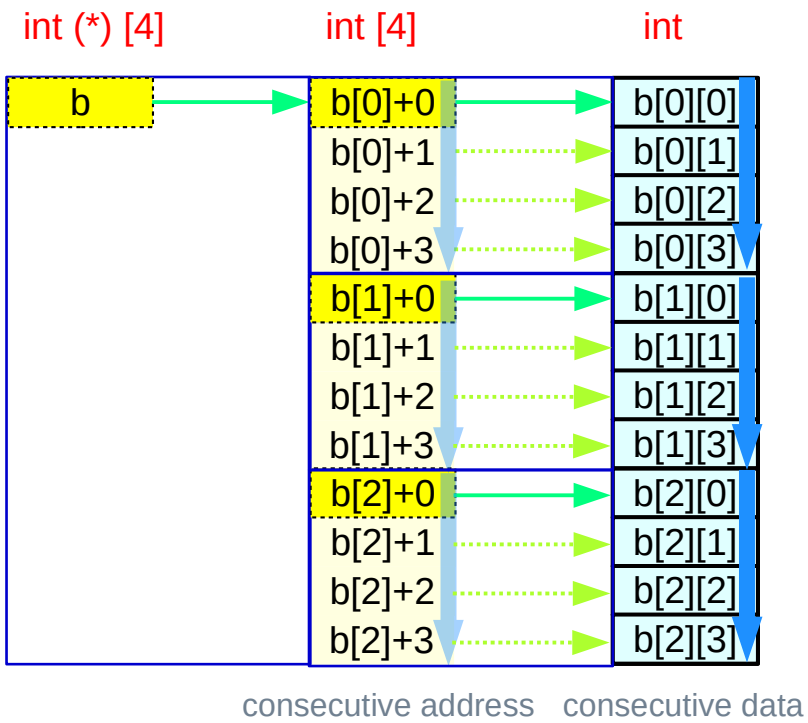

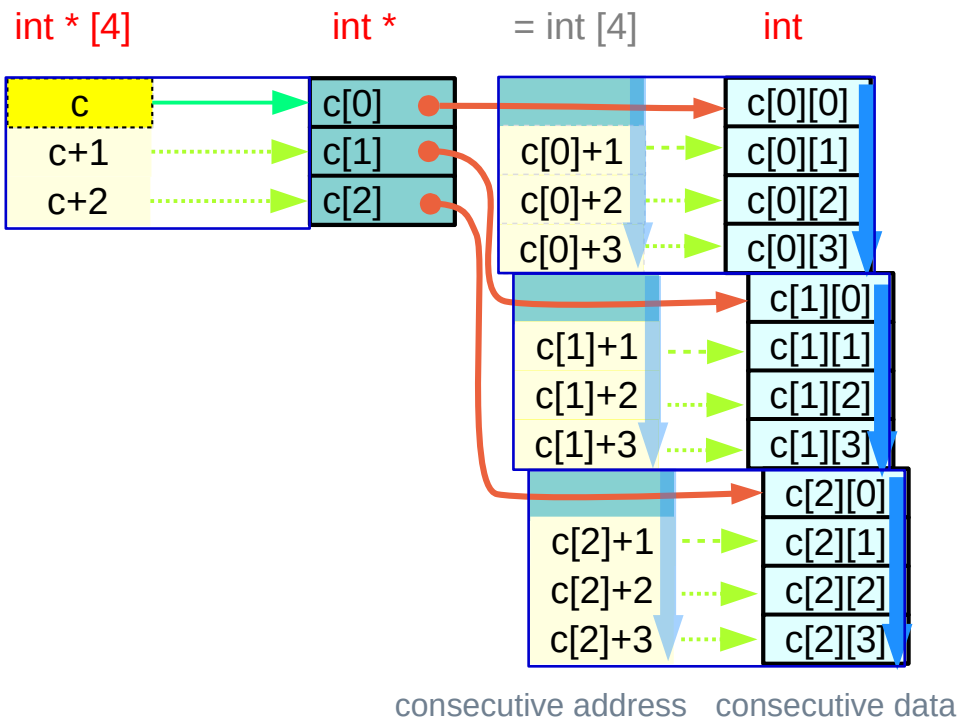

int (*b)[N] ;

int * c[M] ;

with proper assignments

*(b+m) ⟺ b[m]

*(b[m]+n) ⟺ b[m][n]

*(c+m) ⟺ c[m]

*(c[m]+n) ⟺ c[m][n]

Three contiguity constraints for 3-d arrays

Pointer Array Approach (array of pointers)

c[i][j][k]	➡	*(c[i][j] +k)
*(c[i][j] +k)	➡	*(*(c[i] +j) +k)
((c[i] +j) +k)	➡	*(*(*(c +i) +j) +k)

contiguous **int**	int
contiguous pointers to **int**	int *
contiguous double pointers to **int**	int **

the contiguity constraints are satisfied by allocating arrays of pointers

Array Pointer Approach (pointer to arrays)

c[i][j][k]	➡	*(c[i][j] +k)
*(c[i][j] +k)	➡	*(*(c[i] +j) +k)
((c[i] +j) +k)	➡	*(*(*(c +i) +j) +k)

contiguous **0-d** arrays	int	int
contiguous **1-d** arrays	int [4]	int *
contiguous **2-d** arrays	int [3][4]	int (*) [4]

The contiguity constraints are satisfied by row major ordered linear data layout

Contiguous array pointers c[i][j][k] ≡ *(c[i][j] +k)

c[0][0][0] = *(c[0][0] + 0)
c[0][0][1] = *(c[0][0] + 1)
c[0][0][2] = *(c[0][0] + 2)
c[0][0][3] = *(c[0][0] + 3)
c[0][1][0] = *(c[0][1] + 0)
c[0][1][1] = *(c[0][1] + 1)
c[0][1][2] = *(c[0][1] + 2)
c[0][1][3] = *(c[0][1] + 3)

⋮ ⋮

contiguous 1-d array elements

c[i][j]
int [4] **4** contiguous 0-d arrays
int * points to the 1st 0-d array
int 0-d array

sizeof(**c[i][j]**) [k]
sizeof(**c[i][j][k]**) * 4
sizeof(**int**) * 4

int c[2][3][4];

Address Value
c[i][j] + k
&c[i][j][0] + k * sizeof(*c[i][j])
&c[i][j][0] + k * sizeof(c[i][j][0])
&c[i][j][0] + k * 4

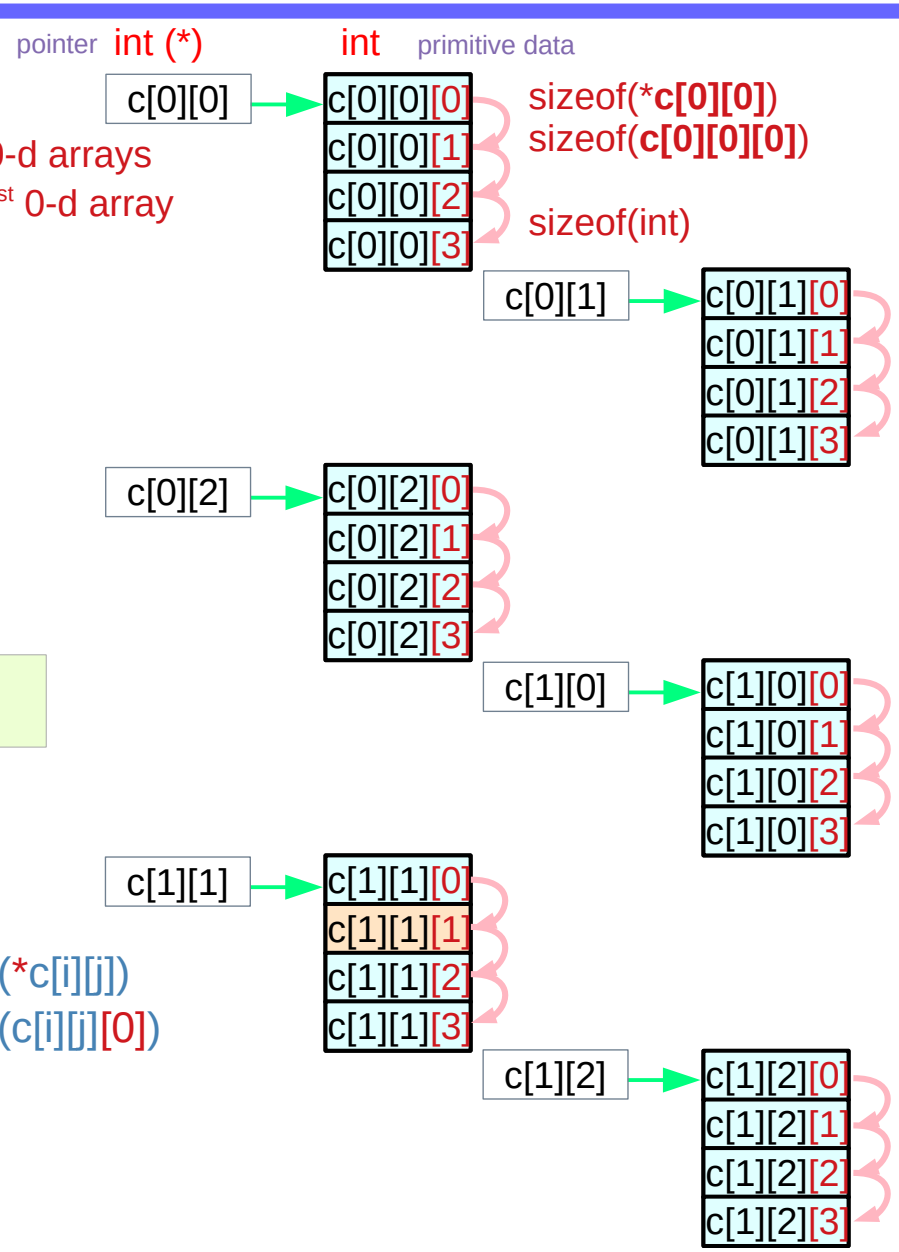

Contiguous array pointers c[i][j] ≡ *(c[i] +j)

c[0][0] = *(c[0] + 0)
c[0][1] = *(c[0] + 1)
c[0][2] = *(c[0] + 2)
c[1][0] = *(c[1] + 0)
c[1][1] = *(c[2] + 1)
c[1][2] = *(c[3] + 2)

c[i]
int [3][4] **3** contiguous 1-d arrays
int (*) [4] points to the 1st 1-d array
int [4] 1-d array

sizeof(**c[i]**) [j] [k]
sizeof(**c[i][j][k]**) * 3 * 4
sizeof(**int**) * 3 * 4

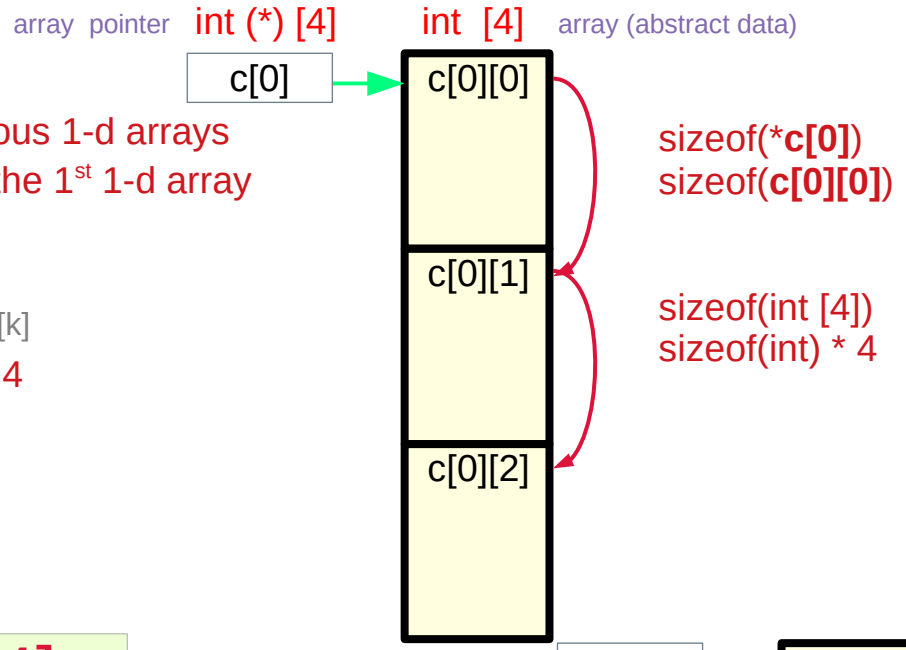

int c[2][3][4];

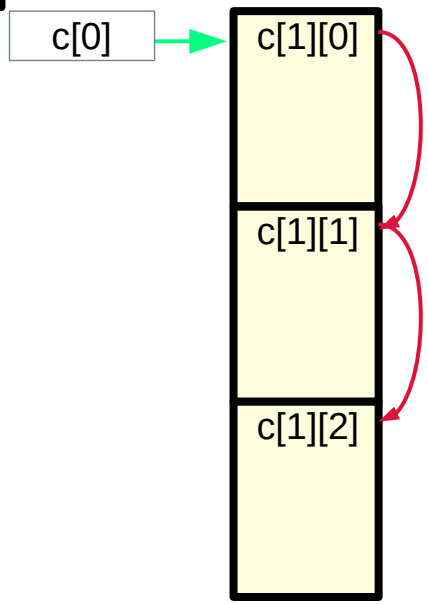

Address Value
c[i] + j
&c[i][0][0] + j * sizeof(*c[i])
&c[i][0][0] + j * sizeof(c[i][0])
&c[i][0][0] + j * 4 * 4

Contiguous array pointers c[i] ≡ *(c +i)

c[0] = *(c + 0)
c[1] = *(c + 1)

array pointer int (*) [3][4] int [3][4] array (abstract data)

c

c
int [2][3][4] **2** contiguous 2-d arrays
Int (*) [3][4] points to the 1st 2-d array
int [3][4] 2-d array

sizeof(**c**)
sizeof(**c[i][j][k]**) * 2 * 3 * 4
sizeof(**int**) * 2 * 3 * 4

[i] [j] [k]

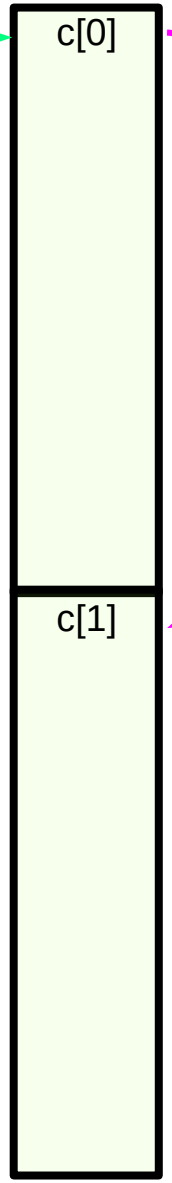

sizeof(***c**)
sizeof(**c[0]**)

sizeof(int [3][4])
sizeof(int) * 3 * 4

int c[2][3][4];

Address Value
c + i
&c[0][0][0] + i * sizeof(*c)
&c[0][0][0] + i * sizeof(c[0])
&c[0][0][0] + i * 4 * 3 * 4

Subarrays in a 3-d array

1-d subarrays

int [4]	int
c[0][0]	c[0][0][0]
	c[0][0][1]
	c[0][0][3]
c[0][1]	c[0][1][0]
	c[0][1][1]
	c[0][1][2]
	c[0][1][3]
c[0][2]	c[0][2][0]
	c[0][2][1]
	c[0][2][2]
	c[0][2][3]
c[1][0]	c[1][0][0]
	c[1][0][1]
	c[1][0][2]
	c[1][0][3]
c[1][1]	c[1][1][0]
	c[1][1][1]
	c[1][1][2]
	c[1][1][3]
c[1][2]	c[1][2][0]
	c[1][2][1]
	c[1][2][2]
	c[1][2][3]

2-d subarrays

int [3][4]	int [4]	int
c[0]	c[0][0]	c[0][0][0]
		c[0][0][1]
		c[0][0][2]
		c[0][0][3]
	c[0][1]	c[0][1][0]
		c[0][1][1]
		c[0][1][2]
		c[0][1][3]
	c[0][2]	c[0][2][0]
		c[0][2][1]
		c[0][2][2]
		c[0][2][3]
c[1]	c[1][0]	c[1][0][0]
		c[1][0][1]
		c[1][0][2]
		c[1][0][3]
	c[1][1]	c[1][1][0]
		c[1][1][1]
		c[1][1][2]
		c[1][1][3]
	c[1][2]	c[1][2][0]
		c[1][2][1]
		c[1][2][2]
		c[1][2][3]

3-d array

int [2][3][4]	int [3][4]	int [3]	int
c	c[0]	c[0][0]	c[0][0][0]
			c[0][0][1]
			c[0][0][2]
			c[0][0][3]
		c[0][1]	c[0][1][0]
			c[0][1][1]
			c[0][1][2]
			c[0][1][3]
		c[0][2]	c[0][2][0]
			c[0][2][1]
			c[0][2][2]
			c[0][2][3]
	c[1]	c[1][0]	c[1][0][0]
			c[1][0][1]
			c[1][0][2]
			c[1][0][3]
		c[1][1]	c[1][1][0]
			c[1][1][1]
			c[1][1][2]
			c[1][1][3]
		c[1][2]	c[1][2][0]
			c[1][2][1]
			c[1][2][2]
			c[1][2][3]

Contiguous linear layout

```
int    c [L][M][N];

       c [i][j][k];
```

L	M	N
i	**j**	**k**
i*M*N	**j*N**	**k**

Base Index = 0

Offset Index 1 (i=1)

Offset Index 2 (j=1)

Offset Index 3 (k=1)

i*M*N

j*N

k

(i*M*N **+ j***N **+ k)**

((i*M **+ j)***N **+ k)**

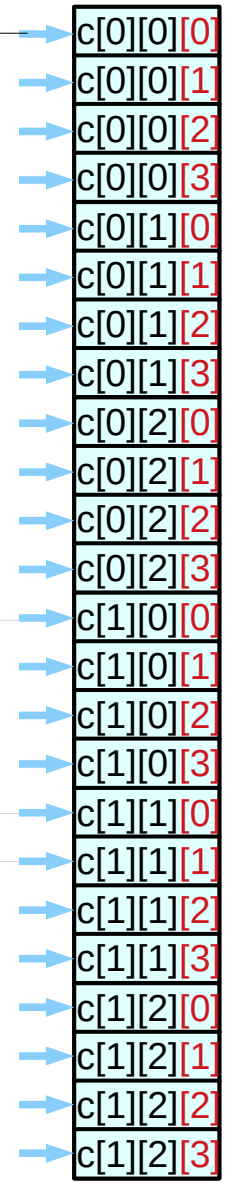

24=2*3*4

Base and Offset Addressing

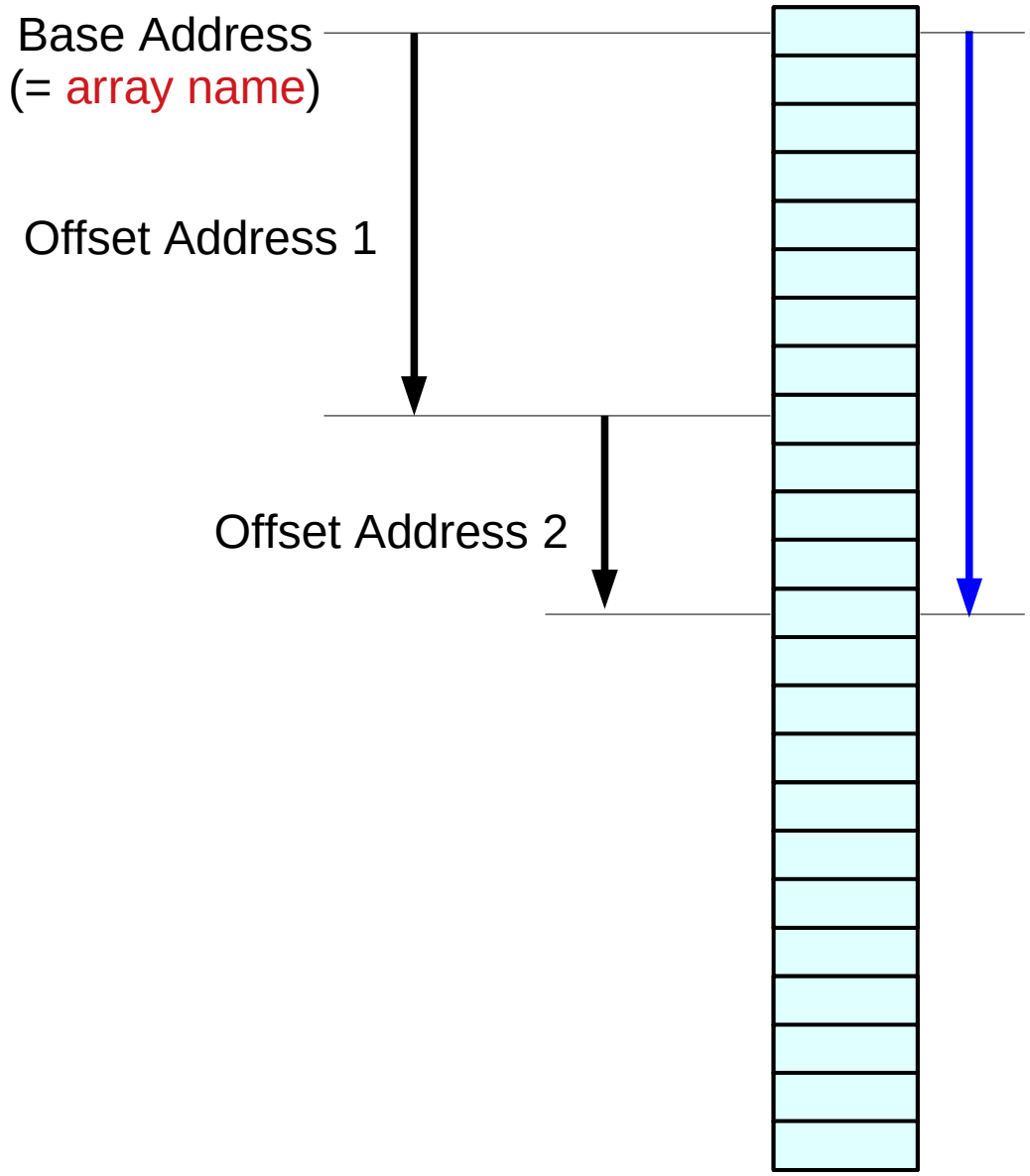

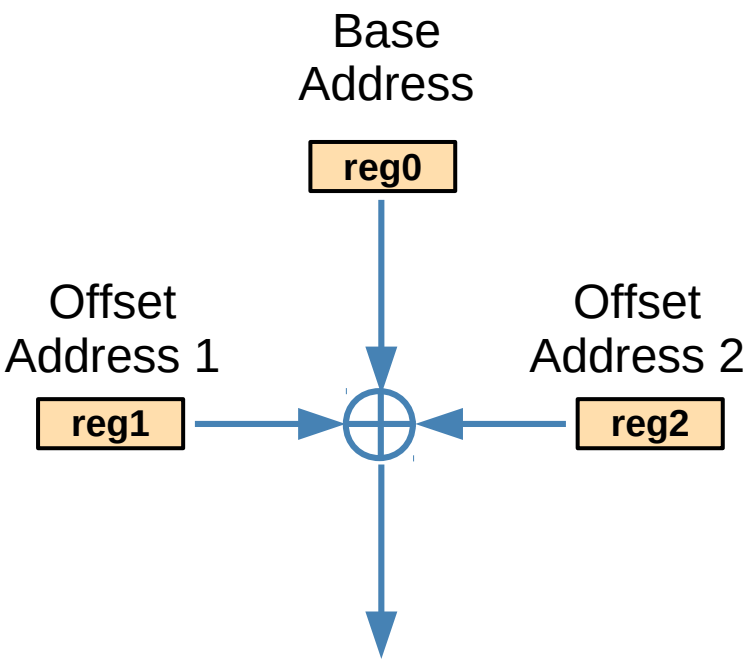

compiler
assembly instruction
registers in the CPU

Array Pointer Approach

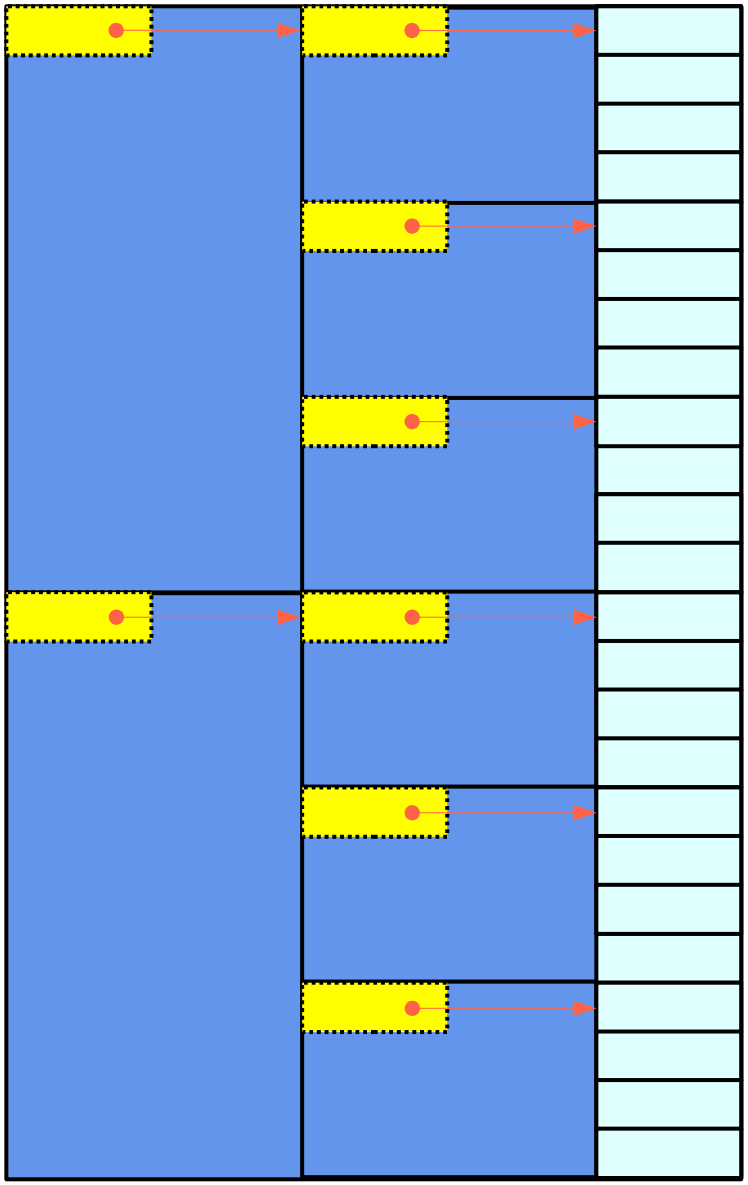

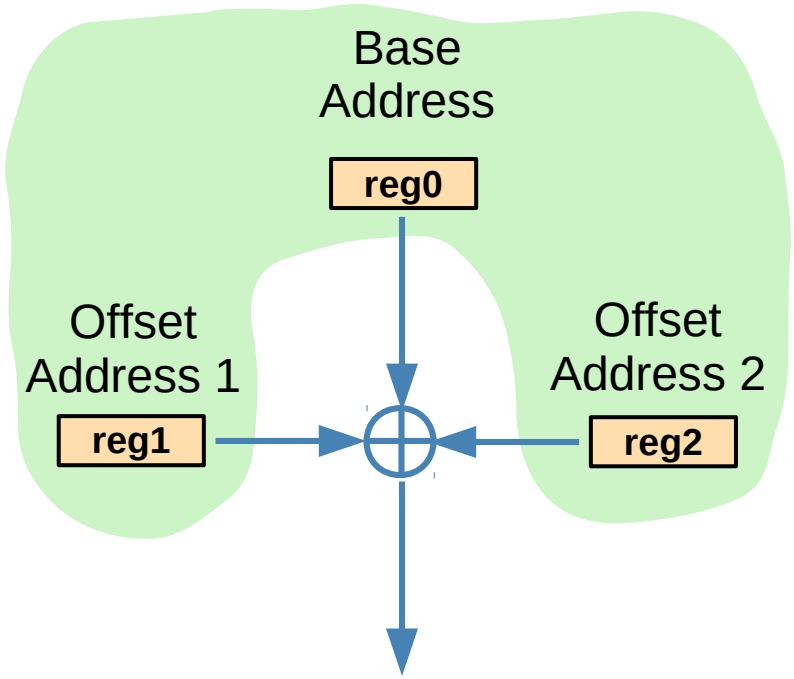

register based address **computations**
eliminate the pointer arrays – by a compiler

Array Pointer Approach
(pointer to arrays)

References

[1] Essential C, Nick Parlante
[2] Efficient C Programming, Mark A. Weiss
[3] C A Reference Manual, Samuel P. Harbison & Guy L. Steele Jr.
[4] C Language Express, I. K. Chun